GROUP TAB LOCATOR

	Introduction
0	Lubrication & Maintenance
2	Suspension
3	Differential & Driveline
5	Brakes
6	Clutch
7	Cooling
8A	Audio/Video
8B	Chime/Buzzer
8E	Electronic Control Modules
8F	Engine Systems
8G	Heated Systems
8H	Horn
8I	Ignition Control
8J	Instrument Cluster
8L	Lamps
8M	Message Systems
8N	Power Systems
8O	Restraints
8P	Speed Control
8Q	Vehicle Theft Security
8R	Wipers/Washers
8W	Wiring
9	Engine
11	Exhaust System
13	Frame & Bumpers
14	Fuel System
19	Steering
21	Transaxle
22	Tires/Wheels
23	Body
24	Heating & Air Conditioning
25	Emissions Control
	Component and System Index
	Service Manual Comment Forms (Rear of Manual)

INTRODUCTION

TABLE OF CONTENTS

page

BODY CODE PLATE
DESCRIPTION 1
FASTENER IDENTIFICATION
DESCRIPTION 2
FASTENER USAGE
DESCRIPTION
DESCRIPTION - FASTENER USAGE 5
DESCRIPTION - THREADED HOLE REPAIR . . 5
INTERNATIONAL SYMBOLS
DESCRIPTION 5
METRIC SYSTEM
DESCRIPTION 5
TORQUE REFERENCES
DESCRIPTION 8
VEHICLE IDENTIFICATION NUMBER
DESCRIPTION 9
VEHICLE SAFETY CERTIFICATION LABEL
DESCRIPTION 10
E-MARK LABEL
DESCRIPTION 10
VECI LABEL
DESCRIPTION 11
MANUFACTURER PLATE
DESCRIPTION 11

BODY CODE PLATE

DESCRIPTION

The Body Code Plate (Fig. 1) is located in the engine compartment on the driver side strut tower. There are seven lines of information on the body code plate. Lines 4, 5, 6, and 7 are not used to define service information. Information reads from left to right, starting with line 3 in the center of the plate to line 1 at the bottom of the plate.

BODY CODE PLATE LINE 2

DIGITS 1, 2, AND 3

Paint procedure

DIGIT 4

Open Space

DIGITS 5 THROUGH 7

Primary paint

(Refer to 23 - BODY/PAINT - SPECIFICATIONS) for Body Color Codes.

DIGIT 8 AND 9

Open Space

DIGITS 10 THROUGH 12

Secondary Paint

DIGIT 13 AND 14

Open Space

DIGITS 15 THROUGH 18

Interior Trim Code

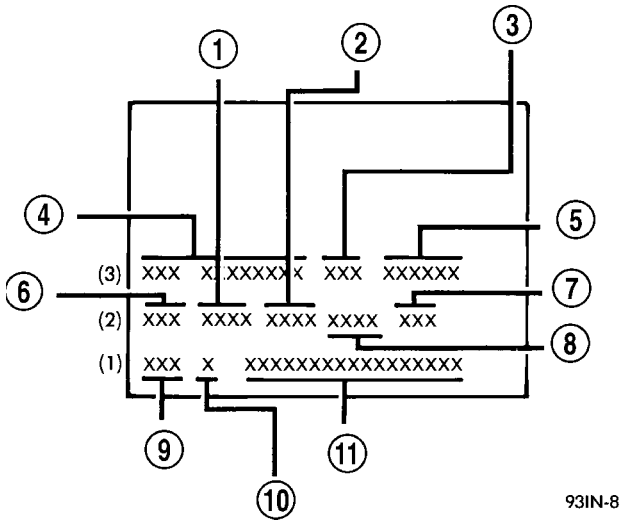

Fig. 1 BODY CODE PLATE

1 - PRIMARY PAINT
2 - SECONDARY PAINT
3 - VINYL ROOF
4 - VEHICLE ORDER NUMBER
5 - CAR LINE SHELL
6 - PAINT PROCEDURE
7 - ENGINE
8 - TRIM
9 - TRANSMISSION
10 - MARKET
11 - VIN

DIGIT 19

Open Space

DIGITS 20, 21, AND 22

Engine Code

- ECC = 2.0L Four Cylinder 16 Valves DOHC Gasoline

BODY CODE PLATE (Continued)

- EDV = 2.4L Four Cylinder 16 Valves DOHC Gasoline TURBO
- EDZ = 2.4L Four Cylinder 16 Valves DOHC Gasoline
- EEE = 2.7L Six Cylinder 24 Valves FFV
- EER = 2.7L Six Cylinder 24 Valves DOHC Gasoline

DIGIT 23

Open Space

BODY CODE PLATE LINE 1

DIGITS 1, 2, AND 3

Transaxle Codes

- DGL = 41TE 4-Speed Electronic Automatic Transaxle
- DD5 = NV T350 5-Speed Manual Transaxle
- DDR = NV T850 5-Speed Manual Transaxle

DIGIT 4

Open Space

DIGIT 5

Market Code

- C = Canada
- B = International
- M = Mexico
- U = United States

DIGIT 6

Open Space

DIGITS 7 THROUGH 23

Vehicle Identification Number

- Refer to Vehicle Identification Number (VIN) paragraph for proper breakdown of VIN code.

IF TWO BODY CODE PLATES ARE REQUIRED

The last code shown on either plate will be followed by END. When two plates are required, the last code space on the first plate will indicate (CTD)

When a second plate is required, the first four spaces of each line will not be used due to overlap of the plates.

FASTENER IDENTIFICATION

DESCRIPTION

The SAE bolt strength grades range from grade 2 to grade 8. The higher the grade number, the greater the bolt strength. Identification is determined by the line marks on the top of each bolt head. The actual bolt strength grade corresponds to the number of line marks plus 2. The most commonly used metric bolt strength classes are 9.8 and 10.9. The metric strength class identification number is imprinted on the head of the bolt. The higher the class number, the greater the bolt strength. Some metric nuts are imprinted with a single-digit strength class on the nut face. Refer to the Fastener Identification and Fastener Strength Charts (Fig. 2) and (Fig. 3).

FASTENER IDENTIFICATION (Continued)

Bolt Markings and Torque - Metric

Commercial Steel Class

Bolt Head Markings

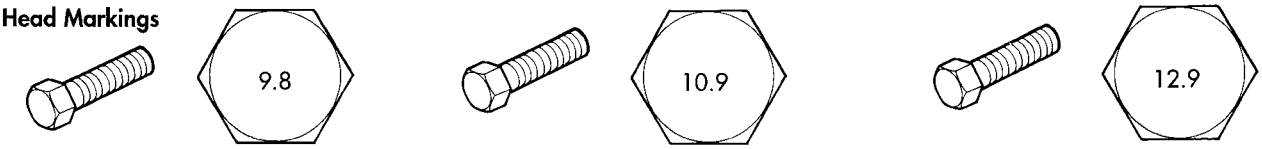

Body Size	9.8 Torque				10.9 Torque				12.9 Torque			
Diam.	Cast Iron		Aluminum		Cast Iron		Aluminum		Cast Iron		Aluminum	
mm	N•m	ft-lb	N•m	ft-lb	N•m	ft-lb	N•m	ft-lb	N•m	ft-lb	N•m	ft-lb
6	9	5	7	4	14	9	11	7	14	9	11	7
7	14	9	11	7	18	14	14	11	23	18	18	14
8	25	18	18	14	32	23	25	18	36	27	28	21
10	40	30	30	25	60	45	45	35	70	50	55	40
12	70	55	55	40	105	75	80	60	125	95	100	75
14	115	85	90	65	160	120	125	95	195	145	150	110
16	180	130	140	100	240	175	190	135	290	210	220	165
18	230	170	180	135	320	240	250	185	400	290	310	230

Bolt Markings and Torque Values - U.S. Customary

SAE Grade Number 5 8

Bolt Head Markings
These are all SAE Grade 5 (3) line

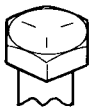

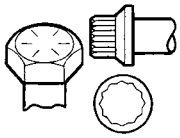

Body Size	Bolt Torque - Grade 5 Bolt: Cast Iron		Aluminum		Bolt Torque - Grade 8 Bolt: Cast Iron		Aluminum	
	N•m	ft-lb	N•m	ft-lb	N•m	ft-lb	N•m	ft-lb
1/4 - 20	9	7	8	6	15	11	12	9
- 28	12	9	9	7	18	13	14	10
5/16 - 18	20	15	16	12	30	22	24	18
- 24	23	17	19	14	33	24	25	19
3/8 - 16	40	30	25	20	55	40	40	30
- 24	40	30	35	25	60	45	45	35
7/16 - 14	60	45	45	35	90	65	65	50
- 20	65	50	55	40	95	70	75	55
1/2 - 13	95	70	75	55	130	95	100	75
- 20	100	75	80	60	150	110	120	90
9/16 - 12	135	100	110	80	190	140	150	110
- 18	150	110	115	85	210	155	170	125
5/8 - 11	180	135	150	110	255	190	205	150
- 18	210	155	160	120	290	215	230	170
3/4 - 10	325	240	255	190	460	340	365	270
- 16	365	270	285	210	515	380	410	300
7/8 - 9	490	360	380	280	745	550	600	440
- 14	530	390	420	310	825	610	660	490
1 - 8	720	530	570	420	1100	820	890	660
- 14	800	590	650	480	1200	890	960	710

80bdbd8c

Fig. 2 FASTENER IDENTIFICATION

FASTENER IDENTIFICATION (Continued)

HOW TO DETERMINE BOLT STRENGTH

	Mark	Class
Hexagon head bolt	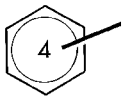 Bolt head No. 4 — 5 — 6 — 7 — 8 — 9 — 10 — 11 —	4T 5T 6T 7T 8T 9T 10T 11T
	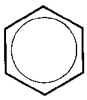 No mark	4T
Hexagon flange bolt w/washer hexagon bolt	No mark	4T
Hexagon head bolt	Two protruding lines	5T
Hexagon flange bolt w/washer hexagon bolt	Two protruding lines	6T
Hexagon head bolt	Three protruding lines	7T
Hexagon head bolt	Four protruding lines	8T

	Mark	Class
Stud bolt	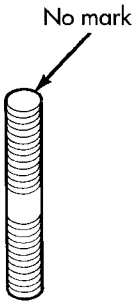	4T
	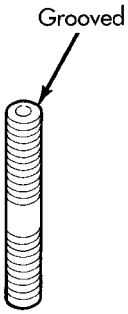	6T
Welded bolt	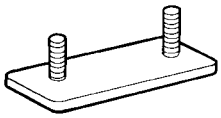	4T

95IN-4

Fig. 3 FASTENER STRENGTH

FASTENER USAGE

DESCRIPTION

DESCRIPTION - FASTENER USAGE

WARNING: USE OF AN INCORRECT FASTENER MAY RESULT IN COMPONENT DAMAGE OR PERSONAL INJURY.

Fasteners and torque specifications references in this Service Manual are identified in metric and SAE format.

During any maintenance or repair procedures, it is important to salvage all fasteners (nuts, bolts, etc.) for reassembly. If the fastener is not salvageable, a fastener of equivalent specification must be used.

DESCRIPTION - THREADED HOLE REPAIR

Most stripped threaded holes can be repaired using a Helicoil®. Follow the vehicle or Helicoil® recommendations for application and repair procedures.

INTERNATIONAL SYMBOLS

DESCRIPTION

The graphic symbols illustrated in the following International Control and Display Symbols Chart (Fig. 4) are used to identify various instrument controls. The symbols correspond to the controls and displays that are located on the instrument panel.

METRIC SYSTEM

DESCRIPTION

The metric system is based on quantities of one, ten, one hundred, one thousand and one million.

The following chart will assist in converting metric units to equivalent English and SAE units, or vise versa.

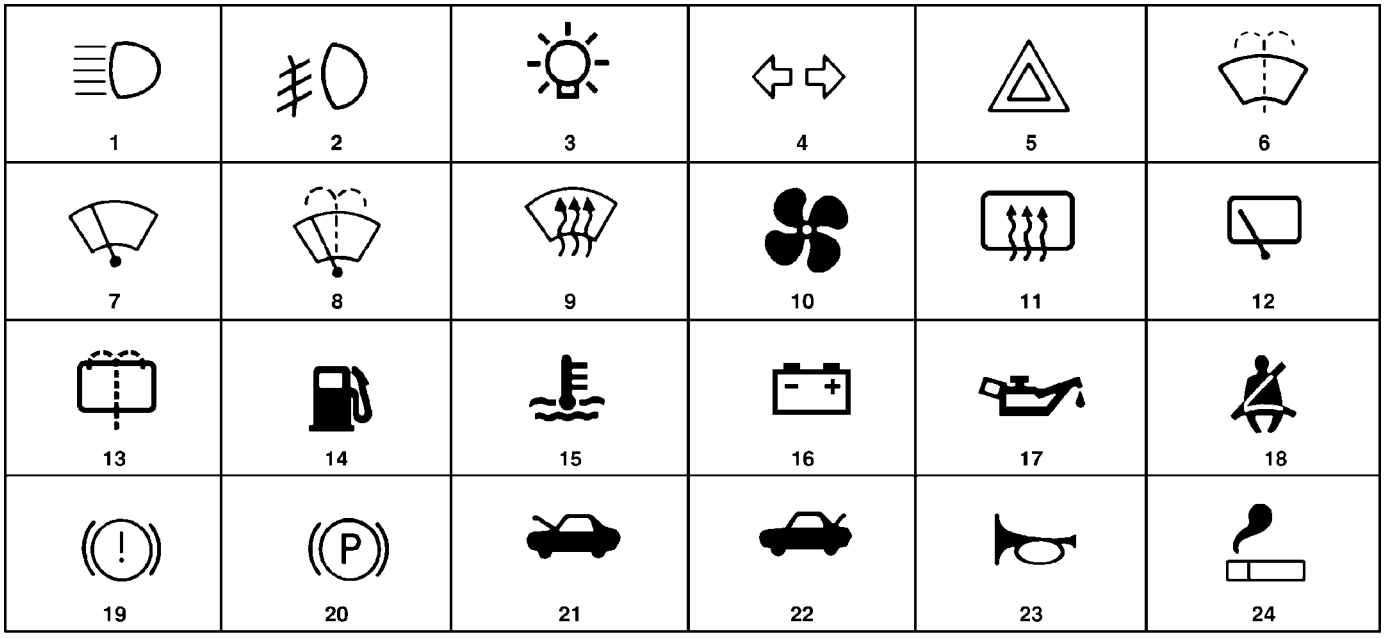

Fig. 4 INTERNATIONAL CONTROL AND DISPLAY SYMBOLS

1	High Beam	13	Rear Window Washer
2	Fog Lamps	14	Fuel
3	Headlamp, Parking Lamps, Panel Lamps	15	Engine Coolant Temperature
4	Turn Warning	16	Battery Charging Condition
5	Hazard Warning	17	Engine Oil
6	Windshield Washer	18	Seat Belt
7	Windshield Wiper	19	Brake Failure
8	Windshield Wiper and Washer	20	Parking Brake
9	Windscreen Demisting and Defrosting	21	Front Hood
10	Ventilating Fan	22	Rear hood (Decklid)
11	Rear Window Defogger	23	Horn
12	Rear Window Wiper	24	Lighter

METRIC SYSTEM (Continued)

CONVERSION FORMULAS AND EQUIVALENT VALUES

MULTIPLY	BY	TO GET	MULTIPLY	BY	TO GET
in-lbs	x 0.11298	= Newton Meters (N·m)	N·m	x 8.851	= in-lbs
ft-lbs	x 1.3558	= Newton Meters (N·m)	N·m	x 0.7376	= ft-lbs
Inches Hg (60° F)	x 3.377	= Kilopascals (kPa)	kPa	x 0.2961	= Inches Hg
psi	x 6.895	= Kilopascals (kPa)	kPa	x 0.145	= psi
Inches	x 25.4	= Millimeters (mm)	mm	x 0.03937	= Inches
Feet	x 0.3048	= Meters (M)	M	x 3.281	= Feet
Yards	x 0.9144	= Meters	M	x 1.0936	= Yards
mph	x 1.6093	= Kilometers/Hr. (Km/h)	Km/h	x 0.6214	= mph
Feet/Sec	x 0.3048	= Meters/Sec (M/S)	M/S	x 3.281	= Feet/Sec
mph	x 0.4470	= Meters/Sec (M/S)	M/S	x 2.237	= mph
Kilometers/Hr. (Km/h)	x 0.27778	= Meters/Sec (M/S)	M/S	x 3.600	Kilometers/Hr. (Km/h)

COMMON METRIC EQUIVALENTS

1 inch = 25 Millimeters	1 Cubic Inch = 16 Cubic Centimeters
1 Foot = 0.3 Meter	1 Cubic Foot = 0.03 Cubic Meter
1 Yard = 0.9 Meter	1 Cubic Yard = 0.8 Cubic Meter
1 Mile = 1.6 Kilometers	

Refer to the Metric Conversion Chart to convert torque values listed in metric Newton- meters (N·m). Also, use the chart to convert between millimeters (mm) and inches (in.) (Fig. 5).

METRIC SYSTEM (Continued)

in-lbs to N•m

in- lb	N•m	in-lb	N•m	in-lb	N•m	in-lb	N•m	in-lb	N•m
2	.2260	42	4.7453	82	9.2646	122	13.7839	162	18.3032
4	.4519	44	4.9713	84	9.4906	124	14.0099	164	18.5292
6	.6779	46	5.1972	86	9.7165	126	14.2359	166	18.7552
8	.9039	48	5.4232	88	9.9425	128	14.4618	168	18.9811
10	1.1298	50	5.6492	90	10.1685	130	14.6878	170	19.2071
12	1.3558	52	5.8751	92	10.3944	132	14.9138	172	19.4331
14	1.5818	54	6.1011	94	10.6204	134	15.1397	174	19.6590
16	1.8077	56	6.3270	96	10.8464	136	15.3657	176	19.8850
18	2.0337	58	6.5530	98	11.0723	138	15.5917	178	20.1110
20	2.2597	60	6.7790	100	11.2983	140	15.8176	180	20.3369
22	2.4856	62	7.0049	102	11.5243	142	16.0436	182	20.5629
24	2.7116	64	7.2309	104	11.7502	144	16.2696	184	20.7889
26	2.9376	66	7.4569	106	11.9762	146	16.4955	186	21.0148
28	3.1635	68	7.6828	108	12.2022	148	16.7215	188	21.2408
30	3.3895	70	7.9088	110	12.4281	150	16.9475	190	21.4668
32	3.6155	72	8.1348	112	12.6541	152	17.1734	192	21.6927
34	3.8414	74	8.3607	114	12.8801	154	17.3994	194	21.9187
36	4.0674	76	8.5867	116	13.1060	156	17.6253	196	22.1447
38	4.2934	78	8.8127	118	13.3320	158	17.8513	198	22.3706
40	4.5193	80	9.0386	120	13.5580	160	18.0773	200	22.5966

N•m to in-lbs

N•m	in-lb	N•m	in-lb	N•m	in-lb	N•m	in-lb	N•m	in-lb
.2	1.7702	4.2	37.1747	8.2	72.5792	12.2	107.9837	16.2	143.3882
.4	3.5404	4.4	38.9449	8.4	74.3494	12.4	109.7539	16.4	145.1584
.6	5.3107	4.6	40.7152	8.6	76.1197	12.6	111.5242	16.6	146.9287
.8	7.0809	4.8	42.4854	8.8	77.8899	12.8	113.2944	16.8	148.6989
1	8.8511	5	44.2556	9	79.6601	13	115.0646	17	150.4691
1.2	10.6213	5.2	46.0258	9.2	81.4303	13.2	116.8348	17.2	152.2393
1.4	12.3916	5.4	47.7961	9.4	83.2006	13.4	118.6051	17.4	154.0096
1.6	14.1618	5.6	49.5663	9.6	84.9708	13.6	120.3753	17.6	155.7798
1.8	15.9320	5.8	51.3365	9.8	86.7410	13.8	122.1455	17.8	157.5500
2	17.7022	6	53.1067	10	88.5112	14	123.9157	18	159.3202
2.2	19.4725	6.2	54.8770	10.2	90.2815	14.2	125.6860	18.5	163.7458
2.4	21.2427	6.4	56.6472	10.4	92.0517	14.4	127.4562	19	168.1714
2.6	23.0129	6.6	58.4174	10.6	93.8219	14.6	129.2264	19.5	172.5970
2.8	24.7831	6.8	60.1876	10.8	95.5921	14.8	130.9966	20	177.0225
3	26.5534	7	61.9579	11	97.3624	15	132.7669	20.5	181.4480
3.2	28.3236	7.2	63.7281	11.2	99.1326	15.2	134.5371	21	185.8736
3.4	30.0938	7.4	65.4983	11.4	100.9028	15.4	136.3073	22	194.7247
3.6	31.8640	7.6	67.2685	11.6	102.6730	15.6	138.0775	23	203.5759
3.8	33.6342	7.8	69.0388	11.8	104.4433	15.8	139.8478	24	212.4270
4	35.4045	8	70.8090	12	106.2135	16	141.6180	25	221.2781

ft-lbs to N•m

ft-lb	N•m	ft-lb	N•m	ft-lb	N•m	ft-lb	N•m	ft-lb	N•m
1	1.3558	21	28.4722	41	55.5885	61	82.7049	81	109.8212
2	2.7116	22	29.8280	42	56.9444	62	84.0607	82	111.1770
3	4.0675	23	31.1838	43	58.3002	63	85.4165	83	112.5328
4	5.4233	24	32.5396	44	59.6560	64	86.7723	84	113.8888
5	6.7791	25	33.8954	45	61.0118	65	88.1281	85	115.2446
6	8.1349	26	35.2513	46	62.3676	66	89.4840	86	116.6004
7	9.4907	27	36.6071	47	63.7234	67	90.8398	87	117.9562
8	10.8465	28	37.9629	48	65.0793	68	92.1956	88	119.3120
9	12.2024	29	39.3187	49	66.4351	69	93.5514	89	120.6678
10	13.5582	30	40.6745	50	67.7909	70	94.9073	90	122.0236
11	14.9140	31	42.0304	51	69.1467	71	96.2631	91	123.3794
12	16.2698	32	43.3862	52	70.5025	72	97.6189	92	124.7352
13	17.6256	33	44.7420	53	71.8583	73	98.9747	93	126.0910
14	18.9815	34	46.0978	54	73.2142	74	100.3316	94	127.4468
15	20.3373	35	47.4536	55	74.5700	75	101.6862	95	128.8026
16	21.6931	36	48.8094	56	75.9258	76	103.0422	96	130.1586
17	23.0489	37	50.1653	57	77.2816	77	104.3980	97	131.5144
18	24.4047	38	51.5211	58	78.6374	78	105.7538	98	132.8702
19	25.7605	39	52.8769	59	79.9933	79	107.1196	99	134.2260
20	27.1164	40	54.2327	60	81.3491	80	108.4654	100	135.5820

N•m to ft-lbs

N•m	ft-lb	N•m	ft-lb	N•m	ft-lb	N•m	ft-lb	N•m	ft-lb
1	.7376	21	15.9888	41	30.2400	61	44.9913	81	59.7425
2	1.4751	22	16.2264	42	30.9776	62	45.7289	82	60.4801
3	2.2127	23	16.9639	43	31.7152	63	46.4664	83	61.2177
4	2.9502	24	17.7015	44	32.4527	64	47.2040	84	61.9552
5	3.6878	25	18.4391	45	33.1903	65	47.9415	85	62.6928
6	4.4254	26	19.1766	46	33.9279	66	48.6791	86	63.4303
7	5.1629	27	19.9142	47	34.6654	67	49.4167	87	64.1679
8	5.9005	28	20.6517	48	35.4030	68	50.1542	88	64.9545
9	6.6381	29	21.3893	49	36.1405	69	50.8918	89	65.6430
10	7.3756	30	22.1269	50	36.8781	70	51.6293	90	66.3806
11	8.1132	31	22.8644	51	37.6157	71	52.3669	91	67.1181
12	8.8507	32	23.6020	52	38.3532	72	53.1045	92	67.8557
13	9.5883	33	24.3395	53	39.0908	73	53.8420	93	68.5933
14	10.3259	34	25.0771	54	39.8284	74	54.5720	94	69.3308
15	11.0634	35	25.8147	55	40.5659	75	55.3172	95	70.0684
16	11.8010	36	26.5522	56	41.3035	76	56.0547	96	70.8060
17	12.5386	37	27.2898	57	42.0410	77	56.7923	97	71.5435
18	13.2761	38	28.0274	58	42.7786	78	57.5298	98	72.2811
19	14.0137	39	28.7649	59	43.5162	79	58.2674	99	73.0187
20	14.7512	40	29.5025	60	44.2537	80	59.0050	100	73.7562

in. to mm

in.	mm	in.	mm	in.	mm	in.	mm	in.	mm
.01	.254	.21	5.334	.41	10.414	.61	15.494	.81	20.574
.02	.508	.22	5.588	.42	10.668	.62	15.748	.82	20.828
.03	.762	.23	5.842	.43	10.922	.63	16.002	.83	21.082
.04	1.016	.24	6.096	.44	11.176	.64	16.256	.84	21.336
.05	1.270	.25	6.350	.45	11.430	.65	16.510	.85	21.590
.06	1.524	.26	6.604	.46	11.684	.66	16.764	.86	21.844
.07	1.778	.27	6.858	.47	11.938	.67	17.018	.87	22.098
.08	2.032	.28	7.112	.48	12.192	.68	17.272	.88	22.352
.09	2.286	.29	7.366	.49	12.446	.69	17.526	.89	22.606
.10	2.540	.30	7.620	.50	12.700	.70	17.780	.90	22.860
.11	2.794	.31	7.874	.51	12.954	.71	18.034	.91	23.114
.12	3.048	.32	8.128	.52	13.208	.72	18.288	.92	23.368
.13	3.302	.33	8.382	.53	13.462	.73	18.542	.93	23.622
.14	3.556	.34	8.636	.54	13.716	.74	18.796	.94	23.876
.15	3.810	.35	8.890	.55	13.970	.75	19.050	.95	24.130
.16	4.064	.36	9.144	.56	14.224	.76	19.304	.96	24.384
.17	3.318	.37	9.398	.57	14.478	.77	19.558	.97	24.638
.18	4.572	.38	9.652	.58	14.732	.78	19.812	.98	24.892
.19	4.826	.39	9.906	.59	14.986	.79	20.066	.99	25.146
.20	5.080	.40	10.160	.60	15.240	.80	20.320	1.00	25.400

mm to in.

mm	in.	mm	in.	mm	in.	mm	in.	mm	in.
.01	.00039	.21	.00827	.41	.01614	.61	.02402	.81	.03189
.02	.00079	.22	.00866	.42	.01654	.62	.02441	.82	.03228
.03	.00118	.23	.00906	.43	.01693	.63	.02480	.83	.03268
.04	.00157	.24	.00945	.44	.01732	.64	.02520	.84	.03307
.05	.00197	.25	.00984	.45	.01772	.65	.02559	.85	.03346
.06	.00236	.26	.01024	.46	.01811	.66	.02598	.86	.03386
.07	.00276	.27	.01063	.47	.01850	.67	.02638	.87	.03425
.08	.00315	.28	.01102	.48	.01890	.68	.02677	.88	.03465
.09	.00354	.29	.01142	.49	.01929	.69	.02717	.89	.03504
.10	.00394	.30	.01181	.50	.01969	.70	.02756	.90	.03543
.11	.00433	.31	.01220	.51	.02008	.71	.02795	.91	.03583
.12	.00472	.32	.01260	.52	.02047	.72	.02835	.92	.03622
.13	.00512	.33	.01299	.53	.02087	.73	.02874	.93	.03661
.14	.00551	.34	.01339	.54	.02126	.74	.02913	.94	.03701
.15	.00591	.35	.01378	.55	.02165	.75	.02953	.95	.03740
.16	.00630	.36	.01417	.56	.02205	.76	.02992	.96	.03780
.17	.00669	.37	.01457	.57	.02244	.77	.03032	.97	.03819
.18	.00709	.38	.01496	.58	.02283	.78	.03071	.98	.03858
.19	.00748	.39	.01535	.59	.02323	.79	.03110	.99	.03898
.20	.00787	.40	.01575	.60	.02362	.80	.03150	1.00	.03937

J901N-10

Fig. 5 METRIC CONVERSION CHART

TORQUE REFERENCES

DESCRIPTION

Individual Torque Charts appear within many or the Groups. Refer to the Standard Torque Specifications Chart for torque references not listed in the individual torque charts (Fig. 6).

SPECIFIED TORQUE FOR STANDARD BOLTS

Class	Diameter mm	Pitch mm	Specified torque					
			Hexagon head bolt			Hexagon flange bolt		
			N•m	kgf-cm	ft-lbf	N•m	kgf-cm	ft-lbf
4T	6	1	5	55	48 in.-lbf	6	60	52 in.-lbf
	8	1.25	12.5	130	9	14	145	10
	10	1.25	26	260	19	29	290	21
	12	1.25	47	480	35	53	540	39
	14	1.5	74	760	55	84	850	61
	16	1.5	115	1,150	83	—	—	—
5T	6	1	6.5	65	56 in.-lbf	7.5	75	65 in.-lbf
	8	1.25	15.5	160	12	17.5	175	13
	10	1.25	32	330	24	36	360	26
	12	1.25	59	600	43	65	670	48
	14	1.5	91	930	67	100	1,050	76
	16	1.5	140	1,400	101	—	—	—
6T	6	1	8	80	69 in.-lbf	9	90	78 in.-lbf
	8	1.25	19	195	14	21	210	15
	10	1.25	39	400	29	44	440	32
	12	1.25	71	730	53	80	810	59
	14	1.5	110	1,100	80	125	1,250	90
	16	1.5	170	1,750	127	—	—	—
7T	6	1	10.5	110	8	12	120	9
	8	1.25	25	260	19	28	290	21
	10	1.25	52	530	38	58	590	43
	12	1.25	95	970	70	105	1,050	76
	14	1.5	145	1,500	108	165	1,700	123
	16	1.5	230	2,300	166	—	—	—
8T	8	1.25	29	300	22	33	330	24
	10	1.25	61	620	45	68	690	50
	12	1.25	110	1,100	80	120	1,250	90
9T	8	1.25	34	340	25	37	380	27
	10	1.25	70	710	51	78	790	57
	12	1.25	125	1,300	94	140	1,450	105
10T	8	1.25	38	390	28	42	430	31
	10	1.25	78	800	58	88	890	64
	12	1.25	140	1,450	105	155	1,600	116
11T	8	1.25	42	430	31	47	480	35
	10	1.25	87	890	64	97	990	72
	12	1.25	155	1,600	116	175	1,800	130

Fig. 6 TORQUE SPECIFICATIONS

VEHICLE IDENTIFICATION NUMBER

DESCRIPTION

The Vehicle Identification Number (VIN) is located on the upper left corner of the instrument panel, near the left windshield pillar (Fig. 7). The VIN consists of 17 characters in a combination of letters and numbers that provide specific information about the vehicle. Refer to VIN Code Breakdown table for decoding information.

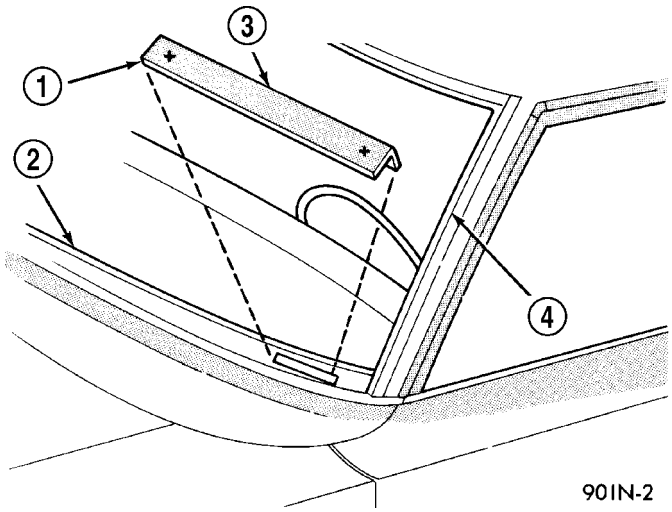

Fig. 7 Vehicle Identification Number (VIN Plate)

1 - V.I.N. PLATE
2 - DASH PANEL
3 - 17 DIGITS
4 - WINDSHIELD OPENING

VIN CODE BREAKDOWN

POSITION	INTERPRETATION	CODE = DESCRIPTION
1	Country of Origin	1 = Manufacture By DaimlerChrysler Corporation.
2	Make	B = Dodge C = Chrysler
3	Vehicle Type	3 = Passenger Car
4	Passenger Safety	A = Active Front and Side Airbag D = Without Airbags E = Active Driver and Passenger Airbag
5	Car Line	J = Stratus/Cirrus L = Sebring
6	Series	3 = M (Medium) 4 = H (High line) 5 = P (Premium) 6 = S (Sport) 7 = X (Special)
	Transmission Table For Bux w/ABB, ABJ	B = 4 Speed Automatic N = 5-Speed Manual
7	Body Style	5 = Convertible / Open Body 6 = 4 Door Sedan

VEHICLE IDENTIFICATION NUMBER (Continued)

POSITION	INTERPRETATION	CODE = DESCRIPTION
8	Engines	J = 2.4L 4 Cyl. 16V Pzev R = 2.7L 6 Cyl. 24V DOHC Gasoline S = 2.4L 4 Cyl. 16V DOHC Turbo Gasoline T = 2.7L 6 Cyl. 24V DOHC FFV X = 2.4L 4 Cyl. 16V DOHC Gasoline
9	Check Digit	0 through 9 or X
10	Model Year	4 = 2004
11	Plant	N = Sterling Heights Assembly Plant
12 through 17	Sequence Number	6 digit number assigned by assembly plant.

VIN CHECK DIGIT

DESCRIPTION

To protect the consumer from theft and possible fraud the manufacturer is required to include a Check Digit at the ninth position of the Vehicle Identification Number. The check digit is used by the manufacturer and government agencies to verify the authenticity of the vehicle and official documentation. The formula to use the check digit is not released to the general public.

VEHICLE SAFETY CERTIFICATION LABEL

DESCRIPTION

A vehicle safety certification label is attached to the rear shutface of the driver's door (Fig. 8). This label indicates date of manufacture (month and year), Gross Vehicle Weight Rating (GVWR), Gross Axle Weight Rating (GAWR) front, Gross Axle Weight Rating (GAWR) rear and the Vehicle Identification Number (VIN). The Month, Day and Hour of manufacture is also included.

All communications or inquiries regarding the vehicle should include the Month-Day-Hour and Vehicle Identification Number.

E-MARK LABEL

DESCRIPTION

An E-mark Label (Fig. 9) is located on the rear shut face of the driver's door. The label contains the following information:

- Date of Manufacture
- Month-Day-Hour (MDH)
- Vehicle Identification Number (VIN)
- Country Codes
- Regulation Number

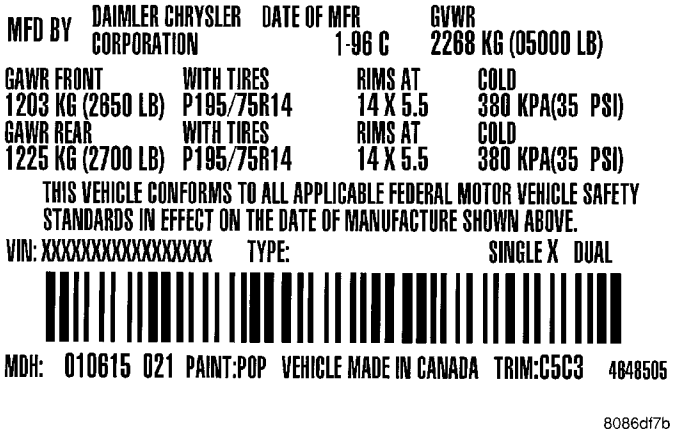

Fig. 8 VEHICLE SAFETY CERTIFICATION LABEL - TYPICAL

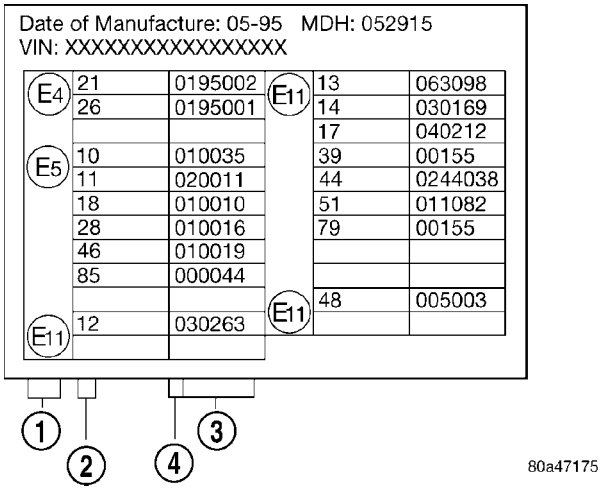

Fig. 9 E-MARK LABEL

1 - COUNTRY CODE
2 - REGULATION NUMBER
3 - APPROVAL NUMBER
4 - AMENDMENT NUMBER

VECI LABEL

DESCRIPTION

All models have a Vehicle Emission Control Information (VECI) Label. Chrysler permanently attaches the label in the engine compartment. It cannot be removed without defacing information and destroying the label.

The label contains the vehicle's emission specifications and vacuum hose routings. All hoses must be connected and routed according to the label.

MANUFACTURER PLATE

DESCRIPTION

The Manufacturer Plate (Fig. 10) is located in the engine compartment on the passenger side rear corner of the hood. The plate contains five lines of information:

1. Vehicle Identification Number (VIN)
2. Gross Vehicle Mass (GVM)
3. Gross Train Mass (GTM)
4. Gross Front Axle Rating (GFAR)
5. Gross Rear Axle Rating (GRAR)

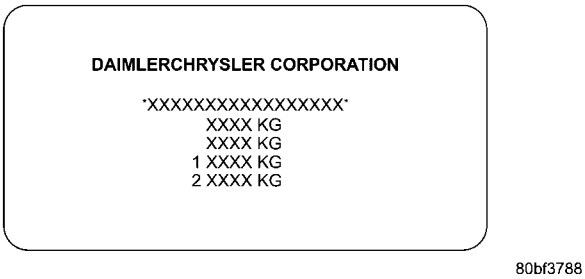

Fig. 10 MANUFACTURER PLATE

LUBRICATION & MAINTENANCE

TABLE OF CONTENTS

	page
INTERNATIONAL SYMBOLS	
DESCRIPTION	1
FLUID TYPES	
DESCRIPTION	
DESCRIPTION - ENGINE OIL AND LUBRICANTS	1
DESCRIPTION - ENGINE COOLANT	3
DESCRIPTION - FLEXIBLE FUEL VEHICLES (2.7L ENGINES ONLY)	3
DESCRIPTION - AUTOMATIC/MANUAL TRANSAXLE FLUID	4
DESCRIPTION - FUEL REQUIREMENTS	5
FLUID CAPACITIES	
SPECIFICATIONS	
FLUID CAPACITIES	6
FLUID FILL/CHECK LOCATIONS	
DESCRIPTION	6
LUBRICATION POINTS	
DESCRIPTION	6
MAINTENANCE SCHEDULES	
DESCRIPTION	
DESCRIPTION	7
DESCRIPTION - EXPORT	13
HOISTING	
STANDARD PROCEDURE - HOISTING	17
JUMP STARTING	
STANDARD PROCEDURE - JUMP STARTING	17
TOWING	
STANDARD PROCEDURE - TOWING	18

INTERNATIONAL SYMBOLS

DESCRIPTION

DaimlerChrysler Corporation uses international symbols to identify engine compartment lubricant and fluid inspection and fill locations (Fig. 1).

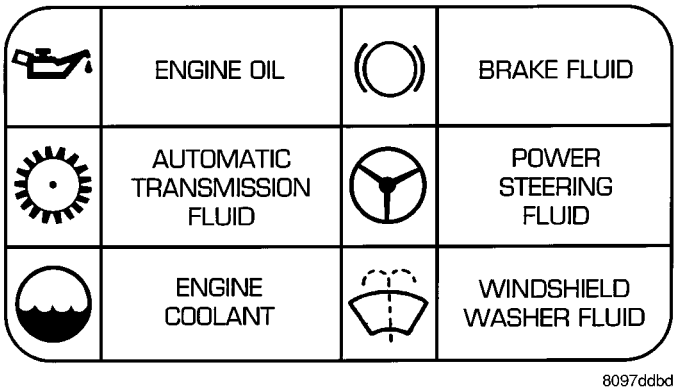

Fig. 1 INTERNATIONAL SYMBOLS

FLUID TYPES

DESCRIPTION

DESCRIPTION - ENGINE OIL AND LUBRICANTS

WARNING: NEW OR USED ENGINE OIL CAN BE IRRITATING TO THE SKIN. AVOID PROLONGED OR REPEATED SKIN CONTACT WITH ENGINE OIL. CONTAMINANTS IN USED ENGINE OIL, CAUSED BY INTERNAL COMBUSTION, CAN BE HAZARDOUS TO YOUR HEALTH. THOROUGHLY WASH EXPOSED SKIN WITH SOAP AND WATER. DO NOT WASH SKIN WITH GASOLINE, DIESEL FUEL, THINNER, OR SOLVENTS, HEALTH PROBLEMS CAN RESULT. DO NOT POLLUTE, DISPOSE OF USED ENGINE OIL PROPERLY. CONTACT YOUR DEALER OR GOVERNMENT AGENCY FOR LOCATION OF COLLECTION CENTER IN YOUR AREA.

When service is required, DaimlerChrysler Corporation recommends that only Mopar® brand parts, lubricants and chemicals be used. Mopar® provides the best engineered products for servicing DaimlerChrysler Corporation vehicles.

Only lubricants bearing designations defined by the following organization should be used.

- Society of Automotive Engineers (SAE)
- American Petroleum Institute (API)
- National Lubricating Grease Institute (NLGI)

FLUID TYPES (Continued)

API SERVICE GRADE CERTIFIED

Use an engine oil that is API Certified (GF-3). Mopar® provides engine oils, meeting Material Standard MS-6395, that meet or exceed this requirement.

SAE VISCOSITY

An SAE viscosity grade is used to specify the viscosity of engine oil. Use only engine oils with multiple viscosities such as 5W-30 or 10W-30. These are specified with a dual SAE viscosity grade which indicates the cold-to-hot temperature viscosity range. Select an engine oil that is best suited to your particular temperature range and variation (Fig. 2).

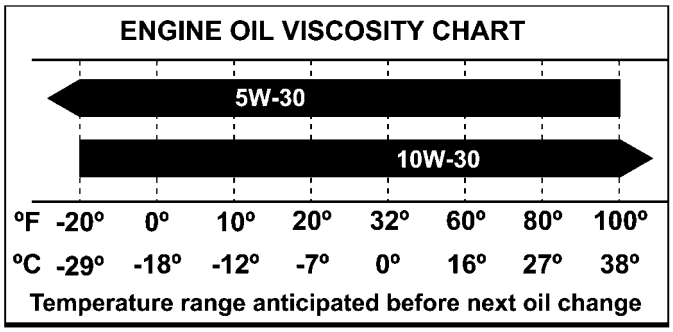

80990199

Fig. 2 TEMPERATURE/ENGINE OIL VISCOSITY

ENERGY CONSERVING OIL

An Energy Conserving type oil is recommended for gasoline engines. The designation of ENERGY CONSERVING is located on the label of an engine oil container.

CONTAINER IDENTIFICATION

Standard engine oil identification notations have been adopted to aid in the proper selection of engine oil. The identifying notations are located on the front label of engine oil plastic bottles and the top of engine oil cans (Fig. 3).

This symbol means that the oil has been certified by the American Petroleum Institute (API). DiamlerChrysler only recommends API Certified (GF-3) engine oils that meet the requirements of Material Standard MS-6395. Use Mopar® or an equivalent oil meeting the specification MS-6395.

SYNTHETIC ENGINE OILS

There are a number of engine oils being promoted as either synthetic or semi-synthetic. If you chose to use such a product, use **only** those oils that meet the American Petroleum Institute (API) and SAE viscosity standard. Follow the service schedule that describes your driving type.

9400-9

Fig. 3 API SYMBOL

ENGINE OIL ADDITIVES/SUPPLEMENTS

The manufacturer **does not recommend** the addition of any engine oil additives/supplements to the specified engine oil. Engine oil additives/supplements should not be used to enhance engine oil performance. Engine oil additives/supplements should not be used to extend engine oil change intervals. No additive is known to be safe for engine durability and can degrade emission components. Additives can contain undesirable materials that harm the long term durability of engines by:

- Doubling the level of Phosphorus in the engine oil. The ILSAC (International Lubricant Standard Approval Committee) GF-2 and GF-3 standards require that engine oil contain no more than 0.10% Phosphorus to protect the vehicles emissions performance. Addition of engine oil additives/supplements can poison, from the added sulfur and phosphorus, catalysts and hinder efforts to guarantee emissions performance to 80,000 miles.
- Altering the viscosity characteristics of the engine oil so that it no longer meets the requirements of the specified viscosity grade.
- Creating potential for an undesirable additive compatibility interaction in the engine crankcase. Generally it is not desirable to mix additive packages from different suppliers in the crankcase; there have been reports of low temperature engine failures caused by additive package incompatibility with such mixtures.

GEAR LUBRICANTS

SAE ratings also apply to multigrade gear lubricants. In addition, API classification defines the lubricants usage. Such as API GL-5 and SAE 75W-90.

LUBRICANTS AND GREASES

Lubricating grease is rated for quality and usage by the NLGI. All approved products have the NLGI symbol (Fig. 4) on the label. At the bottom of the NLGI symbol is the usage and quality identification letters. Wheel bearing lubricant is identified by the letter “G”. Chassis lubricant is identified by the letter “L”. The letter following the usage letter indicates

FLUID TYPES (Continued)

the quality of the lubricant. The following symbols indicate the highest quality.

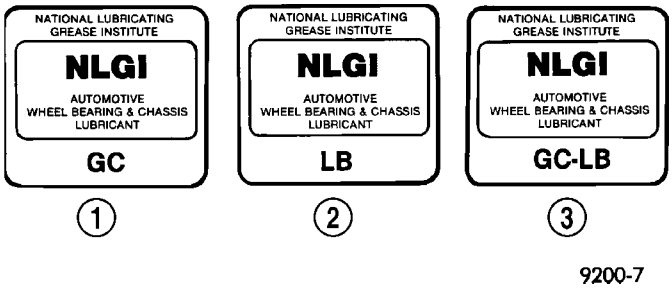

Fig. 4 NLGI SYMBOL

1 - WHEEL BEARINGS
2 - CHASSIS LUBRICATION
3 - CHASSIS AND WHEEL BEARINGS

SPECIALIZED LUBRICANTS AND OILS

Some maintenance or repair procedures may require the use of specialized lubricants or oils. Consult the appropriate sections in this manual for the correct application of these lubricants.

DESCRIPTION - ENGINE COOLANT

WARNING: ANTIFREEZE IS AN ETHYLENE GLYCOL BASE COOLANT AND IS HARMFUL IF SWALLOWED OR INHALED. IF SWALLOWED, DRINK TWO GLASSES OF WATER AND INDUCE VOMITING. IF INHALED, MOVE TO FRESH AIR AREA. SEEK MEDICAL ATTENTION IMMEDIATELY. DO NOT STORE IN OPEN OR UNMARKED CONTAINERS. WASH SKIN AND CLOTHING THOROUGHLY AFTER COMING IN CONTACT WITH ETHYLENE GLYCOL. KEEP OUT OF REACH OF CHILDREN. DISPOSE OF GLYCOL BASE COOLANT PROPERLY, CONTACT YOUR DEALER OR GOVERNMENT AGENCY FOR LOCATION OF COLLECTION CENTER IN YOUR AREA. DO NOT OPEN A COOLING SYSTEM WHEN THE ENGINE IS AT OPERATING TEMPERATURE OR HOT UNDER PRESSURE, PERSONAL INJURY CAN RESULT. AVOID RADIATOR COOLING FAN WHEN ENGINE COMPARTMENT RELATED SERVICE IS PERFORMED, PERSONAL INJURY CAN RESULT.

CAUTION: Use of Propylene Glycol based coolants is not recommended, as they provide less freeze protection and less boiling protection.

The cooling system is designed around the coolant. The coolant must accept heat from engine metal, in the cylinder head area near the exhaust valves and engine block. Then coolant carries the heat to the radiator where the tube/fin radiator can transfer the heat to the air.

The use of aluminum cylinder blocks, cylinder heads, and water pumps requires special corrosion protection. Mopar® Antifreeze/Coolant, 5 Year/100,000 Mile Formula (MS-9769), or the equivalent ethylene glycol base coolant with hybrid organic corrosion inhibitors (called HOAT, for Hybrid Organic Additive Technology) is recommended. This coolant offers the best engine cooling without corrosion when mixed with 50% Ethylene Glycol and 50% distilled water to obtain a freeze point of -37°C (-35°F). If it loses color or becomes contaminated, drain, flush, and replace with fresh properly mixed coolant solution.

The green coolant **MUST NOT BE MIXED** with the orange or magenta coolants. When replacing coolant the complete system flush must be performed before using the replacement coolant.

CAUTION: Mopar® Antifreeze/Coolant, 5 Year/100,000 Mile Formula (MS-9769) may not be mixed with any other type of antifreeze. Doing so will reduce the corrosion protection and may result in premature water pump seal failure. If non-HOAT coolant is introduced into the cooling system in an emergency, it should be replaced with the specified coolant as soon as possible.

DESCRIPTION - FLEXIBLE FUEL VEHICLES (2.7L ENGINES ONLY)

The information in this section is for Flexible Fuel Vehicles (FFV) only. These vehicles can be identified by the unique Fuel Filler Door Label that states **Ethanol (E-85) or Unleaded Gasoline Only.** This section only covers those subjects that are unique to these vehicles. Please refer to the other sections of this manual for information on features that are common between Flexible Fuel and gasoline only powered vehicles.

CAUTION: Only vehicles with the E-85 fuel filler door label can operate on E-85.

Ethanol Fuel (E-85)

E-85 is a mixture of approximately 85% fuel ethanol and 15% unleaded gasoline.

WARNING: Ethanol vapors are extremely flammable and could cause serious personal injury. Never have any smoking materials lit in or near the vehicle when removing the fuel filler tube cap (gas cap) or filling the tank. Do not use E-85 as a cleaning agent and never use it near an open flame.

FLUID TYPES (Continued)

Fuel Requirements

The vehicle will operate on both unleaded gasoline with an octane rating of 87, or E-85 fuel, or any mixture of these two.

For best results, a refueling pattern that alternates between E-85 and unleaded gasoline should be avoided. When you do switch fuels, it is recommended that

- you do not switch when the fuel gauge indicates less than 1/4 full
- you do not add less than 5 gallons when refueling
- you operate the vehicle immediately after refueling for a period of at least 5 minutes

Observing these precautions will avoid possible hard starting and/or significant deterioration in driveability during warm up.

NOTE: When the ambient temperature is above 90°F, you may experience hard starting and rough idle following start up even if the above recommendations are followed.

Engine Oil Selection for Operating on E-85

If vehicle operates on E-85 fuel either full or part-time, use only Mopar® Flexible Fuel 5W-30 engine oil or an equivalent that meets DaimlerChrysler Standard MS-9214. Equivalent commercial Flexible Fuel engine oils may be labeled as Multi-Fuel, Variable Fuel, Flexible Fuel, etc. These engine oils may be satisfactory if they meet the DaimlerChrysler Standard.

SAE 5W-30 engine oil is preferred for use in Flexible Fuel engines.

CAUTION: If Flexible Fuel engine oil is not used when using E-85 fuel, engine wear or damage may result.

Engine Oil Selection for Operating on Gasoline

If you operate the vehicle on regular unleaded gasoline **ONLY,** use Mopar® oil or an equivalent that meets certified API (American Petroleum Institute) Quality.

Starting

The characteristics of E-85 fuel make it unsuitable for use when ambient temperatures fall below 0°F. In the range of 0°F to 32°F, you may experience an increase in the time it takes for your engine to start, and a deterioration in driveability (sags and/or hesitations) until the engine is fully warmed up.

Cruising Range

Because E-85 fuel contains less energy per gallon than gasoline, you will experience an increase in fuel consumption. You can expect your MPG and your driving range to decrease by about 30% compared to gasoline operation.

Replacement Parts

Many components in your Flexible Fuel Vehicle (FFV) are designed to be compatible with ethanol. Always be sure that your vehicle is serviced with correct ethanol compatible parts.

CAUTION: Replacing fuel system components with non-ethanol compatible components can damage your vehicle and may void the warranty.

Maintenance

If you operate the vehicle using E-85 fuel, follow Schedule B in the maintenance schedule section of this manual.

DESCRIPTION - AUTOMATIC/MANUAL TRANSAXLE FLUID

NOTE: Refer to the maintenance schedules in the vehicle owner's manual for the recommended maintenance (fluid/filter change) intervals for this transaxle.

NOTE: All transaxles have a common transmission and differential sump. Filling the transaxle accommodates the differential as well.

TRANSMISSION FLUID

Mopar® ATF+4 (Automatic Transmission Fluid) is required in the 41TE automatic and T350/T850 manual transaxles. Substitute fluids can induce torque converter clutch shudder, or premature geartrain failure.

Mopar® ATF+4 (Automatic Transmission Fluid) when new is red in color. The ATF is dyed red so it can be identified from other fluids used in the vehicle such as engine oil or antifreeze. The red color is not permanent and is not an indicator of fluid condition. As the vehicle is driven, the ATF will begin to look darker in color and may eventually become brown. **This is normal.** A dark brown/black fluid accompanied with a burnt odor and/or deterioration in shift quality may indicate fluid deterioration or transmission component failure.

FLUID TYPES (Continued)

FLUID ADDITIVES

DaimlerChrysler strongly recommends against the addition of any fluids to the transmission, other than those automatic transmission fluids listed above. Exceptions to this policy are the use of special dyes to aid in detecting fluid leaks.

Various "special" additives and supplements exist that claim to improve shift feel and/or quality. These additives and others also claim to improve converter clutch operation and inhibit overheating, oxidation, varnish, and sludge. These claims have not been supported to the satisfaction of DaimlerChrysler and these additives **must not be used.** The use of transmission "sealers" should also be avoided, since they may adversely affect the integrity of transmission seals.

DESCRIPTION - FUEL REQUIREMENTS

Your engine is designed to meet all emissions regulations and provide excellent fuel economy and performance when using high quality unleaded gasoline having an octane rating of 87. The use of premium gasoline is not recommended. The use of premium gasoline will provide no benefit over high quality regular gasoline, and in some circumstances may result in poorer performance.

Light spark knock at low engine speeds is not harmful to your engine. However, continued heavy spark knock at high speeds can cause damage and immediate service is required. Engine damage resulting from operation with a heavy spark knock may not be covered by the new vehicle warranty.

Poor quality gasoline can cause problems such as hard starting, stalling and hesitations. If you experience these symptoms, try another brand of gasoline before considering service for the vehicle.

Over 40 auto manufacturers world-wide have issued and endorsed consistent gasoline specifications (the Worldwide Fuel Charter, WWFC) to define fuel properties necessary to deliver enhanced emissions, performance and durability for your vehicle. We recommend the use of gasolines that meet the WWFC specifications if they are available.

REFORMULATED GASOLINE

Many areas of the country require the use of cleaner burning gasoline referred to as "reformulated" gasoline. Reformulated gasoline contain oxygenates, and are specifically blended to reduce vehicle emissions and improve air quality.

We strongly support the use of reformulated gasoline. Properly blended reformulated gasoline will provide excellent performance and durability for the engine and fuel system components.

GASOLINE/OXYGENATE BLENDS

Some fuel suppliers blend unleaded gasoline with oxygenates such as 10% ethanol, MTBE, and ETBE. Oxygenates are required in some areas of the country during the winter months to reduce carbon monoxide emissions. Fuels blended with these oxygenates may be used in your vehicle.

CAUTION: DO NOT use gasoline containing METHANOL. Gasoline containing methanol may damage critical fuel system components.

MMT IN GASOLINE

MMT is a manganese-containing metallic additive that is blended into some gasoline to increase octane. Gasoline blended with MMT provide no performance advantage beyond gasoline of the same octane number without MMT. Gasoline blended with MMT reduce spark plug life and reduce emission system performance in some vehicles. We recommend that gasoline free of MMT be used in your vehicle. The MMT content of gasoline may not be indicated on the gasoline pump; therefore, you should ask your gasoline retailer whether or not his/her gasoline contains MMT.

It is even more important to look for gasoline without MMT in Canada because MMT can be used at levels higher than allowed in the United States. MMT is prohibited in Federal and California reformulated gasoline.

SULFUR IN GASOLINE

If you live in the northeast United States, your vehicle may have been designed to meet California low emission standards with Cleaner-Burning California reformulated gasoline with low sulfur. If such fuels are not available in states adopting California emission standards, your vehicles will operate satisfactorily on fuels meeting federal specifications, but emission control system performance may be adversely affected. Gasoline sold outside of California is permitted to have higher sulfur levels which may affect the performance of the vehicle's catalytic converter. This may cause the Malfunction Indicator Lamp (MIL), Check Engine or Service Engine Soon light to illuminate. We recommend that you try a different brand of unleaded gasoline having lower sulfur to determine if the problem is fuel related prior to returning your vehicle to an authorized dealer for service.

CAUTION: If the Malfunction Indicator Lamp (MIL), Check Engine or Service Engine Soon light is flashing, immediate service is required; see on-board diagnostics system section.

FLUID TYPES (Continued)

MATERIALS ADDED TO FUEL

All gasoline sold in the United States and Canada are required to contain effective detergent additives. Use of additional detergents or other additives is not needed under normal conditions.

FUEL SYSTEM CAUTIONS

CAUTION: Follow these guidelines to maintain your vehicle's performance:

- The use of leaded gas is prohibited by Federal law. Using leaded gasoline can impair engine performance, damage the emission control system, and could result in loss of warranty coverage.
- An out-of-tune engine, or certain fuel or ignition malfunctions, can cause the catalytic converter to overheat. If you notice a pungent burning odor or some light smoke, your engine may be out of tune or malfunctioning and may require immediate service. Contact your dealer for service assistance.
- When pulling a heavy load or driving a fully loaded vehicle when the humidity is low and the temperature is high, use a premium unleaded fuel to help prevent spark knock. If spark knock persists, lighten the load, or engine piston damage may result.
- The use of fuel additives which are now being sold as octane enhancers is not recommended. Most of these products contain high concentrations of methanol. Fuel system damage or vehicle performance problems resulting from the use of such fuels or additives is not the responsibility of DaimlerChrysler Corporation and may not be covered under the new vehicle warranty.

NOTE: Intentional tampering with emissions control systems can result in civil penalties being assessed against you.

FLUID CAPACITIES

SPECIFICATIONS

FLUID CAPACITIES

DESCRIPTION	SPECIFICATION
Fuel Tank	60.5L (16.0 gal.)
Engine Oil	
2.0L Engines*	4.25L (4.5 qts.)
2.4L Engines*	4.75L (5.0 qts.)
2.7L Engines*	4.75L (5.0 qts.)
COOLING SYSTEM**	
2.0L Engine	7.5L (8.0 qts.)
2.4L Engine	7.5L (8.0 qts.)
2.7L Engine	9.0L (9.5 qts.)
AUTOMATIC TRANSAXLE	
Automatic Transaxle - Estimated Service Fill	3.8L (4.0 qts.)
Automatic Transaxle - Overhaul Capacity with Torque Converter Empty	8.7L (9.2 qts.)
MANUAL TRANSAXLE	
Capacity-T350	2.4-2.7L (2.5-2.8 qts.)
Capacity-T850	2.4-2.7L (2.5-2.8 qts.)
*(includes new filter)	
**(includes heater and recovery bottle)	

FLUID FILL/CHECK LOCATIONS

DESCRIPTION

The fluid check/fill point locations are located in each applicable service manual section.

LUBRICATION POINTS

DESCRIPTION

Lubrication point locations are located in each applicable Sections.

MAINTENANCE SCHEDULES

DESCRIPTION

DESCRIPTION

There are two maintenance schedules for North America that show the **required** service for your vehicle.

First is Schedule **"B"**. It is for vehicles that are operated under the conditions that are listed below and at the beginning of the schedule.

- Day or night temperatures are below 32° F (0° C).
- Stop and go driving.
- Extensive engine idling.
- Driving in dusty conditions.
- Short trips of less than 10 miles (16 km).
- More than 50% of your driving is at sustained high speeds during hot weather, above 90° F (32° C).◊
- Trailer towing.◊
- Taxi, police, or delivery service (commercial service).◊
- Off-road or desert operation.
- **If equipped for and operating with E-85 (ethanol) fuel.**

NOTE: If ANY of these apply to you then change your engine oil every 3,000 miles (5,000 km) or 3 months, whichever comes first and follow schedule B of the "Maintenance Schedules" section of this manual.

NOTE: Most vehicles are operated under the conditions listed for Schedule ″B″.

Second is Schedule **"A"**. It is for vehicles that are not operated under any of the conditions listed under Schedule **"B"** .

NOTE: Under no circumstances should oil change intervals exceed 6 months or 6,000 miles, whichever comes first.

CAUTION: Failure to perform the required maintenance items may result in damage to the vehicle.

At Each Stop for Fuel

- Check the engine oil level about 5 minutes after a fully warmed engine is shut off. Checking the oil level while the vehicle is on level ground will improve the accuracy of the oil level reading. Add oil only when the level is at or below the ADD or MIN mark.
- Check the windshield washer solvent and add if required.

Once a Month

- Check tire pressure and look for unusual wear or damage.
- Inspect the battery and clean and tighten the terminals as required.
- Check the fluid levels of coolant bottle, brake master cylinder and transmission, add as needed.
- Check all lights and all other electrical items for correct operation.
- Check rubber seals on each side of the radiator for proper fit.

At Each Oil Change

- Change the engine oil filter.
- Inspect the exhaust system.
- Inspect the brake linings, hoses and calipers.
- Inspect the CV joints and front and rear suspension components.
- Check the automatic transmission fluid level.
- Check the manual transmission fluid level.
- Check the coolant level, hoses, and clamps.
- Rotate the tires at each oil change interval shown on Schedule "A" 6,000 miles (10 000 km) or every other interval shown on Schedule "B" 6,000 miles (10 000 km).

NOTE: In 2.7L Engines equipped with Flex Fuel Engine (FFV), change engine oil every 5 months or 5,000 miles, whichever comes first. This applies to both Maintenance Schedule A and B.

MAINTENANCE SCHEDULES (Continued)

SCHEDULE B - NORTH AMERICA

Follow schedule "B" if you usually operate your vehicle under one or more of the following conditions. Change the automatic transmission fluid and filter every 60,000 miles (96 000 km) if the vehicle is usually operated under one or more of the conditions marked with an ◊.

- Day or night temperatures are below 32° F (0° C).
- Stop and go driving.
- Extensive engine idling.
- Driving in dusty conditions.
- Short trips of less than 10 miles (16.2 km).
- More than 50% of your driving is at sustained high speeds during hot weather, above 90° F (32° C). ◊
- Trailer towing. ◊
- Taxi, police or delivery service (commercial services). ◊
- Off-road or desert operation.
- **If equipped for and operating with E-85 (ethanol) fuel.**

NOTE: If ANY of these apply to you then change your engine oil every 3,000 miles (5 000 km) or 3 months, whichever comes first and follow schedule "B" of the "Maintenance Schedules" section of this manual.

Miles (Kilometers)	**3,000 (5 000)**	**6,000 (10 000)**	**9,000 (14 000)**	**12,000 (19 000)**	**15,000 (24 000)**	**18,000 (29 000)**
Change engine oil and engine oil filter.	X	X	X	X	X	X
Inspect the **air cleaner filter** and replace if necessary.*	X	X	X	X	X	X
Inspect the front and rear brake linings and rotors.				X		

Miles (Kilometers)	**21,000 (34 000)**	**24,000 (38 000)**	**27,000 (43 000)**	**30,000 (48 000)**	**33,000 (53 000)**	**36,000 (58 000)**
Change engine oil and engine oil filter.	X	X	X	X	X	X
Inspect the **air cleaner filter** and replace if required.*	X	X	X		X	X
Replace the **air cleaner filter.**				X		
Inspect the front and rear brake linings and rotors.		X				X
Check and replace, if necessary, the **PCV valve.***				X		
Replace the **spark plugs** on 2.4 liter engines.				X		

Miles (Kilometers)	**39,000 (62 000)**	**42,000 (67 000)**	**45,000 (72 000)**	**48,000 (77 000)**	**51,000 (82 000)**	**54,000 (86 000)**
Change engine oil and engine oil filter.	X	X	X	X	X	X
Inspect the **air cleaner filter** and replace if necessary.*	X	X	X	X	X	X
Inspect the front and rear brake linings and rotors.				X		

MAINTENANCE SCHEDULES (Continued)

SCHEDULE B - NORTH AMERICA

Miles (Kilometers)	**57,000 (91 000)**	**60,000 (96 000)**	**63,000 (101 000)**	**66,000 (106 000)**	**69,000 (110 000)**	**72,000 (115 000)**
Change engine oil and engine oil filter.	X	X	X	X	X	X
Inspect the **air cleaner filter** and replace if necessary.*	X		X	X	X	X
Replace the **air cleaner filter.**		X				
Inspect the front and rear brake linings and rotors.		X				X
Replace the **ignition cables** on 2.4 liter engine.		X				
Replace alternator with accessory drive belts on the 2.7 liter engine.		X				
Replace the **spark plugs** on the 2.4 liter engine.		X				
Check and replace, if necessary, the **PCV valve.** *‡		X				
Change the automatic transmission fluid and filter. ◊		X				

Miles (Kilometers)	**75,000 (120 000)**	**78,000 (125 000)**	**81,000 (130 000)**	**84,000 (134 000)**	**87,000 (139 000)**	**90,000 (144 000)**
Change engine oil and engine oil filter.	X	X	X	X	X	X
Inspect the **air cleaner filter** and replace if necessary.*	X	X	X	X	X	
Replace the **air cleaner filter.***						X
Replace the **engine timing belt** on 2.4 liter engine.						X
Inspect the front and rear brake linings and rotors.				X		
Replace the **spark plugs** on 2.4 liter engine.						X
Inspect and replace PCV Valve if required.						X

MAINTENANCE SCHEDULES (Continued)

SCHEDULE B - NORTH AMERICA

Miles (Kilometers)	**93,000 (149 000)**	**96,000 (154 000)**	**99,000 (158 000)**	**100,000 (160 000)**	**102,000 (163 000)**	**105,000 (168 000)**
Change engine oil and engine oil filter.	X	X	X		X	X
Inspect the **air cleaner filter** and replace if necessary.*	X	X	X		X	
Replace the **air cleaner filter.**						X
Inspect the front and rear brake linings and rotors.		X				
Flush and replace the engine coolant.				X		
Replace the **spark plugs** on the 2.7 liter engine.				X		
Check and retension accessory drive belts on 2.7 liter engine.						X
Replace the accessory drive belts on 2.4 liter engine.				X		

* This maintenance is recommended by the manufacture to the owner but is not required to maintain the emissions warranty.

‡ This maintenance is not required if previously replaced.

Inspection and service should also be performed anytime a malfunction is observed or suspected. Retain all receipts.

MAINTENANCE SCHEDULES (Continued)

SCHEDULE A - NORTH AMERICA

Miles **(Kilometers)** **[Months]**	**6,000** **(10 000)** **[6]**	**12,000** **(19 000)** **[12]**	**18,000** **(29 000)** **[18]**	**24,000** **(38 000)** **[24]**	**30,000** **(48 000)** **[30]**	**36,000** **(58 000)** **[36]**
Change engine oil and engine oil filter.	X	X	X	X	X	X
Inspect the **air cleaner filter** and replace if necessary.*	X	X	X	X		X
Replace the **air cleaner filter.***					X	
Replace the **spark plugs** on 2.4 liter engine.					X	
Inspect the front brake pads and rear brake linings, rotors and drums.			X			
Inspect and replace PCV valve if required.					X	

Miles **(Kilometers)** **[Months]**	**42,000** **(67 000)** **[42]**	**48,000** **(77 000)** **[48]**	**54,000** **(86 000)** **[54]**	**60,000** **(96 000)** **[60]**	**66,000** **(106 000)** **[66]**	**72,000** **(115 000)** **[72]**
Change engine oil and engine oil filter.	X	X	X	X	X	X
Inspect the **air cleaner filter** and replace if required.*	X	X	X		X	X
Replace the **air cleaner filter.***				X		
Inspect the front brake pads and rear brake linings, rotors, drums.		X				X
Replace the **spark plugs** on 2.4 liter engine.				X		
Flush and replace engine coolant at 60 months or 100,000 miles.				X		
Check and replace, if necessary, the **PCV valve.** *‡				X		
Replace the **ignition cables** on 2.4 liter engine.				X		
Replace alternator with accessory drive belts in 2.7 liter engine.				X		

MAINTENANCE SCHEDULES (Continued)

SCHEDULE A - NORTH AMERICA

Miles **(Kilometers)** **[Months]**	**78,000** **(125 000)** **[78]**	**84,000** **(134 000)** **[84]**	**90,000** **(144 000)** **[90]**	**96,000** **(154 000)** **[96]**	**102,000** **(163 000)** **[102]**
Change engine oil and engine oil filter.	X	X	X	X	X
Inspect the **air cleaner filter** and replace if required.*	X	X			X
Replace the **air cleaner filter.***			X		
Inspect the front brake pads and rear brake linings, rotors.			X		
Replace the **spark plugs** on 2.4 liter engine.			X		
Replace the **spark plugs** on 2.7 liter engine.					X
Check and replace, if necessary, the **PCV valve.***‡			X		
Replace the **engine timing belt** on 2.4 liter engine.*					X
Check and retension alternator drive belts on 2.7 liter engine.					X
Replace the accessory drive belts on 2.4L engine.				X	
Flush and replace the engine coolant at 60 months or 100,000 miles.					X

* This maintenance is recommended by the manufacture to the owner but is not required to maintain the emissions warranty.

‡ This maintenance is not required if previously replaced.

Inspection and service should also be performed anytime a malfunction is observed or suspected. Retain all receipts.

WARNING: You can be badly injured working on or around a motor vehicle. Do only that service work for which you have the knowledge and the right equipment. If you have any doubt about your ability to perform a service job, take your vehicle to a competent mechanic.

MAINTENANCE SCHEDULES (Continued)

DESCRIPTION - EXPORT

There are two maintenance schedules Export Only that show the **required** service for your vehicle.

First is Schedule **"A"**. It is for vehicles that are not operated under any of the conditions listed under Schedule **"B"**.

Second is Schedule **"B"**. It is for vehicles that are operated under the conditions that are listed below and at the beginning of the schedule.

- Day or night temperatures are below 32° F (0° C).
- Stop and go driving.
- Extensive engine idling.
- Driving in dusty conditions.
- Short trips of less than 10 miles (16 km).
- More than 50% of your driving is at sustained high speeds during hot weather, above 90° F (32° C).◊
- Trailer towing.◊
- Taxi, police, or delivery service (commercial service).◊
- Off-road or desert operation.
- **If equipped for and operating with E-85 (ethanol) fuel.**

NOTE: If ANY of these apply to you then change your engine oil every 3,000 miles (5 000 km) or 3 months, whichever comes first and follow schedule "B" of the "Maintenance Schedules" section of this manual.

NOTE: Most vehicles are operated under the conditions listed for Schedule "B".

Use the schedule that best describes your driving conditions. Where time and mileage are listed, follow the interval that occurs first.

NOTE: Under no circumstances should oil change intervals exceed 6000 miles (10 000 km) or 6 months whichever comes first.

CAUTION: Failure to perform the required maintenance items may result in damage to the vehicle.

At Each Stop for Fuel

- Check the engine oil level about 5 minutes after a fully warmed engine is shut off. Checking the oil level while the vehicle is on level ground will improve the accuracy of the oil level reading. Add oil only when the level is at or below the ADD or MIN mark.
- Check the windshield washer solvent and add if required.

Once a Month

- Check tire pressure and look for unusual wear or damage.
- Inspect the battery and clean and tighten the terminals as required.
- Check the fluid levels of coolant bottle, brake master cylinder and transmission, add as needed.
- Check all lights and all other electrical items for correct operation.
- Check rubber seals on each side of the radiator for proper fit.

At Each Oil Change

- Change the engine oil filter.
- Inspect the exhaust system.
- Inspect the brake linings, hoses and calipers.
- Inspect the CV joints and front and rear suspension components.
- Check the automatic transmission fluid level.
- Check the manual transmission fluid level.
- Check the coolant level, hoses, and clamps.
- Rotate the tires at each oil change interval shown on Schedule "A" 6,000 miles (10 000 km) or every other interval shown on Schedule "B" 6,000 miles (10 000 km).

SCHEDULE A - EXPORT ONLY

Kilometers **(Miles)** **[Months]**	**12 000** **(7,500)** **[6]**	**24 000** **(15,000)** **[12]**	**36 000** **(22,500** **[18]**	**48 000** **(30,000)** **[24]**	**60 000** **(37,500)** **[30]**
Change engine oil and engine oil filter.	X	X	X	X	X
Inspect the **air cleaner filter** and replace if necessary.*	X	X	X	X	
Replace the **air cleaner filter.** *				X	
Replace the **spark plugs** on 2.0 liter engine.				X	
Inspect the front brake pads and rear brake linings, rotors and drums.			X		

MAINTENANCE SCHEDULES (Continued)

SCHEDULE A - EXPORT ONLY

Kilometers **(Miles)** **[Months]**	**72 000** **(45,000)** **[36]**	**84 000** **(52,500)** **[42]**	**96 000** **(60,000)** **[48]**	**108 000** **(67,500)** **[54]**	**120 000** **(75,000)** **[60]**
Change engine oil and engine oil filter.	X	X	X	X	X
Inspect the **air cleaner filter** and replace if required.*	X	X	X		X
Replace the **air cleaner filter.***			X		
Inspect the front brake pads and rear brake linings, rotors, drums.	X			X	
Replace the **spark plugs** on 2.0 liter engine.			X		
Flush and replace engine coolant at 60 months or 160,000 km.			X		
Check and replace, if necessary, the **PCV valve.** *			X		
Replace the **ignition cables** on 2.0 liter engine.			X		
Replace alternator drive belts in 2.7 liter engine.			X		

Kilometers **(Miles)** **[Months]**	**132 000** **(82,000)** **[66]**	**144 000** **(90,000)** **[72]**	**156 000** **(97,500)** **[78]**	**168 000** **(105,000)** **[84]**
Change engine oil and engine oil filter.	X	X	X	X
Inspect the **air cleaner filter** and replace if required.*	X	X		X
Replace the **air cleaner filter.***		X		
Inspect the front brake pads and rear brake linings, rotors.			X	
Replace the **spark plugs** on 2.0 liter engine.			X	
Check and replace, if necessary, the **PCV valve.***‡			X	
Replace the **engine timing belt** on 2.0 liter engine.*				X
Check and retension alternator drive belts on 2.7 liter engine.				X
Replace the drive belts.				X
Flush and replace the engine coolant at 160,000 km if not done at 60 months.				X

* This maintenance is recommended by the manufacture to the owner but is not required to maintain the emissions warranty.

‡ This maintenance is not required if previously replaced.

Inspection and service should also be performed anytime a malfunction is observed or suspected. Retain all receipts.

MAINTENANCE SCHEDULES (Continued)

SCHEDULE B — EXPORT ONLY

Follow schedule "B" if you usually operate your vehicle under one or more of the following conditions. Change the automatic transmission fluid and filter every 48,000 miles (77 000 km) if the vehicle is usually operated under one or more of the conditions marked with an ◊.

- Day or night temperatures are below 32° F (0° C).
- Stop and go driving.
- Extensive engine idling.
- Driving in dusty conditions.
- Short trips of less than 10 miles (16.2 km).
- More than 50% of your driving is at sustained high speeds during hot weather, above 90° F (32° C). ◊
- Trailer towing. ◊
- Taxi, police or delivery service (commercial services). ◊
- Off-road or desert operation.
- **If equipped for and operating with E-85 (ethanol) fuel.**

If **ANY** of these apply to you, change your engine oil every 3,000 miles (5 000 km) or 3 months, whichever comes first, and follow the maintenance recommendations in "Maintenance Schedule B."

Kilometers (Miles)	**5 000 (3,000)**	**10 000 (6,000)**	**14 000 (9,000)**	**19 000 (12,000)**	**24 000 (15,000)**	**29 000 (18,000)**
Change engine oil and engine oil filter.	X	X	X	X	X	X
Inspect the **air cleaner filter** and replace if necessary.*	X	X	X	X	X	X
Inspect the front and rear brake linings and rotors.				X		

Kilometers (Miles)	**34 000 (21,000)**	**38 000 (24,000)**	**43 000 (27,000)**	**48 000 (30,000)**	**53 000 (33,000)**	**58 000 (36,000)**
Change engine oil and engine oil filter.	X	X	X	X	X	X
Inspect the **air cleaner filter** and replace if required.*	X	X	X		X	X
Replace the **air cleaner filter.**				X		
Inspect the front and rear brake linings and rotors.		X				X
Check and replace, if necessary, the **PCV valve.***				X		
Replace the **spark plugs** on 2.0 liter engines.				X		

Kilometers (Miles)	**62 000 (39,000)**	**67 000 (42,000)**	**72 000 (45,000)**	**77 000 (48,000)**	**82 000 (51,000)**	**86 000 (54,000)**
Change engine oil and engine oil filter.	X	X	X	X	X	X
Inspect the **air cleaner filter** and replace if necessary.*	X	X	X	X	X	X
Inspect the front and rear brake linings and rotors.				X		
Change the automatic transmision fluid and filter.				X		

MAINTENANCE SCHEDULES (Continued)

SCHEDULE B — EXPORT ONLY

Kilometers (Miles)	91 000 (57,000)	96 000 (60,000)	101000 (63,000)	106000 (66,000)	110000 (69,000)	115000 (72,000)
Change engine oil and engine oil filter.	X	X	X	X	X	X
Inspect the **air cleaner filter** and replace if necessary.*	X		X	X	X	X
Replace the **air cleaner filter.**		X				
Inspect the front and rear brake linings and rotors.		X				X
Replace the **ignition cables** on 2.0 liter engine.		X				
Replace the accessory drive belts on 2.0 and 2.7 liter engines.		X				
Replace the **spark plugs** on the 2.0 and 2.7 liter engines.		X				

Kilometers (Miles)	120000 (75,000)	125000 (78,000)	130000 (81,000)	134000 (84,000)	139000 (87,000)	144000 (90,000)
Change engine oil and engine oil filter.	X	X	X	X	X	X
Inspect the **air cleaner filter** and replace if necessary.*	X	X	X	X	X	
Replace the **air cleaner filter.***						X
Inspect the front and rear brake linings and rotors.				X		
Check and replace, if necessary, the **PCV valve.***‡						X
Replace the **spark plugs** on 2.0 liter engine.						X
Replace **engine timing belt** on 2.0 liter engines.						X

Kilometers (Miles)	149000 (93,000)	154000 (96,000)	158000 (99,000)	160000 (100,000)	163000 (102,000)	168000 (105,000)
Change engine oil and engine oil filter.	X	X		X	X	X
Inspect the **air cleaner filter** and replace if necessary.*	X	X		X	X	X
Inspect the front and rear brake linings and rotors.		X				
Change the automatic transmission fluid and filter.		X				
Flush and replace the engine coolant at 60 months or 160,000 km.				X		
Replace the **spark plugs** on the 2.7 liter engine.				X		
Check and retension accessory drive belts on 2.7 liter engine						X

* This maintenance is recommended by the manufacture to the owner but is not required to maintain the emissions warranty.

‡ This maintenance is not required if previously replaced.

Inspection and service should also be performed anytime a malfunction is observed or suspected. Retain all receipts.

WARNING: You can be badly injured working on or around a motor vehicle. Do only that service work for which you have the knowledge and the right equipment. If you have any doubt about your ability to perform a service job, take your vehicle to a competent mechanic.

HOISTING

STANDARD PROCEDURE - HOISTING

Refer to Owner's Manual provided with vehicle for proper emergency jacking procedures.

WARNING: THE HOISTING AND JACK LIFTING POINTS PROVIDED ARE FOR A COMPLETE VEHICLE. WHEN THE ENGINE OR REAR SUSPENSION IS REMOVED FROM A VEHICLE, THE CENTER OF GRAVITY IS ALTERED MAKING SOME HOISTING CONDITIONS UNSTABLE. PROPERLY SUPPORT OR SECURE VEHICLE TO HOISTING DEVICE WHEN THESE CONDITIONS EXIST.

CAUTION: Do not position hoisting device on suspension components, damage to vehicle can result. Refer to (Fig. 5), OR (Fig. 6) for proper locations.

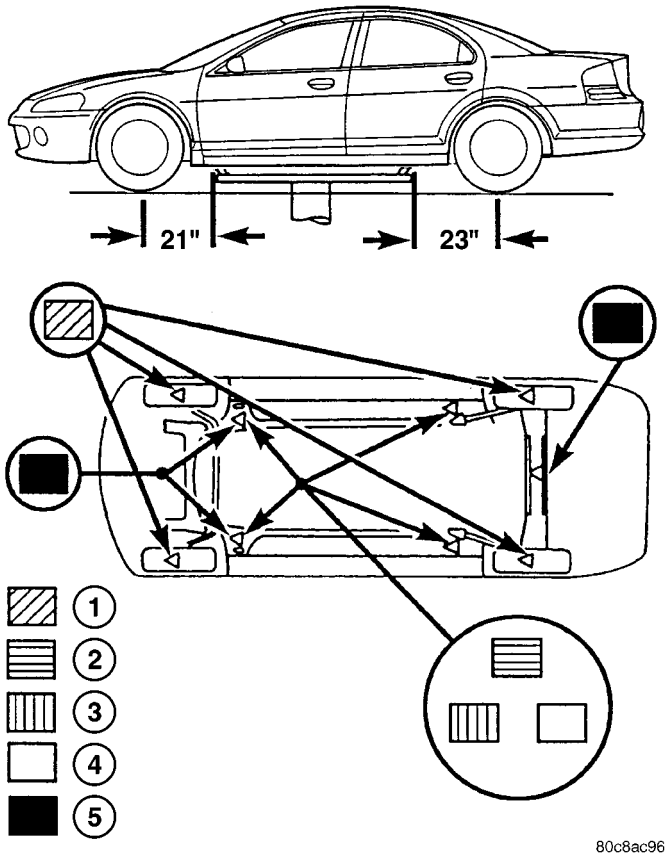

Fig. 5 HOISTING AND JACKING POINTS - JR-41

1 - DRIVE ON LIFT
2 - FRAME CONTACT LIFT (SINGLE POST)
3 - CHASSIS LIFT (DUAL POST)
4 - OUTBOARD LIFT (DUAL LIFT)
5 - FLOOR JACK

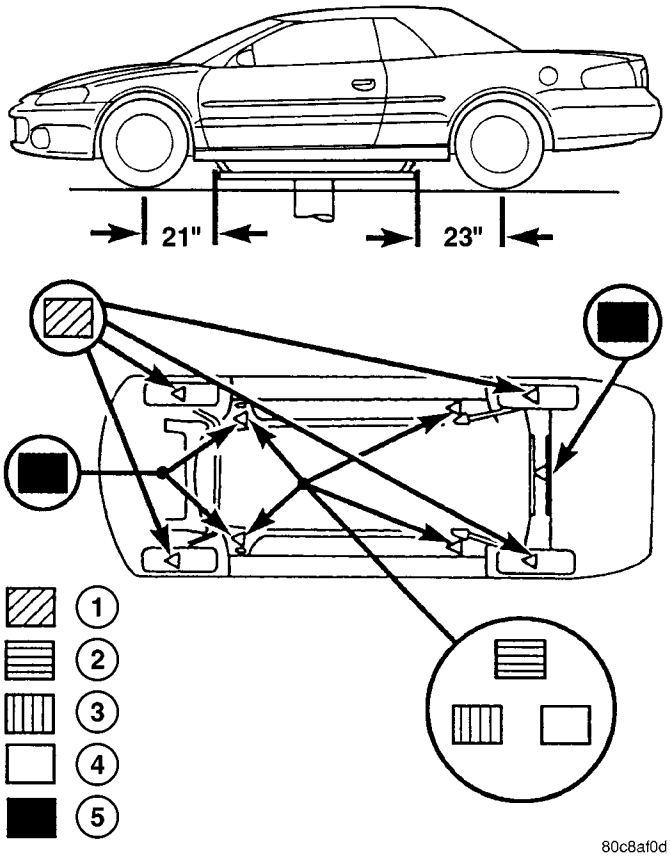

Fig. 6 HOISTING AND JACKING POINTS - JR-27

1 - DRIVE ON LIFT
2 - FRAME CONTACT LIFT (SINGLE POST)
3 - CHASSIS LIFT (DUAL POST)
4 - OUTBOARD LIFT (DUAL LIFT)
5 - FLOOR JACK

JUMP STARTING

STANDARD PROCEDURE - JUMP STARTING

WARNING: DO NOT JUMP START A FROZEN BATTERY, PERSONAL INJURY CAN RESULT. DO NOT JUMP START WHEN MAINTENANCE FREE BATTERY INDICATOR DOT IS YELLOW OR BRIGHT COLOR. DO NOT JUMP START A VEHICLE WHEN THE BATTERY FLUID IS BELOW THE TOP OF LEAD PLATES. DO NOT ALLOW JUMPER CABLE CLAMPS TO TOUCH EACH OTHER WHEN CONNECTED TO A BOOSTER SOURCE. DO NOT USE OPEN FLAME NEAR BATTERY. REMOVE METALLIC JEWELRY WORN ON HANDS OR WRISTS TO AVOID INJURY BY ACCIDENTAL ARCING OF BATTERY CURRENT. WHEN USING A HIGH OUTPUT BOOSTING DEVICE, DO NOT ALLOW BATTERY VOLTAGE TO EXCEED 16 VOLTS. REFER TO INSTRUCTIONS PROVIDED WITH DEVICE BEING USED.

JUMP STARTING (Continued)

CAUTION: When using another vehicle as a booster, do not allow vehicles to touch. Electrical systems can be damaged on either vehicle.

TO JUMP START A DISABLED VEHICLE:

(1) Raise hood on disabled vehicle and visually inspect engine compartment for:

- Battery cable clamp condition, clean if necessary.
- Frozen battery.
- Yellow or bright color test indicator, if equipped.
- Low battery fluid level.
- Generator drive belt condition and tension.
- Fuel fumes or leakage, correct if necessary.

CAUTION: If the cause of starting problem on disabled vehicle is severe, damage to booster vehicle charging system can result.

(2) When using another vehicle as a booster source, park the booster vehicle within cable reach. Turn off all accessories, set the parking brake, place the automatic transmission in PARK or the manual transmission in NEUTRAL and turn the ignition OFF.

(3) On disabled vehicle, place gear selector in park or neutral and set park brake. Turn off all accessories.

(4) Connect jumper cables to booster battery. RED clamp to positive terminal (+). BLACK clamp to negative terminal (-). DO NOT allow clamps at opposite end of cables to touch, electrical arc will result. Review all warnings in this procedure.

(5) On disabled vehicle, connect RED jumper cable clamp to positive (+) terminal. Connect BLACK jumper cable clamp to engine ground as close to the ground cable attaching point as possible (Fig. 7).

(6) Start the engine in the vehicle which has the booster battery, let the engine idle a few minutes, then start the engine in the vehicle with the discharged battery.

CAUTION: Do not crank starter motor on disabled vehicle for more than 15 seconds, starter will overheat and could fail.

(7) Allow battery in disabled vehicle to charge to at least 12.4 volts (75% charge) before attempting to start engine. If engine does not start within 15 seconds, stop cranking engine and allow starter to cool (15 minutes), before cranking again.

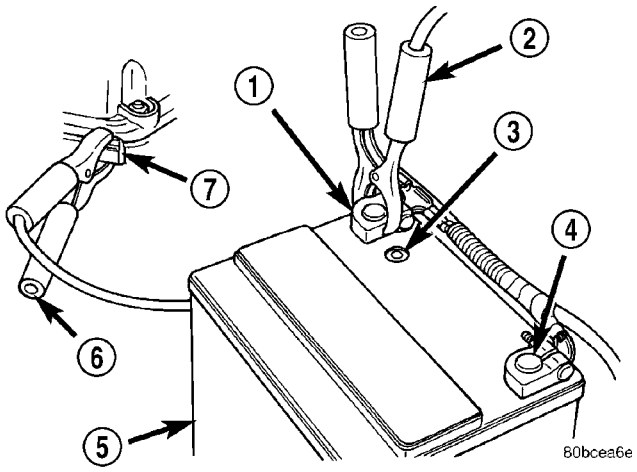

Fig. 7 Jumper Cable Clamp Connections

1 - BATTERY POSITIVE CABLE
2 - POSITIVE JUMPER CABLE
3 - TEST INDICATOR
4 - BATTERY NEGATIVE CABLE
5 - BATTERY
6 - NEGATIVE JUMPER CABLE
7 - ENGINE GROUND

DISCONNECT CABLE CLAMPS AS FOLLOWS:

- Disconnect BLACK cable clamp from engine ground on disabled vehicle.
- When using a Booster vehicle, disconnect BLACK cable clamp from battery negative terminal. Disconnect RED cable clamp from battery positive terminal.
- Disconnect RED cable clamp from battery positive terminal on disabled vehicle.

TOWING

STANDARD PROCEDURE - TOWING

WARNINGS AND PRECAUTIONS

WARNING: DO NOT ALLOW TOWING ATTACHMENT DEVICES TO CONTACT THE FUEL TANK OR LINES, FUEL LEAK CAN RESULT. DO NOT LIFT OR TOW VEHICLE BY FRONT OR REAR BUMPER, OR BUMPER ENERGY ABSORBER UNITS. DO NOT VENTURE UNDER A LIFTED VEHICLE IF NOT SUPPORTED PROPERLY ON SAFETY STANDS. DO NOT ALLOW PASSENGERS TO RIDE IN A TOWED VEHICLE. USE A SAFETY CHAIN THAT IS INDEPENDENT FROM THE TOWING ATTACHMENT DEVICE.

TOWING (Continued)

CAUTION: Do not damage brake lines, exhaust system, shock absorbers, sway bars, or any other under vehicle components when attaching towing device to vehicle. Do not attach towing device to front or rear suspension components. Do not secure vehicle to towing device by the use of front or rear suspension or steering components. Remove or secure loose or protruding objects from a damaged vehicle before towing. Refer to state and local rules and regulations before towing a vehicle. Do not allow weight of towed vehicle to bear on lower fascia, air dams, or spoilers.

RECOMMENDED TOWING EQUIPMENT

To avoid damage to bumper fascia and air dams use of a flat bed towing device or wheel lift (Fig. 8) is recommended. When using a wheel lift towing device, be sure the unlifted end of disabled vehicle has at least 100 mm (4 in.) ground clearance. If minimum ground clearance cannot be reached, use a towing dolly. If a flat bed device is used, the approach angle should not exceed 15 degrees.

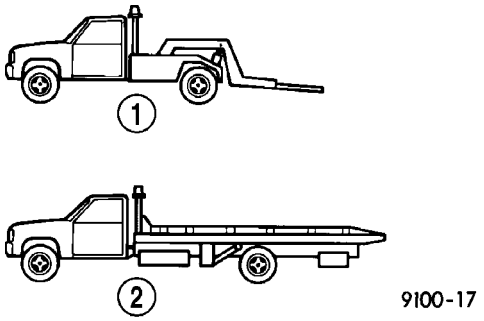

Fig. 8 Recommended Towing Equipment

1 - WHEEL LIFT
2 - FLAT BED

GROUND CLEARANCE

CAUTION: If vehicle is towed with wheels removed, install lug nuts to retain brake drums or rotors.

A towed vehicle should be raised until the lifted wheels are a minimum 100 mm (4 in.) from the ground. Be sure there is at least 100 mm (4 in.) clearance between the tail pipe and the ground. If necessary, remove the wheels from the lifted end of the vehicle and lower the vehicle closer to the ground, to increase the ground clearance at the rear of the vehicle. Install lug nuts on wheel attaching studs to retain brake drums or rotors.

LOCKED VEHICLE TOWING

When a locked vehicle must be towed with the front wheels on the ground, use a towing dolly or flat bed hauler.

FLAT TOWING WITH TOW BAR

- Three speed automatic transaxle vehicles can be flat towed at speeds not to exceed 40 km/h (25 mph) for not more than 25 km (15 miles). The steering column must be unlocked and gear selector in neutral.
- Five speed manual transaxle vehicles can be flat towed at any legal highway speed for extended distances. The gear selector must be in the neutral position.

FLAT BED TOWING TIE DOWNS

CAUTION: Do not tie vehicle down by attaching chains or cables to suspension components or engine mounts, damage to vehicle can result.

JR vehicles can be tied to a flat bed device using the reinforced loops located under the front and rear bumpers on the drivers side of the vehicle. There are also four reinforced elongated holes for T or R hooks located on the bottom of the front frame rail torque boxes behind the front wheels and forward of the rear wheels inboard of the rocker panel weld seam.

TOWING – FRONT WHEEL LIFT

DaimlerChrysler Corporation recommends that a vehicle be towed with the front end lifted, whenever possible. A 90 cm (36 in.) length of 4x4 wood beam can be placed between the wheel lift device and the bottom of the fascia to prevent damage to vehicle during the lifting operation. The beam can removed after lifting the front of the vehicle.

TOWING – REAR WHEEL LIFT

If a vehicle cannot be towed with the front wheels lifted, the rear wheels can be lifted provided the following guide lines are observed.

CAUTION: Do not use steering column lock to secure steering wheel during towing operation.

- Unlock steering column and secure steering wheel in straight ahead position with a clamp device designed for towing.
- Place front wheels on a towing dolly.

SUSPENSION

TABLE OF CONTENTS

page

SUSPENSION
STANDARD PROCEDURE - LUBRICATION POINTS 1
FRONT SUSPENSION 2
REAR SUSPENSION 32
WHEEL ALIGNMENT 52

SUSPENSION

STANDARD PROCEDURE - LUBRICATION POINTS

There are no serviceable lubrication points on the suspension of this vehicle. All joints are sealed-for-life type and require no maintenance.

FRONT SUSPENSION

TABLE OF CONTENTS

page

FRONT SUSPENSION
DESCRIPTION - FRONT SUSPENSION 3
OPERATION - FRONT SUSPENSION 4
WARNING 4
CAUTION 4
SPECIFICATIONS
FRONT SUSPENSION FASTENER TORQUE . . 4
SPECIAL TOOLS
FRONT SUSPENSION 5
HUB / BEARING
DESCRIPTION 6
OPERATION 6
DIAGNOSIS AND TESTING - HUB AND BEARING 6
REMOVAL 6
INSTALLATION 7
KNUCKLE
DESCRIPTION 8
OPERATION 8
DIAGNOSIS AND TESTING - STEERING KNUCKLE 8
REMOVAL 8
INSTALLATION 10
LOWER BALL JOINT
DESCRIPTION 11
DIAGNOSIS AND TESTING - LOWER BALL JOINT 11
LOWER BALL JOINT SEAL BOOT
REMOVAL 11
INSTALLATION 12
LOWER CONTROL ARM
DESCRIPTION 14
OPERATION 14
DIAGNOSIS AND TESTING - LOWER CONTROL ARM 14
REMOVAL 14
DISASSEMBLY
DISASSEMBLY - FRONT ISOLATOR BUSHING 17
DISASSEMBLY - REAR ISOLATOR BUSHING 17
DISASSEMBLY - CLEVIS BUSHING 17
ASSEMBLY
ASSEMBLY - FRONT ISOLATOR BUSHING . . 18
ASSEMBLY - REAR ISOLATOR BUSHING . . . 18
ASSEMBLY - CLEVIS BUSHING 19
INSTALLATION 19
SHOCK ASSEMBLY
DESCRIPTION - SHOCK ASSEMBLY 21
OPERATION - SHOCK ASSEMBLY 22
DIAGNOSIS AND TESTING - SHOCK ASSEMBLY (FRONT) 22
REMOVAL - SHOCK ASSEMBLY 22
DISASSEMBLY - SHOCK ASSEMBLY 24
ASSEMBLY - SHOCK ASSEMBLY 26
INSTALLATION - SHOCK ASSEMBLY 28
STABILIZER BAR
DESCRIPTION 28
OPERATION 29
DIAGNOSIS AND TESTING - STABILIZER BAR . 29
REMOVAL
REMOVAL - STABILIZER BAR 29
REMOVAL - STABILIZER BAR BUSHING (FRONT) 29
INSTALLATION
INSTALLATION - STABILIZER BAR 30
INSTALLATION - STABILIZER BAR BUSHING 30
UPPER BALL JOINT
DESCRIPTION 30
DIAGNOSIS AND TESTING - UPPER BALL JOINT 30
UPPER CONTROL ARM
DESCRIPTION 30
OPERATION 30
REMOVAL - UPPER CONTROL ARM 31
INSPECTION - UPPER CONTROL ARM 31
INSTALLATION - UPPER CONTROL ARM 31

FRONT SUSPENSION

DESCRIPTION - FRONT SUSPENSION

This vehicle's front suspension is a short long arm (SLA) design used in conjunction with a gas pressurized shock absorber and coil spring assembly (Fig. 1).

SLA offers three advantages over the customary MacPherson strut system for front-wheel-drive vehicles.

- Better handling through geometry that keeps the tires more perpendicular to the road
- Better noise isolation
- Better ride through reduced friction

The upper control arm of the vehicle is mounted using rubber isolation bushings to an aluminum casting which is attached to the shock tower using 4 mounting bolts. This aluminum casting is also used as the upper mount for the front shock/coil spring assembly. The shock absorber is isolated from the aluminum bracket using a microcellular urethane isolator. The lower control arm is mounted to the vehicle's front suspension crossmember using 2 through bolts per control arm. The lower control arm is also isolated from the vehicle using 2 rubber bushings of unique design for the front and rear mounting location. The bottom of the shock absorber is mounted to the lower control arm by a clevis bracket which is part of the shock absorber assembly. The clevis bracket is mounted to and isolated from the lower control arm using a rubber isolation bushing and a through-bolt. The front steering knuckle is mounted to the vehicle by a ball joint located in the upper and lower control arms.

A sealed for life front hub and bearing assembly is attached to the front steering knuckle. The outer C/V joint assembly is splined to the front hub and bearing assembly and is retained by a nut, nut retainer and cotter pin.

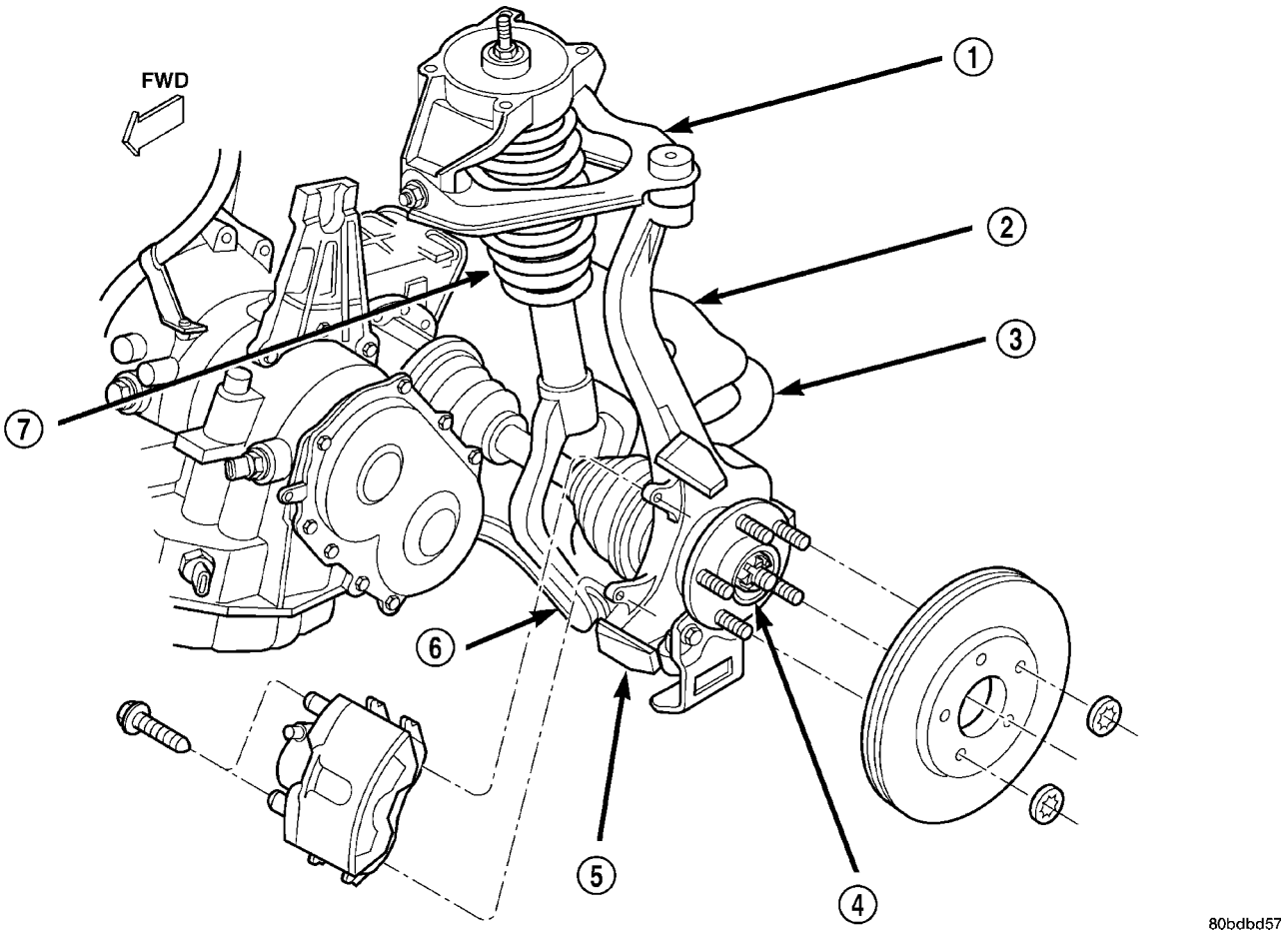

Fig. 1 Front Suspension Components (Typical)

1 - UPPER CONTROL ARM
2 - FRONT SUSPENSION CROSSMEMBER
3 - STABILIZER BAR
4 - HUB AND BEARING
5 - STEERING KNUCKLE
6 - LOWER CONTROL ARM
7 - SHOCK ASSEMBLY

FRONT SUSPENSION (Continued)

OPERATION - FRONT SUSPENSION

The front suspension allows each front wheel on vehicle to adapt to different road surfaces and conditions without affecting the control of the vehicle. Each side of the front suspension is allowed to move independently from the other. Both sides of the front suspension are allowed to pivot so the vehicle can be steered in the direction preferred. Steering of the vehicle is provided by a rack and pinion steering gear which is connected directly to each steering knuckle by an outer tie rod.

WARNING

WARNING: DO NOT REMOVE A SHOCK ROD NUT WHILE THE SHOCK ASSEMBLY IS INSTALLED IN VEHICLE, OR BEFORE THE SHOCK ASSEMBLY SPRING IS COMPRESSED.

CAUTION

CAUTION: Only frame contact hoisting equipment should be used on this vehicle. All vehicles have a fully independent rear suspension. Vehicles must not be hoisted using equipment designed to lift a vehicle by the rear axle. If this type of hoisting equipment is used, damage to rear suspension components will occur.

CAUTION: At no time when servicing a vehicle, can a sheet metal screw, bolt or other metal fastener be installed in the shock tower to take the place of an original plastic clip. Also, NO holes can be drilled into the front shock tower in the area shown in (Fig. 2), for the installation of any metal fasteners into the shock tower. Because of the minimum clearance in this area installation of metal fasteners could damage the coil spring coating and lead to a corrosion failure of the spring.

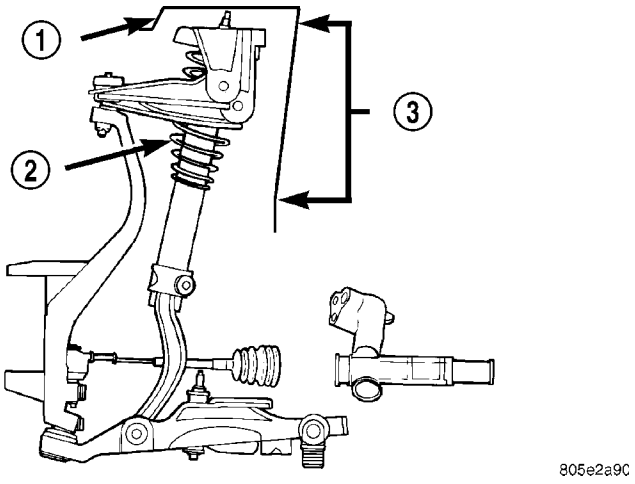

Fig. 2 Shock Tower To Spring Minimum Clearance Area

1 - SHOCK TOWER
2 - COIL SPRING
3 - NO SHEET METAL SCREWS, BOLTS, OR ANY OTHER METAL FASTENERS ARE TO BE INSTALLED IN SHOCK TOWER AREA. ALSO, NO HOLES ARE TO BE DRILLED INTO SHOCK TOWER IN THIS SAME AREA.

NOTE: If a suspension component becomes bent, damaged or fails, no attempt should be made to straighten or repair it. Always replace it with a new component.

SPECIFICATIONS

FRONT SUSPENSION FASTENER TORQUE

DESCRIPTION	TORQUE
Shock Assembly	
Clevis Pinch Bolt	88 N·m (65 ft. lbs.)
Shock Tower Bolts	101 N·m (75 ft. lbs.)
Clevis To Control Arm Bolt	88 N·m (65 ft. lbs.)
Rod To Upper Mount Nut	54 N·m (40 ft. lbs.)
Steering Knuckle	
Disc Brake Caliper Adapter Bolts	108 N·m (80 ft. lbs.)
Tie Rod Nut	61 N·m (45 ft. lbs.)
Tie Rod Adjustment Jam Nuts	61 N·m (45 ft. lbs.)
Hub And Bearing	
Axle Hub Nut	203 N·m (150 ft. lbs.)
Wheel Stud Lug Nut	135 N.m (100 ft. lbs.)
Upper Control Arm	
Ball Joint Stud Nut	27 N·m (20 ft. lbs.)
Shock Bracket Bolt	90 N·m (66 ft. lbs.)
Lower Control Arm	
Ball Joint Stud Castle Nut	74 N·m (55 ft. lbs.)
Crossmember Front Pivot Bolt	183 N·m (135 ft. lbs.)
Crossmember Rear Bolt	95 N·m (70 ft. lbs.)
Ball Joint Heat Shield Attaching Bolts	13 N·m (10 ft. lbs.)
Stabilizer Bar	
Bushing Clamp Bolts	61 N·m (45 ft. lbs.)
Link Nuts	101 N·m (75 ft. lbs.)

FRONT SUSPENSION (Continued)

SPECIAL TOOLS

FRONT SUSPENSION

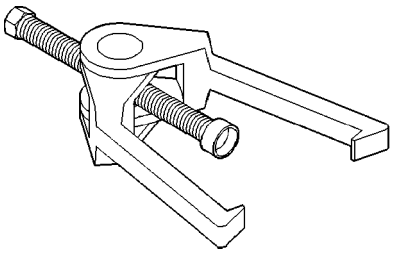

Puller C-3894-A

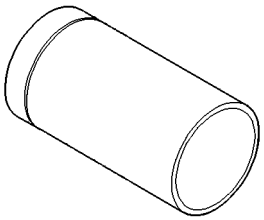

Installer, Ball Joint 6758

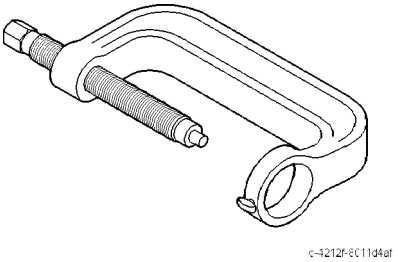

Press, Ball Joint Remover/Installer C-4212F

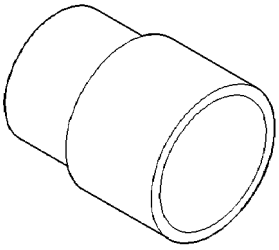

Remover, Ball Joint MB-990799

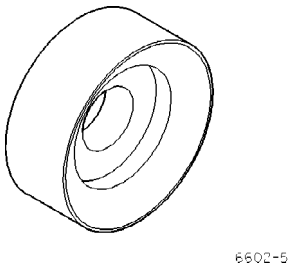

Remover/Installer Control Arm Bushing 6602–5 (In Tool Kit 6602)

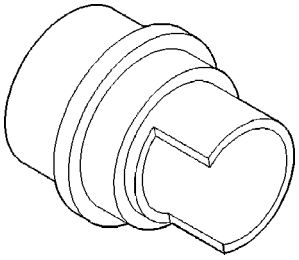

Installer/Receiver, Control Arm Bushing 6876

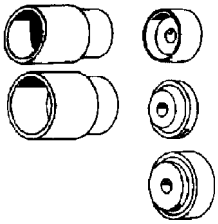

Remover / Installer C-4366-2 (In Tool Kit C-4366)

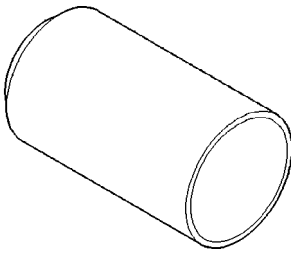

Receiver, Ball Joint 6756

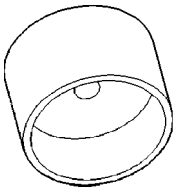

Installer, Bushing 6760

FRONT SUSPENSION (Continued)

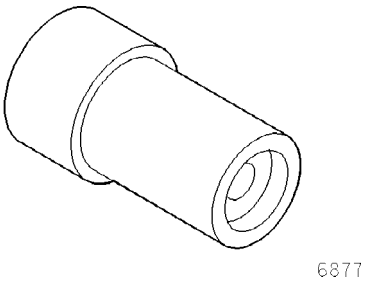

Remover/Installer Control Arm Clevis Bushing 6877

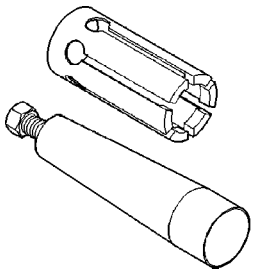

Installer, Ball Joint Seal Boot Retainer 6875

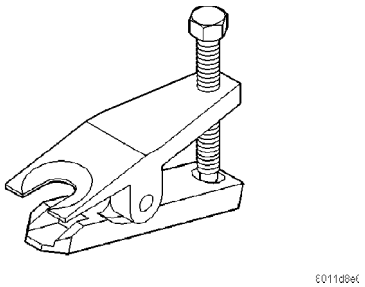

Remover, Tie Rod

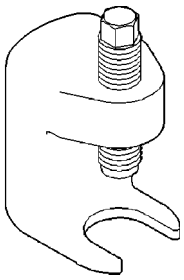

Remover, Lower Ball Joint C-4150A

HUB / BEARING

DESCRIPTION

The bearing used on the front hub of this vehicle is the combined hub and bearing unit type assembly. This unit combines the front wheel mounting hub (flange) and the front wheel bearing into a one piece unit. The hub and bearing assembly is mounted to the steering knuckle and is retained by three mounting bolts accessible from the back of the steering knuckle. The hub and bearing unit is not serviceable and must be replaced as an assembly if the bearing or the hub is determined to be defective. The wheel mounting studs used to mount the tire and wheel to the vehicle are the only replaceable components of the hub and bearing assembly.

OPERATION

The hub and bearing has internal bearings that allow the hub to rotate with the driveshaft and tire and wheel.

DIAGNOSIS AND TESTING - HUB AND BEARING

The hub and bearing is designed for the life of the vehicle and requires no type of periodic maintenance. The following procedure may be used for diagnosing the condition of the wheel bearing and hub.

With the wheel, disc brake caliper, and brake rotor removed, rotate the wheel hub. Any roughness or resistance to rotation may indicate dirt intrusion or a failed hub bearing. If the bearing exhibits any of these conditions during diagnosis, the hub bearing will require replacement. The bearing is not serviceable.

Damaged bearing seals and the resulting excessive grease loss may also require bearing replacement. Moderate grease weapage from the bearing is considered normal and should not require replacement of the wheel bearing.

To diagnose a bent hub, (Refer to 2 - BRAKES/HYDRAULIC-MECHANICAL/ROTOR - DIAGNOSIS AND TESTING).

REMOVAL

(1) Raise vehicle. (Refer to LUBRICATION & MAINTENANCE/JUMP STARTING - STANDARD PROCEDURE).

(2) Remove front tire and wheel assembly.

CAUTION: Wheel bearing damage will result if hub nut is loose, then vehicle is rolled on the ground or the weight of the vehicle is allowed to be supported by the tires.

(3) Loosen hub nut with brakes applied. **The hub and driveshaft are splined together through the knuckle (bearing) and retained by the hub nut.**

(4) Remove disc brake caliper, adapter, shoes and rotor from steering knuckle. (Refer to 5 - BRAKES/HYDRAULIC/MECHANICAL/ROTOR - REMOVAL)

(5) If equipped with antilock brakes, remove bolt securing wheel speed sensor cable routing bracket to steering knuckle (Fig. 3).

(6) Remove nut from upper ball joint stud.

(7) Remove upper ball joint stud from steering knuckle using Puller, Special Tool, C-3894-A (Fig. 4).

HUB / BEARING (Continued)

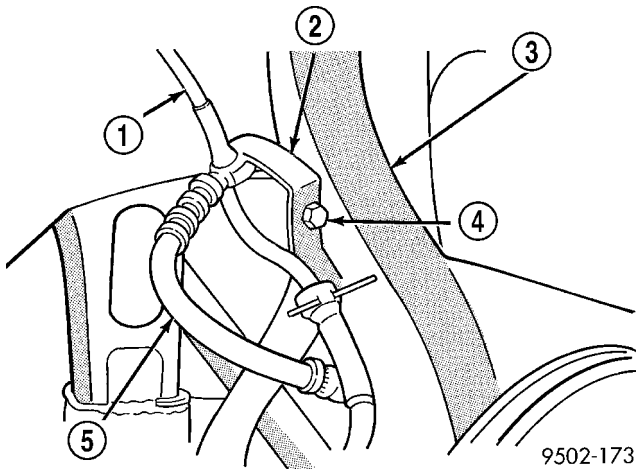

Fig. 3 Speed Sensor Cable Routing Bracket

1 - WHEEL SPEED SENSOR CABLE
2 - SPEED SENSOR CABLE ROUTING BRACKET
3 - STEERING KNUCKLE
4 - ATTACHING BOLT
5 - BRAKE CALIPER FLEX HOSE

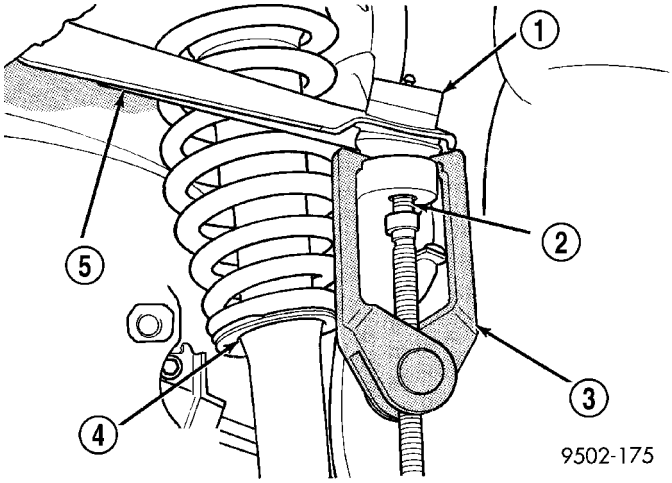

Fig. 4 Ball Joint Stud Removal From Steering Knuckle

1 - BALL JOINT
2 - BALL JOINT STUD
3 - SPECIAL TOOL C-3894-A
4 - SHOCK ABSORBER ASSEMBLY
5 - UPPER CONTROL ARM

NOTE: Care must be taken not to separate driveshaft inner C/V joint during the following steps. Do not allow driveshaft to hang by inner C/V joint; driveshaft must be supported.

(8) Separate steering knuckle (hub and bearing) from outer C/V joint by tipping top of steering knuckle outward while sliding outer C/V joint out rear of hub and bearing. Once separated, support outer end of driveshaft with wire hanger or cord to avoid damaging inner C/V joint.

(9) Remove 3 bolts attaching the hub and bearing assembly to steering knuckle (Fig. 5).

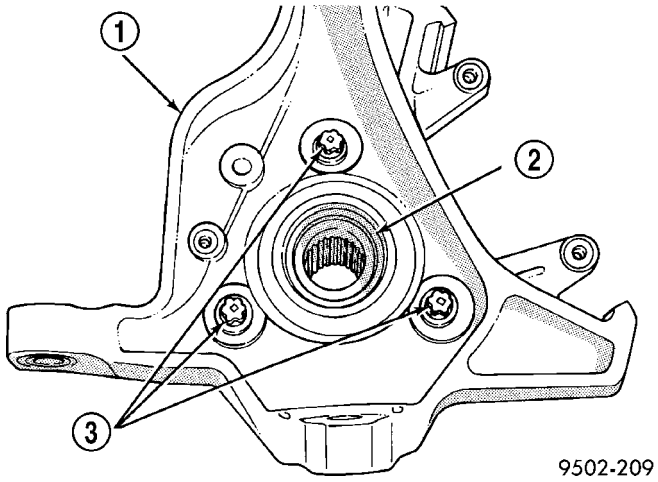

Fig. 5 Hub And Bearing Attaching Bolts

1 - STEERING KNUCKLE
2 - HUB AND BEARING ASSEMBLY
3 - ATTACHING BOLTS

(10) Remove hub and bearing assembly from front of steering knuckle.

NOTE: If bearing will not come out of steering knuckle, it can be tapped out using a soft faced hammer.

INSTALLATION

(1) Thoroughly clean all hub and bearing assembly mounting surfaces on steering knuckle.

(2) Install hub and bearing assembly in steering knuckle aligning bolt boles in bearing flange with holes in steering knuckle.

(3) Install 3 mounting bolts (Fig. 5) and tighten evenly to ensure bearing is square to face of steering knuckle. Tighten mounting bolts to 110 N·m (80 ft. lbs.) torque.

(4) Slide driveshaft outer C/V into front hub and bearing assembly.

(5) Install steering knuckle onto upper ball joint stud and install nut.

(6) Using a crow foot and torque wrench, tighten upper ball joint nut to 27 N·m (20 ft. lbs.) torque.

(7) If equipped with antilock brakes, install wheel speed sensor cable routing bracket on steering knuckle (Fig. 3). Install and tighten mounting bolt to 12 N·m (105 in. lbs.) torque.

(8) Install brake rotor, and caliper, shoes and adapter assembly. (Refer to 5 - BRAKES/HYDRAULIC/MECHANICAL/ROTOR - INSTALLATION)

(9) Clean all foreign matter from threads of outer C/V joint stub axle.

HUB / BEARING (Continued)

(10) Install hub nut on C/V joint stub axle threads. With vehicle brakes applied to keep stub axle from turning, tighten hub nut to 203 N·m (150 ft. lbs.) torque.

(11) Install wheel and tire assembly. Install wheel mounting nuts and progressively tighten in crisscross sequence. Tighten nuts to a torque of 135 N·m (100 ft. lbs.).

(12) Lower vehicle.

(13) Set front toe on vehicle to required specification. (Refer to 2 - SUSPENSION/WHEEL ALIGNMENT - STANDARD PROCEDURE).

KNUCKLE

DESCRIPTION

The steering knuckle is a single casting with legs machined for attachment to the vehicle's upper and lower control arm ball joints. the steering knuckle has the hub and bearing mounted in its center. The axle shaft constant velocity joint stub shaft is splined through the hub and bearing assembly in the center of the knuckle. The steering knuckle also supports and aligns the front brake caliper adapter and caliper assembly.

OPERATION

The steering knuckle pivots between the upper and lower ball joints. The steering gear outer tie rod end connects to the trailing end of each knuckle, allowing the vehicle to be steered.

The center of the knuckle supports the hub and bearing and axle shaft.

DIAGNOSIS AND TESTING - STEERING KNUCKLE

The front suspension steering knuckle is not a repairable component of the front suspension. It must be replaced if found to be damaged in any way. If it is determined that the steering knuckle is bent when servicing the vehicle, no attempt is to be made to straighten the steering knuckle.

REMOVAL

(1) Raise vehicle. (Refer to LUBRICATION & MAINTENANCE/HOISTING - SERVICE PROCEDURE).

(2) Remove front tire and wheel assembly from hub.

CAUTION: Wheel bearing damage will result if hub nut is loosened, then vehicle is rolled on the ground or the weight of the vehicle is allowed to be supported by the tires.

(3) Loosen hub nut with brakes applied.**The hub and driveshaft are splined together through the knuckle (bearing) and retained by the hub nut.**

(4) Remove disc brake caliper, adapter, shoes and rotor from steering knuckle. (Refer to 5 - BRAKES/HYDRAULIC/MECHANICAL/ROTORS - REMOVAL)

(5) Remove nut attaching outer tie rod to steering knuckle (Fig. 6). **Remove nut from tie rod by holding tie rod stud with a socket while loosening and removing nut with wrench (Fig. 6).**

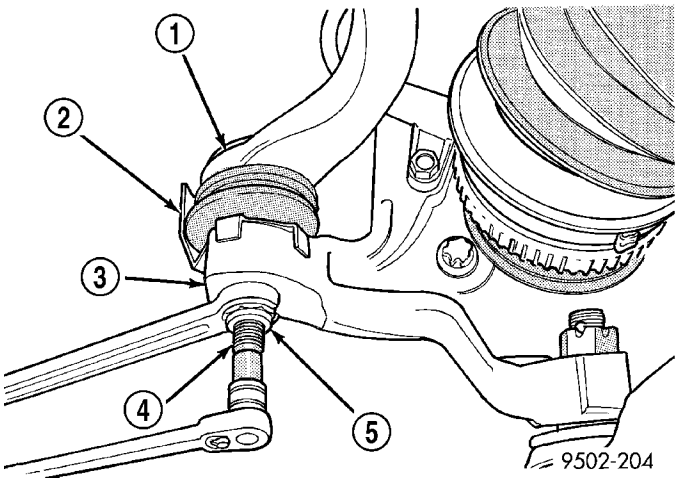

Fig. 6 Outer Tie Rod Attaching Nut

1 - TIE ROD
2 - HEAT SHIELD
3 - STEERING KNUCKLE
4 - TIE ROD STUD
5 - NUT

(6) Remove the tie rod end from the steering knuckle using Remover, Special Tool C-3894-A.

(7) Remove ABS wheel speed sensor cable routing bracket from steering knuckle (Fig. 7).

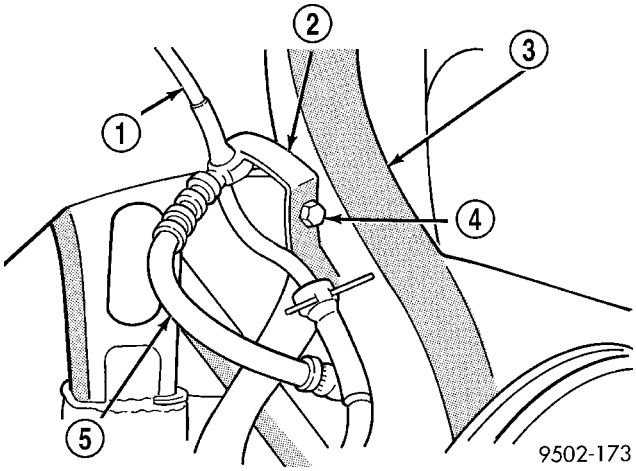

Fig. 7 Speed Sensor Cable Routing Bracket

1 - WHEEL SPEED SENSOR CABLE
2 - SPEED SENSOR CABLE ROUTING BRACKET
3 - STEERING KNUCKLE
4 - ATTACHING BOLT
5 - BRAKE CALIPER FLEX HOSE

KNUCKLE (Continued)

(8) Remove cotter pin and castle nut from lower ball joint stud (Fig. 8).

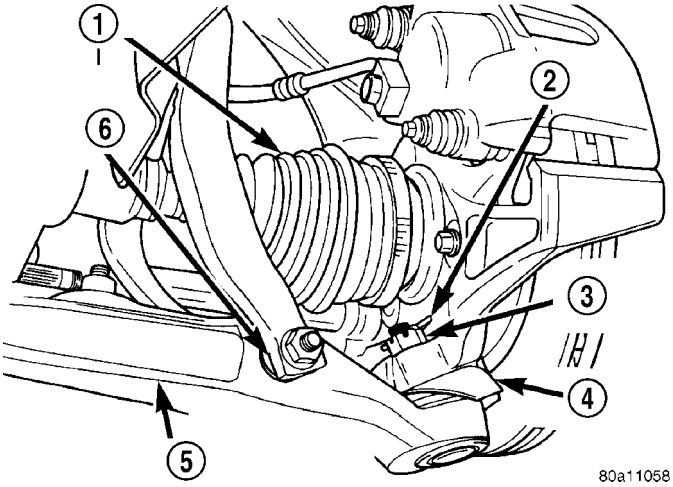

Fig. 8 Lower Ball Joint Attachment To Steering Knuckle

1 - DRIVESHAFT
2 - COTTER PIN
3 - CASTLE NUT
4 - HEAT SHIELD
5 - LOWER CONTROL ARM
6 - SHOCK ABSORBER CLEVIS

CAUTION: No tool is to be inserted between the steering knuckle and the lower ball joint to separate stud of lower ball joint from the steering knuckle. The steering knuckle is to be separated from the stud of the ball joint only using the procedure as described in Step 9 below.

CAUTION: When striking the steering knuckle, do not hit the heat shield covering the ball joint grease seal. Bending the heat shield against the ball joint grease seal will cause the grease seal to fail.

(9) Turn steering knuckle so front of it is facing as far outboard in wheel well as possible. Using a hammer, strike boss on steering knuckle (Fig. 9) until steering knuckle separates from lower ball joint stud.

CAUTION: Care must be taken not to separate the inner C/V joint during the following steps. Pulling steering knuckle out from vehicle after releasing from ball joint can separate inner C/V joint, thus damaging it. Do not allow driveshaft to hang by inner C/V joint; driveshaft must be supported upon removal from knuckle.

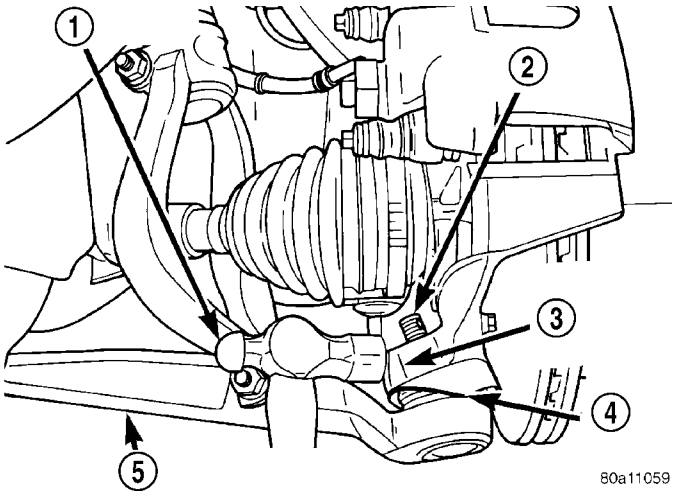

Fig. 9 Separating Ball Joint Stud From Steering

1 - HAMMER
2 - BALL JOINT STUD
3 - STEERING KNUCKLE BOSS
4 - HEAT SHIELD
5 - LOWER CONTROL ARM

(10) Lift up on steering knuckle separating it from lower ball joint stud. **Use caution when separating ball joint stud from steering knuckle so ball joint seal does not get cut.**

(11) Separate steering knuckle from outer C/V joint. Separate steering knuckle from outer C/V joint holding driveshaft in place while pulling steering knuckle away from outer C/V joint (Fig. 10).

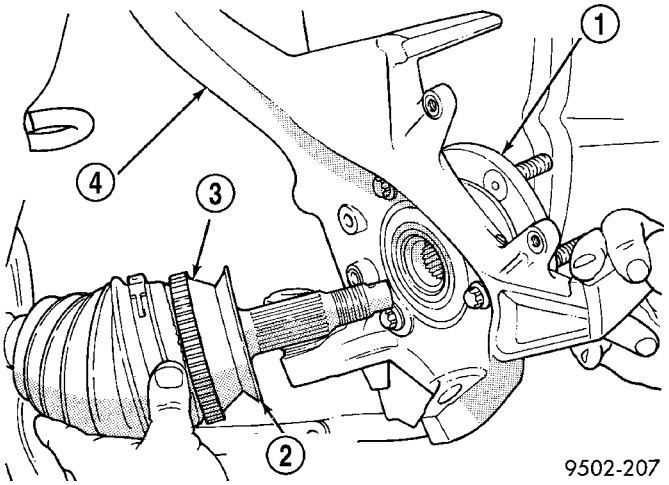

Fig. 10 Separating Steering knuckle from driveshaft

1 - HUB/BEARING
2 - BEARING SHIELD
3 - OUTER C/V JOINT
4 - STEERING KNUCKLE

KNUCKLE (Continued)

(12) Remove nut from upper ball joint stud.

(13) Remove upper ball joint stud from steering knuckle using Puller, Special Tool, C-3894-A (Fig. 11).

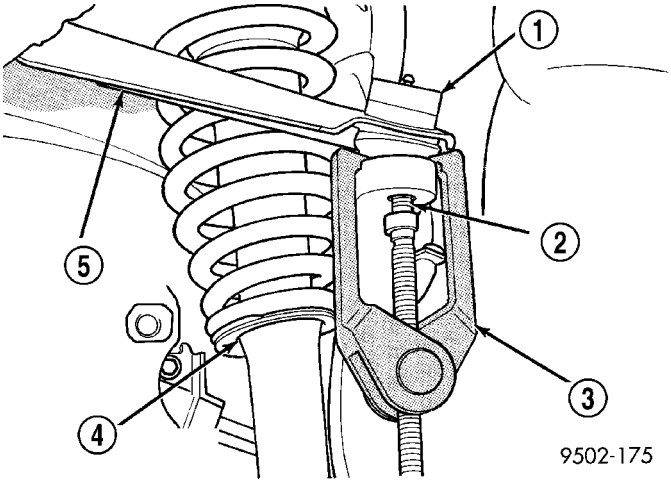

Fig. 11 Ball Joint Stud Removal From Steering Knuckle

1 - BALL JOINT
2 - BALL JOINT STUD
3 - SPECIAL TOOL C-3894-A
4 - SHOCK ABSORBER ASSEMBLY
5 - UPPER CONTROL ARM

(14) Remove steering knuckle from vehicle.

(15) If necessary, remove lower ball joint grease seal heat shield on steering knuckle.

(16) If steering knuckle is being replaced and hub and bearing is found to be in usable condition, it can be transferred to replacement steering knuckle. To remove the hub and bearing, (Refer to 2 - SUSPENSION/FRONT/HUB / BEARING - REMOVAL).

INSTALLATION

(1) If required, install hub/bearing assembly into steering knuckle before installing steering knuckle on vehicle. (Refer to 2 - SUSPENSION/FRONT/HUB / BEARING - INSTALLATION)

(2) If removed, install lower ball joint grease seal heat shield on steering knuckle.

(3) Slide driveshaft into front hub/bearing assembly as steering knuckle is installed onto lower ball joint stud.

(4) Install lower ball joint castle nut. Do not tighten at this time.

(5) Install upper ball joint in steering knuckle. Install upper ball joint nut. Tighten upper ball joint nut to 27 N·m (20 ft. lbs.) torque.

(6) Using a crowfoot and torque wrench, tighten the lower ball joint nut 75 N·m (55 ft. lbs.) torque (Fig. 8). Install cotter pin.

(7) Install wheel speed sensor cable routing bracket on steering knuckle (Fig. 7) and securely tighten attaching bolt.

CAUTION: When installing tie rod on steering knuckle, the heat shield (Fig. 12) must be installed. If heat shield is not installed, tie rod seal boot can fail due to excessive heat from brake rotor.

(8) Install outer tie rod stud into steering knuckle. Start outer tie rod attaching nut onto tie rod stud. While holding stud of tie rod stationary, tighten nut using a crowfoot and socket to 61 N·m (45 ft. lbs.) torque (Fig. 12).

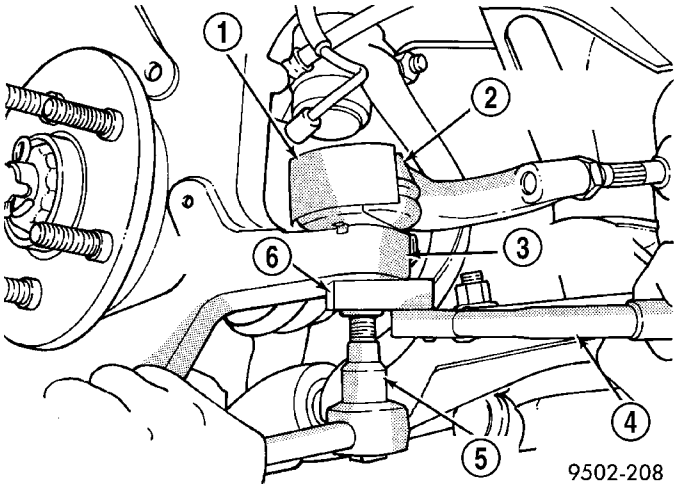

Fig. 12 Torquing Tie Rod Attaching Nut

1 - HEAT SHIELD
2 - OUTER TIE ROD
3 - STEERING KNUCKLE
4 - TORQUE WRENCH
5 - 11/32 SOCKET
6 - CROWFOOT

(9) Install brake rotor, and caliper, shoes and adapter assembly. (Refer to 5 - BRAKES/HYDRAULIC/MECHANICAL/ROTORS - INSTALLATION)

(10) Clean all foreign matter from threads of outer C/V joint stub axle. Install hub nut onto driveshaft stub axle. With vehicle brakes applied to keep braking disc from turning, tighten hub nut to 203 N·m (150 ft. lbs.) torque.

(11) Install front wheel and tire assembly. Install front wheel lug nuts and progressively tighten in crisscross sequence to 135 N·m (100 ft. lbs.) torque.

(12) Lower vehicle.

(13) Set front toe on vehicle to required specification. (Refer to 2 - SUSPENSION/WHEEL ALIGNMENT - STANDARD PROCEDURE).

LOWER BALL JOINT

DESCRIPTION

The ball joint used in the lower control arm of this vehicle is a sealed for life ball joint. The ball joint can not be replaced as a separate component of the lower control arm assembly. If the ball joint is determined to be defective it will require replacement of the complete lower control arm assembly.

The lower ball joint connection to the steering knuckle is achieved by an interference fit created by the tapered stud of the ball joint and a tapered hole in the steering knuckle. The ball joint stud is retained in the steering knuckle using a castle nut and a cotter pin. The cotter pin is used for positive retention of the castle nut.

The lower ball joint is lubricated for life at the time it is assembled in the lower control arm.

NOTE: The ball joint does not require any type of additional lubrication for the life of the vehicle. No attempt should be made to ever add any lubrication to the lower ball joint.

DIAGNOSIS AND TESTING - LOWER BALL JOINT

(1) Raise the vehicle on jack stands or centered on a frame contact type hoist. (Refer to LUBRICATION & MAINTENANCE/HOISTING - SERVICE PROCEDURE).

(2) Install a dial indicator on the vehicle so it is contacting the top surface of the steering knuckle near the lower ball joint stud castle nut.

(3) Grab wheel and tire assembly and push it up and down firmly.

(4) Record the amount of up and down movement of the steering knuckle recorded on the dial indicator.

(5) Replace lower control arm if the movement in the lower control arm exceeds 1.5 mm (.059 in.).

LOWER BALL JOINT SEAL BOOT

REMOVAL

CAUTION: The replacement of the lower ball joint seal boot can only be done in the event that the seal boot is damaged while performing a service procedure on the vehicle.

CAUTION: Under no circumstances can a lower ball joint seal boot be replaced if it is determined that the vehicle had been driven with the seal boot damaged. If the vehicle has been driven with a damaged seal boot contamination of the ball joint has occurred. When contamination of the ball joint has occurred the lower control arm must be replaced. This is to ensure excessive wear of the ball joint does not occur from the contamination present in the ball joint.

CAUTION: Excessive wear in the ball joint can lead to a separation of the ball joint from the lower control arm.

CAUTION: The procedure below must be carefully followed when replacing the ball joint seal in the event it is damaged while servicing a vehicle.

CAUTION: The ball joint used in the lower control arm of this vehicle is a lubricated for life ball joint. This ball joint does not required any additional lubrication for the life of the vehicle. Do not alter the lower control arm or ball joint in an attempt to lubricate the lower control arm ball joint. If it is determined that the ball joint is lacking proper lubrication, the lower control arm will need to be replaced.

(1) Remove lower control arm assembly from vehicle. (Refer to 2 - SUSPENSION/FRONT/LOWER CONTROL ARM - REMOVAL).

(2) Wrap a shop towel around the ball joint and seal boot. This is to prevent dirt and cleaning solvent to enter ball joint when cleaning area around ball joint.

(3) Using **ONLY** a solvent such as Mopar Foamy Engine Degreaser or an equivalent, thoroughly clean lower control arm in area around ball joint and seal. Then using a shop towel saturated with the engine degreaser, carefully wipe off the ball joint seal boot.

LOWER BALL JOINT SEAL BOOT (Continued)

(4) Using 2 screwdrivers (Fig. 13) remove the ball joint seal retaining ring from the bottom of the ball joint seal.

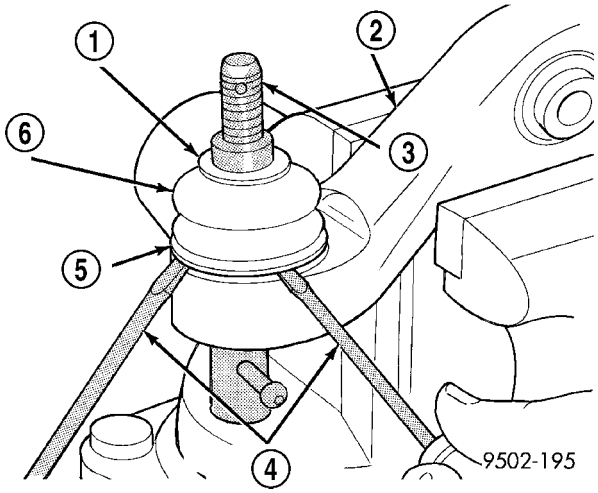

Fig. 13 Removing Ball Joint Seal Retaining Ring

1 - UPPER SEALING RING
2 - LOWER CONTROL ARM
3 - BALL JOINT
4 - SCREWDRIVERS
5 - BALL JOINT SEAL RETAINING RING
6 - BALL JOINT SEAL

(5) Remove ball joint seal from ball joint.

INSTALLATION

CAUTION: The replacement of the lower ball joint seal boot can only be done in the event that the seal boot is damaged while performing a service procedure on the vehicle.

CAUTION: Under no circumstances can a lower ball joint seal boot be replaced if it is determined that the vehicle had been driven with the seal boot damaged. If the vehicle has been driven with a damaged seal boot contamination of the ball joint has occurred. When contamination of the ball joint has occurred the lower control arm must be replaced. This is to ensure excessive wear of the ball joint does not occur from the contamination present in the ball joint.

CAUTION: Excessive wear in the ball joint can lead to a separation of the ball joint from the lower control arm.

CAUTION: The procedure below must be carefully followed when replacing the ball joint seal in the event it is damaged while servicing a vehicle.

CAUTION: The ball joint used in the lower control arm of this vehicle is a lubricated for life ball joint. This ball joint does not required any additional lubrication for the life of the vehicle. Do not alter the lower control arm or ball joint in an attempt to lubricate the lower control arm ball joint. If it is determined that the ball joint is lacking proper lubrication, the lower control arm will need to be replaced.

CAUTION: When replacing ball joint seal, do not use any other type of grease to lubricate ball joint other than the lubricant provided in the Mopar Ball Joint Seal service kit.

(1) Apply grease from the ball joint seal kit, to the specified areas of the ball joint stud and seal (Fig. 14). Be sure no grease is present on the seal boot installation section of the seal boot or lower control arm (Fig. 14).

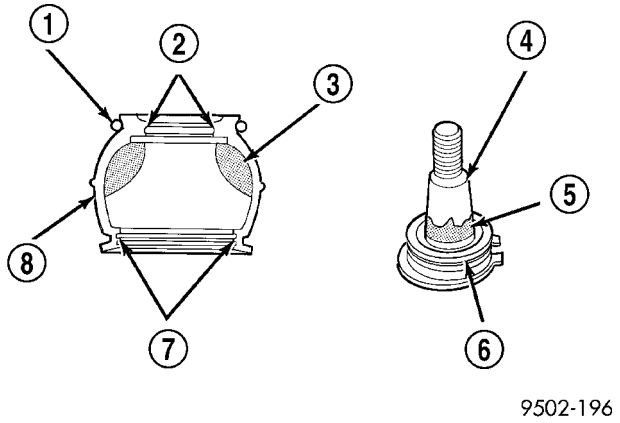

Fig. 14 Grease Correctly Applied To Ball Joint Stud And Seal Boot

1 - UPPER SEALING RING
2 - LIP
3 - GREASE
4 - BALL JOINT STUD TAPERED SECTION
5 - GREASE
6 - BOOT INSTALLATION SECTION
Wipe off the grease.
7 - BOOT INSTALLATION SECTION
Wipe off the grease.
8 - BALL JOINT SEAL BOOT

(2) Slide ball joint seal boot with upper seal ring installed, (Fig. 14) down tapered section of ball joint stud (Fig. 14). Seal boot is to be installed on stud of ball joint until seal boot is sitting on seal groove in lower control arm.

LOWER BALL JOINT SEAL BOOT (Continued)

(3) Carefully position ball joint seal boot in seal retaining groove on lower control arm. After installing seal boot in retaining groove, carefully bleed air out of sealing boot without getting grease pushed into seal boot retaining groove in lower control arm.

(4) Place Retaining Ring Installer, Special Tool, 6875-1 over ball joint seal boot (Fig. 15). Using adjusting knob, adjust tool so bottom edge of tool is even with top of retaining ring groove in seal boot (Fig. 15).

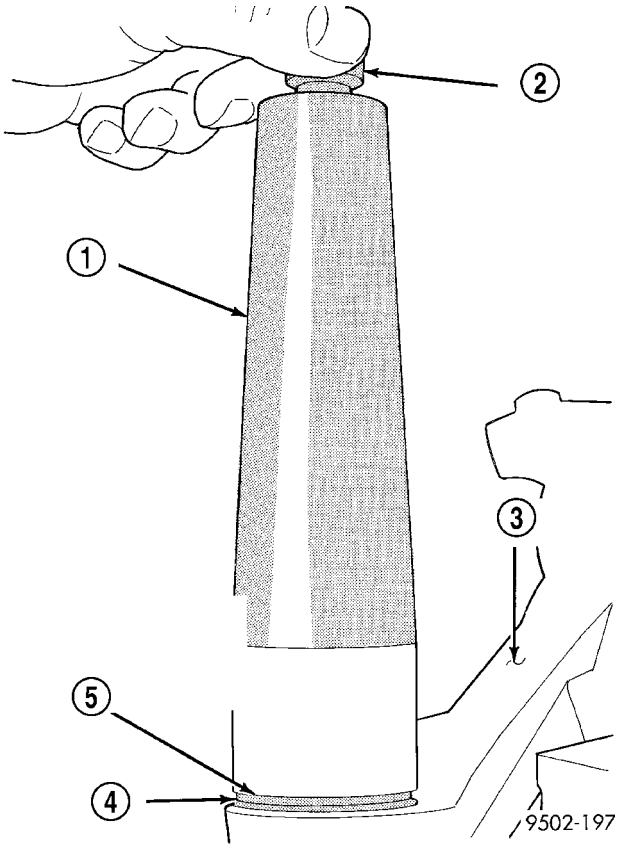

Fig. 15 Correctly Installed Ball Joint Seal Retaining Ring Tool

1 - SPECIAL TOOL 6875-1
2 - ADJUSTING KNOB
3 - LOWER CONTROL ARM
4 - SEAL BOOT RETAINING RING GROOVE
5 - BOTTOM EDGE OF TOOL MUST BE EVEN WITH TOP OF RETAINING RING GROOVE IN SEAL BOOT AS SHOWN

(5) Place seal boot retaining ring on Installer, Special Tool, 6875- 1 (Fig. 16). Then place expandable collar from Installer, Special Tool, 6875 over tapered cone of the special tool (Fig. 16).

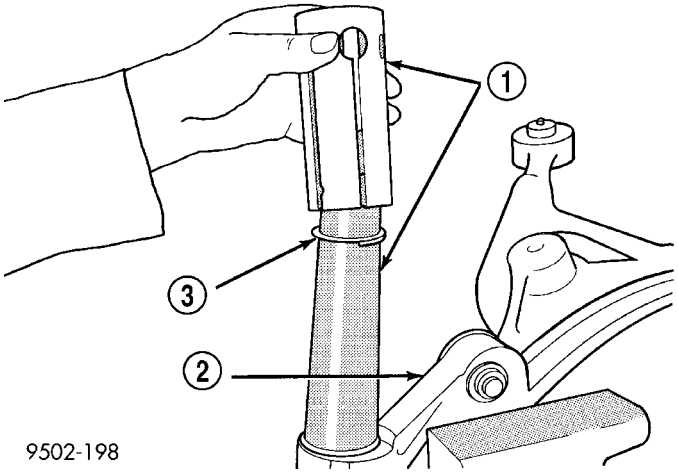

Fig. 16 Retaining Ring And Expandable Collar Installed On Tool

1 - SPECIAL TOOL 6875
2 - LOWER CONTROL ARM
3 - SEAL BOOT RETAINING RING

(6) Using the expandable collar of Installer, Special Tool, 6875 (Fig. 17) push the seal boot retaining ring down the cone of Installer, Special Tool, 6875.

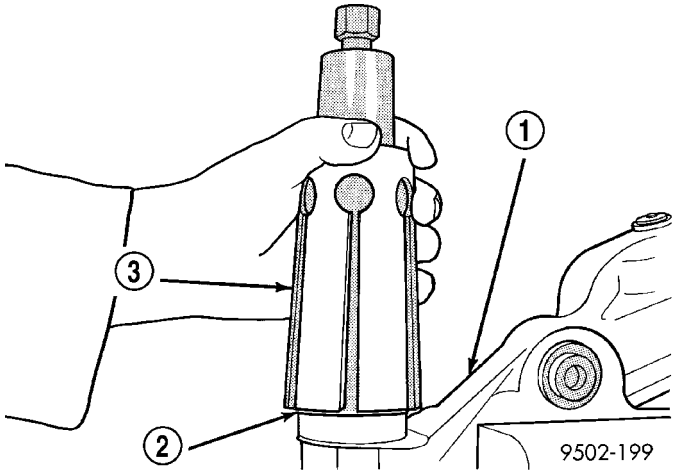

Fig. 17 Installing Seal Boot Retaining Ring

1 - LOWER CONTROL ARM
2 - RETAINING RING
3 - SPECIAL TOOL 6875

LOWER BALL JOINT SEAL BOOT (Continued)

(7) Continue pushing retaining ring down Installer, Special Tool, 6875, until it is installed in the retaining ring groove of the seal boot (Fig. 18)

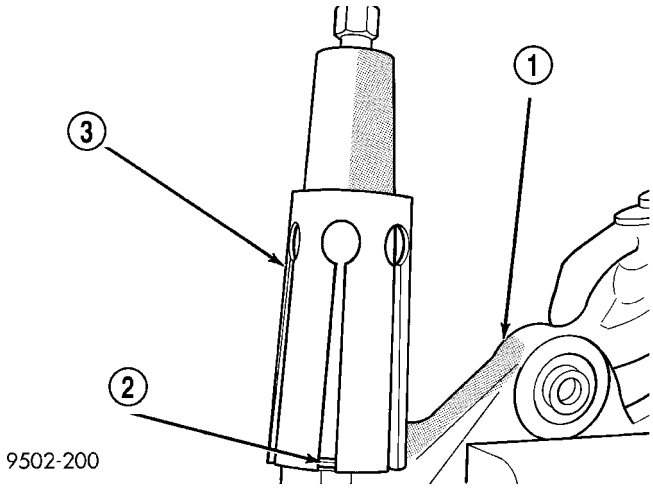

Fig. 18 Retaining Ring Installed In Ball Joint Seal Boot

1 - LOWER CONTROL ARM
2 - SEAL BOOT RETAINING RING
3 - SPECIAL TOOL 6875

(8) Remove Installer, Special Tool, 6875 from the ball joint seal boot. **When removing tool from seal boot be careful not to damage the seal boot with the tool.**

(9) Check retaining ring installation on seal boot to ensure it is fully seated in seal boot groove and the ends are not twisted (Fig. 19). Also, make sure upper sealing ring is on seal boot and correctly installed (Fig. 19). Check seal boot for damage before installing back on car.

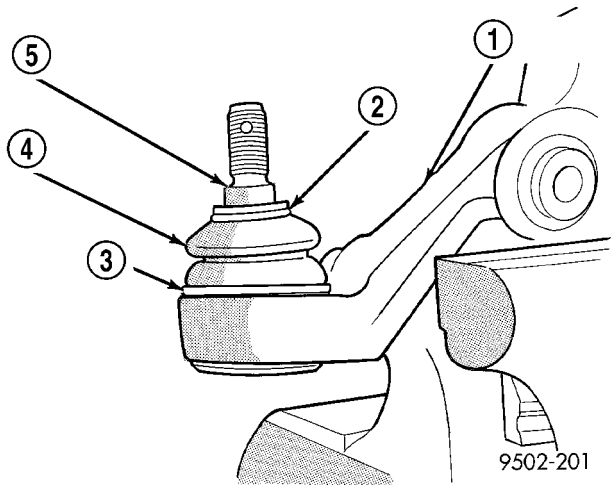

Fig. 19 Properly Installed Ball Joint Seal Boot

1 - LOWER CONTROL ARM
2 - UPPER SEALING RING
3 - SEAL BOOT RETAINING RING
4 - SEAL BOOT
5 - BALL JOINT STUD

(10) Install lower control arm assembly back on vehicle. (Refer to 2 - SUSPENSION/FRONT/LOWER CONTROL ARM - INSTALLATION).

LOWER CONTROL ARM

DESCRIPTION

The lower control arm is a ductile iron casting using 2 rubber bushings to isolate it from the front suspension crossmember and body of the vehicle. The isolator bushings consist of 2 metal encased rubber isolated pivot bushings. The front of the lower control arm is bolted to the front crossmember using a bolt through the center of the rubber pivot bushing. The rear of the lower control arm is mounted to the front suspension crossmember using a through-bolt. The lower control arms are inter-connected through a linked rubber isolated sway bar.

OPERATION

The lower control arm supports the lower end of the steering knuckle and allows for the up and down movement of the suspension during the jounce and rebound travel. It also provides a lower mounting point for the shock assembly.

DIAGNOSIS AND TESTING - LOWER CONTROL ARM

If damaged, the lower control arm casting is serviced only as a complete component. Inspect lower control arm for signs of damage from contact with the ground or road debris. If lower control arm shows any sign of damage, inspect lower control arm for distortion. **Do not attempt to repair or straighten a broken or bent lower control arm.**

The replaceable components of the lower control arm are: the ball joint grease seal and the control arm bushings. Inspect both control arm bushings for severe deterioration, and replace if required.

Inspect the lower ball joint for wear. Use the wear inspection procedure in the diagnosis and testing section in this group of service manual to determine if the wear is excessive and ball joint (lower control arm) replacement is required.

Service procedures to replace these components are detailed in the specific component removal and installation sections in this group of the service manual.

REMOVAL

(1) Raise vehicle. (Refer to LUBRICATION & MAINTENANCE/HOISTING - SERVICE PROCEDURE).

(2) Remove tire and wheel assembly.

LOWER CONTROL ARM (Continued)

NOTE: Removing the outer tie rod from the steering knuckle allows the steering knuckle to be turned further. This allows better access to the steering knuckle when striking it to remove the ball joint stud from the steering knuckle.

(3) Remove nut attaching the outer tie rod to steering knuckle (Fig. 20). **Remove nut from tie rod end by holding tie rod stud with a socket while loosening and removing nut with wrench (Fig. 20).**

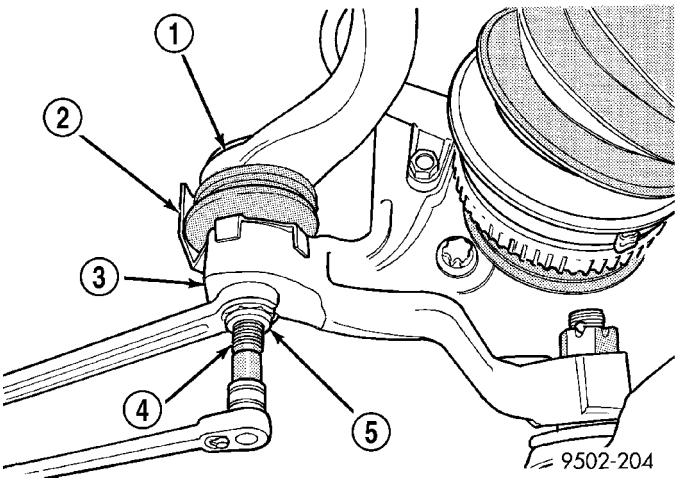

Fig. 20 Tie Rod End Attaching Nut

1 - TIE ROD
2 - HEAT SHIELD
3 - STEERING KNUCKLE
4 - TIE ROD STUD
5 - NUT

(4) Remove outer tie rod from steering knuckle using Remover, Special Tool C-3894-A.

(5) Remove cotter pin and castle nut from lower ball joint stud (Fig. 21).

CAUTION: No tool is to be inserted between the steering knuckle and the lower ball joint to separate the lower ball joint from the steering knuckle. The steering knuckle is to be separated from the ball joint only using the procedure as described in step Step 6 below.

CAUTION: When striking the steering knuckle, do not hit the heat shield covering the ball joint grease seal. Bending the heat shield against the ball joint grease seal will cause the grease seal to fail.

(6) Turn steering knuckle so front of steering knuckle is facing as far outboard in the wheel opening as possible. Using a hammer (Fig. 22), strike steering knuckle boss until steering knuckle separates from lower ball joint. **When striking steering knuckle, care MUST be taken not to hit lower control arm or ball joint grease seal.**

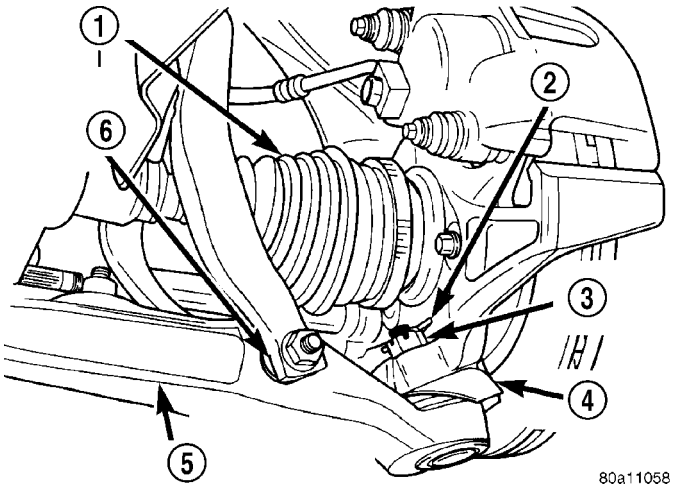

Fig. 21 Lower Ball Joint Attachment To Steering Knuckle

1 - DRIVESHAFT
2 - COTTER PIN
3 - CASTLE NUT
4 - HEAT SHIELD
5 - LOWER CONTROL ARM
6 - SHOCK ABSORBER CLEVIS

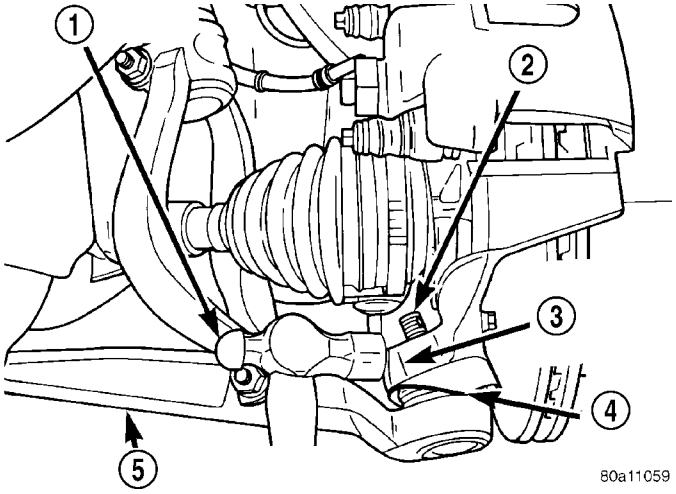

Fig. 22 Separating Lower Ball Joint Stud From Steering Knuckle

1 - HAMMER
2 - BALL JOINT STUD
3 - STEERING KNUCKLE BOSS
4 - HEAT SHIELD
5 - LOWER CONTROL ARM

CAUTION: Pulling the steering knuckle outward from the vehicle after releasing it from the ball joint, can separate driveshaft inner C/V joint, thus damaging it. (Refer to 2 - DRIVELINE AND DRIVESHAFT/ HALFSHAFT - REMOVAL).

LOWER CONTROL ARM (Continued)

(7) Remove shock absorber clevis to lower control arm bushing, nut and thru-bolt. Separate clevis from lower control arm (Fig. 23).

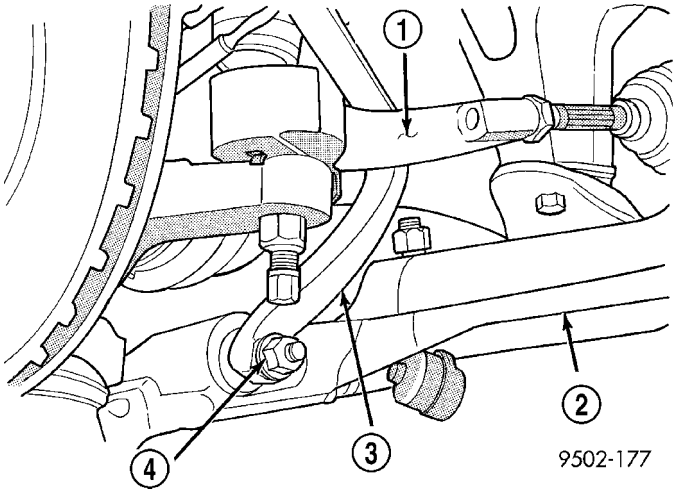

Fig. 23 Clevis To Lower Control Arm Attachment

1 - TIE ROD
2 - LOWER CONTROL ARM
3 - SHOCK ABSORBER CLEVIS
4 - THRU-BOLT

(8) Remove nut attaching stabilizer bar link to lower control arm (Fig. 24). When removing nut, hold stud of stabilizer bar link from turning by inserting an allen wrench in end of stud (Fig. 24).

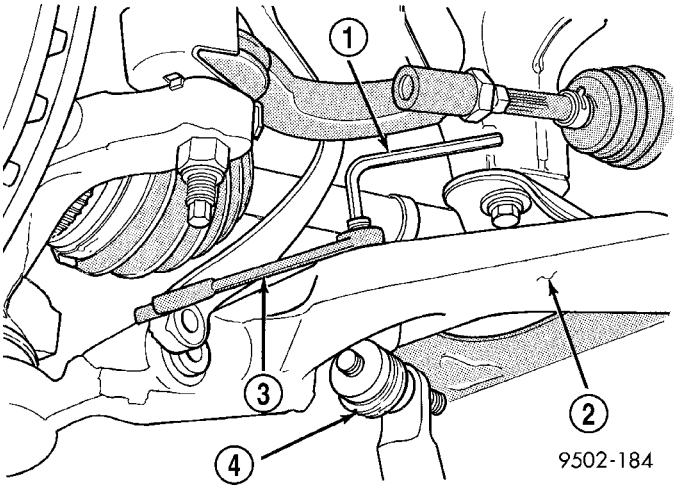

Fig. 24 Removing/Installing Nut From Stud Of Stabilizer Link

1 - ALLEN WRENCH
2 - LOWER CONTROL ARM
3 - WRENCH
4 - STABILIZER BAR LINK ASSEMBLY

(9) Remove bolts attaching closest stabilizer bar bushing clamp to front suspension crossmember and body of vehicle (Fig. 25).

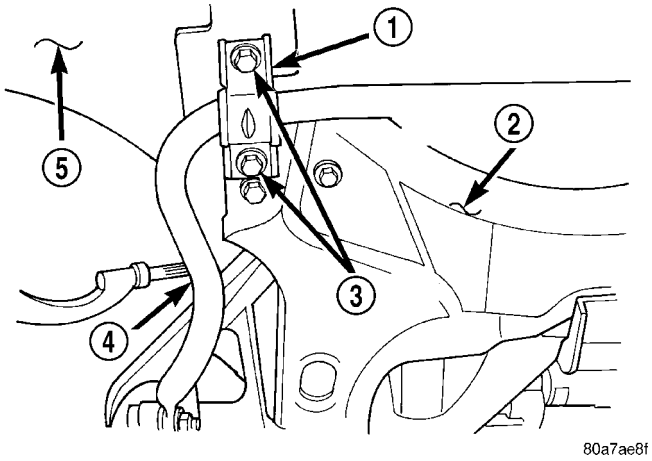

Fig. 25 Stabilizer Bar Bushing Clamp Attachment To Vehicle

1 - STABILIZER BAR BUSHING CLAMP
2 - FRONT SUSPENSION CROSSMEMBER
3 - ATTACHING BOLTS
4 - STABILIZER BAR
5 - VEHICLE BODY

(10) Lower that side of stabilizer bar away from lower control arm and body of vehicle.

(11) Remove nut and bolt attaching rear of lower control arm to front suspension crossmember (Fig. 26).

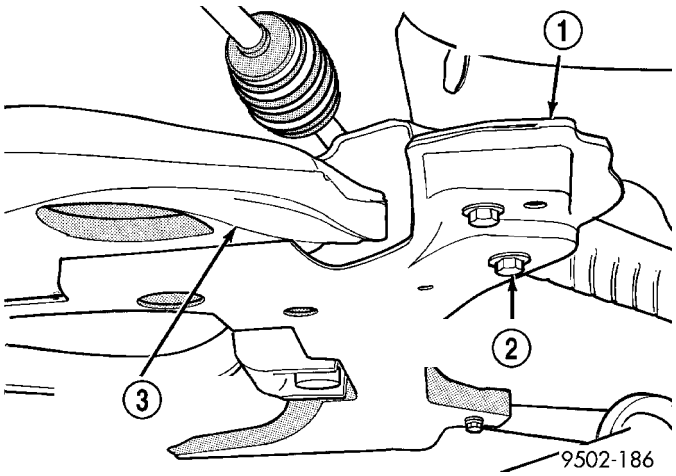

Fig. 26 Lower Control Arm Attachment To Front Suspension Crossmember

1 - FRONT SUSPENSION CROSSMEMBER
2 - LOWER CONTROL ARM ATTACHING BOLT AND NUT
3 - LOWER CONTROL ARM

LOWER CONTROL ARM (Continued)

(12) Remove nut and bolt attaching the front of lower control arm to front suspension crossmember (Fig. 27).

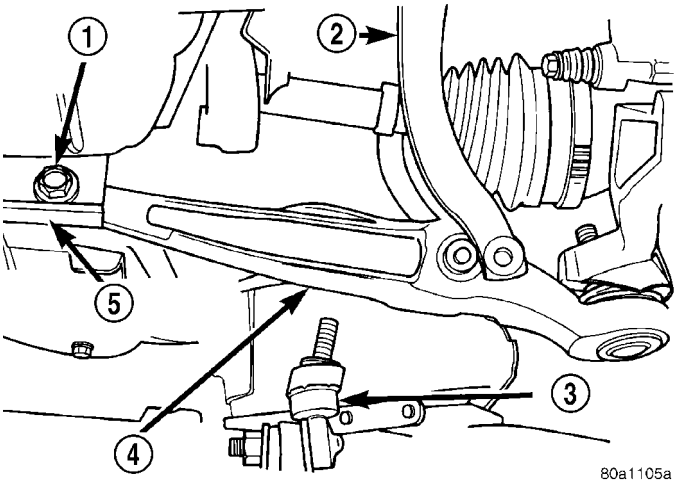

Fig. 27 Attaching Front Of Lower Control Arm To Suspension Crossmember

1 - ATTACHING BOLT AND NUT
2 - SHOCK CLEVIS
3 - STABILIZER BAR
4 - LOWER CONTROL ARM
5 - FRONT SUSPENSION CROSSMEMBER

CAUTION: When removing lower control arm from crossmember care must be taken to prevent hitting lower ball joint seal against steering knuckle, causing damage to the ball joint seal.

(13) Remove front of lower control arm from suspension crossmember first, then remove rear of lower control arm from suspension crossmember. When removing rear of lower control arm from crossmember, keep control arm as level as possible. This will keep rear bushing from binding on crossmember making it easier to remove control arm from crossmember.

DISASSEMBLY

DISASSEMBLY - FRONT ISOLATOR BUSHING

To perform removal and replacement of the lower control arm isolator bushings, the lower control arm must be removed from the vehicle.

(1) Remove lower control arm assembly from vehicle. (Refer to 2 - SUSPENSION/FRONT/LOWER CONTROL ARM - REMOVAL).

(2) Install Bushing Remover, Special Tool 6602-5 and Bushing Receiver, Special Tool MB-990799 on Special Tool C-4212-F.

(3) Install lower control arm on Special Tools assembled for removal of the front isolator bushing. Be sure Special Tool MB-990799 is square on lower control arm and Special Tool 6602-5 is positioned correctly on isolator bushing (Fig. 28).

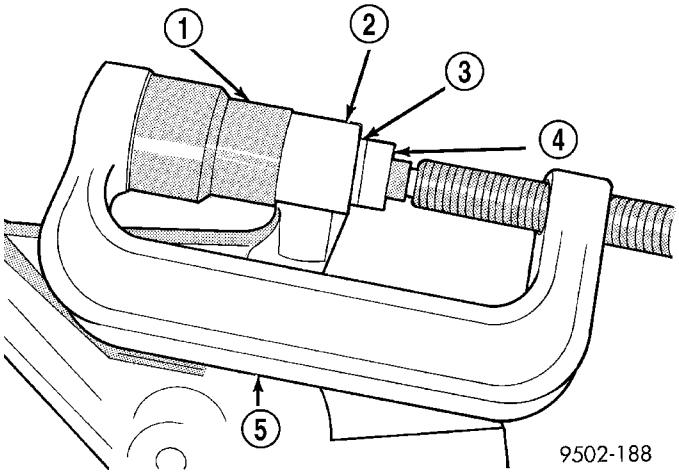

Fig. 28 Removing Front Bushing From Lower Control Arm

1 - SPECIAL TOOL MB-990799
2 - LOWER CONTROL ARM
3 - FRONT ISOLATOR BUSHING
4 - SPECIAL TOOL 6602-5
5 - SPECIAL TOOL C-4212-F

(4) Tighten screw on Remover/Installer Special Tool C-4212-F to press front bushing out of lower control arm.

DISASSEMBLY - REAR ISOLATOR BUSHING

To perform removal and replacement of the lower control arm isolator bushings, the lower control arm must be removed from the vehicle.

(1) Remove lower control arm assembly from vehicle. (Refer to 2 - SUSPENSION/FRONT/LOWER CONTROL ARM - REMOVAL).

(2) Install Bushing Remover, Special Tool 6756 and Bushing Receiver, Special Tool C-4366-2 on Special Tool C-4212-F (Fig. 29).

(3) Install Special Tools assembled for removal of the rear isolator bushing on the lower control arm. Be sure Special Tool C-4366-2 is square on lower control arm and Special Tool 6756 is positioned correctly on isolator bushing (Fig. 29).

(4) Tighten screw on Remover/Installer Special Tool C-4212-F to press rear bushing out of lower control arm.

DISASSEMBLY - CLEVIS BUSHING

To perform removal and replacement of the lower control arm clevis bushing, the lower control arm must be removed from the vehicle.

(1) Remove lower control arm assembly from vehicle. (Refer to 2 - SUSPENSION/FRONT/LOWER CONTROL ARM - REMOVAL).

LOWER CONTROL ARM (Continued)

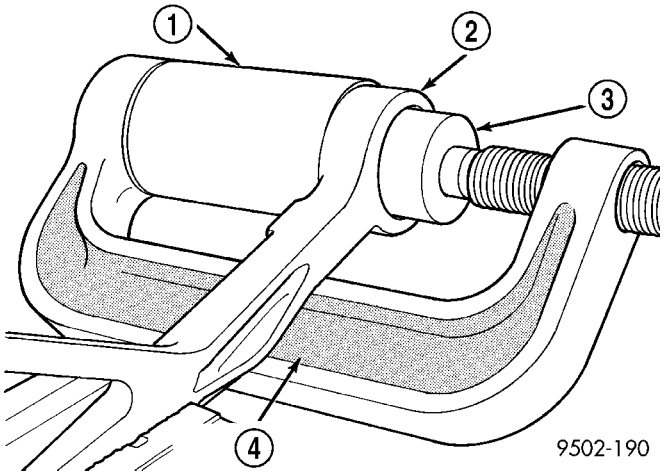

Fig. 29 Removing Lower Control Arm Rear Bushing

1 - SPECIAL TOOL C-4366-2
2 - LOWER CONTROL ARM
3 - SPECIAL TOOL 6756
4 - SPECIAL TOOL C-4212-F

(2) Install Bushing Remover, Special Tool 6877 and Bushing Receiver, Special Tool 6876 on Special Tool C-4212-F.

(3) Install lower control arm on Special Tools assembled for removal of the clevis isolator bushing. Be sure Special Tool 6876 is square on lower control arm and Special Tool 6877 is positioned correctly on clevis bushing (Fig. 30).

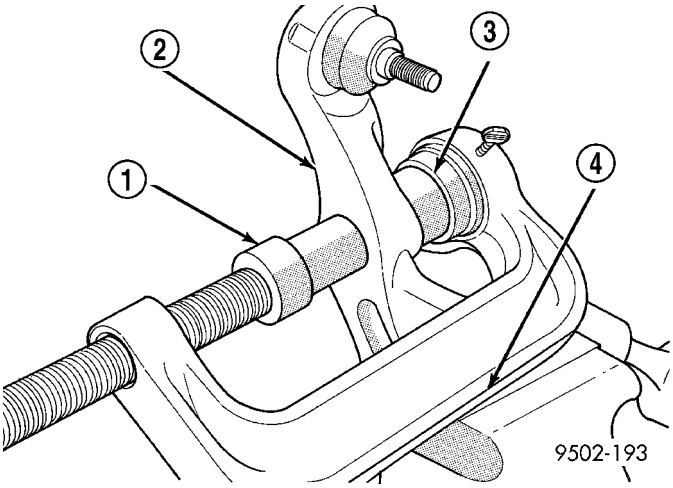

Fig. 30 Removing Clevis Bushing From Lower Control Arm

1 - SPECIAL TOOL 6877
2 - LOWER CONTROL ARM
3 - SPECIAL TOOL 6876
4 - SPECIAL TOOL C-4212-F

(4) Tighten screw on Remover/Installer Special Tool C-4212-F to press clevis bushing out of lower control arm.

ASSEMBLY

ASSEMBLY - FRONT ISOLATOR BUSHING

To perform removal and replacement of the lower control arm isolator bushings, the lower control arm must be removed from the vehicle.

(1) Mount Bushing Installer, Special Tool 6876 on screw portion of Remover/Installer Special Tool C-4212-F (Fig. 31).

(2) Start front bushing into lower control arm **by hand, making sure it is square with its mounting hole in the lower control arm.** Bushing is to be installed in lower control arm from the machined surface side of lower control arm bushing hole.

(3) Install lower control arm on Special Tools assembled for installation of front isolator bushing into lower control arm (Fig. 31). Be sure Special Tool 6758 is square on lower control arm and Special Tool 6876 is positioned correctly on isolator bushing.

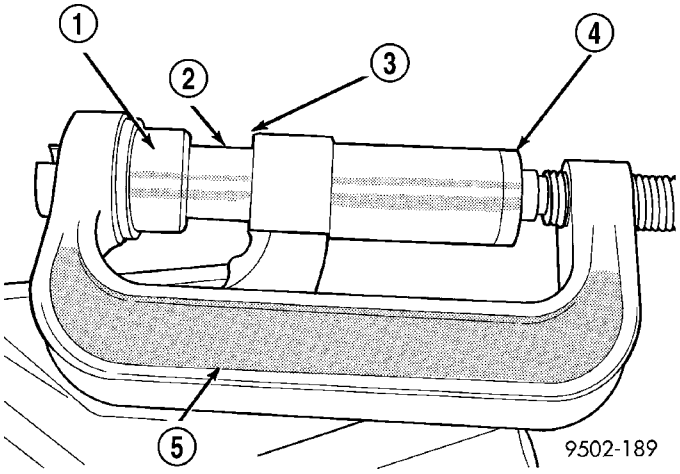

Fig. 31 Installing

1 - SPECIAL TOOL 6876
2 - ISOLATOR BUSHING
3 - MACHINED SURFACE SIDE OF LOWER CONTROL ARM
4 - SPECIAL TOOL 6758
5 - SPECIAL TOOL C-4212-F

(4) Tighten screw on Remover/Installer Special Tool C-4212-F pressing front bushing into lower control arm. Continue pressing front bushing into lower control arm until bushing is sitting flush on the machined surface of the lower control arm. This will correctly position front bushing in lower control arm.

(5) Install lower control arm assembly back on vehicle. (Refer to 2 - SUSPENSION/FRONT/LOWER CONTROL ARM - INSTALLATION).

ASSEMBLY - REAR ISOLATOR BUSHING

To perform removal and replacement of the lower control arm isolator bushings, the lower control arm must be removed from the vehicle.

LOWER CONTROL ARM (Continued)

(1) Start rear bushing into lower control arm **by hand, making sure it is square with its mounting hole in the lower control arm.** Bushing is to be installed from the machined surface side of lower control arm bushing hole, with the void in rubber portion of bushing facing away from ball joint (Fig. 32).

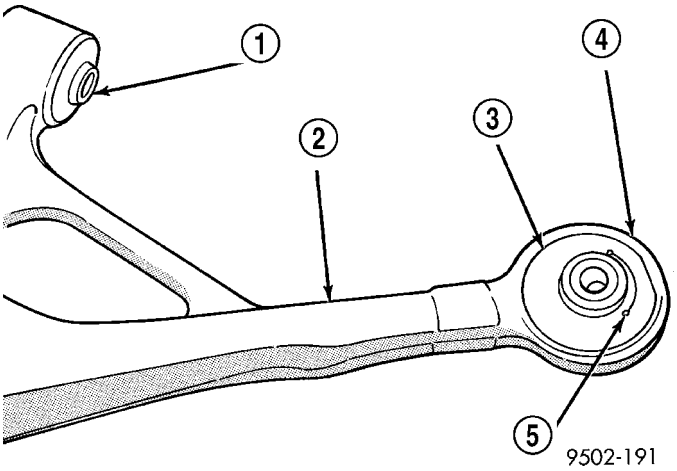

Fig. 32 Correctly Positioned Rear Isolator Bushing In Control Arm

1 - FRONT ISOLATOR BUSHING
2 - LOWER CONTROL ARM
3 - REAR ISOLATOR BUSHING
4 - MACHINED SURFACE
5 - VOID IN BUSHING IN THIS DIRECTION

(2) Mount Bushing Installer, Special Tool 6760 on screw portion of Remover/Installer Special Tool C-4212-F (Fig. 33).

(3) Install Special Tools assembled for installation of rear isolator bushing into lower control arm on the lower control arm. Be sure Special Tool 6756 is square on lower control arm and Special Tool 6760 is positioned correctly on isolator bushing (Fig. 33).

(4) Tighten screw on Remover/Installer Special Tool C-4212-F pressing rear bushing into lower control arm. Continue pressing rear bushing into lower control arm until bushing is sitting flush on the machined surface (Fig. 33) of the lower control arm. This will correctly position rear bushing in lower control arm.

(5) Install lower control arm assembly back on vehicle. (Refer to 2 - SUSPENSION/FRONT/LOWER CONTROL ARM - INSTALLATION).

ASSEMBLY - CLEVIS BUSHING

To perform removal and replacement of the lower control arm clevis bushing, the lower control arm must be removed from the vehicle.

(1) Start clevis bushing into lower control arm **by hand, making sure it is square with its mounting hole in the lower control arm.** Bushing is to

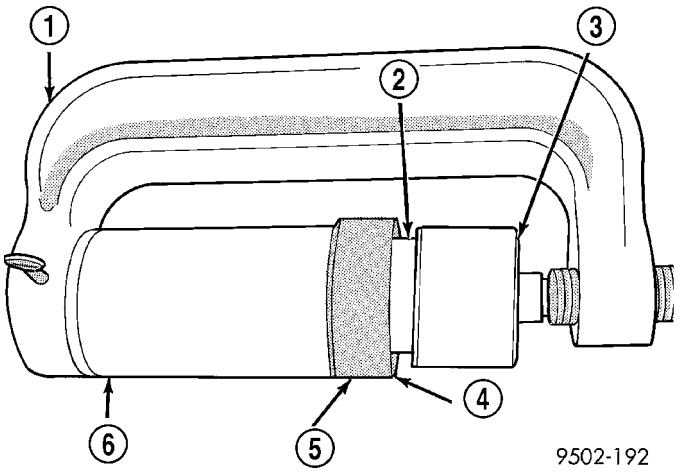

Fig. 33 Installing Rear Bushing In Lower Control Arm

1 - SPECIAL TOOL C-4212-F
2 - REAR BUSHING
3 - SPECIAL TOOL 6760
4 - MACHINED SURFACE ON LOWER CONTROL ARM
5 - LOWER CONTROL ARM
6 - SPECIAL TOOL 6756

be installed in lower control arm from the machined surface side of lower control arm bushing hole.

(2) Mount Bushing Installer, Special Tool 6877 on screw portion of Remover/Installer Special Tool C-4212-F as shown in (Fig. 34).

(3) Install the assembled special tools for installing the clevis bushing into the lower control arm, on the lower control arm and clevis bushing (Fig. 34). Be sure Special Tool 6876 is square on lower control arm and Special Tool 6877 is positioned correctly on clevis bushing (Fig. 34).

(4) Tighten screw on Remover/Installer Special Tool C-4212-F pressing clevis bushing into lower control arm. Continue pressing clevis bushing into lower control arm until bushing is sitting flush with the machined surface of the lower control arm. This will correctly position the clevis bushing in the lower control arm.

(5) Install lower control arm assembly back on vehicle. (Refer to 2 - SUSPENSION/FRONT/LOWER CONTROL ARM - INSTALLATION).

INSTALLATION

(1) Position rear of lower control arm into front suspension crossmember first, then install front of lower control arm in front suspension crossmember. Install bolts and nuts attaching front and rear of lower control arm to front suspension crossmember (Fig. 27) (Fig. 26). **Do not tighten front attaching bolt at this time.** Tighten lower control arm rear attaching nut and bolt (Fig. 26) to 95 N·m (70 ft. lbs.) torque.

LOWER CONTROL ARM (Continued)

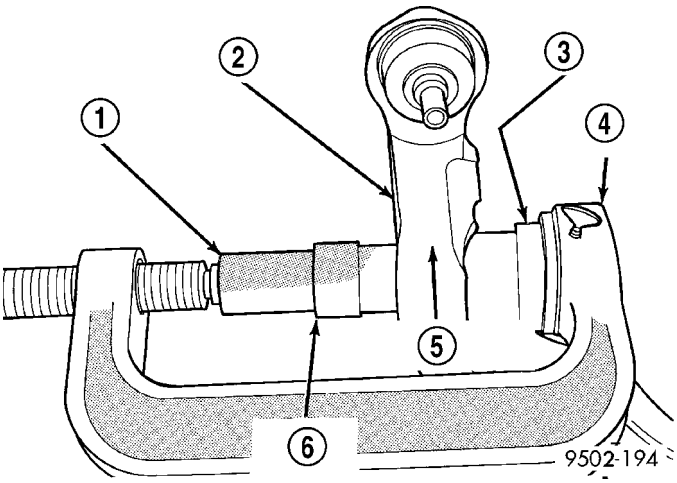

Fig. 34 Installing Clevis Bushing In Lower Control Arm

1 - SPECIAL TOOL 6877
2 - MACHINED SURFACE SIDE OF LOWER CONTROL ARM
3 - SPECIAL TOOL 6876
4 - SPECIAL TOOL C-4212-F
5 - LOWER CONTROL ARM
6 - CLEVIS BUSHING

(2) Install lower control arm ball joint stud into steering knuckle. Install the steering knuckle to ball joint stud castle nut (Fig. 21). **Do not tighten nut at this time.**

CAUTION: When installing tie rod on steering knuckle, the heat shield (Fig. 35) must be installed. If heat shield is not installed, tie rod seal boot can fail due to excessive heat from brake rotor.

(3) Install outer tie rod stud into steering knuckle. Start outer tie rod-to-steering knuckle attaching nut onto tie rod stud. While holding stud of tie rod end stationary, tighten nut using a crowfoot and 11/32 socket. Tighten nut to 61 N·m (45 ft. lbs.) torque (Fig. 35).

(4) Tighten lower control arm ball joint castle nut to 74 N·m (55 ft. lbs.) torque. Install cotter pin (Fig. 21).

(5) Position stabilizer bar link into its lower control arm mounting hole.

(6) Align stabilizer bar bushing clamp with mounting holes in front suspension crossmember and body of vehicle. Install and tighten bushing clamp mounting bolts to 61 N·m (45 ft. lbs.) torque (Fig. 25).

(7) Install and tighten stabilizer bar link-to-lower control arm nut to 102 N·m (75 ft. lbs.) torque. When tightening nut, hold stud of link from turning using an allen wrench (Fig. 24).

(8) Align shock absorber clevis with bushing in lower control arm and install thru-bolt and nut (Fig. 23). **Do not tighten nut at this time.**

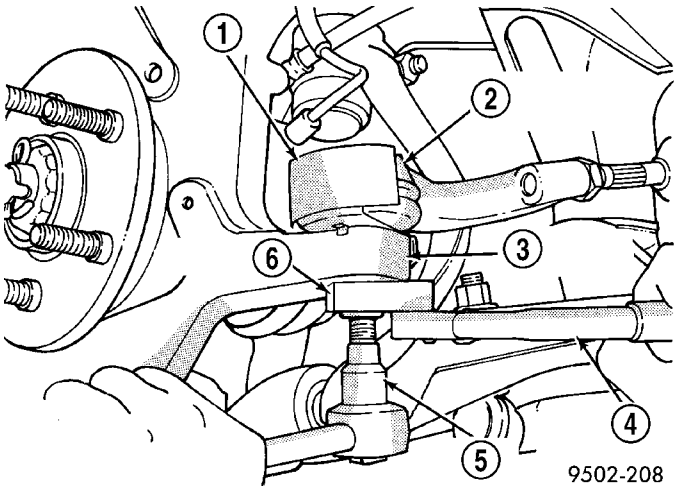

Fig. 35 Torquing Tie Rod End Attaching Nut

1 - HEAT SHIELD
2 - OUTER TIE ROD
3 - STEERING KNUCKLE
4 - TORQUE WRENCH
5 - 11/32 SOCKET
6 - CROWFOOT

CAUTION: When supporting lower control arm with jack stand, do not position jack stand under the ball joint cap on the lower control arm. Position stand in area of lower control arm shown (Fig. 36).

(9) Position a jack stand under lower control arm, so that when arm is lowered onto it, vehicle will be at curb height (Fig. 36).

(10) Lower vehicle with jack stand positioned under lower control arm (Fig. 36). Continue to lower vehicle until total weight of that corner of vehicle is supported by jack stand and lower control arm.

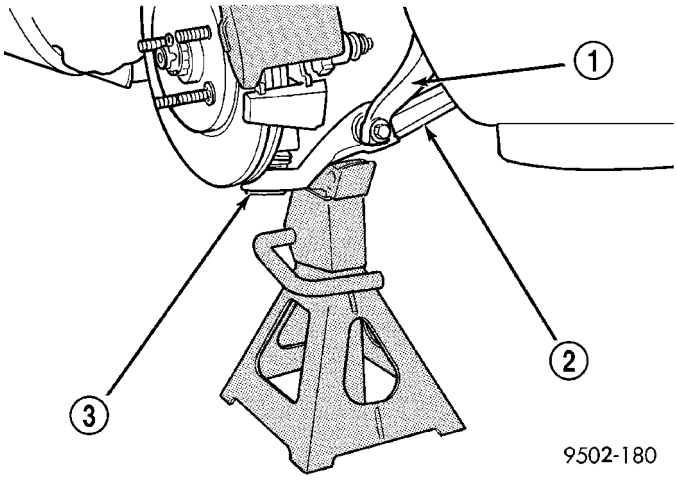

Fig. 36 Supporting Lower Control Arm With Jack Stand

1 - SHOCK ABSORBER CLEVIS
2 - LOWER CONTROL ARM
3 - BALL JOINT CAP

LOWER CONTROL ARM (Continued)

CAUTION: When tightening the thru-bolt and nut, do not turn the bolt in the clevis. The serrations on the bolt and the hole in the clevis will be damaged.

(11) With the vehicle's suspension at curb height, tighten the clevis-to-lower control arm bushing thru-bolt nut (Fig. 23) to 88 N·m (65 ft. lbs.) torque.

(12) Tighten front lower control arm nut and bolt (Fig. 27) to 182 N·m (135 ft. lbs.) torque.

(13) Raise vehicle and remove jack stand from under lower control arm.

(14) Install wheel and tire assembly. Install wheel mounting (lug) nuts and progressively tighten in proper sequence to 135 N·m (100 ft. lbs.) torque.

(15) Lower vehicle.

(16) Check wheel alignment specifications and set front toe to preferred specifications. (Refer to 2 - SUSPENSION/WHEEL ALIGNMENT - STANDARD PROCEDURE)

SHOCK ASSEMBLY

DESCRIPTION - SHOCK ASSEMBLY

The front shock assembly and suspension of the vehicle is supported by coil springs positioned around shock absorbers. The springs are contained between an upper seat located in the upper mounting bracket and a lower spring seat on the shock absorber.

The top of each shock absorber is bolted to a cast shock absorber/upper control arm bracket which is bolted to the shock tower of the vehicle using 4 mounting bolts.

The bottom of the shock absorber attaches to a clevis bracket using a pinch bolt. The clevis bracket attaches to the lower control arm of the vehicle using a through-bolt and prevailing torque nut.

If shock absorbers require replacement, be sure that they are replaced with shock absorbers meeting the correct specifications for the particular vehicle.

A coil spring is housed within each shock assembly. Coil springs are rated separately for each corner or side of the vehicle depending on optional equipment and type of vehicle service. If the coil springs require replacement, be sure that the springs needing replacement, are replaced with springs meeting the correct load rating and spring rate for the vehicle and its specific options.

The components of the shock assembly listed below are serviceable if found to be defective (Fig. 37):

- Upper mounting bracket
- Upper spring isolator
- Dust shield
- Cup
- Jounce bumper
- Coil spring
- Shock absorber
- Lower spring isolator

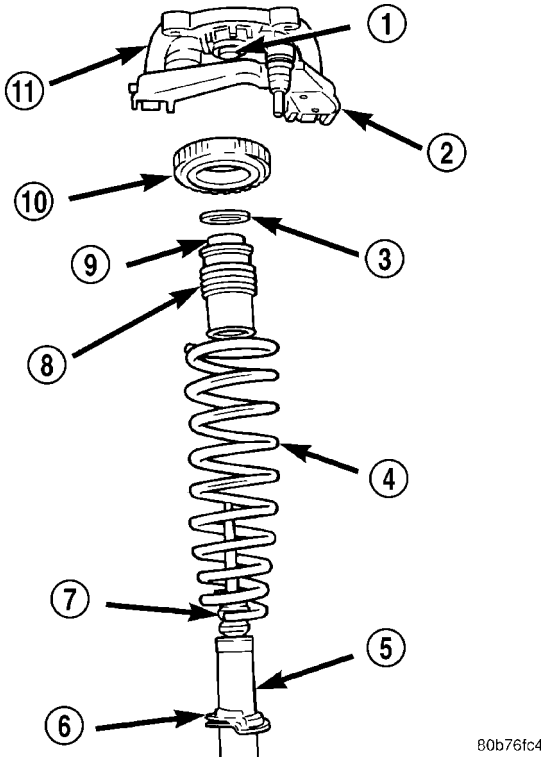

Fig. 37 Shock Assembly Components

1 - SHOCK ABSORBER ROD BUSHING
2 - UPPER CONTROL ARM
3 - RETAINER WASHER
4 - COIL SPRING
5 - SHOCK ABSORBER
6 - LOWER SPRING ISOLATOR
7 - JOUNCE BUMPER
8 - DUST SHIELD
9 - CUP
10 - UPPER SPRING ISOLATOR
11 - UPPER MOUNTING BRACKET

The shock absorber/upper control arm mounting bracket also provides a pivotal mounting point for the upper control arm.

SHOCK ASSEMBLY (Continued)

OPERATION - SHOCK ASSEMBLY

The shock absorber assembly cushions the ride of the vehicle, controlling vibration, and jounce and rebound of the suspension.

The coil spring controls ride quality and maintains proper ride height.

The spring isolators isolate the coil spring at the top and bottom from coming into metal-to-metal contact with the upper mounting bracket and shock absorber.

The jounce bumper limits suspension travel and metal-to-metal contact under full jounce condition.

The shock absorber dampens jounce and rebound motions of the coil spring and suspension.

DIAGNOSIS AND TESTING - SHOCK ASSEMBLY (FRONT)

(1) Inspect for damaged or broken coil springs (Fig. 38).

(2) Inspect for torn or damaged shock absorber dust boots (Fig. 38).

(3) Lift the dust boot and inspect the shock absorber for evidence of fluid running from the upper end of fluid reservoir. (Actual leakage will be a stream of fluid running down the side and dripping off the lower end of the shock absorber). A slight amount of seepage between the shock absorber rod and the seal is not unusual and does not affect performance of the shock absorber. Also inspect jounce bumpers for signs of damage or deterioration (Fig. 38).

REMOVAL - SHOCK ASSEMBLY

NOTE: Before proceeding, (Refer to 2 - SUSPENSION/FRONT - WARNING).

(1) Loosen wheel nuts.

(2) Raise vehicle. (Refer to LUBRICATION & MAINTENANCE/HOISTING - SERVICE PROCEDURE).

(3) Remove the wheel and tire assembly.

(4) If both shock assemblies are removed, mark the shock assemblies right and left according to which side of the vehicle they were removed from.

(5) Remove the wheel speed sensor cable routing bracket (Fig. 39) from the steering knuckle.

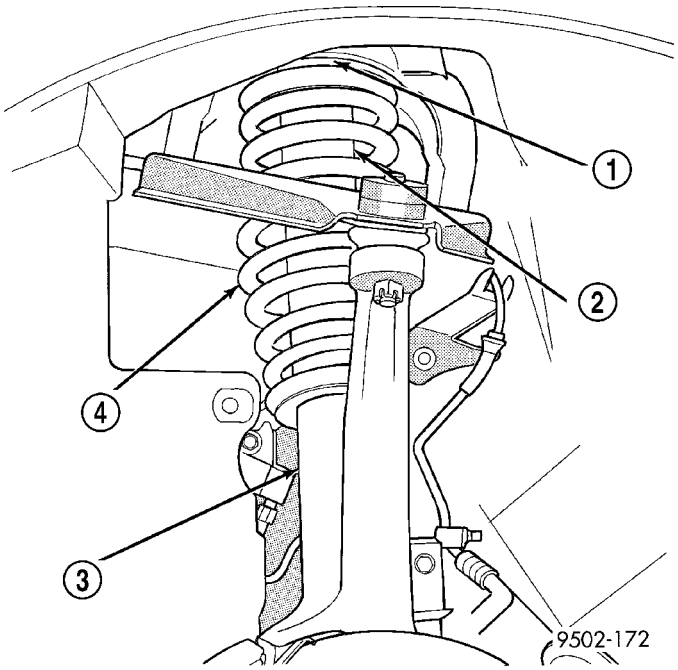

Fig. 38 On Vehicle Inspection

1 - UPPER SPRING SEAT
2 - DUST BOOT
3 - SHOCK ABSORBER
4 - COIL SPRING

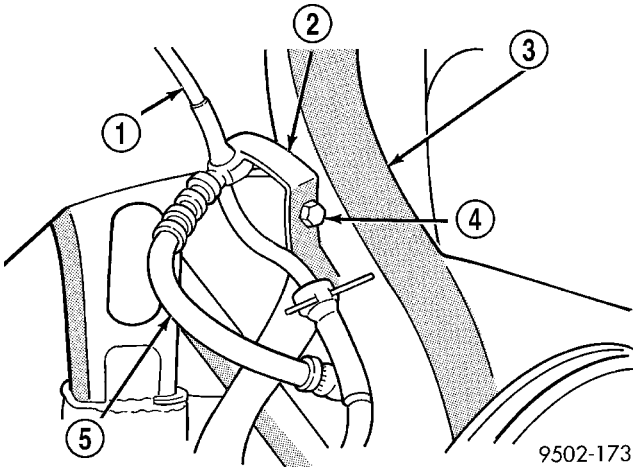

Fig. 39 Wheel Speed Sensor Cable Routing Bracket

1 - WHEEL SPEED SENSOR CABLE
2 - SPEED SENSOR CABLE ROUTING BRACKET
3 - STEERING KNUCKLE
4 - ATTACHING BOLT
5 - BRAKE CALIPER FLEX HOSE

SHOCK ASSEMBLY (Continued)

(6) Remove the nut from the upper ball joint stud.

(7) Remove the upper ball joint stud from the steering knuckle using Puller, Special Tool, C-3894-A (Fig. 40). Pull steering knuckle outward and position toward the rear of the front wheel opening.

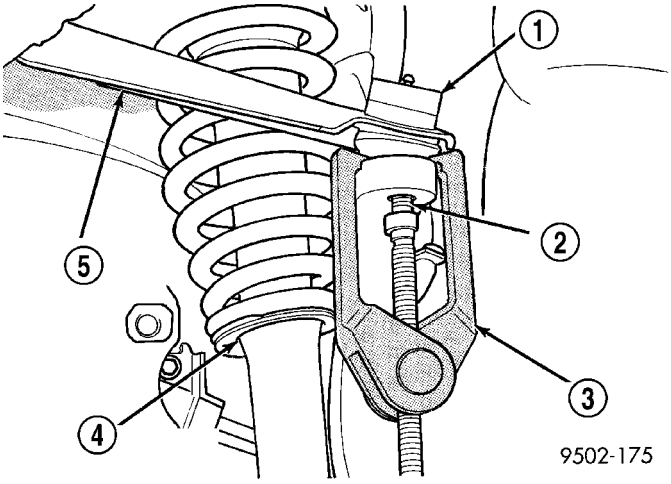

Fig. 40 Ball Joint Stud Removal From Steering Knuckle

1 - BALL JOINT
2 - BALL JOINT STUD
3 - SPECIAL TOOL C-3894-A
4 - SHOCK ABSORBER ASSEMBLY
5 - UPPER CONTROL ARM

(8) Remove pinch bolt attaching shock absorber clevis to shock absorber (Fig. 41).

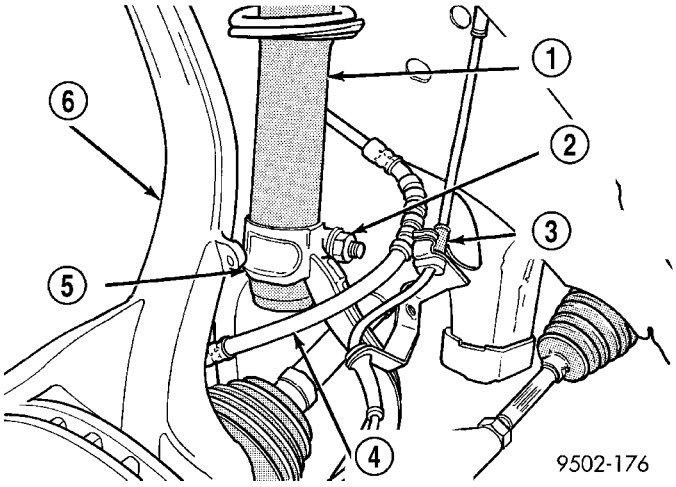

Fig. 41 Shock Absorber Clevis Bracket Pinch Bolt

1 - SHOCK ABSORBER ASSEMBLY
2 - PINCH BOLT AND NUT
3 - WHEEL SPEED SENSOR CABLE
4 - BRAKE FLEX HOSE
5 - CLEVIS BRACKET
6 - STEERING KNUCKLE

(9) Remove the nut and thru-bolt (Fig. 42) attaching the shock absorber clevis to the lower control arm.

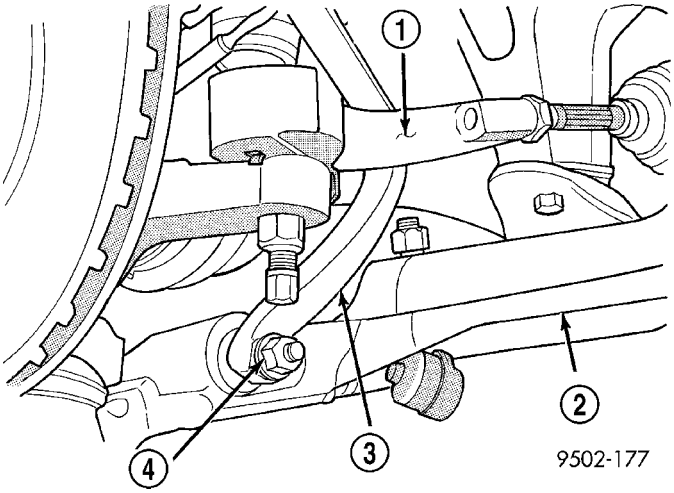

Fig. 42 Clevis To Lower Control Arm Attaching Bolt

1 - TIE ROD
2 - LOWER CONTROL ARM
3 - SHOCK ABSORBER CLEVIS
4 - THRU-BOLT

(10) Remove the clevis from the shock absorber by carefully tapping the clevis off the shock absorber using a soft (brass) drift.

(11) Remove the 4 bolts (Fig. 43) attaching the shock absorber/upper control arm mounting bracket to the shock tower of the vehicle.

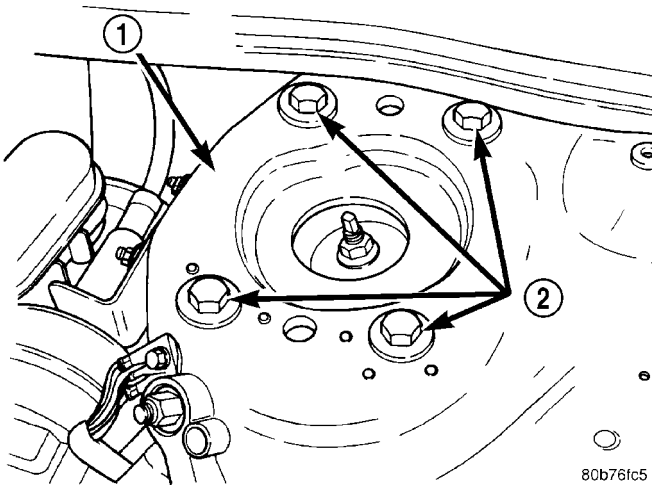

Fig. 43 Shock Assembly Attachment To Shock Tower

1 - SHOCK TOWER
2 - MOUNTING BOLTS

SHOCK ASSEMBLY (Continued)

(12) Remove the shock assembly from the vehicle. The shock assembly is removed out through the front area of the front wheel well.

(13) For disassembly of the shock assembly, (Refer to 2 - SUSPENSION/FRONT/SHOCK - DISASSEMBLY).

DISASSEMBLY - SHOCK ASSEMBLY

The shock assembly must be removed from the vehicle for it to be disassembled and assembled. (Refer to 2 - SUSPENSION/FRONT/SHOCK - REMOVAL)

For the disassembly and assembly of the shock assembly, use strut spring compressor Pentastar Service Equipment (PSE) tool W-7200, or equivalent, to compress the coil spring. Follow the manufacturer's instructions closely.

(1) If both shocks are being serviced at the same time, mark the coil spring and shock assembly according to which side of the vehicle the shock was removed from, and which shock the coil spring was removed from.

(2) Position the shock assembly in the strut coil spring compressor following the manufacturer's instructions. Set the lower hooks and install the clamp on the lower end of the coil spring, so the shock is held in place once the shock shaft nut is removed (Fig. 44). Rotate the shock assembly so the upper control arm ball joint sits directly below the front upper hook as shown (Fig. 45). Position the upper hooks on top of the upper mounting bracket (Fig. 45).

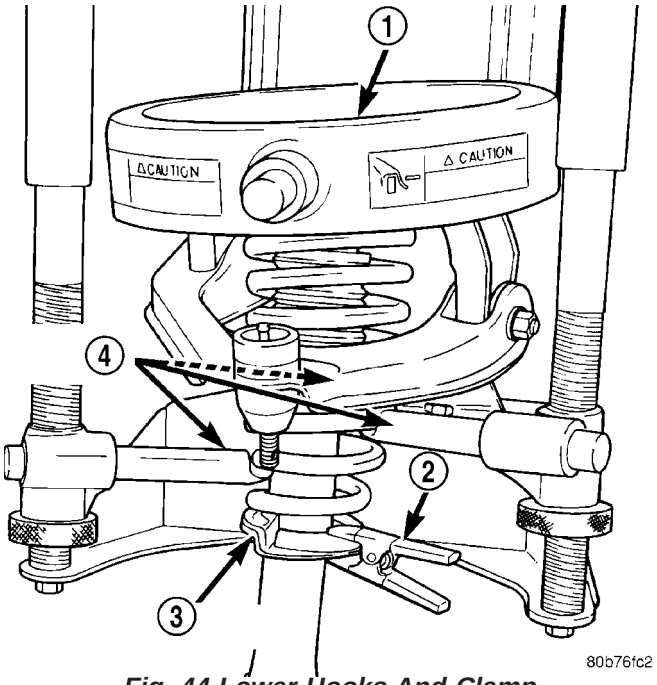

Fig. 44 Lower Hooks And Clamp

1 - COMPRESSOR
2 - CLAMP
3 - COIL SPRING
4 - LOWER HOOKS

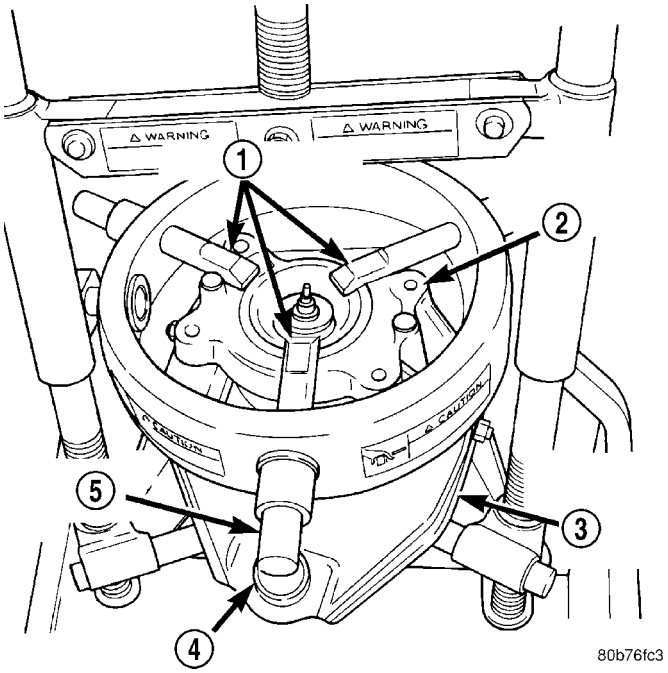

Fig. 45 Upper Hooks Positioned

1 - UPPER HOOKS
2 - UPPER MOUNTING BRACKET
3 - UPPER CONTROL ARM
4 - UPPER BALL JOINT
5 - FRONT HOOK

WARNING: DO NOT REMOVE THE SHOCK ROD NUT BEFORE THE COIL SPRING IS COMPRESSED. THE COIL SPRING IS HELD UNDER PRESSURE AND MUST BE COMPRESSED, REMOVING SPRING TENSION FROM THE UPPER MOUNTING BRACKET BEFORE THE ROD NUT IS REMOVED.

(3) Compress the coil spring until all coil spring tension is removed from the upper mounting bracket.

(4) Hold the shock rod from rotating using special socket Snap-On A136®, or an equivalent, and remove the retainer nut (Fig. 46).

(5) Remove the upper bushing retainer washer (Fig. 47) from the shock absorber rod.

(6) Remove the clamp from the bottom of the coil spring and remove the shock absorber, lower spring isolator, jounce bumper, cup, dust boot, and lower bushing retainer washer out through the bottom of the coil spring.

NOTE: If the coil spring, upper mounting bracket, rod bushings, upper coil spring isolator, or upper control arm need to be serviced, proceed with the next step, otherwise, proceed with step 11.

SHOCK ASSEMBLY (Continued)

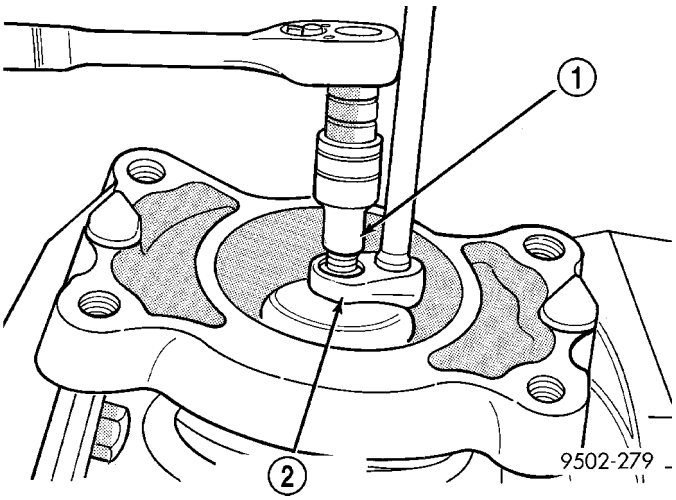

Fig. 46 Retainer Nut Removal/Installation

1 - SHOCK ABSORBER SOCKET SNAP-ON A136 ®
2 - CROW FOOT

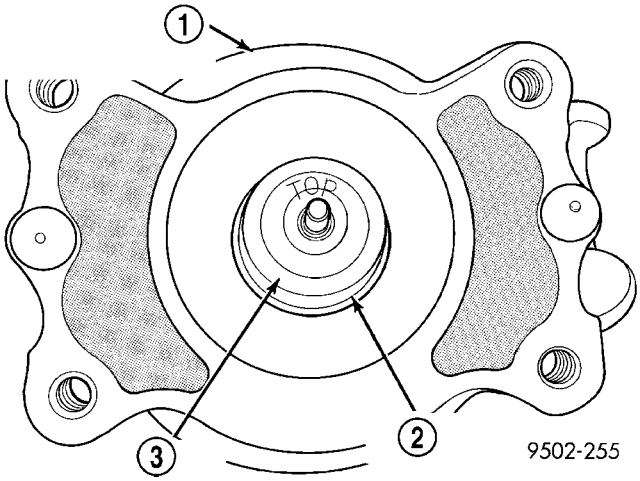

Fig. 47 Washer

1 - SHOCK ABSORBER/UPPER CONTROL ARM MOUNTING BRACKET
2 - ISOLATOR BUSHING
3 - WASHER

NOTE: Before removing the coil spring from the spring compressor, note the position of the lower coil spring end to the spring compressor. The coil spring will need to be in this position on reassembly for proper coil spring-to-shock absorber and upper mounting bracket orientation.

(7) Release the tension from the coil spring by backing off the compressor drive fully. Push back the compressor upper hooks and remove the upper mounting bracket and upper control arm from the coil spring.

(8) Note the position of the coil spring in the spring compressor as listed in the above note before removal. This is necessary for proper alignment of the shock assembly components when reassembly is made. Remove the coil spring from the spring compressor.

(9) Remove the shock absorber rod upper isolator bushing from the upper (shock absorber/upper control arm) mounting bracket (Fig. 48).

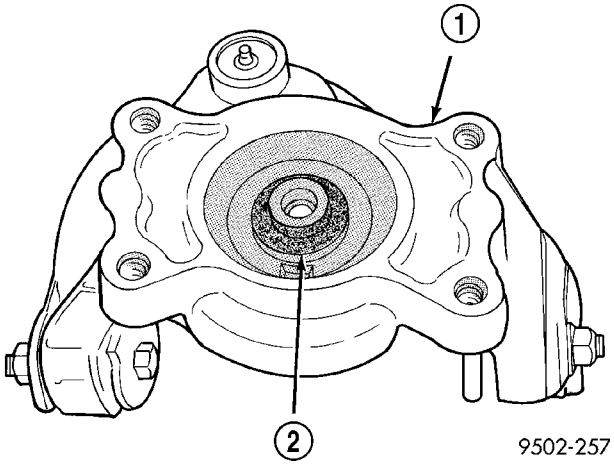

Fig. 48 Shock Absorber Rod Upper Isolator Bushing

1 - SHOCK ABSORBER/CONTROL ARM MOUNTING BRACKET
2 - SHOCK ABSORBER ROD UPPER ISOLATOR BUSHING

(10) Remove the shock absorber rod lower isolator bushing and sleeve from the upper (shock absorber/upper control arm) mounting bracket (Fig. 49). Remove upper coil spring isolator from mounting bracket.

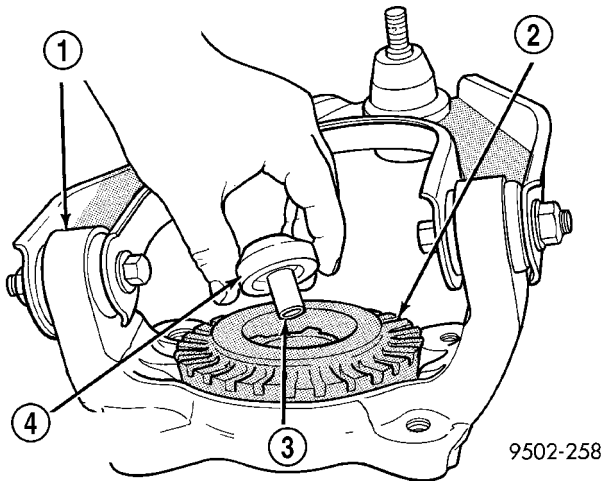

Fig. 49 Shock Absorber Rod Lower Isolator Bushing

1 - SHOCK ABSORBER/CONTROL ARM MOUNTING BRACKET
2 - UPPER SPRING ISOLATOR
3 - SLEEVE
4 - LOWER ISOLATOR BUSHING

NOTE: If removal of the upper control arm is necessary, (Refer to 2 - SUSPENSION/FRONT/UPPER CONTROL ARM - REMOVAL).

(11) Remove the lower shock rod bushing retainer washer from the shock absorber rod (Fig. 50).

SHOCK ASSEMBLY (Continued)

(12) Remove the dust shield and cup as an assembly from the shock absorber rod by pulling both straight up and off the shock rod (Fig. 50). The jounce bumper may come off at the same time. Remove the jounce bumper and metal collar.

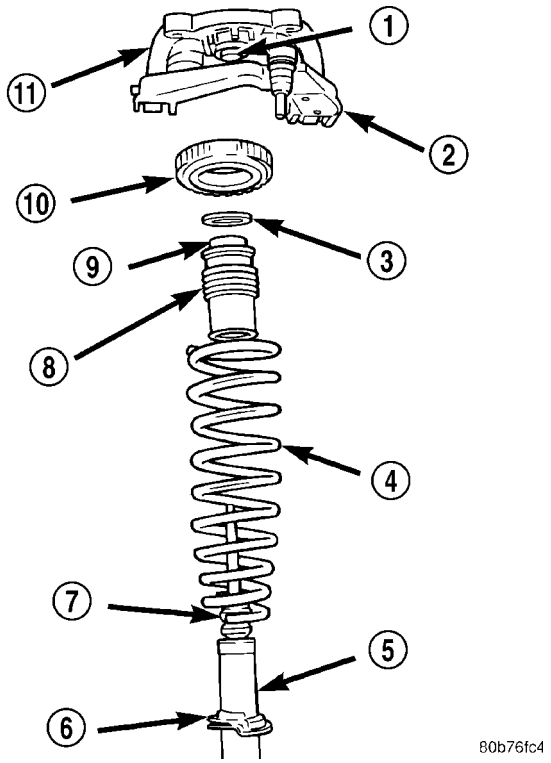

Fig. 50 Shock Assembly Components

1 - SHOCK ABSORBER ROD BUSHING
2 - UPPER CONTROL ARM
3 - RETAINER WASHER
4 - COIL SPRING
5 - SHOCK ABSORBER
6 - LOWER SPRING ISOLATOR
7 - JOUNCE BUMPER
8 - DUST SHIELD
9 - CUP
10 - UPPER SPRING ISOLATOR
11 - UPPER MOUNTING BRACKET

(13) Remove the lower spring isolator (Fig. 50) from the lower spring seat on the shock absorber.

(14) Inspect the shock assembly components for the following and replace as necessary:

- Inspect the shock for any condition of rod binding over the full stroke of the shaft.
- Check the upper mounting bracket for cracks, distortion and any sign of damage.
- Inspect the upper mounting bracket-upper control bushings for deterioration.
- Check the upper and lower shock rod isolator bushings for severe deterioration.
- Check the upper and lower spring isolators for severe deterioration.
- Inspect the dust shield for rips and deterioration.
- Inspect the jounce bumper for cracks and signs of deterioration.
- Inspect the coil spring for any sign of damage to the coating.

ASSEMBLY - SHOCK ASSEMBLY

For the disassembly and assembly of the shock assembly, use strut spring compressor Pentastar Service Equipment (PSE) tool W-7200, or the equivalent, to compress the coil spring. Follow the manufacturer's instructions closely.

NOTE: If the coil spring, upper mounting bracket, rod bushings, upper coil spring isolator, and upper control arm have been removed from the spring compressor, proceed with the next step, otherwise, proceed with step 7.

NOTE: If installation of the upper control arm on the upper mounting bracket is necessary, (Refer to 2 - SUSPENSION/FRONT/UPPER CONTROL ARM - INSTALLATION).

(1) Install the upper coil spring isolator on the upper (shock absorber/upper control arm) mounting bracket (Fig. 49).

CAUTION: The top and bottom shock absorber rod isolator bushings are unique to the position which they are installed on the rod. When installing the bushings on the rod, attention must be paid to their location so they are installed correctly (Fig. 51).

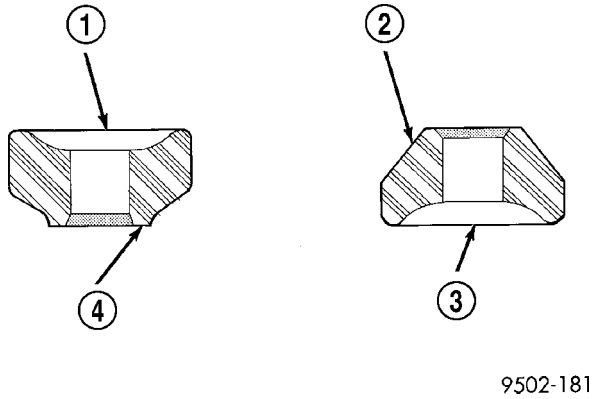

Fig. 51 Shock Absorber Rod Bushing Identification (Typical)

1 - INSTALL ON SHOCK ABSORBER ROD IN THIS DIRECTION
2 - SHOCK ABSORBER ROD UPPER ISOLATOR BUSHING
3 - INSTALL ON SHOCK ABSORBER ROD IN THIS DIRECTION
4 - SHOCK ABSORBER ROD LOWER ISOLATOR BUSHING

(2) Install the sleeve into the lower shock absorber rod isolator bushing (Fig. 49). Install the shock absorber rod lower isolator bushing and sleeve in the bottom of the upper (shock absorber/upper control

SHOCK ASSEMBLY (Continued)

arm) mounting bracket as shown (Fig. 49). From the top, install the shock absorber rod upper isolator bushing into the center of the upper mounting bracket over the sleeve protruding from the lower isolator bushing (Fig. 48). The smaller end of each bushing is to face away from the upper mounting bracket once installed.

(3) Place the lower end (smaller diameter) of the coil spring in the spring compressor supported by the lower hooks, following the manufacturer's instructions. Position the coil spring lower end tip at the position it was at before coil spring removal from the compressor as noted in Step 8 of DISASSEMBLY (Refer to 2 - SUSPENSION/FRONT/SHOCK - DISASSEMBLY). Proper orientation of the spring in the compressor is necessary for proper alignment of all shock assembly components.

(4) Install the upper (shock absorber/upper control arm) mounting bracket on top of the coil spring matching the coil spring tip to the built-in step in the isolator on the upper mounting bracket. Position the upper control arm ball joint so it lies directly below the front upper hook as shown (Fig. 45).

(5) Position the upper hooks on top of the upper mounting bracket as shown (Fig. 45).

(6) Compress the coil spring.

(7) Install the lower spring isolator on the lower spring seat of the shock absorber (Fig. 50). When installing the spring isolator, be sure the isolator sets in the notch made for the lower coil spring end.

(8) Install the jounce bumper on the shock rod (Fig. 52). Install the jounce bumper with the pointed end pointing downward.

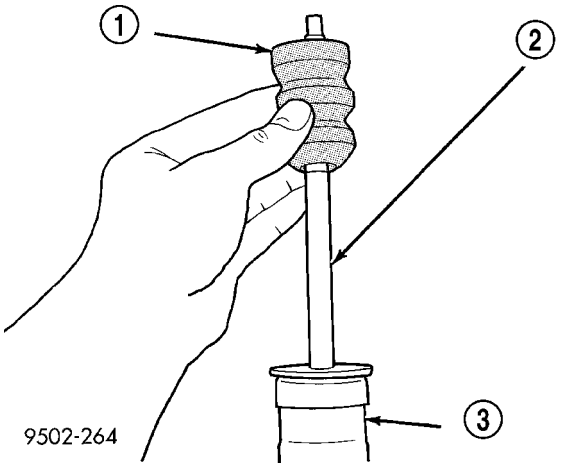

Fig. 52 Jounce Bumper Installation

1 - JOUNCE BUMPER
2 - SHOCK ABSORBER ROD
3 - SHOCK ABSORBER

(9) Install the collar, undercut side facing down, on the rod of the shock absorber (Fig. 53). Be sure the collar is positioned squarely on the step of the shock absorber rod.

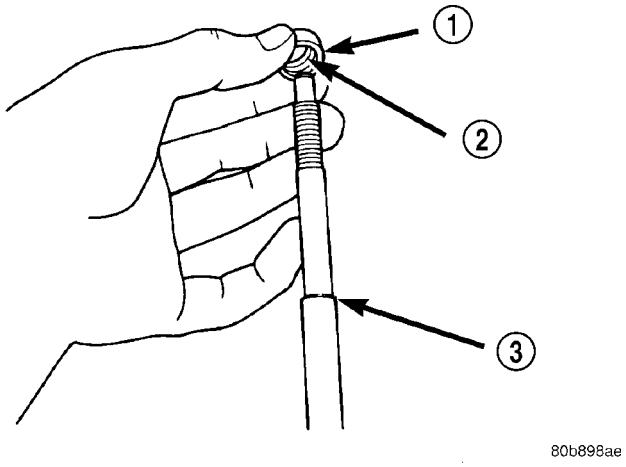

Fig. 53 Shock Absorber Rod Collar Installation

1 - COLLAR
2 - UNDERCUT
3 - SHOCK ABSORBER ROD STEP

(10) Install the dust shield and cup (Fig. 50) onto the shock rod until the cup contacts the collar just installed. The dust boot will snap over the jounce bumper. Install the lower shock rod bushing retainer washer.

(11) Install the shock through the bottom of the coil spring until the lower spring seat contacts the lower end of the coil spring. The lower coil spring end should set into the notch of the shock absorber lower seat and isolator. Install the clamp temporarily securing the shock absorber to the coil spring (Fig. 44).

(12) Install the upper shock rod bushing retainer washer. Make sure the concave side is facing up.

(13) Install the shock assembly retainer nut. Hold the shock rod from rotating using special socket Snap-On A136 ®, or an equivalent, and tighten the retainer nut using a crow foot wrench (on the end of a torque wrench and extension) to a torque of 55 N·m (40 ft. lbs.) (Fig. 46).

(14) Slowly release the tension from the coil spring by backing off the compressor drive fully. As the tension is relieved, make sure the upper mounting bracket, isolator, and coil spring align properly. Remove the clamp from the lower end of the coil spring and shock. Push back the spring compressor upper and lower hooks, then remove the shock assembly from the spring compressor.

(15) Install shock assembly on the vehicle. (Refer to 2 - SUSPENSION/FRONT/SHOCK - INSTALLATION)

SHOCK ASSEMBLY (Continued)

INSTALLATION - SHOCK ASSEMBLY

(1) Install the shock assembly, with the clevis removed, into shock tower. Aligning the 2 locating pins and the 4 mounting holes on the upper control arm shock absorber mount with the 4 holes in shock tower. Install the 4 upper control arm mount to shock tower mounting bolts (Fig. 43). Tighten the 4 bolts to a torque of 95 N·m (70 ft. lbs.).

(2) Install the clevis on the shock absorber. Clevis is installed by tapping it onto the fluid reservoir of the shock absorber using a soft (brass) drift until fully seated against locating tab on shock absorber (Fig. 54). Orientation tab on locating tab must be positioned in the split of the clevis (Fig. 54).

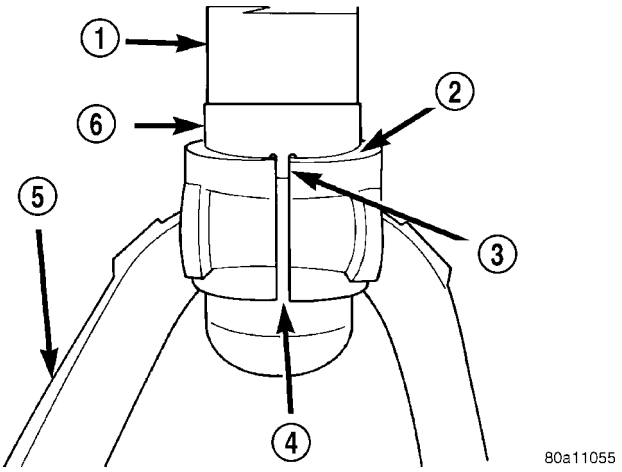

Fig. 54 Clevis Correctly Installed On Shock Absorber

1 - SHOCK ABSORBER
2 - SHOCK CLEVIS MUST BE INSTALLED FLUSH AGAINST LOCATING TAB HERE
3 - ORIENTATION TAB
4 - CLEVIS SPLIT
5 - SHOCK CLEVIS
6 - LOCATING TAB

(3) Install the pinch bolt retaining the shock clevis to the shock absorber (Fig. 41). Tighten the pinch bolt to a torque of 88 N·m (65 ft. lbs.)

(4) Install the clevis bracket to lower control arm thru-bolt (Fig. 42). Do not tighten the thru-bolt at this time.

(5) Install upper ball joint into steering knuckle. Install nut on ball joint stud. Tighten nut to a torque of 27 N·m (20 ft. lbs.).

(6) Install the routing bracket for the wheel speed sensor cable (Fig. 39) on the steering knuckle. Install and securely tighten the routing bracket attaching bolt (Fig. 39).

CAUTION: When supporting lower control arm with jack stand, do not position jack stand under the ball joint cap on the lower control arm. Position in area of lower control arm shown in (Fig. 55).

(7) Lower vehicle to the ground with a jack stand positioned under the lower control arm (Fig. 55). Continue to lower vehicle so the total weight of the vehicle is supported by the jack stand and lower control arm.

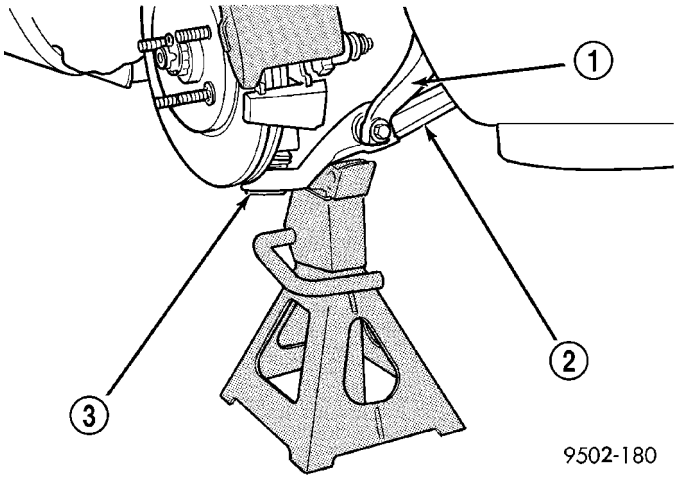

Fig. 55 Lower Control Arm Correctly Supported By Jack Stand

1 - SHOCK ABSORBER CLEVIS
2 - LOWER CONTROL ARM
3 - BALL JOINT CAP

(8) Tighten the shock absorber clevis to lower control arm bushing thru-bolt nut to a torque of 88 N·m (65 ft. lbs.).

(9) Raise the vehicle, then remove the jack stand.

(10) Install the tire and wheel assembly. Progressively tighten the wheel mounting nuts in a criss-cross sequence until all nuts are torqued to half specification. Then repeat the tightening sequence to the full specified torque of 135 N·m (100 ft. lbs.).

(11) Lower the vehicle.

STABILIZER BAR

DESCRIPTION

The stabilizer bar interconnects both front lower control arms of the vehicle and is attached to the front suspension cradle and the underbody of the vehicle.

Attachment of the stabilizer bar to the front suspension cradle is through 2 rubber-isolator bushings and bushing retainers. The stabilizer bar to lower control arm attachment is done utilizing a ball joint type, stabilizer bar attaching link. All parts of the stabilizer bar are replaceable as individual components, and the bushings attaching the stabilizer bar to crossmember are split for easy removal and installation.

STABILIZER BAR (Continued)

OPERATION

Jounce and rebound movements affecting one wheel are partially transmitted to the opposite wheel of the vehicle to stabilize body roll through the stabilizer bar.

DIAGNOSIS AND TESTING - STABILIZER BAR

Inspect for broken or distorted stabilizer bar bushings, bushing retainers, and worn or damaged stabilizer bar to control arm attaching links.

REMOVAL

REMOVAL - STABILIZER BAR

(1) Raise vehicle on jack stands or centered on a frame contact type hoist. (Refer to LUBRICATION & MAINTENANCE/HOISTING - SERVICE PROCEDURE).

(2) Remove nuts and stabilizer bar attaching link assemblies from the front lower control arms (Fig. 56). When removing attaching link nut, keep stud from turning by installing an allen wrench in the end of the stud (Fig. 56).

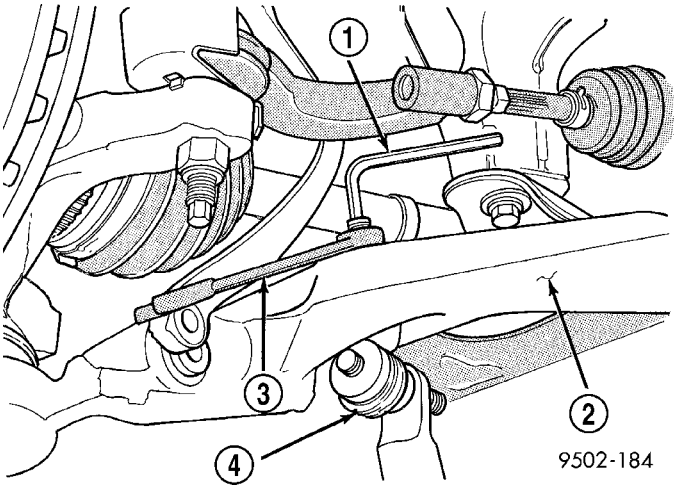

Fig. 56 Stabilizer Bar Attaching Link Nut Removal

1 - ALLEN WRENCH
2 - LOWER CONTROL ARM
3 - WRENCH
4 - STABILIZER BAR LINK ASSEMBLY

(3) Remove the 4 bolts attaching the stabilizer bar bushing retainers to the front suspension crossmember and body (Fig. 57). Then remove the stabilizer bar assembly from the vehicle.

STABILIZER BAR INSPECTION

Inspect for broken or distorted stabilizer bar bushings, clamps and attaching links. If stabilizer bar to front crossmember bushing replacement is required, bushing can be removed using the stabilizer bar bushing removal procedure in the Disassembly And Assembly section in this group of the service manual.

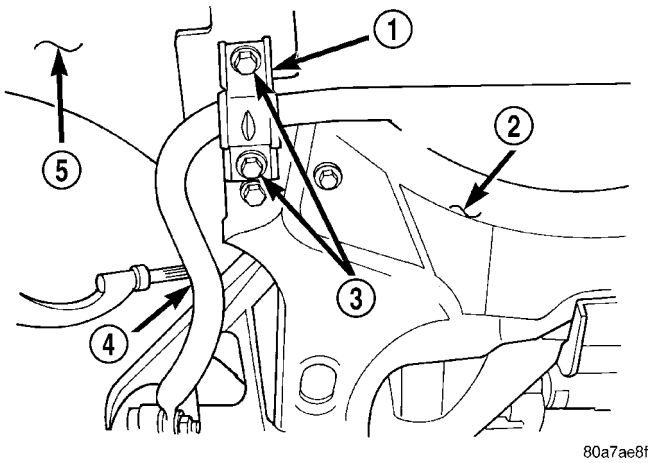

Fig. 57 Stabilizer Bar Bushing Retainer Attaching Bolts

1 - STABILIZER BAR BUSHING CLAMP
2 - FRONT SUSPENSION CROSSMEMBER
3 - ATTACHING BOLTS
4 - STABILIZER BAR
5 - VEHICLE BODY

If inspection determines that replacement of a stabilizer bar to lower control arm attachment link is required, replace the link before installing stabilizer bar.

REMOVAL - STABILIZER BAR BUSHING (FRONT)

(1) Bend back the 4 crimp locations on the stabilizer bar bushing retainer (Fig. 58).

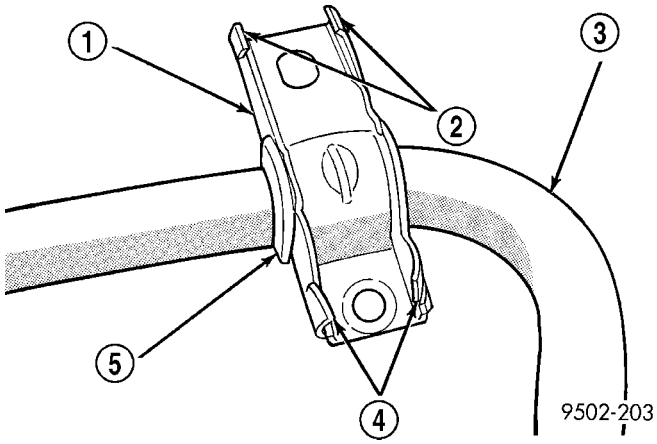

Fig. 58 Stabilizer Bar Bushing Retainer

1 - STABILIZER BAR BUSHING RETAINER
2 - CRIMPS
3 - STABILIZER BAR
4 - CRIMPS
5 - STABILIZER BAR BUSHING

(2) Separate the stabilizer bar bushing retainer.

(3) Stabilizer bar bushings are removed by opening slit and peeling bushing off stabilizer bar.

STABILIZER BAR (Continued)

INSTALLATION

INSTALLATION - STABILIZER BAR

(1) Position stabilizer bar and bushings as an assembly into front crossmember. Install the stabilizer bar bushing retainer to crossmember and body attaching bolts (Fig. 57).

(2) Tighten the bushing retainer attaching bolts to a torque of 61 N·m (45 ft. lbs.).

(3) Align stabilizer bar attaching link assemblies with attaching link mounting holes in the lower control arms. Install stabilizer bar attaching links into both lower control arms. Install the attaching link to lower control arm retaining nuts. Torque the stabilizer bar attaching link nuts to 101 N·m (75 ft. lbs.).

INSTALLATION - STABILIZER BAR BUSHING

(1) Install new stabilizer bar bushings on the stabilizer bar. **Bushings must be installed on sway bar with slit in bushing facing front of vehicle when sway bar is installed.**

(2) Install bushing retainers back on stabilizer bar bushings.

UPPER BALL JOINT

DESCRIPTION

The ball joint is pressed into the upper control arm and has a tapered stud for attachment to the steering knuckle. The ball joint stud is attached and locked into the steering knuckle using a special nut. The ball joint is a sealed-for-life type and requires no maintenance. If the ball joint is defective it will require replacement of the entire upper control arm.

DIAGNOSIS AND TESTING - UPPER BALL JOINT

(1) Raise and support vehicle so that tires clear floor. (Refer to LUBRICATION & MAINTENANCE/HOISTING - STANDARD PROCEDURE)

(2) Push inward and pull outward at top of tire noting if any movement of ball joint occurs.

(3) If movement is noted, replace upper control arm.

ALTERNATE METHOD

(1) Raise and support vehicle. (Refer to LUBRICATION & MAINTENANCE/HOISTING - STANDARD PROCEDURE)

(2) Remove tire and wheel assembly. (Refer to 22 - TIRES/WHEELS - REMOVAL)

(3) Push inward and pull outward on neck of knuckle near ball joint while observing ball joint for movement. Holding a finger against knuckle and upper control arm while performing this helps to sense movement.

(4) If movement is noted, replace upper control arm.

UPPER CONTROL ARM

DESCRIPTION

The upper control arm is a high strength steel stamping. The upper control arm uses the 2 rubber bushings of the upper control arm/shock absorber mounting bracket to isolate it from the mounting bracket and the body of the vehicle. The upper control arm is bolted to the top of the steering knuckle through the upper ball joint.

If damaged, the upper control arm is serviced only as a complete component. Inspect the upper control arm for any signs of damage. If control arm shows any sign of damage the upper control arm must be replaced. Do not attempt to repair or straighten a broken or bent upper control arm.

OPERATION

The upper control arm supports the upper end of the steering knuckle and allows for the up and down movement of the suspension during the jounce and rebound travel.

UPPER CONTROL ARM (Continued)

REMOVAL - UPPER CONTROL ARM

(1) Remove the front shock assembly from the vehicle. (Refer to 2 - SUSPENSION/FRONT/SHOCK - REMOVAL)

(2) Disassemble the shock assembly until the upper (shock absorber/upper control arm) mounting bracket is removed from the coil spring. (Refer to 2 - SUSPENSION/FRONT/SHOCK - DISASSEMBLY)

(3) Remove the 2 bolts attaching the upper control arm to the bushings in the upper mounting bracket (Fig. 59).

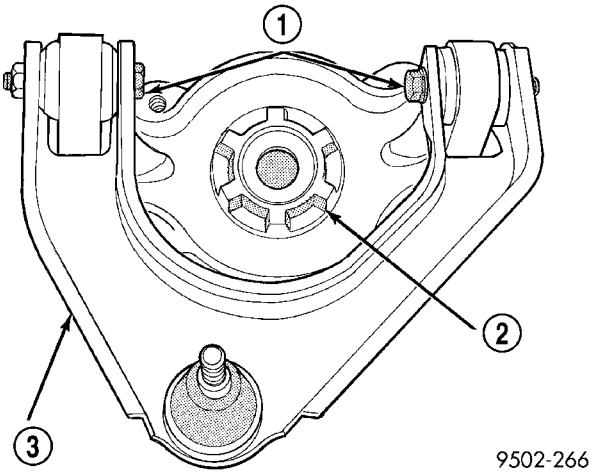

Fig. 59 Upper Control Arm To Mounting Bracket Attachment

1 - CONTROL ARM MOUNTING BOLTS
2 - UPPER CONTROL ARM MOUNTING BRACKET
3 - UPPER CONTROL ARM

(4) Remove the upper control arm from the mounting bracket.

INSPECTION - UPPER CONTROL ARM

If damaged, the upper control arm is serviced only as a complete component. Inspect the upper control arm for any signs of damage. If control arm shows any sign of damage the upper control arm must be replaced. Do not attempt to repair or straighten a broken or bent upper control arm.

INSTALLATION - UPPER CONTROL ARM

(1) Install the upper control arm on the upper (shock absorber/upper control arm) mounting bracket.

(2) Install the 2 bolts attaching the upper control arm to the bushings in the mounting bracket (Fig. 59). The bolts must be installed from center, so the heads are toward the coil spring when it is installed. **The bolts MUST be installed so the head of the bolt will be toward the coil spring when the mounting bracket is installed on shock absorber (Fig. 59).**

CAUTION: For clearance reasons the control arm mounting bolts must be installed from center, so the heads are toward the coil spring when it is installed. Otherwise the bolts may rub the coil spring, damaging it.

(3) Install the control arm mounting bolt nuts. Position the control arm at a 90 degree angle to the mounting bracket and tighten the bolts to a torque of 90 N·m (66 ft. lbs.).

(4) Reinstall the upper mounting bracket and control arm on the coil spring. Reassemble the front shock assembly. (Refer to 2 - SUSPENSION/FRONT/SHOCK - ASSEMBLY)

(5) Reinstall the front shock assembly on the vehicle. (Refer to 2 - SUSPENSION/FRONT/SHOCK - INSTALLATION)

REAR SUSPENSION

TABLE OF CONTENTS

	page
REAR SUSPENSION	
DESCRIPTION - REAR SUSPENSION	32
OPERATION - REAR SUSPENSION	32
WARNING	
WARNINGS AND CAUTIONS	32
SPECIFICATIONS	
REAR SUSPENSION FASTENER TORQUE	33
SPECIAL TOOLS	
REAR SUSPENSION	33
HUB / BEARING	
DESCRIPTION	34
OPERATION	34
DIAGNOSIS AND TESTING - HUB AND BEARING	34
REMOVAL	34
INSTALLATION	34
KNUCKLE	
DESCRIPTION	34
OPERATION	34
DIAGNOSIS AND TESTING - KNUCKLE	34
REMOVAL	34
INSTALLATION	37
LATERAL LINK	
DESCRIPTION	38
OPERATION	38
DIAGNOSIS AND TESTING - LATERAL LINKS	38
REMOVAL	38
INSTALLATION	39
SHOCK ASSEMBLY	
DESCRIPTION - SHOCK ASSEMBLY	40
OPERATION - SHOCK ASSEMBLY	40
DIAGNOSIS AND TESTING - SHOCK ASSEMBLY	40
REMOVAL - SHOCK ASSEMBLY	40
DISASSEMBLY - SHOCK ASSEMBLY	41
ASSEMBLY - SHOCK ASSEMBLY	42
INSTALLATION - SHOCK ASSEMBLY	43
STABILIZER BAR	
DESCRIPTION	43
OPERATION	43
DIAGNOSIS AND TESTING - STABILIZER BAR	43
REMOVAL	44
INSTALLATION	44
TRAILING LINK	
DESCRIPTION	45
OPERATION	45
DIAGNOSIS AND TESTING - TRAILING LINK	45
REMOVAL	45
INSTALLATION	45
UPPER BALL JOINT	
DESCRIPTION	47
DIAGNOSIS AND TESTING - UPPER BALL JOINT	47
UPPER CONTROL ARM	
DESCRIPTION	47
OPERATION	47
REMOVAL	47
DISASSEMBLY - UPPER BALL JOINT	50
INSPECTION	50
ASSEMBLY - UPPER BALL JOINT	50
INSTALLATION	51

REAR SUSPENSION

DESCRIPTION - REAR SUSPENSION

The rear suspension used on this vehicle is a fully independent short and long arm style suspension. Each side of the rear suspension consists of these major components:

- a shock assembly
- a knuckle
- an upper control arm
- two lateral links
- a trailing link
- a stabilizer bar (one per vehicle shared by each side)

OPERATION - REAR SUSPENSION

The rear suspension allows each rear wheel on vehicle to adapt to different road surfaces and conditions without affecting the control of the vehicle. Each side of the suspension is allowed to move independently from the other.

WARNING

WARNINGS AND CAUTIONS

WARNING: DO NOT REMOVE A SHOCK ROD NUT WHILE THE SHOCK ASSEMBLY IS INSTALLED IN VEHICLE, OR BEFORE THE SHOCK ASSEMBLY SPRING IS COMPRESSED.

REAR SUSPENSION (Continued)

CAUTION: Only frame contact or wheel lift hoisting equipment can be used on vehicles having a fully independent rear suspension. Vehicles with independent rear suspension can not be hoisted using equipment designed to lift a vehicle by the rear axle. If this type of hoisting equipment is used damage to rear suspension components will occur.

NOTE: If a rear suspension component becomes bent, damaged or fails, no attempt should be made to straighten or repair it. Always replace it with a new component.

SPECIFICATIONS

REAR SUSPENSION FASTENER TORQUE

DESCRIPTION	TORQUE
Shock Assembly:	
Body Mounting Nuts	54 N·m (40 ft. lbs.)
Knuckle Bolt/Nut	95 N·m (70 ft. lbs.)
Rod To Upper Mount Nut	55 N·m (40 ft. lbs.)
Knuckle:	
Brake Adapter Mounting Bolts	61 N·m (45 ft. lbs.)
Hub And Bearing:	
Knuckle Retaining Nut	250 N·m (185 ft. lbs.)
Wheel Mounting Nuts	135 N·m (100 ft. lbs.)
Upper Control Arm:	
Pivot Bar To Crossmember	107 N·m (80 ft. lbs.)
Lateral Links:	
To Knuckle Nuts	108 N·m (80 ft. lbs.)
Jam Nuts	92 N·m (68 ft. lbs.)
To Suspension Crossmember Nuts	108 N·m (80 ft. lbs.)
Trailing Link:	
Shaft Nuts (Front And Rear)	99 N·m (73 ft. lbs.)
Bracket To Body Mounting Bolts	34 N·m (25 ft. lbs.)
Ball Joint:	
Stud Nut	27 N·m (20 ft. lbs.)
Rear Suspension Crossmember:	
Body Attaching Bolts	108 N·m (80 ft. lbs.)
Stabilizer Bar:	
Isolator Bushing Retainer Bolt	28 N·m (20 ft. lbs.)
Lateral Link Stabilizer Link Nut	35 N·m (26 ft. lbs.)
Bracket To Crossmember Bolts	28 N·m (20 ft. lbs.)

SPECIAL TOOLS

REAR SUSPENSION

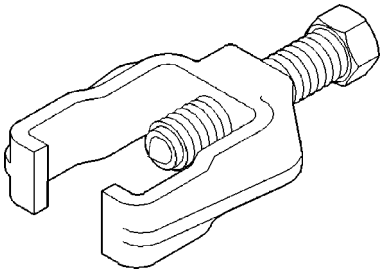

Puller, Pitman Arm CT-1106

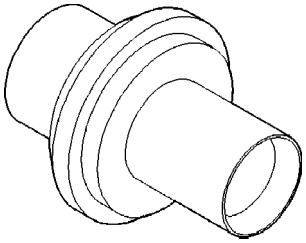

Remover, Suspension Arm Bushing And Ball Joint 6804

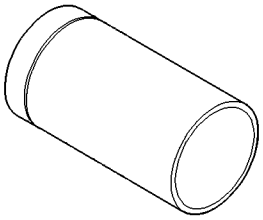

Installer, Ball Joint

HUB / BEARING

DESCRIPTION

The hub and bearing is a combined rear wheel hub and wheel bearing unit. All vehicles are equipped with permanently lubricated and sealed for life rear hub and bearing assemblies. There is no periodic lubrication or maintenance recommended for these units.

The hub and bearing is mounted to the rear knuckle's spindle using a retaining nut. The tire and wheel assembly, and rear brake drum or disc attaches to the studs protruding from the hub flange with wheel mounting studs.

OPERATION

The hub and bearing has internal bearings that allow it to rotate with the tire and wheel.

DIAGNOSIS AND TESTING - HUB AND BEARING

The rear hub and bearing assembly is designed for the life of the vehicle and should require no maintenance. The following procedure may be used for evaluation of bearing condition.

With wheel and brake drum removed, rotate flanged outer ring of hub. Excessive roughness, lateral play or resistance to rotation may indicate dirt intrusion or bearing failure. If the rear wheel bearings exhibit these conditions during inspection, the hub and bearing assembly should be replaced.

Damaged bearing seals and resulting excessive grease loss may also require bearing replacement. Moderate grease loss from bearing is considered normal and should not require replacement of the hub and bearing assembly.

REMOVAL

(1) Raise vehicle. (Refer to LUBRICATION & MAINTENANCE/HOISTING - STANDARD PROCEDURE).

(2) Remove rear wheel and tire assembly.

(3) If equipped with rear disc brakes, remove the rear brake caliper and rotor. (Refer to 5 - BRAKES/HYDRAULIC/MECHANICAL/ROTORS - REMOVAL). Remove the brake rotor by pulling the rotor straight off the wheel mounting studs.

(4) If equipped with rear drum brakes, remove the brake drum. (Refer to 5 - BRAKES/HYDRAULIC/MECHANICAL/DRUM - REMOVAL)

(5) Remove dust cap from rear hub and bearing assembly by prying it off.

(6) Remove hub and bearing retaining nut.

(7) Remove rear hub and bearing from the spindle by pulling it straight off the spindle.

INSTALLATION

(1) Install the hub and bearing assembly on the knuckle spindle. Install a NEW retaining nut. Tighten the retaining nut to a torque of 250 N·m (185 ft. lbs.).

(2) Install the hub and bearing dust cap using a soft faced hammer.

(3) If equipped with rear disc brakes, install the brake rotor and caliper. (Refer to 5 - BRAKES/HYDRAULIC/MECHANICAL/ROTOR - INSTALLATION)

(4) If equipped with rear drum brakes, install the drum and adjust brake shoes as necessary. (Refer to 5 - BRAKES/HYDRAULIC/MECHANICAL/DRUM - INSTALLATION)

(5) Install the rear tire and wheel assembly. Progressively tighten all wheel stud nuts in crisscross pattern to 135 N·m (100 ft. lbs.) torque.

(6) Lower the vehicle.

KNUCKLE

DESCRIPTION

A cast iron rear knuckle is attached to each side of the vehicle through the upper control arm and ball joint, the rear shock assembly, the lateral links and the trailing link. The knuckle serves as a mounting point for the rear hub and bearing, tire and wheel, and rear brakes.

OPERATION

The knuckle moves up and down with the tire and wheel under jounce and rebound conditions while acting as a mount for the rear hub and bearing, tire and wheel, and rear brakes. The lateral movement of the rear knuckle is controlled using two lateral arms attached to the bottom of the knuckle and by the upper control arm attached to the top of the knuckle.

DIAGNOSIS AND TESTING - KNUCKLE

Inspect the knuckle for physical damage. If it is determined that the knuckle is cracked, bent or broken when servicing the vehicle, no attempt is to be made to repair or to straighten the knuckle. The rear knuckle is not a repairable component of the rear suspension and must be replaced if found to be damaged in any way.

REMOVAL

(1) Raise vehicle. (Refer to LUBRICATION & MAINTENANCE/HOISTING - STANDARD PROCEDURE).

(2) Remove rear wheel and tire assembly.

(3) If vehicle is equipped with antilock brakes (ABS), remove rear wheel speed sensor from brake flex hose routing bracket (Fig. 1).

KNUCKLE (Continued)

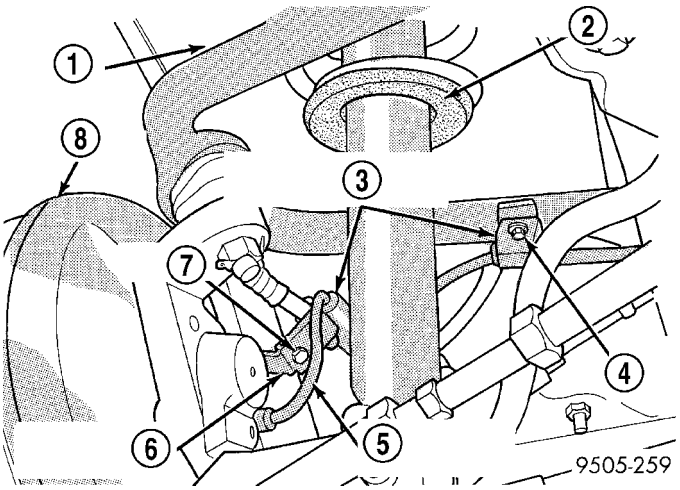

Fig. 1 Rear Wheel Speed Cable Routing And Attachment

1 - UPPER CONTROL ARM
2 - SHOCK ABSORBER
3 - SPEED SENSOR CABLE ROUTING CLIPS
4 - BOLT
5 - SPEED SENSOR CABLE
6 - BRAKE FLEX HOSE BRACKET
7 - BOLT
8 - BRAKES

(4) If equipped with ABS, remove wheel speed sensor head mounting bolt (Fig. 10).

(5) If equipped with rear drum brakes, remove brake drum. (Refer to 5 - BRAKES/HYDRAULIC/MECHANICAL/DRUM - REMOVAL)

(6) If equipped with rear disc brakes, remove caliper and rotor. (Refer to 5 - BRAKES/HYDRAULIC/MECHANICAL/BRAKE PADS/SHOES - REMOVAL)

(7) Remove rear hub and bearing assembly retaining nut and washer (Fig. 2), then remove hub and bearing assembly.

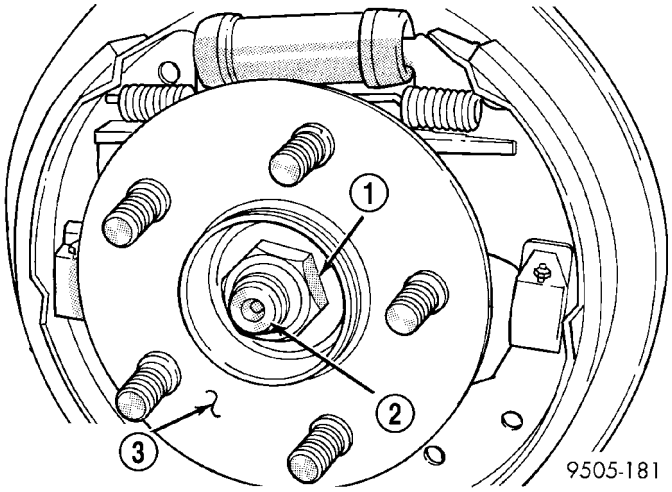

Fig. 2 Hub/Bearing Assembly Retaining Nut

1 - RETAINING NUT
2 - SPINDLE
3 - HUB/BEARING ASSEMBLY

(8) If equipped with rear drum brakes, remove parking brake cable from parking brake actuating lever, then remove cable from drum brake support plate. (Refer to 5 - BRAKES/PARKING BRAKE/CABLES - REMOVAL)

(9) Remove four bolts attaching drum brake support plate/disc brake adapter to knuckle (Fig. 3).

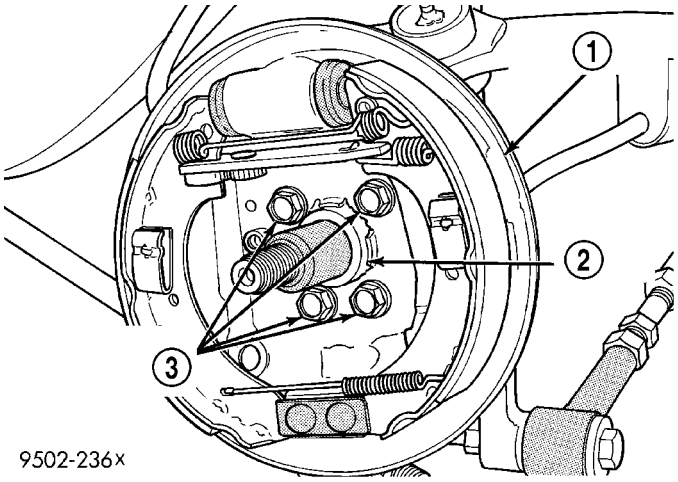

Fig. 3 Rear Brake Support Plate Mounting Bolts

1 - REAR BRAKE SUPPORT PLATE
2 - REAR KNUCKLE
3 - BRAKE SUPPORT PLATE ATTACHING BOLTS

(10) Remove drum brake support plate, brake shoes and wheel cylinder assembly/disc brake adapter from knuckle. **It is not necessary to remove brake flex hose from drum brake wheel cylinder when removing support plate.** Once drum brake assembly is removed, hang plate from rear shock assembly using mechanics wire as shown (Fig. 4). Do not allow drum brake assembly to hang by flex hose.

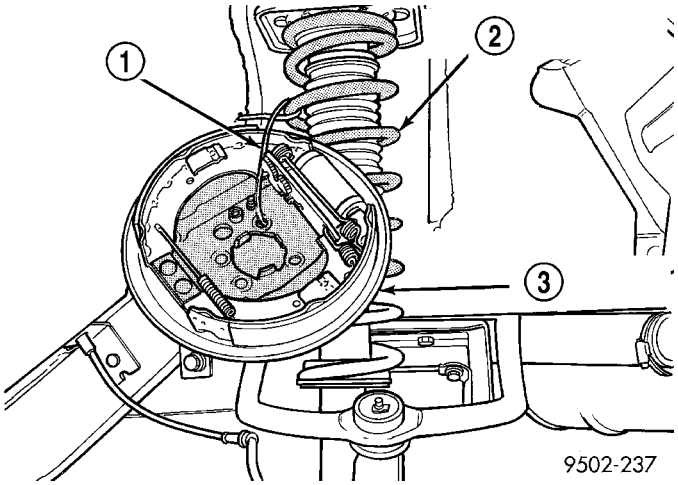

Fig. 4 Correctly Stored Rear Brake Support Plate

1 - WIRE HANGER
2 - REAR SHOCK ABSORBER ASSEMBLY
3 - REAR BRAKE SUPPORT PLATE

KNUCKLE (Continued)

(11) Remove nuts and bolts attaching the forward and rear lateral links (Fig. 5) to knuckle.

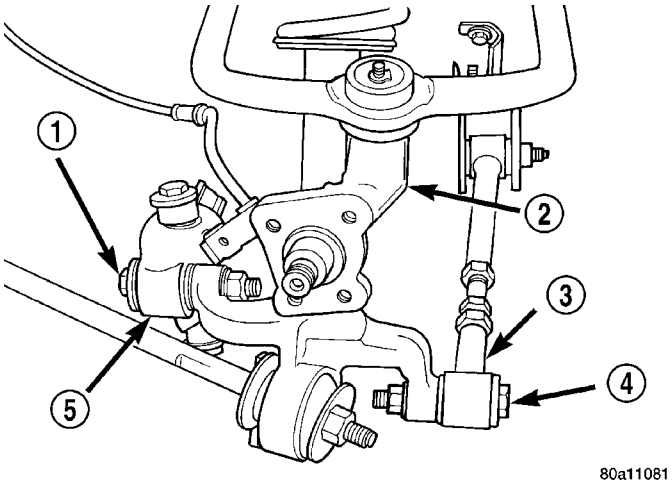

Fig. 5 Lateral Link Attachment To Rear Knuckle

1 - BOLT
2 - KNUCKLE
3 - REAR LATERAL LINK
4 - BOLT
5 - FORWARD LATERAL LINK

(12) Back off nut retaining upper control arm ball joint to knuckle until it is flush with the end of the ball joint stud. Leaving the nut on in this fashion will protect threads from damage during next step.

(13) Release ball joint stud from knuckle using Puller, Special Tool, CT-1106 (Fig. 6).

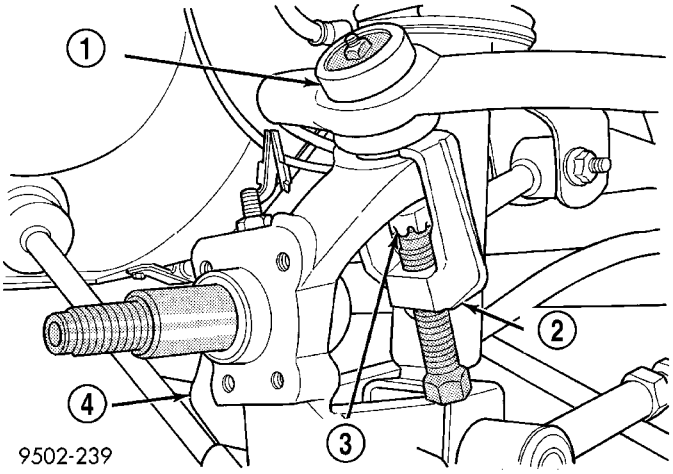

Fig. 6 Removing Ball Joint Stud From Knuckle

1 - BALL JOINT
2 - SPECIAL TOOL CT1106
3 - BALL JOINT STUD
4 - KNUCKLE

(14) Remove nut retaining upper control arm ball joint to knuckle.

(15) Remove nut and washer attaching trailing link to rear knuckle. Use a wrench on the flat of the trailing link to keep it from turning when removing nut (Fig. 7).

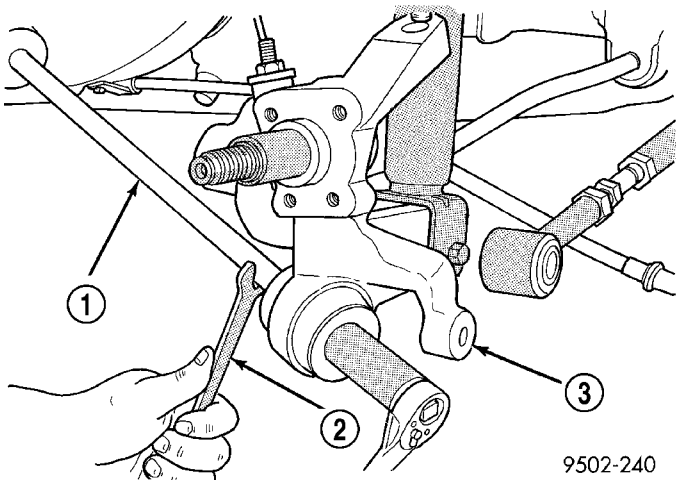

Fig. 7 Trailing Link Attachment To Rear Knuckle

1 - TENSION NUT
2 - WRENCH
3 - KNUCKLE

(16) Remove the shock absorber clevis bracket to knuckle attaching nut and bolt (Fig. 8).

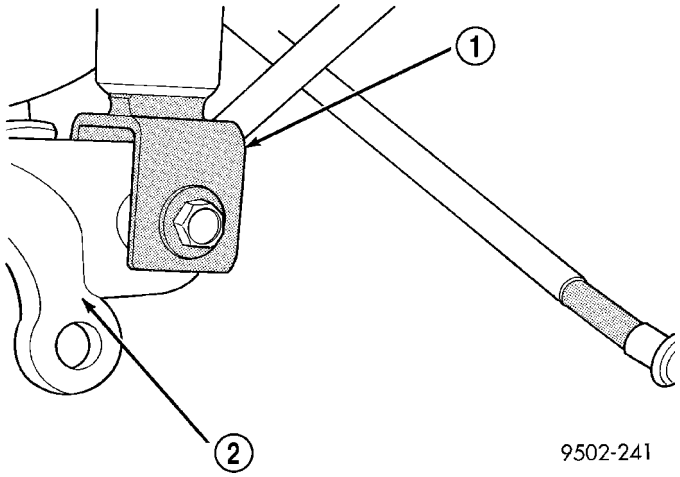

Fig. 8 Shock Absorber Attachment To Knuckle

1 - SHOCK ABSORBER CLEVIS BRACKET
2 - KNUCKLE

(17) Remove knuckle from vehicle.

KNUCKLE (Continued)

INSTALLATION

(1) Install knuckle on clevis bracket of rear shock absorber. Then install clevis bracket to shock absorber attaching bolt with head of bolt facing rear of vehicle (Fig. 8).

CAUTION: When installing trailing link bushing retainers, retainers must be installed with cupped side of retainer facing away from bushing and knuckle (Fig. 9).

(2) Install knuckle on trailing link. Install trailing link outer bushing, gold bushing retainer and retaining nut on trailing link (Fig. 9). Using a large adjustable wrench, to keep trailing link from rotating, tighten trailing link retaining nut to 99 N·m (73 ft. lbs.) torque.

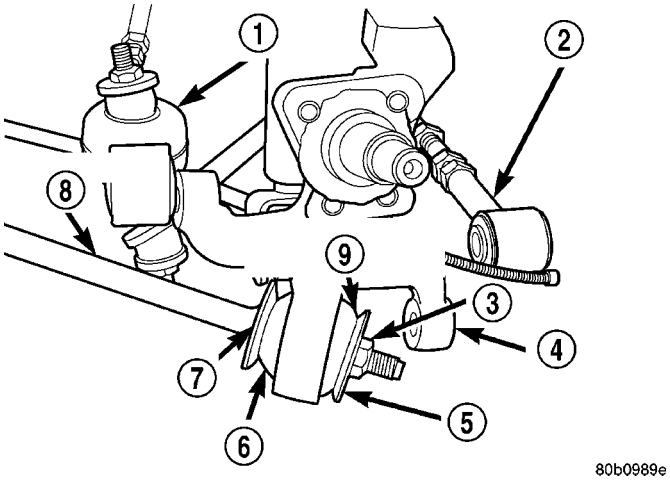

Fig. 9 Trailing Link Bushing And Retainer Installation

1 - FORWARD LATERAL ARM
2 - REAR LATERAL ARM
3 - NUT
4 - KNUCKLE
5 - OUTER TRAILING LINK RETAINER (GOLD)
6 - INNER TRAILING LINK BUSHING
7 - INNER TRAILING LINK RETAINER (BLACK)
8 - TRAILING LINK
9 - OUTER TRAILING LINK BUSHING

(3) Install upper ball joint stud into knuckle. Install and tighten the ball joint stud nut to 27 N·m (20 ft. lbs.) torque.

(4) Install front and rear lateral links and attaching nuts and bolts onto knuckle (Fig. 5). Tighten lateral links-to-knuckle attaching bolts and nuts to 108 N·m (80 ft. lbs.) torque.

(5) Install rear drum brake assembly/disc brake adapter onto knuckle. Install four mounting bolts (Fig. 3) Tighten mounting bolts to 61 N·m (45 ft. lbs.) torque.

(6) If equipped with rear drum brakes, install parking brake cable into support plate and attach to parking brake actuating lever. (Refer to 5 - BRAKES/PARKING BRAKE/CABLES - INSTALLATION)

(7) Install rear hub and bearing assembly on knuckle and install hub retaining nut. Tighten retaining nut to a torque of 250 N·m (185 ft. lbs).

(8) If equipped with rear disc brakes, install rotor and caliper. (Refer to 5 - BRAKES/HYDRAULIC/MECHANICAL/BRAKE PADS/SHOES - INSTALLATION)

(9) If equipped with rear drum brakes, install brake drum and adjust brake shoes as necessary. (Refer to 5 - BRAKES/HYDRAULIC/MECHANICAL/DRUM - INSTALLATION)

(10) If equipped with ABS, install wheel speed sensor head (Fig. 10). Tighten speed sensor head mounting bolt to 7 N·m (60 in. lbs.) torque.

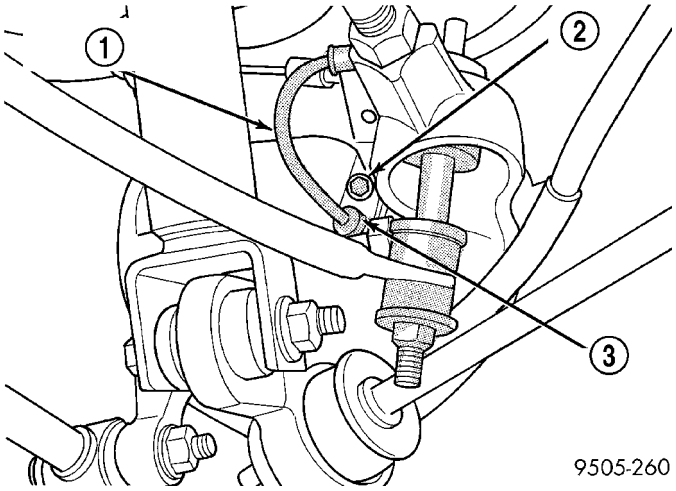

Fig. 10 Speed Sensor Head Attachment To Brake Support Plate

1 - SPEED SENSOR CABLE
2 - BOLT
3 - SPEED SENSOR HEAD

(11) If equipped with ABS, attach routing bracket for wheel speed sensor cable to brake flex hose bracket and securely tighten attaching bolt (Fig. 1).

(12) Install wheel and tire assembly on vehicle. Install wheel mounting (lug) nuts and progressively tighten nuts in crisscross sequence to 135 N·m (100 ft. lbs.) torque.

(13) Lower vehicle.

(14) Check and reset rear wheel alignment to specifications as required. (Refer to 2 - SUSPENSION/WHEEL ALIGNMENT - STANDARD PROCEDURE)

LATERAL LINK

DESCRIPTION

The lateral links connect the lower front and rear of the knuckle to the rear crossmember. They have rubber isolator bushings at each end to isolate suspension noise from the body of the vehicle. The forward link allows for stabilizer bar attachment through stabilizer bar attachment links.

OPERATION

The lateral movement of the rear knuckle is controlled by the lateral links connecting the front and rear of the knuckle to the rear suspension crossmember. The metal sleeves of the links are adjustable for setting rear wheel alignment.

DIAGNOSIS AND TESTING - LATERAL LINKS

Inspect the lateral link isolator bushings and sleeves for signs of damage or deterioration. If the lateral link isolator bushings or sleeves are damaged or are deteriorated, replacement of the lateral link assembly will be required. The isolator bushings are not serviceable as a separate component of the lateral link assembly.

Inspect the lateral links for signs of contact with the ground or road debris which has bent or caused other damage to the lateral link. If the lateral link is bent or damaged, the lateral link will require replacement. **Do not attempt to repair or straighten a lateral link.**

CAUTION: Do not apply heat to the lateral link adjusting screws or to the jam nuts, when loosening or adjusting the lateral links.

REMOVAL

CAUTION: Do not attempt to straighten or repair a lateral link. Do not apply heat to the lateral link adjusting screws or to the jam nuts, when loosening or adjusting the lateral links.

NOTE: The rear suspension lateral links are only serviced as complete assemblies. The isolator bushings used in the lateral links are not serviced as separate components.

FORWARD LATERAL LINK

(1) Raise vehicle. (Refer to LUBRICATION & MAINTENANCE/HOISTING - STANDARD PROCEDURE).

(2) Remove the rear wheel and tire assembly.

(3) Remove the rear stabilizer bar link from the forward lateral link (Fig. 11).

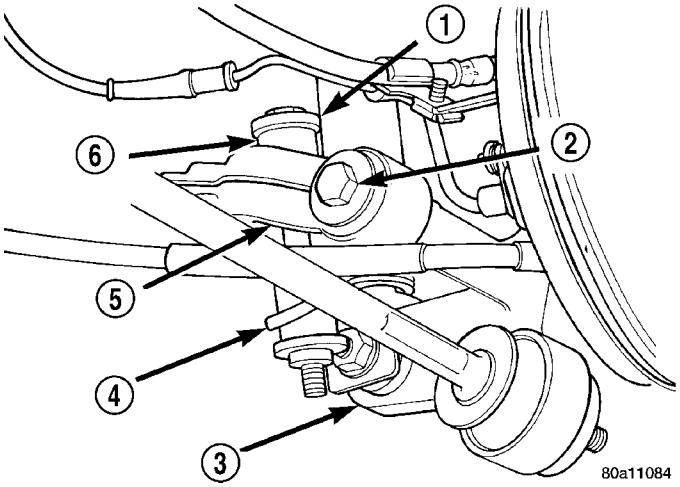

Fig. 11 Stabilizer Bar To Lateral Link Attachment

1 - WASHER
2 - BOLT AND WASHER
3 - KNUCKLE
4 - STABILIZER BAR
5 - FORWARD LATERAL LINK
6 - STABILIZER BAR ATTACHING LINK

(4) Remove the nut, bolt and washer (Fig. 11) attaching the forward lateral link to the knuckle.

(5) Remove the nut and bolt attaching the lateral link to the rear suspension crossmember (Fig. 12).

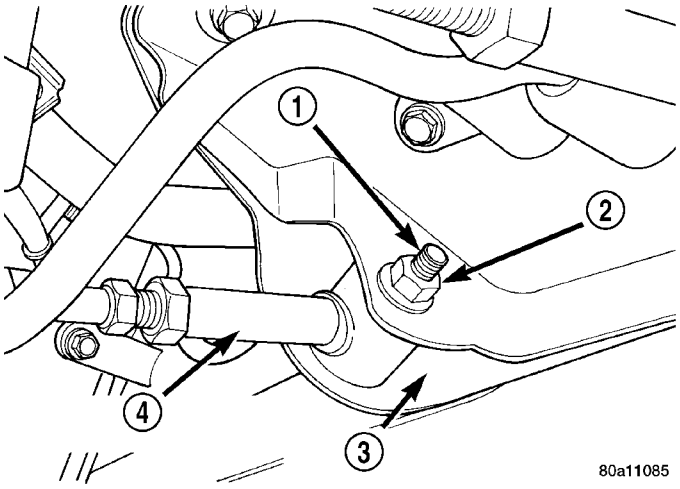

Fig. 12 Lateral Link Attachment To Rear Suspension Crossmember

1 - BOLT
2 - NUT
3 - REAR SUSPENSION CROSSMEMBER
4 - FORWARD LATERAL LINK

(6) Remove the forward lateral link from the vehicle.

LATERAL LINK (Continued)

REAR LATERAL LINK

(1) Raise vehicle. (Refer to LUBRICATION & MAINTENANCE/HOISTING - STANDARD PROCEDURE).

(2) Remove the rear wheel and tire assembly.

(3) Remove the nut, bolt and washer attaching the lateral link to the knuckle (Fig. 13).

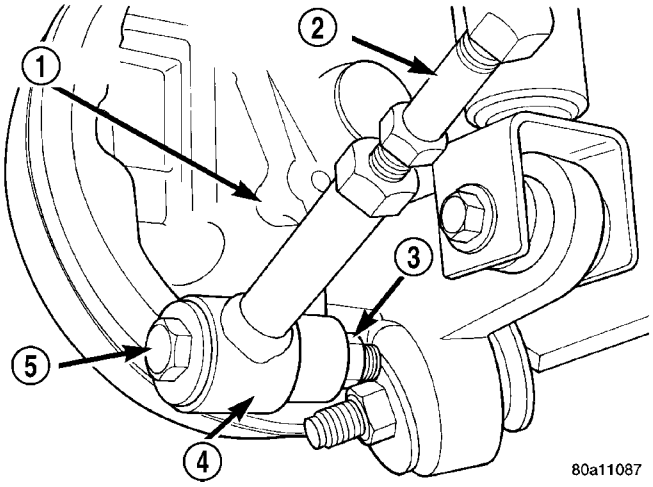

Fig. 13 Rear Lateral Link Attachment To Knuckle

1 - KNUCKLE
2 - ADJUSTING SCREW
3 - NUT
4 - REAR LATERAL LINK
5 - BOLT

(4) Remove the bolt (Fig. 14) and nut attaching the lateral link to the rear suspension crossmember.

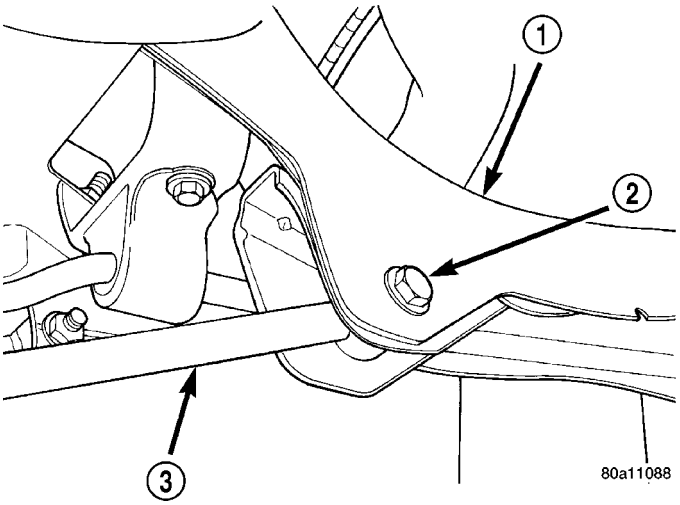

Fig. 14 Lateral Link Attachment To Rear Suspension Crossmember

1 - REAR SUSPENSION CROSSMEMBER
2 - BOLT
3 - REAR LATERAL LINK

(5) Remove rear lateral link from vehicle.

INSTALLATION

CAUTION: Do not attempt to straighten or repair a lateral link. Do not apply heat to the lateral link adjusting screws or to the jam nuts, when loosening or adjusting the lateral links.

FORWARD LATERAL LINK

(1) Install the lateral link and the attaching nut and bolt at rear suspension crossmember (Fig. 12). **The forward lateral link is to be installed with the cup in cast portion facing down and toward rear knuckle (Fig. 11).**

(2) Install the lateral link and attaching nut, bolt and washer at rear knuckle (Fig. 11).

(3) Torque both lateral link attaching bolts to 108 N·m (80 ft. lbs.).

(4) Install the rear stabilizer bar attaching link, isolator bushings and attaching nut on the forward lateral link (Fig. 11). Tighten the attaching nut to a torque of 35 N·m (26 ft. lbs.).

(5) Install wheel and tire assembly on vehicle. Progressively tighten the wheel mounting nuts in criss-cross sequence until all nuts are torqued to half specification. Then repeat the tightening sequence to the full specified torque of 135 N·m (100 ft. lbs.).

(6) Lower vehicle to the ground.

(7) Check and reset rear wheel Camber and Toe to specifications if required. (Refer to 2 - SUSPENSION/WHEEL ALIGNMENT - STANDARD PROCEDURE).

REAR LATERAL LINK

(1) Install the lateral link and the attaching nut and bolt at rear suspension crossmember (Fig. 14). **The rear lateral link is to be installed with the adjusting screw toward rear suspension crossmember, not rear knuckle.**

(2) Install the lateral link and the attaching nut, bolt and washer at rear knuckle (Fig. 13).

(3) Torque both lateral link attaching bolts to 108 N·m (80 ft. lbs.).

(4) Install wheel and tire assembly on vehicle. Progressively tighten the wheel mounting nuts in criss-cross sequence until all nuts are torqued to half specification. Then repeat the tightening sequence to the full specified torque of 135 N·m (100 ft. lbs.).

(5) Lower vehicle.

(6) Check and reset rear wheel Camber and Toe to specifications if required. (Refer to 2 - SUSPENSION/WHEEL ALIGNMENT - STANDARD PROCEDURE).

SHOCK ASSEMBLY

DESCRIPTION - SHOCK ASSEMBLY

The rear shock absorber assemblies support the weight of the vehicle using coil springs positioned around the shock absorbers. The coil springs are contained between the upper mount of the shock absorber and a lower spring seat on the body of the shock absorber.

The top of each shock absorber assembly is bolted to the top of the inner fender through a microcellular urethane isolated mount.

The bottom of the shock absorber assembly attaches to the rear knuckle using a thru-bolt.

The rear coil springs are rated separately for each corner or side of the vehicle depending on optional equipment and type of vehicle service. Coil springs come in a various rates; be sure the correct spring is in use.

The components of the shock assembly listed below are serviceable:

- Shock rod nut
- Shock mount
- Shock rod bushings
- Upper spring isolator
- Dust shield
- Cup
- Jounce bumper
- Lower spring isolator
- Coil spring
- Strut

OPERATION - SHOCK ASSEMBLY

The shock absorber assembly cushions the ride of the vehicle, controlling vibration, jounce and rebound of the suspension.

The coil spring controls ride quality and maintains ride height.

The jounce bumper limits suspension travel and metal-to-metal contact under full jounce.

The shock absorber dampens jounce and rebound motions of the coil spring and suspension.

DIAGNOSIS AND TESTING - SHOCK ASSEMBLY

(1) Inspect for damaged or broken coil springs.

(2) Inspect for torn or damaged shock absorber dust shield.

(3) Inspect for damaged lower spring isolator.

(4) Lift dust boot and inspect shock absorber for evidence of fluid running from the upper end of fluid reservoir. (Actual leakage will be a stream of fluid running down the side and dripping off lower end of unit). A slight amount of seepage between the shock absorber rod and shock absorber rod seal is not unusual and does not affect performance of the shock absorber. Also inspect jounce bumpers for signs of damage or deterioration.

REMOVAL - SHOCK ASSEMBLY

NOTE: Access for the nuts attaching the rear shock assembly upper mount to the vehicle is through the inside of the trunk.

(1) Roll back carpeting on top of the rear shock tower to access shock mounting nuts.

(2) Remove plastic cover from the top of the shock assembly.

(3) Remove 2 nuts attaching the shock assembly upper mount/spring seat to the shock tower.

(4) Raise vehicle on jackstands or centered on a frame contact type hoist. (Refer to LUBRICATION & MAINTENANCE/HOISTING - STANDARD PROCEDURE)

(5) Remove the rear wheel and tire assembly from the vehicle.

(6) Remove two fasteners holding the splash shield to the shock assembly upper mount.

(7) Remove bolt attaching shock absorber to rear knuckle (Fig. 15).

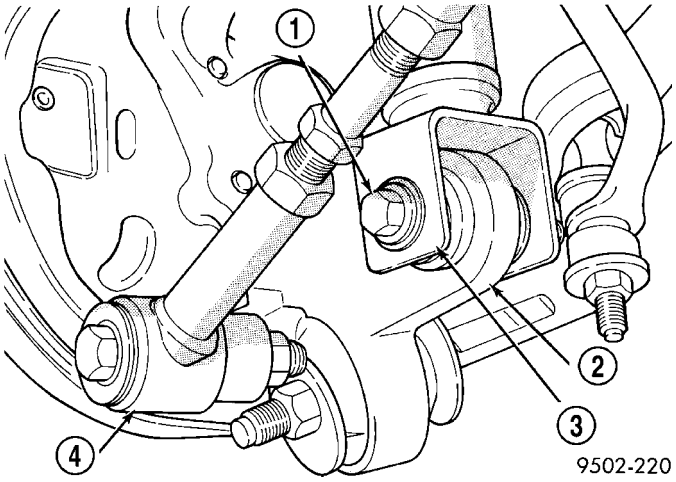

Fig. 15 Shock Absorber Attachment To Knuckle

1 - ATTACHING BOLT
2 - REAR KNUCKLE
3 - SHOCK ABSORBER CLEVIS BRACKET
4 - LATERAL LINK

(8) Remove the shock absorber from the rear knuckle first when removing the shock absorber from vehicle by pushing down on the rear suspension.

(9) Move shock assembly downward and tilt top of shock outward, then remove shock assembly from vehicle through top of wheel opening.

SHOCK ASSEMBLY (Continued)

DISASSEMBLY - SHOCK ASSEMBLY

The shock assembly must be removed from the vehicle for it to be disassembled and assembled. (Refer to 2 - SUSPENSION/REAR/SHOCK - REMOVAL)

For the disassembly and assembly of the shock assembly, use strut spring compressor Pentastar Service Equipment (PSE) tool W-7200, or the equivalent, to compress the coil spring. Follow the manufacturer's instructions closely.

WARNING: DO NOT REMOVE THE SHOCK ROD NUT BEFORE THE COIL SPRING IS COMPRESSED. THE COIL SPRING IS HELD UNDER PRESSURE AND MUST BE COMPRESSED, REMOVING SPRING TENSION FROM THE UPPER MOUNTING BRACKET BEFORE THE ROD NUT IS REMOVED.

(1) If both shocks are being serviced at the same time, mark the coil spring and shock assembly according to which side of the vehicle the shock was removed from, and which shock the coil spring was removed from.

(2) Position the shock assembly in the strut coil spring compressor following the manufacturer's instructions. Set the lower hooks and install the clamp on the lower end of the coil spring, so the shock is held in place once the shock shaft nut is removed. Lower the upper hooks and position them on the coil spring near the top.

(3) Compress the coil spring until all coil spring tension is removed from the upper mounting bracket.

(4) Hold the shock rod from rotating using special socket Snap-On® A136, or equivalent, and remove the retainer nut.

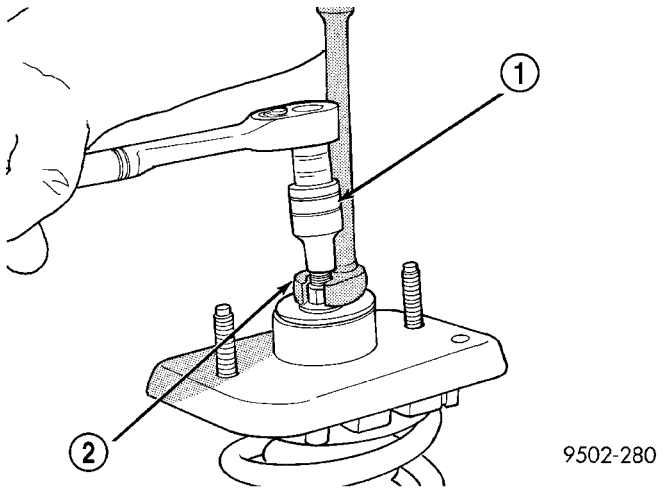

Fig. 16 Retainer Nut Removal/Installation (Typical)

1 - SHOCK ABSORBER SOCKET
2 - CROW FOOT

(5) Remove the upper shock rod bushing retainer washer from the shock rod.

(6) Remove the upper shock mount and the rod isolator bushings as an assembly from the rod of the shock absorber.

(7) Remove the upper coil spring isolator from the top of the coil spring.

(8) Remove the lower shock rod bushing washer from the top of the dust boot and shock absorber rod.

(9) Remove the dust shield and cup as an assembly from the shock absorber rod by pulling both straight up and off the shock rod.

(10) Remove the clamp from the bottom of the coil spring and remove the shock absorber, lower spring isolator, jounce bumper, and collar out through the bottom of the coil spring.

(11) Remove the jounce bumper and the collar (Fig. 17) from the rod of the shock absorber.

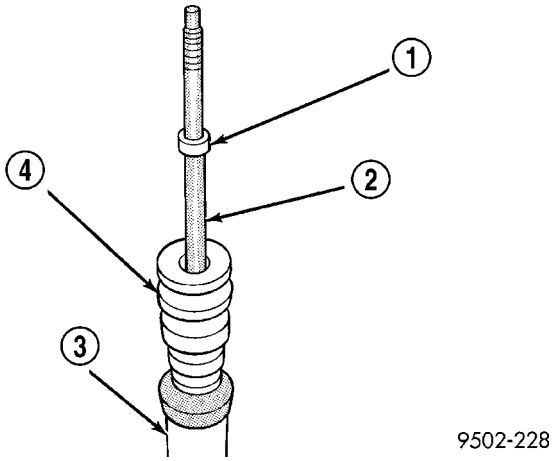

Fig. 17 Shock Absorber Jounce Bumper And Collar

1 - COLLAR
2 - SHOCK ABSORBER ROD
3 - SHOCK ABSORBER
4 - JOUNCE BUMPER

(12) Remove the lower coil spring isolator (Fig. 18) from the lower spring seat on the shock absorber.

(13) Remove the upper shock rod isolator bushing and sleeve from the upper shock mount.

(14) Remove the lower shock rod isolator bushing from the upper shock mount.

(15) Inspect the shock assembly components for the following and replace as necessary:

- Inspect the shock for any condition of rod binding over the full stroke of the shaft.
- Check the upper shock mount for cracks and distortion, and locating studs for any sign of damage.

SHOCK ASSEMBLY (Continued)

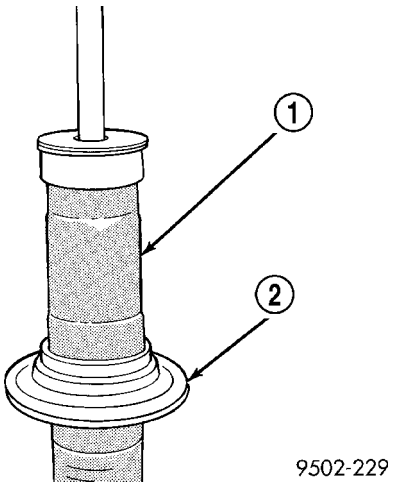

Fig. 18 Lower Coil Spring Isolator

1 - SHOCK ABSORBER
2 - COIL SPRING ISOLATOR

- Check the upper and lower shock rod isolator bushings for severe deterioration of the rubber.
- Check the upper and lower coil spring isolators for severe deterioration of the rubber.
- Inspect the dust shield for rips and deterioration.
- Inspect the jounce bumper for cracks and signs of deterioration.
- Inspect the coil spring for any sign of damage to the coating.

(16) If the coil spring needs to be serviced, release the tension from the coil spring by backing off the compressor drive fully. Push back the compressor upper hooks and remove the coil spring from the compressor.

ASSEMBLY - SHOCK ASSEMBLY

(1) If the coil spring has been removed from the compressor, place the lower end (smaller diameter) of the coil spring in the spring compressor supported by the lower hooks at the same position as in disassembly, following the manufacturer's instructions.

(2) Position the upper hooks of the spring compressor on the coil spring near the top as in disassembly.

(3) Compress the coil spring enough to reinstall the shock absorber and upper mount.

(4) Install the lower shock rod isolator bushing in the bottom of the upper shock mount. The smaller end is to be pointed away from the mount when installed.

(5) Install the upper shock rod isolator bushing and sleeve in the upper shock mount until seated into lower bushing. The smaller end of the bushing is to be pointed away from the mount when installed.

(6) Install the lower coil spring isolator on the lower spring seat of the shock absorber (Fig. 18).

(7) Install the jounce bumper as shown on the rod of the shock absorber (Fig. 19).

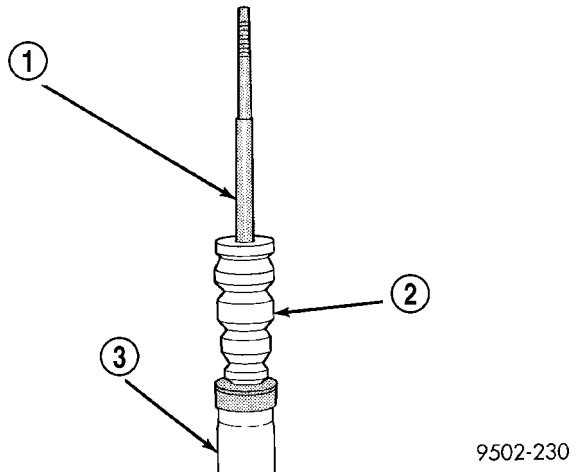

Fig. 19 Jounce Bumper Installed

1 - SHOCK ABSORBER ROD
2 - SHOCK ABSORBER JOUNCE BUMPER
3 - SHOCK ABSORBER

(8) Install the collar on the rod of the shock absorber assembly with the undercut side of sleeve facing down (Fig. 20). Push the collar down until seated on the step of the shock absorber rod.

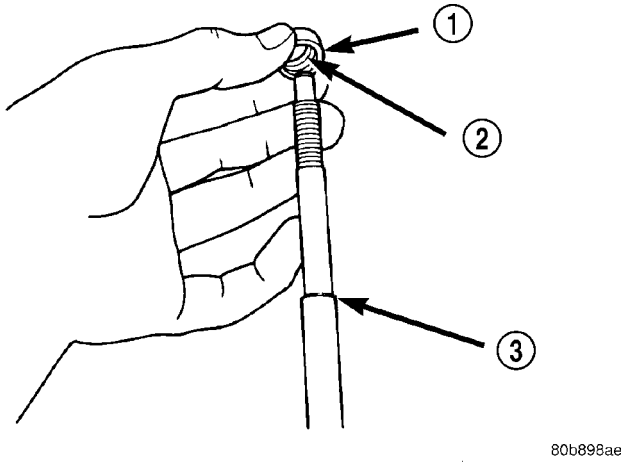

Fig. 20 Installing Collar On Shock

1 - COLLAR
2 - UNDERCUT
3 - SHOCK ABSORBER ROD STEP

SHOCK ASSEMBLY (Continued)

(9) Install the shock through the bottom of the coil spring until the lower spring seat contacts the lower end of the coil spring. Install the clamp temporarily securing the shock absorber to the coil spring.

(10) Install dust shield and cup over the jounce bumper and onto the rod of the shock absorber.

(11) Install the lower shock rod bushing retainer washer on the shock absorber rod.

(12) Install the upper spring isolator on the top of the coil spring. The bottom of the isolator is contoured to fit around the inside diameter of the coil spring and has a step built into it that the end of the coil spring must fit into upon installation.

(13) Install the upper shock mount bracket and rod isolator bushings as an assembly on the top of the rod of the shock absorber.

(14) Install the upper shock rod bushing retainer washer. Make sure the concave side is facing up.

(15) Install the shock assembly retainer nut. Hold the shock rod from rotating using special socket Snap-On® A136, or equivalent, and tighten the retainer nut using a crow foot wrench (on the end of a torque wrench and extension) to a torque of 55 N·m (40 ft. lbs.) (Fig. 16).

(16) Position the upper shock mount so it's studs are in line with the bolt hole in the shock absorber lower bracket.

(17) Slowly release the tension from the coil spring by backing off the compressor drive fully. As the tension is relieved, make sure the upper mount, isolator, and coil spring align properly. Remove the clamp from the lower end of the coil spring and shock. Push back the spring compressor upper and lower hooks, then remove the shock assembly from the spring compressor.

(18) Install shock assembly on the vehicle. (Refer to 2 - SUSPENSION/REAR/SHOCK - INSTALLATION)

INSTALLATION - SHOCK ASSEMBLY

(1) Install shock assembly back in vehicle using the reverse sequence of removal.

(2) Install upper shock mount into the mounting holes in rear shock tower.

(3) Push down on rear knuckle to obtain clearance and then install shock absorber clevis bracket on rear knuckle.

(4) Align clevis bracket on shock absorber with bushing in knuckle. Install and tighten bolt to a torque of 95 N·m (70 ft. lbs.).

(5) Lower vehicle far enough to gain access to the trunk.

(6) Install and tighten the 2 shock assembly upper mounting nuts to a torque of 54 N·m (40 ft. lbs.).

(7) Install plastic cover on shock assembly.

(8) Install carpeting back on shock tower.

(9) Install fasteners securing splash shield to shock mount.

(10) Install wheel and tire assembly on vehicle. Install all wheel mounting nuts in proper sequence until all nuts are torqued to half specification. Repeat tightening sequence to full specified torque of 135 N·m (100 ft. lbs.).

(11) Lower vehicle to the ground.

STABILIZER BAR

DESCRIPTION

The stabilizer bar interconnects the forward lateral links of the vehicle's rear suspension and is attached to the rear suspension crossmember of the vehicle.

Attachment of the stabilizer bar to the rear crossmember of the vehicle is through 2 rubber-isolator bushings and bushing retainers. The stabilizer bar to lateral link attachment is done utilizing a rubber isolated stabilizer bar attaching link. All parts of the stabilizer bar are serviceable, and the stabilizer bar to rear suspension isolator bushings are split for easy removal and installation. The split in the stabilizer bar to crossmember bushing must be positioned toward the front of the vehicle, when the stabilizer bar is installed on the vehicle.

OPERATION

Jounce and rebound movements affecting one rear wheel of the vehicle are partially transmitted to the opposite wheel of the vehicle through the stabilizer bar to stabilize body roll.

DIAGNOSIS AND TESTING - STABILIZER BAR

Inspect the stabilizer bar for damage or bending.

Inspect for broken or distorted stabilizer bar bushings, and bushing retainers. When inspecting the stabilizer bar bushings, be sure that the slit in the bushings are positioned so that it is facing toward the front of the vehicle.

Inspect the bushings and sleeves in the stabilizer bar attaching links for damage or deterioration. Inspect the stabilizer bar attaching link to ensure it is not bent or broken. If any of these conditions are present when inspecting the attaching links, replacement of the attaching link is required.

STABILIZER BAR (Continued)

REMOVAL

(1) Raise vehicle on jackstands or centered on a frame contact type hoist. (Refer to LUBRICATION & MAINTENANCE/HOISTING - STANDARD PROCEDURE).

(2) Remove both rear wheel and tire assemblies from the vehicle.

(3) From each side of the vehicle, remove the nut (Fig. 21) attaching the stabilizer bar attaching link/isolator bushings to the stabilizer bar.

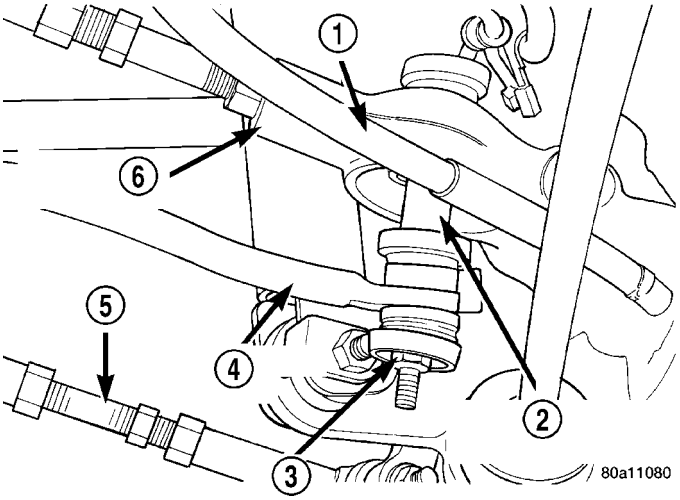

Fig. 21 Stabilizer Bar Attaching Link

1 - PARK BRAKE CABLE
2 - STABILIZER BAR ATTACHING LINK
3 - NUT
4 - STABILIZER BAR
5 - REAR LATERAL LINK
6 - FORWARD LATERAL LINK

(4) Remove the 4 bolts attaching the stabilizer bar bushing clamps to the rear suspension crossmember (Fig. 22).

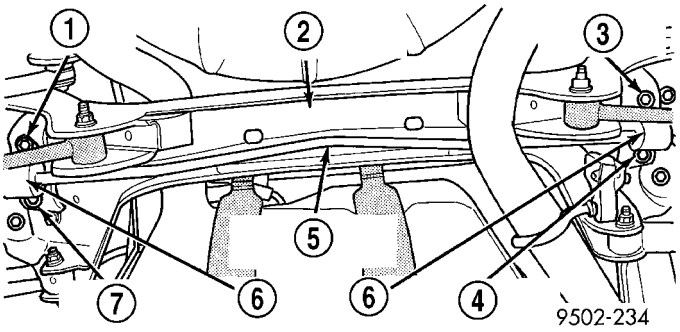

Fig. 22 Stabilizer Bar Attachment To Rear Suspension

1 - ATTACHING BOLT
2 - REAR SUSPENSION CROSSMEMBER
3 - ATTACHING BOLT
4 - ATTACHING BOLT
5 - REAR STABILIZER BAR
6 - STABILIZER BAR ATTACHING BRACKETS
7 - ATTACHING BOLT

(5) Remove the rear stabilizer bar to crossmember bushing clamps and bushings from the stabilizer bar.

(6) Remove stabilizer bar from vehicle. Stabilizer bar will come out of vehicle between the exhaust pipe and the rear suspension crossmember.

STABILIZER BAR BUSHING INSPECTION

Inspect for broken or distorted retainers and bushings. If bushing replacement is required, bushings can be removed by opening slit in bushing and removing bushing from around stabilizer bar.

INSTALLATION

(1) Install stabilizer bar back in vehicle with the bushings removed using the reverse sequence of removal.

(2) When stabilizer bar is installed in vehicle, it must be installed with the bend in the end of the stabilizer bar positioned up in vehicle when viewed from the side (Fig. 23).

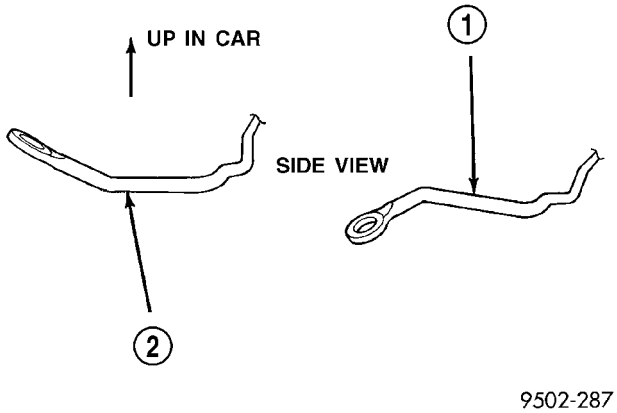

Fig. 23 Installed

1 - INCORRECTLY INSTALLED POSITION OF STABILIZER BAR
2 - CORRECTLY INSTALLED POSITION OF STABILIZER BAR

(3) Install the stabilizer bar onto the stabilizer bar to forward lateral link attaching links (Fig. 21). Install the stabilizer bar to attaching link bushings on attaching links. Tighten the bushing retaining nuts to a torque of 35 N·m (26 ft. lbs.).

(4) Loosely install the stabilizer bar bushing clamps on the rear suspension crossmember

(5) Position the stabilizer bar so it is centered in the vehicle and does not contact other suspension components or vehicle body.

(6) Tighten the bolts attaching the stabilizer bar bushing clamps to the rear crossmember to a torque of 27 N·m (19 ft. lbs.) (Fig. 22).

(7) Install wheel and tire assembly on vehicle. Tighten the wheel mounting stud nuts in proper sequence until all nuts are torqued to half specification. Then repeat the tightening sequence to the full specified torque of 135 N·m (100 ft. lbs.).

(8) Lower vehicle to the ground.

TRAILING LINK

DESCRIPTION

The trailing link on each side of the vehicle bolts to the bottom of the knuckle and to a bracket attached to the floor pan of the vehicle. The trailing link is steel and has rubber isolator bushings, retainer washers and nuts at each end to isolate suspension noise from the body of the vehicle.

OPERATION

Fore and aft movement of the knuckle is controlled by a trailing link.

DIAGNOSIS AND TESTING - TRAILING LINK

Inspect the trailing link bushings and retainers for signs of deterioration or damage. If the trailing link bushings are deteriorated or the retainers are damaged, replacement of the trailing link bushings and or the retainers will be required. The bushings and retainers are serviceable as separate components of the trailing link.

Inspect the trailing link for signs of contact with the ground or road debris which has bent or caused other damage to the trailing link. If the trailing link is bent or damaged the trailing link will require replacement. Do not ever attempt to repair or straighten a trailing link.

REMOVAL

(1) Raise vehicle on jackstands or centered on a frame contact type hoist. (Refer to LUBRICATION & MAINTENANCE/HOISTING - STANDARD PROCEDURE).

(2) Remove rear wheel and tire assembly from the vehicle.

(3) At the knuckle, remove the nut, bushing retainer and outer trailing link bushing (Fig. 24) from the trailing link.

(4) Remove the 4 bolts (Fig. 25) attaching the trailing link hanger bracket to the floor pan and frame rail.

(5) Remove the trailing link and mounting bracket as an assembly from the vehicle.

CAUTION: The installation position of the bushings and retainers on the trailing link is important. When separating the trailing link from the hanger bracket, note the position and orientation on the bushings and retainers to ensure they are re-installed correctly.

(6) Separate the trailing link from the hanger bracket. To separate trailing link from hanger bracket, use a large adjustable wrench on flat of trailing link to turn link while holding nut stationary (Fig. 26).

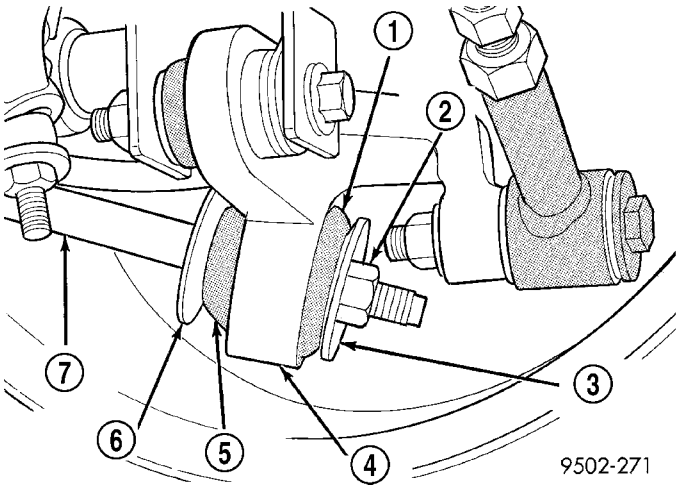

Fig. 24 Trailing Link To Knuckle Attachment

1 - BUSHING
2 - NUT
3 - BUSHING RETAINER
4 - KNUCKLE
5 - BUSHING
6 - BUSHING RETAINER
7 - TRAILING LINK

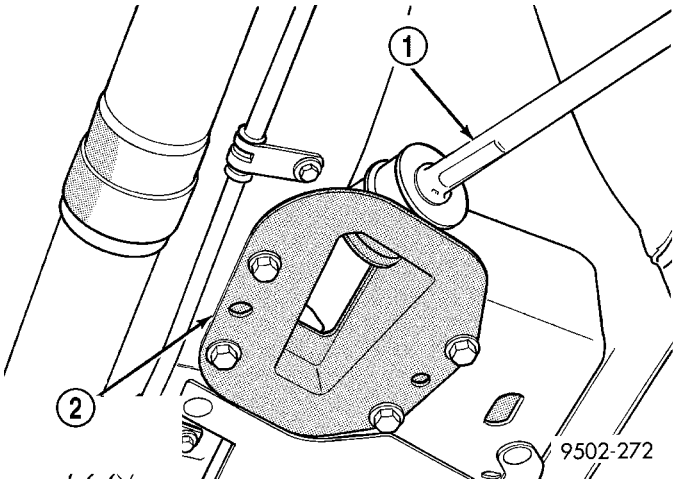

Fig. 25 Trailing Link Hanger Bracket Attachment To Vehicle

1 - TRAILING LINK
2 - TRAILING LINK HANGER BRACKET

INSTALLATION

CAUTION: The inner and outer trailing link to hanger bracket bushings and retainers must be installed in their correct position on the trailing link. Do not reverse the position of the inner and outer trailing link bushing or retainers on the trailing link.

NOTE: When installing trailing link into hanger bracket, the flat on the trailing link (Fig. 26) must be positioned at the hanger bracket.

TRAILING LINK (Continued)

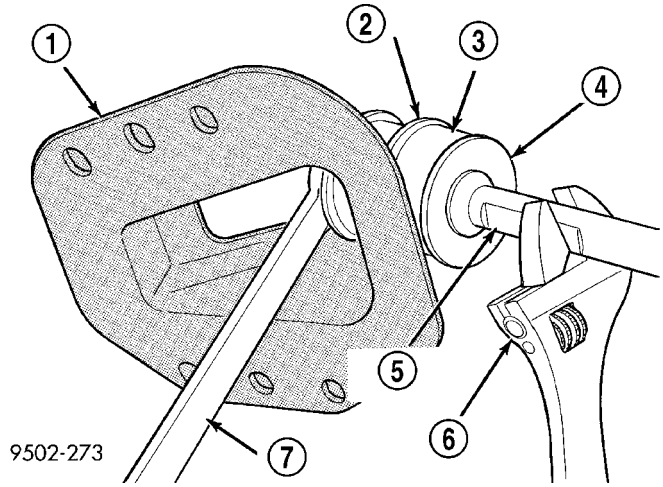

Fig. 26 Separating Trailing Link From Hanger Bracket

1 - HANGER BRACKET
2 - SPACER
3 - BUSHING
4 - RETAINER
5 - TRAILING LINK
6 - ADJUSTABLE WRENCH
7 - WRENCH

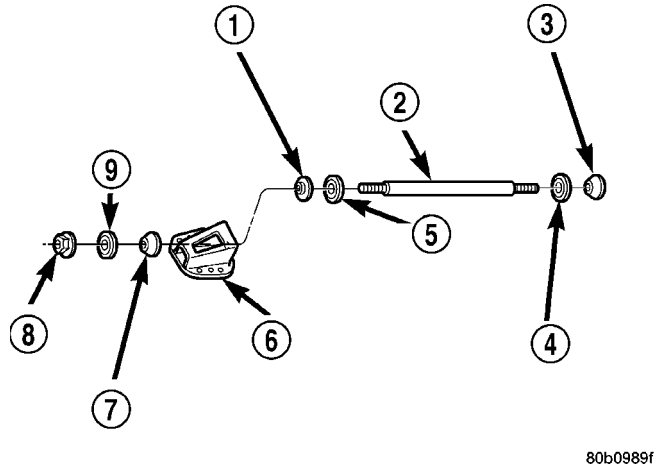

Fig. 27 Trailing Link Bushing Installation

1 - INNER TRAILING LINK BUSHING
2 - TRAILING LINK
3 - INNER TRAILING LINK BUSHING
4 - TRAILING LINK INNER BUSHING RETAINER (BLACK)
5 - INNER BUSHING RETAINER (BLACK)
6 - TRAILING LINK HANGER BRACKET
7 - OUTER TRAILING LINK BUSHING
8 - NUT
9 - OUTER BUSHING RETAINER (GOLD)

(1) Install the (black) inner bushing retainer, and inner bushing (Fig. 27) on the trailing link. Install the trailing link, retainer and bushing on the hanger bracket (Fig. 27). Then install the outer bushing, (gold) outer bushing retainer and nut (Fig. 27) on the trailing link. Using a large adjustable wrench on flat of trailing link to keep it from rotating, tighten the trailing link retaining nut to a torque of 99 N·m (73 ft. lbs.).

(2) Install the (black) inner bushing retainer, and inner bushing (Fig. 27) on the trailing link.

(3) Install knuckle end of trailing link in rear knuckle.

CAUTION: It is important that the following procedure be done when installing the trailing arm hanger bracket to the body of the vehicle. This procedure will ensure that the hanger bracket is installed in the correct position on the vehicle.

(4) Install trailing link hanger bracket on vehicle and loosely install the 4 attaching bolts (Fig. 28). Then install 2 drift pins of appropriate size in positioning holes on hanger bracket and into locating holes in body (Fig. 28). With hanger bracket correctly positioned on vehicle tighten the 4 hanger bracket mounting bolts to a torque of 34 N·m (25 ft. lbs.).

CAUTION: When installing trailing link bushing retainers, the retainers must be installed with cupped side of retainer facing away from bushing and knuckle (Fig. 24).

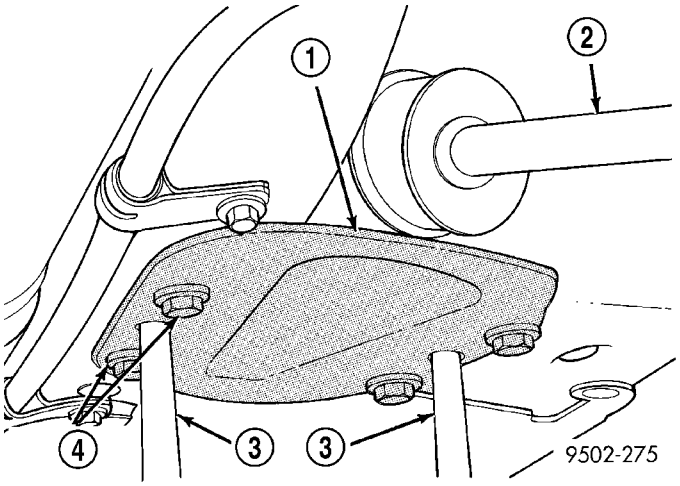

Fig. 28 Trailing Link Hanger Bracket Installation

1 - HANGER BRACKET
2 - TRAILING LINK
3 - LOCATING DRIFT PINS
4 - ATTACHING BOLTS 4

(5) At the knuckle, install the outer trailing link bushing, (gold) outer bushing retainer and retaining nut on trailing link (Fig. 24). Using a large adjustable wrench on flat of trailing link to keep it from rotating tighten the trailing link retaining nut (Fig. 24) to a torque of 99 N·m (73 ft. lbs.).

UPPER BALL JOINT

DESCRIPTION

The ball joint is pressed into the upper control arm and has a tapered stud for attachment to the steering knuckle. The ball joint stud is attached and locked into the steering knuckle using a special nut. The ball joint is a sealed-for-life type and requires no maintenance.

DIAGNOSIS AND TESTING - UPPER BALL JOINT

(1) Raise and support vehicle so that tires clear floor. (Refer to LUBRICATION & MAINTENANCE/HOISTING - STANDARD PROCEDURE)

(2) Push inward and pull outward at top of tire noting if any movement of ball joint occurs.

(3) If movement is noted, replace upper control arm.

ALTERNATE METHOD

(1) Raise and support vehicle. (Refer to LUBRICATION & MAINTENANCE/HOISTING - STANDARD PROCEDURE)

(2) Remove tire and wheel assembly. (Refer to 22 - TIRES/WHEELS - REMOVAL)

(3) Push inward and pull outward on neck of knuckle near ball joint while observing ball joint for movement. Holding a finger against knuckle and upper control arm while performing this helps to sense movement.

(4) If movement is noted, replace upper control arm.

UPPER CONTROL ARM

DESCRIPTION

An upper control arm is attached to the top of each rear knuckle, connecting the knuckle to the rear suspension crossmember.

The attachment of the upper control arm to the knuckle is achieved through a ball joint in the upper control arm. The upper control arm is bolted to the rear suspension crossmember using a pivot bar which is rubber isolated from the upper control arm.

OPERATION

The upper control arm supports the upper end of the knuckle and allows for the up and down movement of the suspension under jounce and rebound travel.

REMOVAL

NOTE: The rear control arm, control arm bushings, and pivot bar are serviced as a complete assembly on this vehicle. Do not attempt to disassemble the control arm from the pivot bar to service the rear control arm bushings.

(1) Raise vehicle. (Refer to LUBRICATION & MAINTENANCE/HOISTING - STANDARD PROCEDURE).

(2) Remove both rear wheel and tire assemblies from the vehicle.

(3) Remove the shock absorber clevis bracket to rear knuckle attaching bolt and nut (Fig. 29) on both sides of the vehicle.

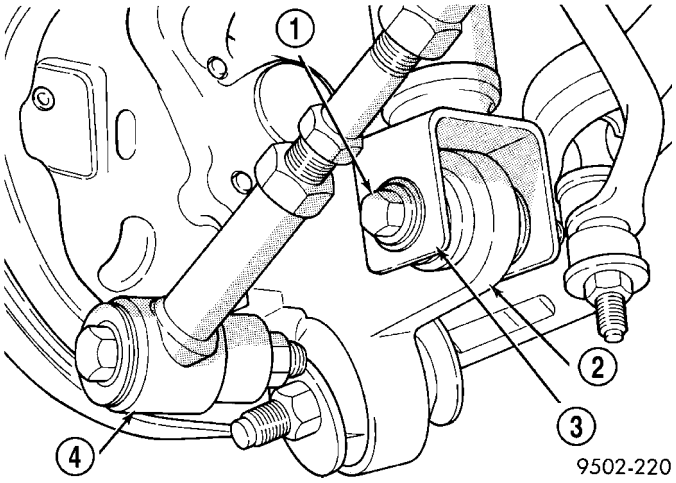

Fig. 29 Shock Absorber To Knuckle Attaching

1 - ATTACHING BOLT
2 - REAR KNUCKLE
3 - SHOCK ABSORBER CLEVIS BRACKET
4 - LATERAL LINK

(4) Remove muffler support bracket from rear frame rail (Fig. 30).

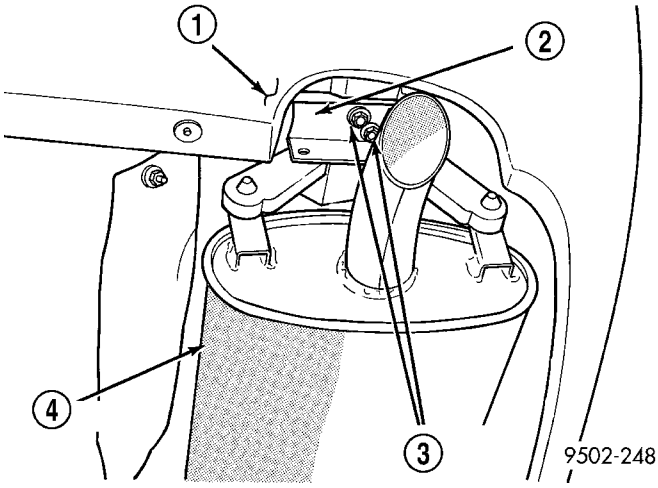

Fig. 30 Muffler Support Bracket

1 - REAR FASCIA
2 - MUFFLER SUPPORT BRACKET
3 - ATTACHING BOLTS
4 - MUFFLER

UPPER CONTROL ARM (Continued)

(5) Remove the rear exhaust pipe hanger bracket from the rear suspension crossmember (Fig. 31). Let exhaust system drop down as far as possible.

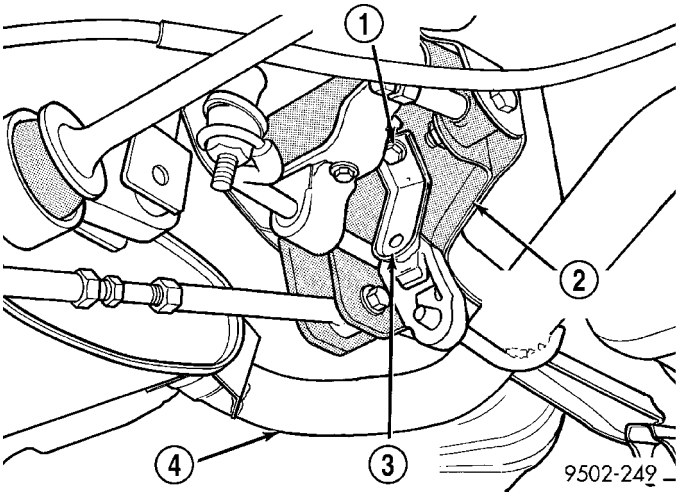

Fig. 31 Exhaust Pipe Hanger At Rear Suspension Crossmember

1 - BOLT
2 - REAR SUSPENSION CROSSMEMBER
3 - HANGER BRACKET
4 - EXHAUST PIPE

(6) If vehicle is equipped with antilock brakes, remove routing clips for wheel speed sensor cable from brackets on both upper control arms (Fig. 32).

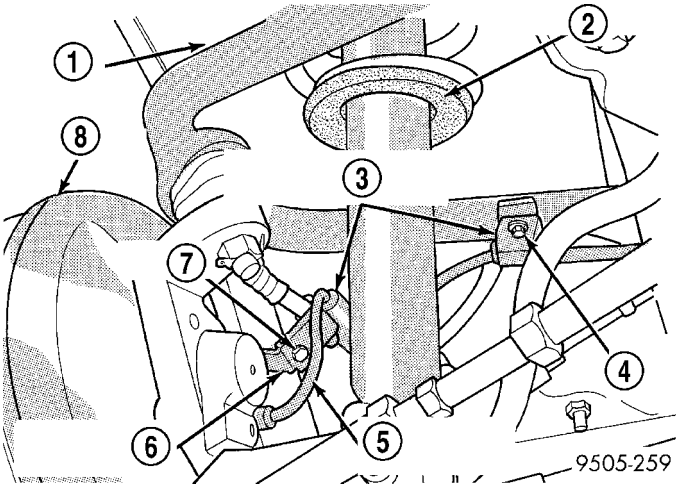

Fig. 32 Speed Sensor Cable Attachment To Control Arm

1 - UPPER CONTROL ARM
2 - SHOCK ABSORBER
3 - SPEED SENSOR CABLE ROUTING CLIPS
4 - BOLT
5 - SPEED SENSOR CABLE
6 - BRAKE FLEX HOSE BRACKET
7 - BOLT
8 - BRAKES

(7) If vehicle is equipped with antilock brakes, remove bolts and wheel speed sensor heads from both rear knuckles.

(8) Remove both rear disc brake calipers from knuckles and hang out of way using wire or cord. (Refer to 5 - BRAKES/HYDRAULIC/MECHANICAL/ BRAKE PADS/SHOES - REMOVAL). Do not allow calipers to hang by brake hoses.

(9) Release brake tubing from clips on top of cross-member.

(10) On the side of the vehicle requiring control arm removal, separate the control arm ball joint from the rear knuckle using following procedure:

(a) Back off nut retaining upper control arm ball joint to knuckle until nut is even with end of stud. This action will help avoid damaging the stud threads when the stud is released from the knuckle in the following step.

(b) Remove ball joint stud from knuckle using Puller, Special Tool, CT- 1106 (Fig. 33).

(c) Remove nut retaining upper control arm ball joint to knuckle.

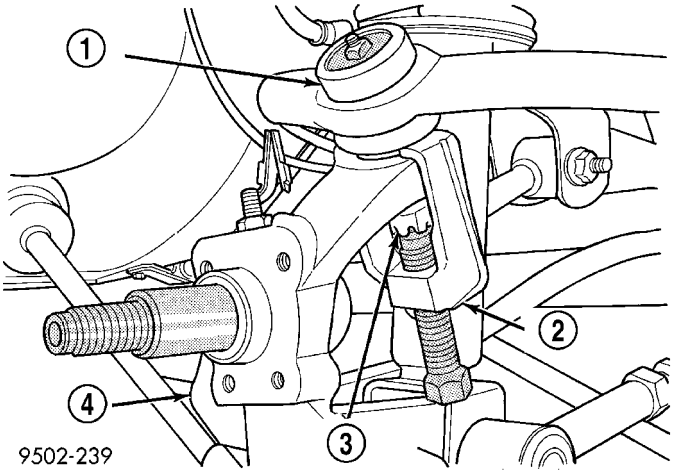

Fig. 33 Ball Joint Stud Removal From Knuckle

1 - BALL JOINT
2 - SPECIAL TOOL CT1106
3 - BALL JOINT STUD
4 - KNUCKLE

UPPER CONTROL ARM (Continued)

(11) Position a transmission jack and wooden block under the center of the rear suspension crossmember to support and lower crossmember during removal (Fig. 34).

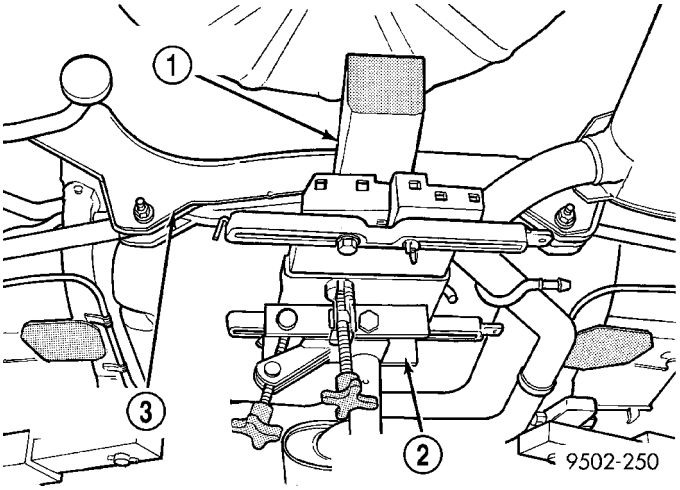

Fig. 34 Lowering And Supporting Rear Suspension Crossmember

1 - WOODEN BLOCK
2 - TRANSMISSION JACK
3 - REAR SUSPENSION CROSSMEMBER

(12) Remove the 4 bolts (Fig. 35) attaching rear suspension crossmember to rear frame rails.

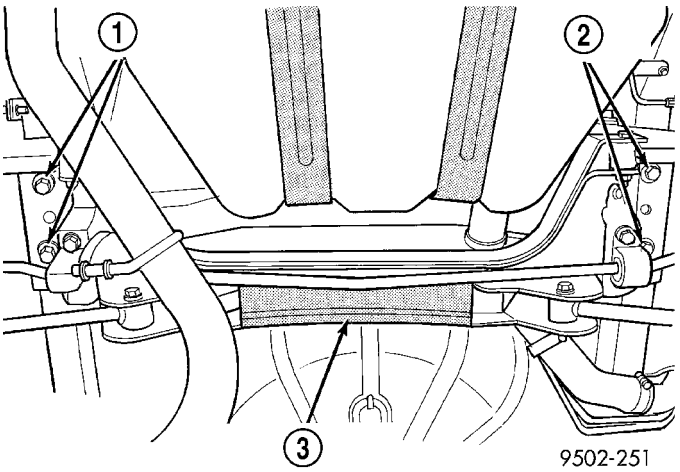

Fig. 35 Crossmember Attachment To Frame Rails

1 - ATTACHING BOLTS
2 - ATTACHING BOLTS
3 - REAR SUSPENSION CROSSMEMBER

CAUTION: When lowering rear suspension crossmember do not put a strain on the rear brake flex hoses.

(13) Lower the rear suspension crossmember far enough to access the upper control arm pivot bar to crossmember attaching bolts.

(14) Remove the 2 bolts attaching the upper control arm to the rear suspension crossmember (Fig. 36).

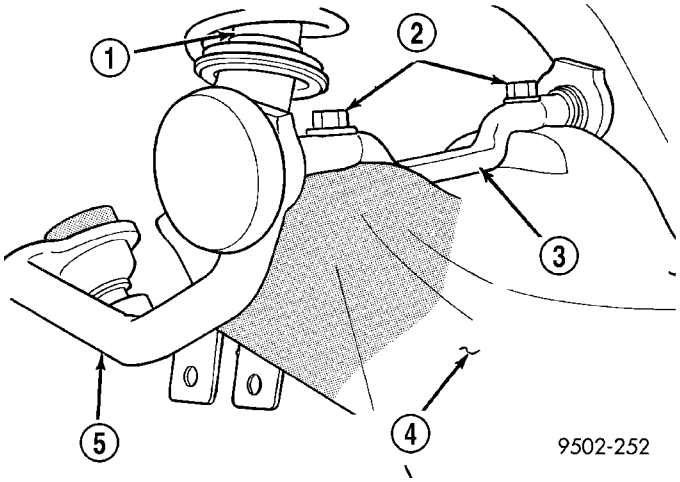

Fig. 36 Upper Control Arm Attachment To Crossmember

1 - SHOCK ABSORBER
2 - ATTACHING BOLTS
3 - UPPER CONTROL ARM PIVOT BAR
4 - REAR SUSPENSION CROSSMEMBER
5 - UPPER CONTROL ARM

(15) Remove the upper control arm from the rear suspension crossmember.

(16) Transfer any required components to the replacement control arm.

UPPER CONTROL ARM (Continued)

DISASSEMBLY - UPPER BALL JOINT

The rear upper control arm must be removed from the vehicle for replacement of the ball joint. (Refer to 2 - SUSPENSION/REAR/UPPER CONTROL ARM - REMOVAL)

(1) Position Receiving Cup, Special Tool 6758, to support control arm when removing ball joint assembly (Fig. 37). Install Remover/Installer, Special Tool 6804 on top of ball joint assembly (Fig. 37).

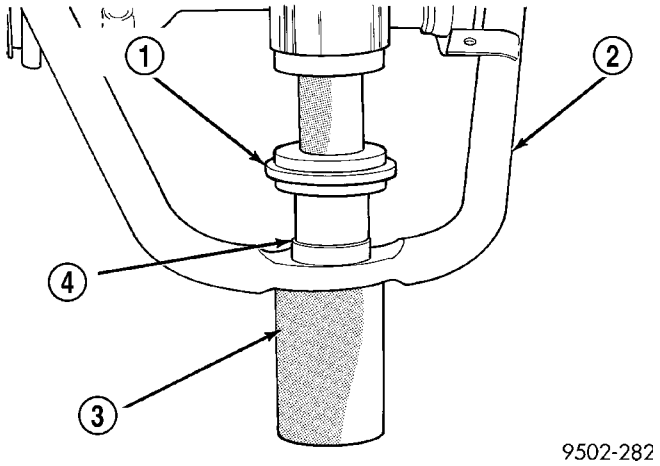

Fig. 37 Removing Ball Joint From Upper Control Arm

1 - SPECIAL TOOL 6804
2 - CONTROL ARM
3 - SPECIAL TOOL 6758
4 - BALL JOINT

(2) Using an arbor press, press the ball joint assembly out of the control arm.

INSPECTION

Inspect the control arm for physical damage. If it is determined that the upper control arm is broken or bent, the upper control arm must be replaced. The rear suspension upper control arm is not a repairable component and no attempt is to be made to repair or to straighten it. The upper control arm must be replaced if found to be damaged in any way.

Inspect the control arm pivot bushings for deterioration. If found to need replacement, the upper control arm is to be replaced.

The rear control arm, control arm bushings, and pivot bar are serviced as a complete assembly on this vehicle. Do not attempt to disassemble the control arm from the pivot bar to service the rear control arm bushings.

The only component on the upper control arm that is serviceable is the rear upper ball joint and its seal.

ASSEMBLY - UPPER BALL JOINT

(1) By hand, position ball joint assembly into ball joint bore of control arm. Be sure ball joint assembly is not cocked in the bore of the control arm. This will cause binding of the ball joint assembly when being pressed into lower control arm.

(2) Position assembly in an arbor press with Receiving Cup, Special Tool 6758, supporting lower control arm (Fig. 38). Then install Remover/Installer, Special Tool 6804, on the top of the ball joint assembly (Fig. 38).

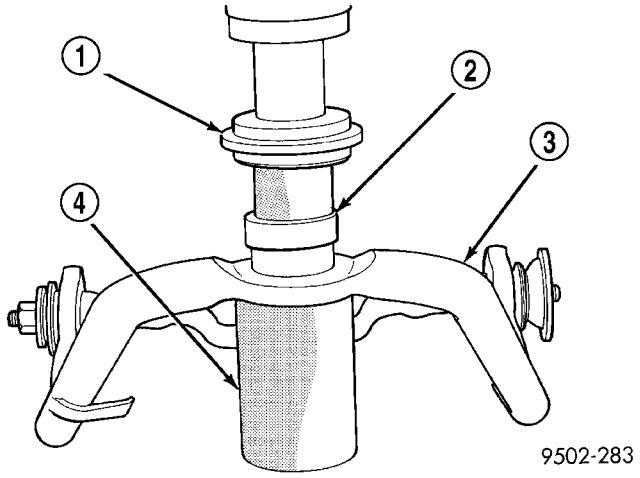

Fig. 38 Installing Ball Joint In Upper Control Arm

1 - SPECIAL TOOL 6804
2 - BALL JOINT
3 - CONTROL ARM
4 - SPECIAL TOOL 6758

CAUTION: When installing the ball joint in the upper control arm, do not press the ball joint into the control arm all the way. The lip on the ball joint must not touch the surface of the control arm. Refer to Step 3 below when installing the ball joint.

(3) Carefully align all pieces. Using the arbor press, press the ball joint into the control arm until a gap of 3 mm (1/8 inch) is between lip on ball joint and surface of lower control arm.

(4) Reinstall the control arm on the vehicle. (Refer to 2 - SUSPENSION/REAR/UPPER CONTROL ARM - INSTALLATION)

UPPER CONTROL ARM (Continued)

INSTALLATION

(1) Align the pivot bar on the upper control arm with the mounting holes in the rear suspension crossmember. Install the pivot bar attaching bolts (Fig. 36). Tighten the 2 pivot bar attaching bolts to a torque of 108 N·m (80 ft. lbs.).

(2) Using transmission jack, raise rear suspension crossmember up to the rear frame rails and loosely install the 4 attaching bolts (Fig. 35).

(3) Position an appropriate size drift into the positioning hole in each side of rear suspension crossmember and crossmember locating holes in frame rails of the vehicle (Fig. 39). This is required to properly position rear suspension crossmember to the body of the vehicle. Tighten the 4 crossmember to frame rail attaching bolts to 108 N·m (80 ft. lbs.). Remove drifts from rear suspension crossmember.

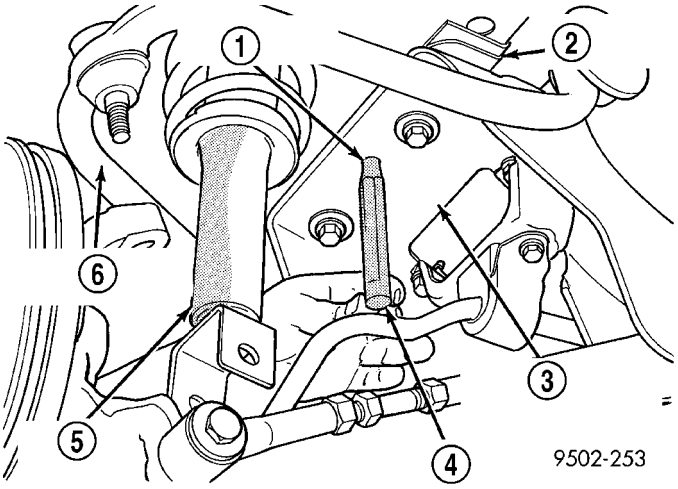

Fig. 39 Locating Rear Suspension Crossmember In Vehicle

1 - POSITIONING HOLE
2 - FRAME RAIL
3 - REAR SUSPENSION CROSSMEMBER
4 - DRIFT
5 - SHOCK ABSORBER
6 - UPPER CONTROL ARM

(4) Remove transmission jack supporting rear suspension crossmember.

(5) Install upper ball joint stud in knuckle. Install and tighten the ball joint stud nut to a torque of 27 N·m (20 ft. lbs.).

(6) Install the brake tubing above the rear suspension crossmember into the routing clips on top of the crossmember.

Install rear brake calipers onto rear knuckles. (Refer to 5 - BRAKES/HYDRAULIC/MECHANICAL/ BRAKE PADS/SHOES - INSTALLATION)

(7) If vehicle is equipped with antilock brakes, attach wheel speed sensor heads to both rear knuckles. Tighten sensor mounting bolts to a torque of 8 N·m (75 in. lbs.).

(8) If vehicle is equipped with antilock brakes, install routing clips for wheel speed sensor cables onto brackets on both upper control arms (Fig. 32). Securely tighten routing clip attaching bolts.

(9) Install muffler support bracket on rear frame rail (Fig. 30).

(10) Install rear exhaust pipe hanger on rear suspension crossmember (Fig. 31).

(11) Install the shock absorber clevis brackets on the rear knuckles (Fig. 29). Tighten the shock absorber mounting bolts to a torque of 95 N·m (70 ft. lbs.).

(12) Install wheel and tire assembly on vehicle. Progressively tighten the wheel mounting nuts in crisscross sequence until all nuts are torqued to half specification. Then repeat the tightening sequence to the full specified torque of 135 N·m (100 ft. lbs.).

(13) Lower vehicle.

(14) Check and reset if required, rear wheel Camber and Toe to preferred specifications (Refer to 2 - SUSPENSION/WHEEL ALIGNMENT - STANDARD PROCEDURE).

WHEEL ALIGNMENT

TABLE OF CONTENTS

page

WHEEL ALIGNMENT
DESCRIPTION - WHEEL ALIGNMENT 52
DIAGNOSIS AND TESTING - SUSPENSION AND STEERING 55
STANDARD PROCEDURE
STANDARD PROCEDURE - PRE-WHEEL ALIGNMENT INSPECTION 57
STANDARD PROCEDURE - CURB HEIGHT MEASUREMENT 57
STANDARD PROCEDURE - WHEEL ALIGNMENT 58
SPECIFICATIONS
WHEEL ALIGNMENT 61

WHEEL ALIGNMENT

DESCRIPTION - WHEEL ALIGNMENT

Vehicle wheel alignment is the positioning of all interrelated front and rear suspension angles. These angles affect the handling and steering of the vehicle when it is in motion. Proper wheel alignment is essential for efficient steering, good directional stability, and proper tire wear.

The method of checking a vehicle's front and rear wheel alignment varies depending on the manufacturer and type of equipment used. The manufacturer's instructions should always be followed to ensure accuracy of the alignment, except when DaimlerChrysler Corporation's wheel alignment specifications differ.

On this vehicle, the suspension angles that can be adjusted are as follows:

Front
- Camber (using special procedure)
- Toe

Rear
- Camber
- Toe

Check the wheel alignment and make all wheel alignment adjustments with the vehicle standing at its proper curb height specification. Curb height is the normal riding height of the vehicle. It is measured from a certain point on the vehicle to the ground or a designated area while the vehicle is sitting on a flat, level surface. Refer to Curb Height Measurement in this section for additional information.

Typical wheel alignment angles and measurements are described in the following paragraphs.

CAMBER

Camber is the inward or outward tilt of the top of the tire and wheel assembly (Fig. 1). Camber is measured in degrees of angle relative to a true vertical line. Camber is a tire wearing angle.

- Excessive negative camber will cause tread wear at the inside of the tire.
- Excessive positive camber will cause tread wear on the outside of the tire.

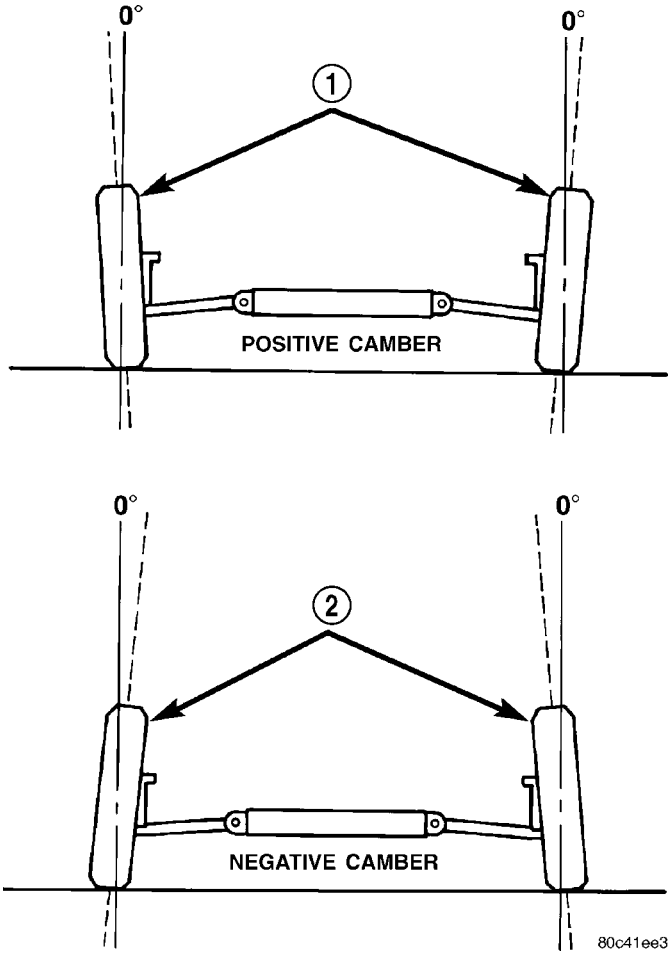

Fig. 1 Camber

1 - WHEELS TILTED OUT AT TOP
2 - WHEELS TILTED IN AT TOP

WHEEL ALIGNMENT (Continued)

CROSS CAMBER

Cross camber is the difference between left and right camber. To achieve the cross camber reading, subtract the right side camber reading from the left. For example, if the left camber is +0.3° and the right camber is 0.0°, the cross camber would be +0.3°.

CASTER

Caster is the forward or rearward tilt of the steering knuckle in reference to the position of the upper and lower ball joints. Caster is measured in degrees of angle relative to a true vertical center line. This line is viewed from the side of the tire and wheel assembly (Fig. 2).

- Forward tilt (upper ball joint ahead of lower) results in a negative caster angle.
- Rearward tilt (upper ball joint trailing lower) results in a positive caster angle.

Although caster does not affect tire wear, a caster imbalance between the two front wheels may cause the vehicle to lead to the side with the least positive caster.

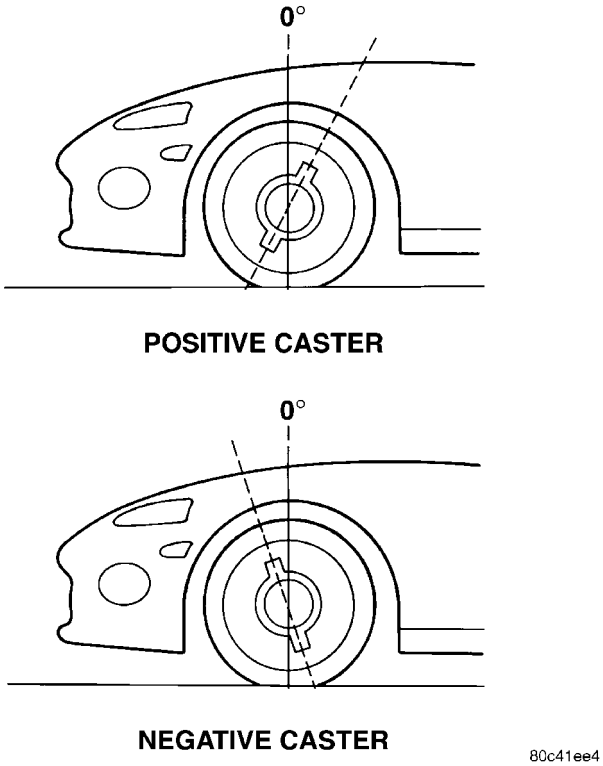

Fig. 2 Caster

CROSS CASTER

Cross caster is the difference between left and right caster.

TOE

Toe is the inward or outward angle of the wheels as viewed from above the vehicle (Fig. 3).

- Toe-in is produced when the front edges of the wheels on the same axle are closer together than the rear edges.
- Toe-out is produced when the front edges of the wheels on the same axle are farther apart than the rear edges.

Toe-in and toe-out can occur at the front wheels and the rear wheels.

Toe is measured in degrees or inches. The measurement identifies the amount that the front of the wheels point inward (toe-in) or outward (toe-out). Toe is measured at the spindle height. Zero toe means the front and rear edges of the wheels on the same axle are equally distant.

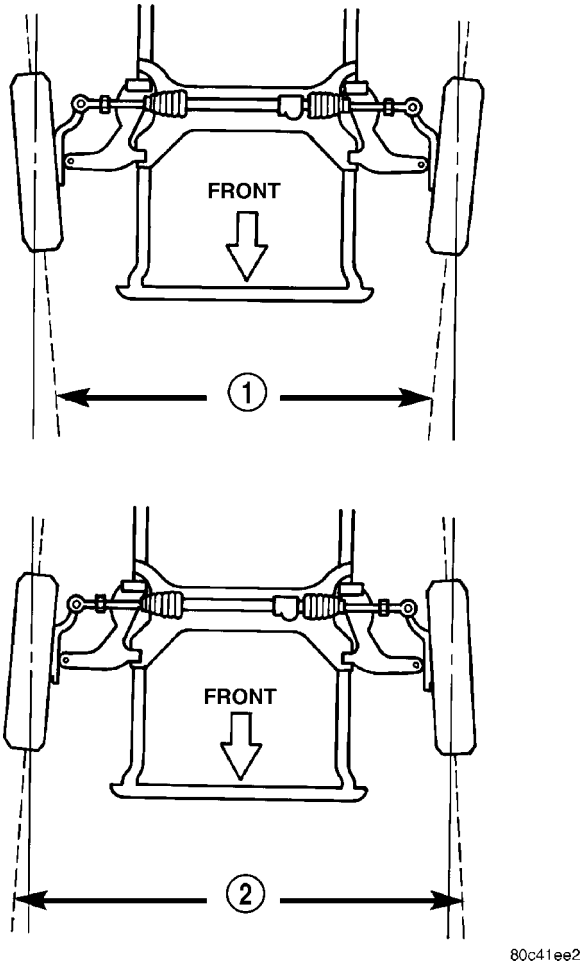

Fig. 3 Toe

1 - TOE-IN
2 - TOE-OUT

WHEEL ALIGNMENT (Continued)

TOE-OUT ON TURNS

Toe-out on turns is the relative positioning of the front wheels while steering through a turn (Fig. 4). This compensates for each front wheel's turning radius. As the vehicle encounters a turn, the outboard wheel must travel in a larger radius circle than the inboard wheel. The steering system is designed to make each wheel follow its particular radius circle. To accomplish this, the front wheels must progressively toe outward as the steering is turned from center. This eliminates tire scrubbing and undue tire wear when steering a vehicle through a turn.

Although toe-out on turns is an important angle, it is generally not necessary to check or adjust when performing a wheel alignment.

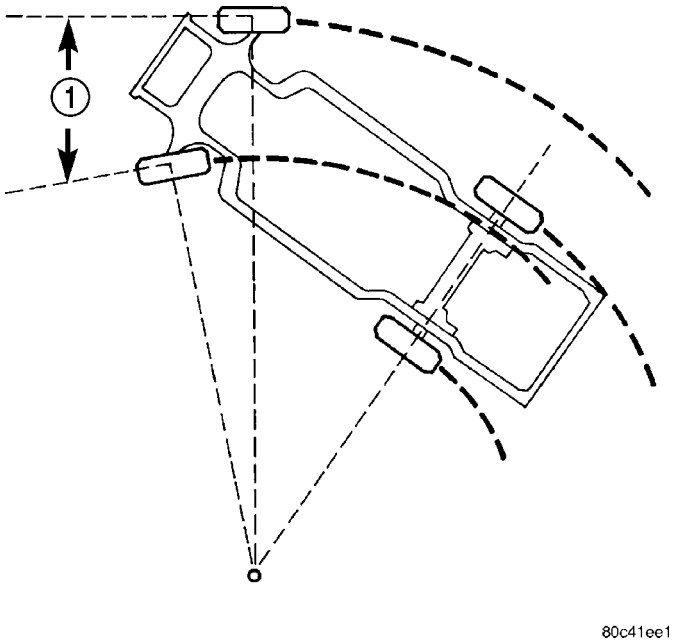

Fig. 4 Toe-Out On Turns

1 - TOE-OUT ON TURNS

DYNAMIC TOE PATTERN

Dynamic toe pattern is the inward and outward toe movement of the front and rear tires through the suspension's jounce and rebound travel. As the vehicle's suspension moves up and down, the toe pattern varies. Toe pattern is critical in controlling the directional stability of the vehicle while in motion. Front and rear dynamic toe pattern is preset by the factory at the time the vehicle is assembled.

It is not necessary to check or adjust front or rear dynamic toe pattern when doing a normal wheel alignment. The only time dynamic toe pattern needs to be checked or adjusted is if the frame of the vehicle has been damaged.

STEERING AXIS INCLINATION (S. A. I.)

Steering axis inclination is the angle between a true vertical line starting at the center of the tire at the road contact point and a line drawn through the center of the upper ball joint (or strut) and the lower ball joint (Fig. 5). S.A.I. is built into the vehicle and is not an adjustable angle. If S.A.I. is not within specifications, a bent or damaged suspension component may be the cause.

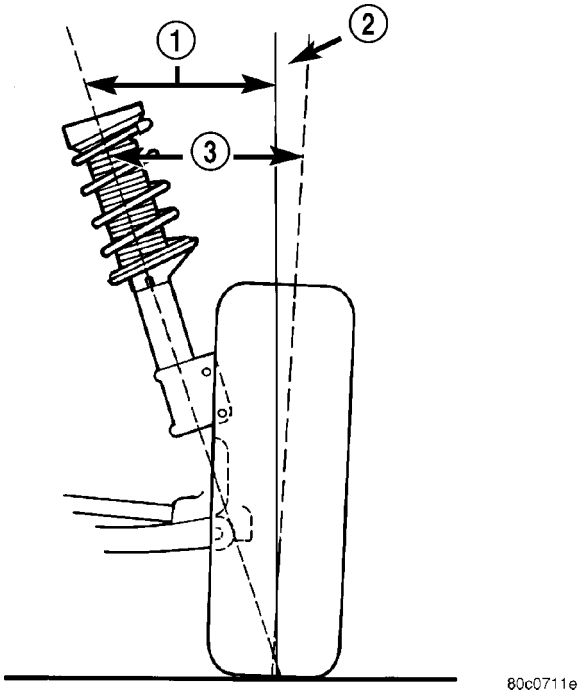

Fig. 5 S.A.I. and I.A.

1 - S.A.I.
2 - CAMBER
3 - I.A.

INCLUDED ANGLE (I. A.)

Included angle is the sum of the S.A.I. angle plus or minus the camber angle, depending on whether or not the wheel has positive or negative camber (Fig. 5). If camber is positive, add the camber angle to the S.A.I. angle. If camber is negative, subtract the camber angle from the S.A.I. angle. Included angle is not adjustable, but can be used to diagnose a frame misalignment or bent suspension component (spindle, strut).

WHEEL ALIGNMENT (Continued)

THRUST ANGLE

Thrust angle is the averaged direction the rear wheels are pointing in relation to the vehicle's center line (Fig. 6). The presence of negative or positive thrust angle causes the rear tires to track improperly to the left or right of the front tires (dog tracking).

- Negative thrust angle means the rear tires are tracking to the left of the front tires.
- Positive thrust angle means the rear tires are tracking to the right of the front tires.

Improper tracking can cause undue tire wear, a lead or pull and a crooked steering wheel. Excessive thrust angle can usually be corrected by adjusting the rear wheel toe so that each wheel has one-half of the total toe measurement.

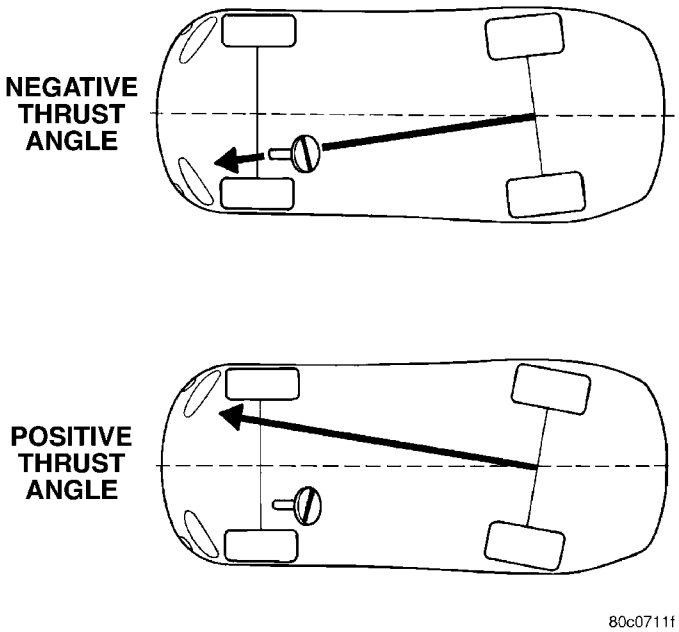

Fig. 6 Thrust Angle

DIAGNOSIS AND TESTING - SUSPENSION AND STEERING

CONDITION	POSSIBLE CAUSES	POTENTIAL CORRECTIONS
Front End Whine On Turns	1. Defective Wheel Bearing	1. Replace Wheel Bearing
	2. Incorrect Wheel Alignment	2. Check And Reset Wheel Alignment
	3. Worn Tires	3. Replace Tires
Front End Growl Or Grinding On Turns	1. Defective Wheel Bearing	1. Replace Wheel Bearing
	2. Engine Mount Grounding Against Frame Or Body Of Vehicle.	2. Check For Motor Mount Hitting Frame Rail And Reposition Engine As Required
	3. Worn Or Broken C/V Joint	3. Replace C/V Joint
	4. Loose Wheel Lug Nuts	4. Verify Wheel Lug Nut Torque
	5. Incorrect Wheel Alignment	5. Check And Reset Wheel Alignment
	6. Worn Tires	6. Replace Tires
Front End Clunk Or Snap On Turns	1. Loose Wheel Lug Nuts	1. Verify Wheel Lug Nut Torque
	2. Worn Or Broken C/V Joint	2. Replace C/V Joint
	3. Worn Or Loose Tie Rod Or Ball Joint	3. Tighten Or Replace Tie Rod End Or Ball Joint
	4. Worn Control Arm Bushing	4. Replace Control Arm Bushing
	5. Loose Sway Bar Or Upper Strut Attachment	5. Tighten Sway Bar Or Upper Strut Attachment To Specified Torque

WHEEL ALIGNMENT (Continued)

CONDITION	POSSIBLE CAUSES	POTENTIAL CORRECTIONS
Front End Whine With Vehicle Going Straight At A Constant Speed	1. Defective Wheel Bearing	1. Replace Wheel Bearing
	2. Incorrect Wheel Alignment	2. Check And Reset Wheel Alignment
	3. Worn Tires	3. Replace Tires
Front End Growl Or Grinding With Vehicle Going Straight At A Constant Speed	1. Engine Mount Grounding	1. Reposition Engine As Required
	2. Worn Or Broken C/V Joint	2. Replace C/V Joint
Front End Whine When Accelerating Or Decelerating	1. Worn Or Defective Transaxle Gears Or Bearings	1. Replace Transaxle Gears Or Bearings
Front End Clunk When Accelerating Or Decelerating	1. Worn Or Broken Engine Mount	1. Replace Engine Mount
	2. Worn Or Defective Transaxle Gears Or Bearings	2. Replace Transaxle Gears Or Bearings
	3. Loose Wheel Lug Nuts	3. Verify Wheel Lug Nut Torque
	4. Worn Or Broken C/V Joint	4. Replace C/V Joint
	5. Worn Or Loose Ball Joint	5. Tighten Or Replace Ball Joint
	6. Worn Or Loose Control Arm Bushing	6. Tighten To Specified Torque Or Replace Control Arm Bushing
	7. Loose Crossmember Bolts	7. Tighten Crossmember Bolts To Specified Torque
Road Wander	1. Incorrect Tire Pressure	1. Inflate Tires To Recommended Pressure
	2. Incorrect Front Or Rear Wheel Toe	2. Check And Reset Front Wheel Toe
	3. Worn Wheel Bearings	3. Replace Wheel Bearing
	4. Worn Control Arm Bushings	4. Replace Control Arm Bushing
	5. Excessive Friction In Steering Gear	5. Replace Steering Gear
	6. Excessive Friction In Steering Shaft Coupling	6. Replace Steering Coupler
	7. Excessive Friction In Strut Upper Bearing	7. Replace Strut Bearing
Lateral Pull	1. Unequal Tire Pressure	1. Inflate All Tires To Recommended Pressure
	2. Radial Tire Lead	2. Perform Lead Correction Procedure
	3. Incorrect Front Wheel Camber	3. Check And Reset Front Wheel Camber
	4. Power Steering Gear Imbalance	4. Replace Power Steering Gear
	5. Wheel Braking	5. Correct Braking Condition Causing Lateral Pull

WHEEL ALIGNMENT (Continued)

CONDITION	POSSIBLE CAUSES	POTENTIAL CORRECTIONS
Excessive Steering Free Play	1. Incorrect Steering Gear Adjustment	1. Adjust Or Replace Steering Gear
	2. Worn Or Loose Tie Rod Ends	2. Replace Or Tighten Tie Rod Ends
	3. Loose Steering Gear Mounting Bolts	3. Tighten Steering Gear Bolts To The Specified Torque
	4. Loose Or Worn Steering Shaft Coupler	4. Replace Steering Shaft Coupler
Excessive Steering Effort	1. Low Tire Pressure	1. Inflate All Tires To Recommended Pressure
	2. Lack Of Lubricant In Steering Gear	2. Replace Steering Gear
	3. Low Power Steering Fluid Level	3. Fill Power Steering Fluid Reservoir To Correct Level
	4. Loose Power Steering Pump Belt	4. Check and replace automatic belt tensioner as necessary. If drive belt is worn or glazed, replace belt.
	5. Lack Of Lubricant In Steering Ball Joints	5. Lubricate Or Replace Steering Ball Joints
	6. Steering Gear Malfunction	6. Replace Steering Gear
	7. Lack Of Lubricant In Steering Coupler	7. Replace Steering Coupler

STANDARD PROCEDURE

STANDARD PROCEDURE - PRE-WHEEL ALIGNMENT INSPECTION

Before any attempt is made to change or correct the wheel alignment, the following inspection and necessary corrections must be made to the vehicle to ensure proper alignment.

(1) Be sure the fuel tank is full of fuel. If the fuel tank is not full, the reduction in weight will affect the curb height of the vehicle and the alignment specifications.

(2) The passenger and luggage compartments of the vehicle should be free of any load that is not factory equipment.

(3) Check the tires on the vehicle. The tires are to be inflated to the recommended air pressure. All tires must be the same size and in good condition with approximately the same tread wear.

(4) Check the front tire and wheel assemblies for excessive radial runout.

(5) Inspect all suspension component fasteners for looseness and torque.

(6) Inspect the ball joints and all steering linkage for looseness and any sign of wear or damage.

(7) Inspect the rubber bushings on all the suspension components for signs of wear or deterioration. If any bushings show signs of wear or deterioration, they should be replaced prior to aligning the vehicle.

(8) Check vehicle curb height to verify it is within specifications. (Refer to 2 - SUSPENSION/WHEEL ALIGNMENT - STANDARD PROCEDURE). If curb height is out of specifications, check for broken or sagged springs.

STANDARD PROCEDURE - CURB HEIGHT MEASUREMENT

The wheel alignment is to be checked and all alignment adjustments made with the vehicle at its required curb height specification.

Vehicle height is to be checked with the vehicle on a flat, level surface, preferably a vehicle alignment rack. The tires are to be inflated to the recommended pressure. All tires are to be the same size as standard equipment. Vehicle height is checked with the fuel tank full of fuel, and no passenger or luggage compartment load.

Vehicle height is not adjustable. If the measurement is not within specifications, inspect the vehicle for bent or weak suspension components. Compare the parts tag on the suspect coil spring(s) to the parts book and the vehicle sales code, checking for a match. Once removed from the vehicle, compare the coil spring height to a correct new or known good coil spring. The heights should vary if the suspect spring is weak.

WHEEL ALIGNMENT (Continued)

(1) Measure from the inboard edge of the wheel opening fender lip directly above the wheel center (spindle), to the floor or alignment rack surface.

(2) When measuring, maximum left-to-right differential is not to exceed 20 mm (0.79 in.).

(3) Compare the measurements to specifications listed in the following CURB HEIGHT SPECIFICATIONS chart.

CURB HEIGHT SPECIFICATIONS

VEHICLE	FRONT	REAR
ALL	705 mm ± 12 mm 27.75 in. ± 0.47 in.	710 mm ± 12 mm 28.0 in. ± 0.47 in.

STANDARD PROCEDURE - WHEEL ALIGNMENT

(1) Position the vehicle on an alignment rack.

(2) Perform the PRE-WHEEL ALIGNMENT INSPECTION. (Refer to 2 - SUSPENSION/WHEEL ALIGNMENT - STANDARD PROCEDURE).

(3) Install all required alignment equipment on the vehicle per the alignment equipment manufacturer's instructions. On this vehicle, a four-wheel alignment is recommended.

NOTE: Prior to reading the vehicle's alignment readouts, the front and rear of vehicle should be jounced. Induce jounce (rear first, then front) by grasping the center of the bumper and jouncing each end of vehicle an equal number of times. The bumper should always be released when vehicle is at the bottom of the jounce cycle.

(4) Read the vehicle's current front and rear alignment settings. Compare the vehicle's current alignment settings to the vehicle specifications for camber, caster and toe-in. (Refer to 2 - SUSPENSION/ WHEEL ALIGNMENT - SPECIFICATIONS).

NOTE: Set the rear wheel alignment first before proceeding to the front to set the front wheel alignment.

(5) If rear camber or toe is not within specifications, proceed to REAR CAMBER AND TOE below. If rear camber and toe are within specifications, but front camber and caster are not, proceed to FRONT CAMBER AND CASTER which can be found following REAR CAMBER AND TOE. If rear camber and toe, and front camber and caster are within specifications, proceed to FRONT TOE.

Rear Caster on this vehicle is not adjustable and is not shown as an alignment specification.

CAUTION: Do not attempt to adjust the vehicle's wheel alignment by heating, bending or modifying any component of the suspension.

REAR CAMBER AND TOE

Rear Camber on this vehicle is adjustable. The rear camber on this vehicle is adjusted using the adjusting screw located in the forward and rear lateral links of the vehicles rear suspension (Fig. 7).

CAUTION: When checking the rear alignment on this vehicle, the alignment rack must be equipped with rear skid plates.

(1) For either rear wheel needing alignment, loosen the adjusting screw jam nuts (Fig. 7) on both the front and the rear lateral links.

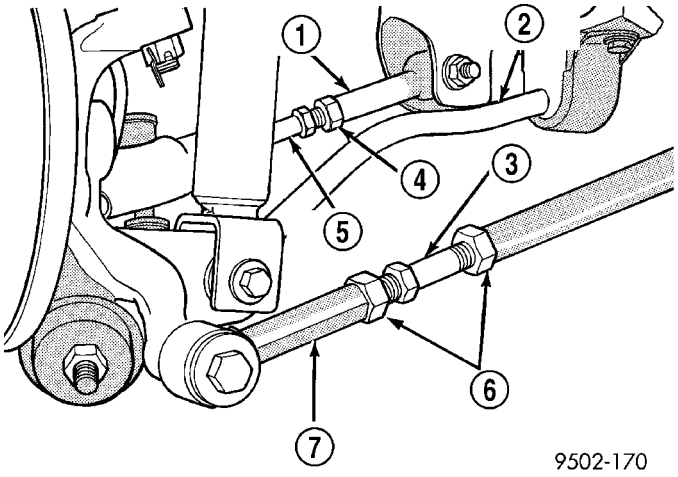

Fig. 7 Lateral Link Adjusting Screw Jam Nuts

1 - FORWARD LATERAL ARM
2 - STABILIZER BAR
3 - ADJUSTING SCREW
4 - JAM NUT
5 - ADJUSTING SCREW
6 - JAM NUTS
7 - REAR LATERAL LINK

CAUTION: Do not attempt to move the adjusting screws without properly loosening the jam nuts. Note that each adjusting screw has one right-handed nut and one left-handed nut.

WHEEL ALIGNMENT (Continued)

CAUTION: When setting rear camber and toe on the vehicle, the maximum lengths of the adjustable lateral link at the locations shown (Fig. 8) must not be exceeded. If these maximum lengths are exceeded, inadequate retention of adjustment link to the inner and outer link may result.

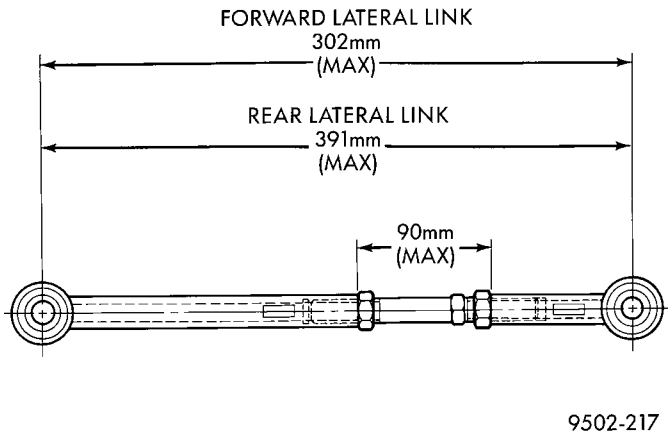

Fig. 8 Rear Lateral Link Maximum Length Dimensions

(2) Rough-in the rear camber setting as close as possible to the preferred specification by mainly adjusting the rear lateral link adjusting screw (Fig. 7). Some adjustment of the forward lateral link adjusting screw will also be required to get the rear camber setting to the preferred specification. (Refer to 2 - SUSPENSION/WHEEL ALIGNMENT - SPECIFICATIONS).

(3) Adjust the forward lateral link adjusting screw (Fig. 7)to set rear toe to the preferred specification. (Refer to 2 - SUSPENSION/WHEEL ALIGNMENT - SPECIFICATIONS).

NOTE: Adjusting toe will cause a slight change in the camber setting. If during the setting of toe, camber is no longer at the preferred specification, continue to adjust camber and toe until both are at their preferred specifications.

(4) While holding adjustment screws from turning, use a crow foot and torque wrench, and tighten all lateral link adjusting screw jam nuts to a torque of 92 N·m (68 ft. lbs.). This will securely hold the adjusting screws from turning.

(5) Proceed to FRONT CASTER AND CAMBER, or FRONT TOE if front caster and camber are within specifications.

FRONT CAMBER AND CASTER

Camber and caster settings on this vehicle are determined at the time the vehicle is designed, by the location of the vehicle's suspension components. This is referred to as NET BUILD. The result is no required adjustment of camber and caster after the vehicle is built or when servicing the suspension components. Thus, when performing a wheel alignment, caster and camber are not normally considered adjustable angles. Camber and caster should be checked to ensure they meet vehicle specifications. (Refer to 2 - SUSPENSION/WHEEL ALIGNMENT - SPECIFICATIONS).

If front camber is found not to meet alignment specifications, it can be adjusted using a procedure listed here. Before performing the camber adjustment procedure, inspect the suspension components for any signs of damage or bending.

CAMBER ADJUSTMENT PROCEDURE

(1) Open the hood and mark the position of all four shock assembly mounting bolts on the shock tower (Fig. 9) on the side of the vehicle requiring front camber adjustment.

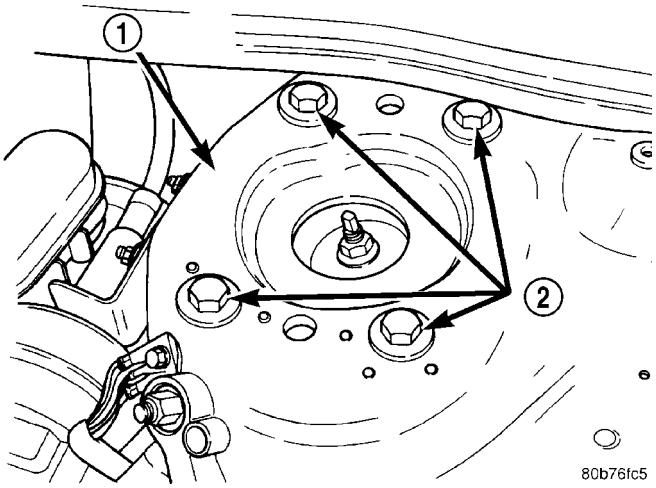

Fig. 9 Shock Assembly Mounting Bolts

1 - SHOCK TOWER
2 - MOUNTING BOLTS

(2) Raise the vehicle by the frame until the tires and front suspension are not supporting the weight of the vehicle.

(3) Loosen the shock assembly mounting bolts on the side marked in step 1. Loosen the bolts enough to allow adequate space for removal of the plastic locating pins that align the upper mounting bracket with the shock tower.

(4) Remove and discard both plastic locating pins from the shock assembly upper mounting bracket using a punch or pliers.

NOTE: Do not leave the plastic locating pins in the cavity of the shock tower or mount. Objectionable noise may result.

WHEEL ALIGNMENT (Continued)

(5) Position the shock assembly inboard or outboard as required to adjust the camber. Make sure the fore and aft position is in the same as indicated by the marks made prior to adjustment, and also the forward and rearward bolts are moved equal amounts inward or outward.

NOTE: Do not attempt to enlarge any existing holes to increase adjustment range.

(6) Torque the upper shock assembly mounting bolts to 90 N·m (68 ft. lbs.)

(7) Lower the vehicle. Jounce the front and rear of vehicle an equal amount of times.

(8) Check and adjust the front camber as necessary. (Refer to 2 - SUSPENSION/WHEEL ALIGNMENT - SPECIFICATIONS).

(9) If toe readings obtained are not within the required specification range, adjust toe to meet the preferred specification setting. Toe is adjustable using the following procedure.

FRONT TOE

(1) Center the steering wheel and lock in place using a steering wheel clamp.

CAUTION: Do not twist front inner tie rod to steering gear rubber boots during front wheel Toe adjustment.

(2) Loosen front inner to outer tie rod end jam nuts (Fig. 10). Grasp inner tie rods at serrations and rotate inner tie rods of steering gear to set front toe to the preferred toe specification. (Refer to 2 - SUSPENSION/WHEEL ALIGNMENT - SPECIFICATIONS).

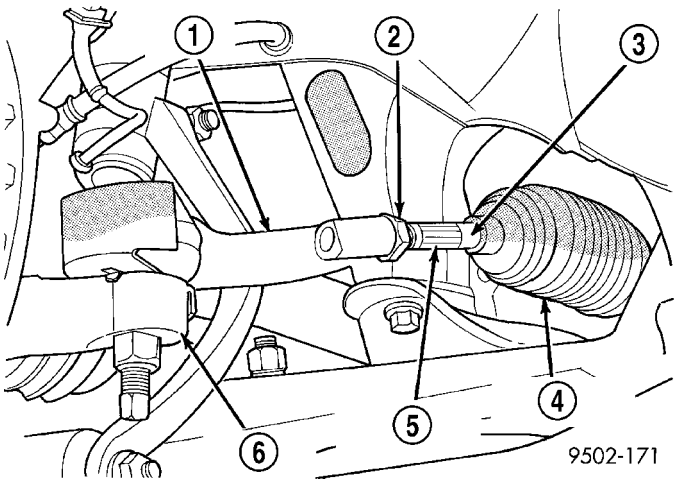

Fig. 10 Front Wheel Toe Adjustment

1 - OUTER TIE ROD
2 - JAM NUT
3 - INNER TIE ROD
4 - STEERING GEAR BOOTS
5 - ADJUSTMENT SERRATIONS
6 - STEERING KNUCKLE

(3) Tighten tie rod jam nuts (Fig. 10) to 61 N·m (45 ft. lbs.) torque.

(4) Adjust steering gear to tie rod boots at the inner tie rod.

(5) Remove steering wheel clamp.

(6) Remove the alignment equipment.

(7) Road test the vehicle to verify the steering wheel is straight and the vehicle does not wander or pull.

WHEEL ALIGNMENT (Continued)

SPECIFICATIONS

WHEEL ALIGNMENT

NOTE: All specifications are given in degrees.

NOTE: All wheel alignments are to be set with the vehicle at its proper curb height. (Refer to 2 - SUSPENSION/WHEEL ALIGNMENT - STANDARD PROCEDURE).

FRONT WHEEL ALIGNMENT	PREFERRED SETTING	ACCEPTABLE RANGE
CAMBER	−0.3°	−0.9° to +0.3°
Cross Camber (Maximum side-to-side difference)	0.0°	0.7°
CASTER	+3.3°	+2.3° to +4.3°
Cross Caster (Maximum side-to-side difference)	0.0°	1.0°
TOE* - RIGHT OR LEFT	+0.12°	+0.02° to +0.22°
TOTAL TOE* **	+0.24°	+0.04° to +0.44°
REAR WHEEL ALIGNMENT	**PREFERRED SETTING**	**ACCEPTABLE RANGE**
CAMBER	−0.5°	−0.9° to −0.1°
TOE* - RIGHT OR LEFT	+0.05°	−0.05° to +0.15°
TOTAL TOE* **	+0.10°	−0.10° to +0.30°
THRUST ANGLE	0.00°	−0.15 to 0.15°

*Positive (+) toe is toe-in, negative (−) toe is toe-out.
**Total toe is the arithmetic sum of the left and right wheel toe settings. Total Toe must be equally split between each front wheel to ensure the steering wheel is centered after setting Toe. Left and right toe must be equal to within 0.02 degrees.

DIFFERENTIAL & DRIVELINE

TABLE OF CONTENTS

page

HALF SHAFT 1

HALF SHAFT

TABLE OF CONTENTS

page

HALF SHAFT
DESCRIPTION 1
OPERATION 1
DIAGNOSIS AND TESTING
HALFSHAFT DIAGNOSIS 1
REMOVAL 3
INSTALLATION 6
SPECIFICATIONS - HALFSHAFT 9
SPECIAL TOOLS
HALFSHAFT 9
CV BOOT - INNER
REMOVAL 9
INSTALLATION 10
CV BOOT - OUTER
REMOVAL 14
INSTALLATION 15

HALF SHAFT

DESCRIPTION

This vehicle is equipped with an unequal length halfshaft system (Fig. 1). These halfshafts consist of two constant velocity joints connected by a solid shaft. A solid short interconnecting shaft is used on the left side. A long solid interconnecting shaft is used on the right side.

Some halfshafts use a tuned rubber damper weight. When replacing a halfshaft assembly, be sure the replacement halfshaft has the same damper weight as the original.

Both halfshaft assemblies use the same type of inner and outer joints. The inner joint of both halfshaft assemblies is a tripod joint, and the outer joint of both halfshaft assemblies is a Rzeppa joint. Both tripod joints and Rzeppa joints are true constant velocity (C/V) joint assemblies. The inner tripod joint allows for the changes in halfshaft length through the jounce and rebound travel of the front suspension.

On vehicles equipped with ABS brakes, the outer C/V joint is equipped with a tone wheel used to determine vehicle speed for ABS brake operation.

The inner tripod joint of both halfshafts is splined into the transaxle side gears. The inner tripod joints are retained in the side gears of the transaxle using a snap ring located in the stub shaft of the tripod joint. The outer C/V joint has a stub shaft that is splined into the wheel hub and retained by a steel hub nut.

OPERATION

Halfshaft assemblies are designed to transmit power from the transaxle to the front wheels, while allowing for powertrain and suspension flex.

DIAGNOSIS AND TESTING

HALFSHAFT DIAGNOSIS

VEHICLE INSPECTION

(1) Check for grease in the vicinity of the inboard tripod joint and outboard C/V joint; this is a sign of inner or outer joint seal boot or seal boot clamp damage.

(2) A light film of grease may appear on the right inner tripod joint seal boot; this is considered normal and should not require replacement of the seal boot.

HALF SHAFT (Continued)

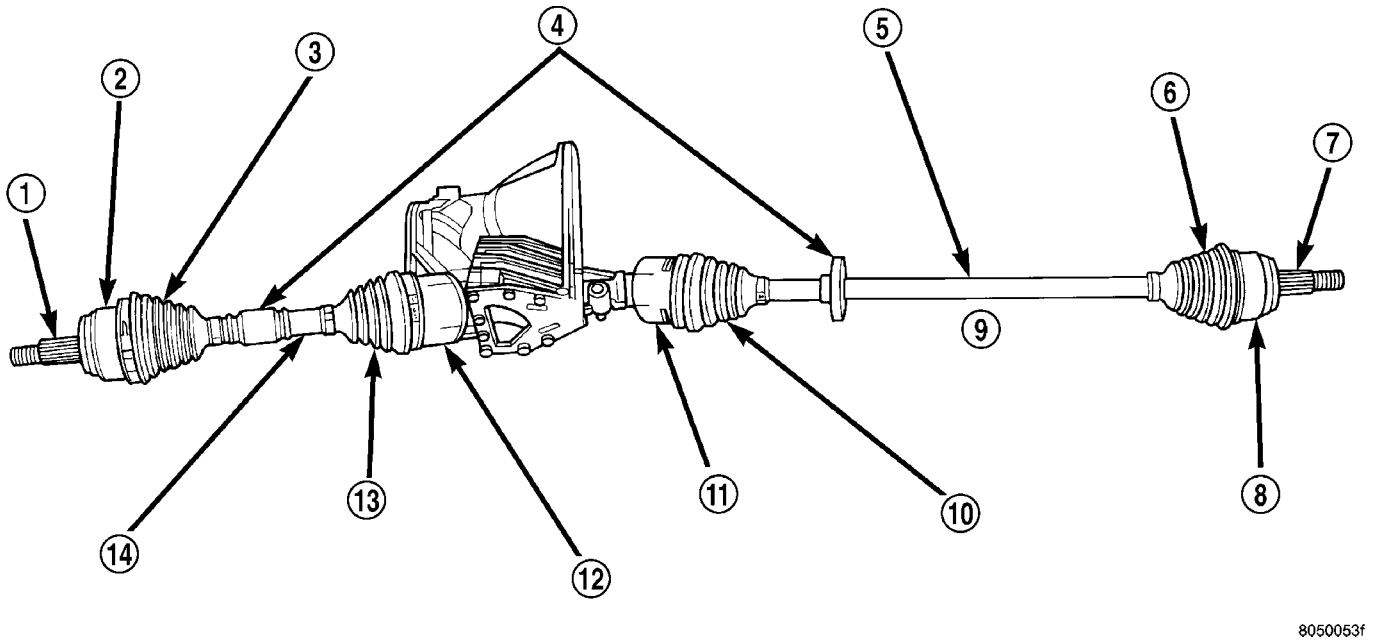

Fig. 1 Unequal Length Halfshaft System

1 - STUB AXLE
2 - OUTER C/V JOINT
3 - OUTER C/V JOINT BOOT
4 - TUNED RUBBER DAMPER WEIGHT
5 - INTERCONNECTING SHAFT
6 - OUTER C/V JOINT BOOT
7 - STUB AXLE
8 - OUTER C/V JOINT
9 - RIGHT HALFSHAFT
10 - INNER TRIPOD JOINT BOOT
11 - INNER TRIPOD JOINT
12 - INNER TRIPOD JOINT
13 - INNER TRIPOD JOINT BOOT
14 - INTERCONNECTING SHAFT-LEFT HALFSHAFT

NOISE AND/OR VIBRATION IN TURNS

A clicking noise and/or a vibration in turns could be caused by one of the following conditions:

(1) Damaged outer C/V or inner tripod joint seal boot or seal boot clamps. This will result in the loss and/or contamination of the joint grease, resulting in inadequate lubrication of the joint.

(2) Noise may also be caused by another component of the vehicle coming in contact with the halfshafts.

CLUNKING NOISE DURING ACCELERATION

This noise may be a result of one of the following conditions:

(1) A torn seal boot on the inner or outer joint of the halfshaft assembly.

(2) A loose or missing clamp on the inner or outer joint of the halfshaft assembly.

(3) A damaged or worn halfshaft C/V joint.

SHUDDER OR VIBRATION DURING ACCELERATION

This problem could be a result of:

(1) A worn or damaged halfshaft inner tripod joint.

(2) A sticking tripod joint spider assembly (inner tripod joint only).

(3) Improper wheel alignment. (Refer to 2 - SUSPENSION/WHEEL ALIGNMENT - STANDARD PROCEDURE)

VIBRATION AT HIGHWAY SPEEDS

This problem could be a result of:

(1) Foreign material (mud, etc.) packed on the backside of the wheel(s).

(2) Out of balance front tires or wheels. (Refer to 22 - TIRES/WHEELS - STANDARD PROCEDURE)

(3) Improper tire and/or wheel runout. (Refer to 22 - TIRES/WHEELS - STANDARD PROCEDURE)

HALF SHAFT (Continued)

REMOVAL

(1) Raise vehicle on hoist.
(2) Remove front tire and wheel assembly.
(3) Remove caliper adapter-to-knuckle bolts.
(4) Remove caliper/adapter assembly and support with mechanic's wire or equivalent (Fig. 2). **Do not support assembly by the flexible brake hose.**

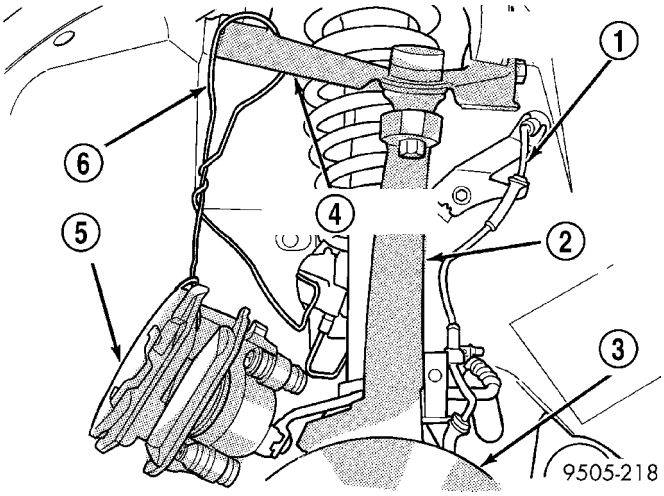

Fig. 2 Properly Supported Brake Caliper—Typical

1 - ABS SPEED SENSOR CABLE
2 - STEERING KNUCKLE
3 - ROTOR
4 - UPPER CONTROL ARM
5 - DISC BRAKE CALIPER ASSEMBLY
6 - WIRE HANGER

(5) Remove the brake rotor (Fig. 3).

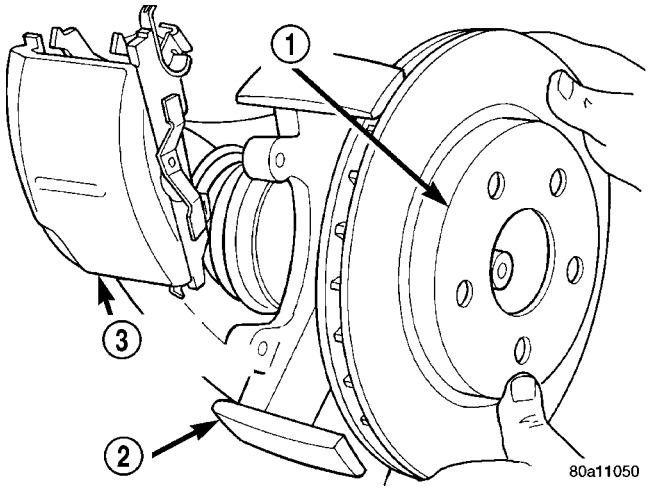

Fig. 3 Brake Rotor Removal—Typical

1 - BRAKING DISC
2 - STEERING KNUCKLE
3 - DISC BRAKE CALIPER ASSEMBLY (STORED)

(6) Remove the tie rod-to-steering knuckle nut (Fig. 4). **Remove nut from tie rod end by holding tie rod end stud with a 11/32 socket and loosen and remove nut (Fig. 4).**

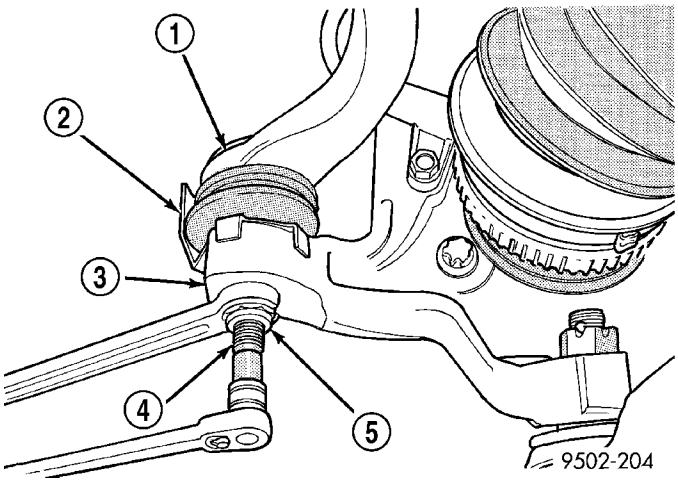

Fig. 4 Removing Tie Rod End-to-Knuckle Nut

1 - TIE ROD
2 - HEAT SHIELD
3 - STEERING KNUCKLE
4 - TIE ROD STUD
5 - NUT

(7) Separate tie rod end from steering knuckle arm, using Tool MB-991113 (Fig. 5).

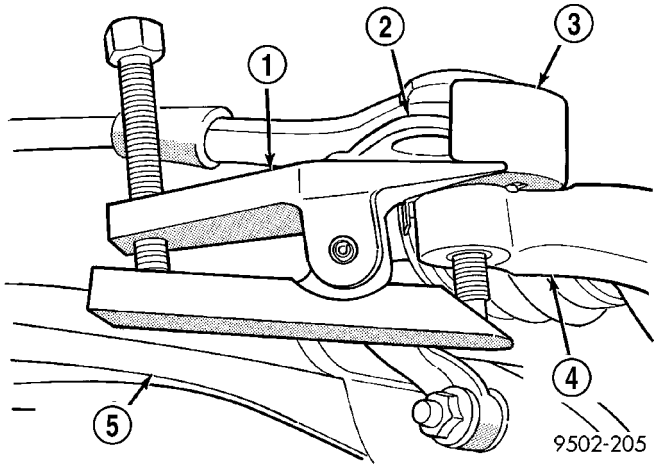

Fig. 5 Tie Rod End Removal from Steering Knuckle

1 - SPECIAL TOOL MB-991113
2 - TIE ROD END
3 - HEAT SHIELD
4 - STEERING KNUCKLE
5 - LOWER CONTROL ARM

HALF SHAFT (Continued)

(8) Remove the halfshaft-to-hub and bearing retaining nut (Fig. 6).

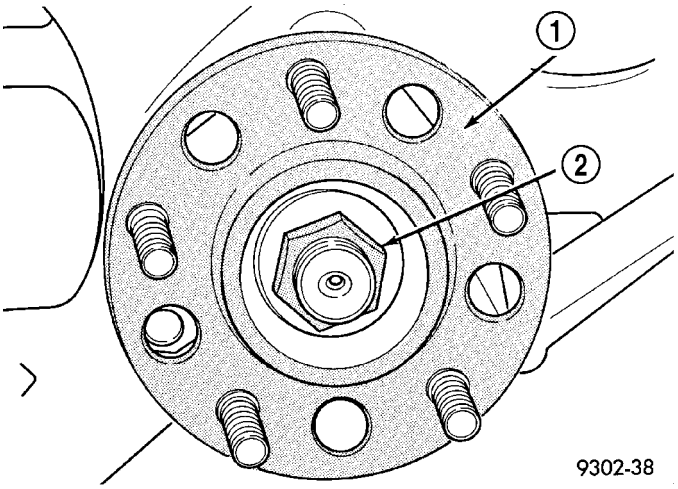

Fig. 6 Halfshaft Retaining Nut—Typical

1 - HUB/BEARING ASSEMBLY
2 - NUT

(9) Remove cotter pin and castle nut (Fig. 7) from stud of lower ball joint at the steering knuckle.

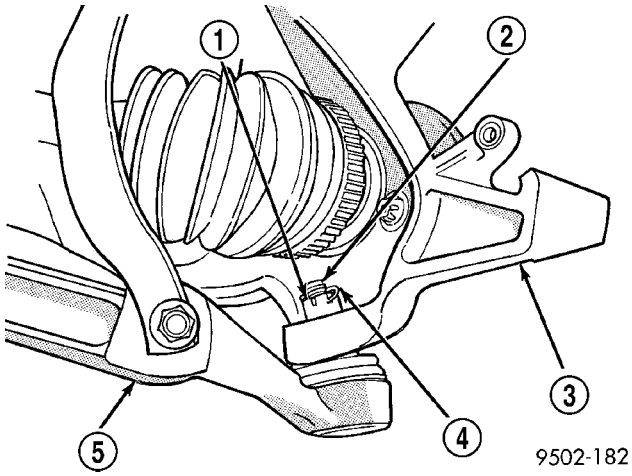

Fig. 7 Lower Ball Joint to Knuckle Attachment

1 - CASTLE NUT
2 - BALL JOINT STUD
3 - STEERING KNUCKLE
4 - COTTER PIN
5 - LOWER CONTROL ARM

CAUTION: No tool is to be inserted between the steering knuckle and the lower ball joint to separate stud of lower ball joint from the steering knuckle. The steering knuckle is to be separated from the stud of the ball joint only using the procedure as described in Step 10.

(10) Turn steering knuckle so the front of the steering knuckle is facing as far outboard in the wheel well as possible. Using a hammer strike steering knuckle boss until steering knuckle separates from stud of lower ball joint (Fig. 8). **When striking steering knuckle, care MUST be taken not to hit lower control arm or ball joint grease seal.**

NOTE: Care must be taken not to separate the inner C/V joint during this operation. Do not allow driveshaft to hang by inner C/V joint. Driveshaft must be supported.

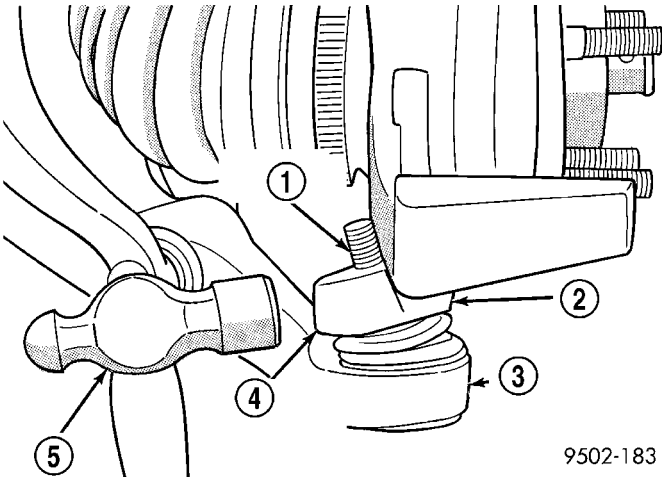

Fig. 8 Separating Ball Joint Stud from Steering Knuckle

1 - BALL JOINT STUD
2 - STEERING KNUCKLE
3 - LOWER CONTROL ARM
4 - STEERING KNUCKLE BOSS
5 - HAMMER

HALF SHAFT (Continued)

(11) Separate halfshaft from steering knuckle (Fig. 9). **If difficulty is encountered separating halfshaft from knuckle, DO NOT strike halfshaft with a hammer to break free. Install Puller 1026 (Fig. 10) as shown in to press shaft out of hub/bearing assembly.**

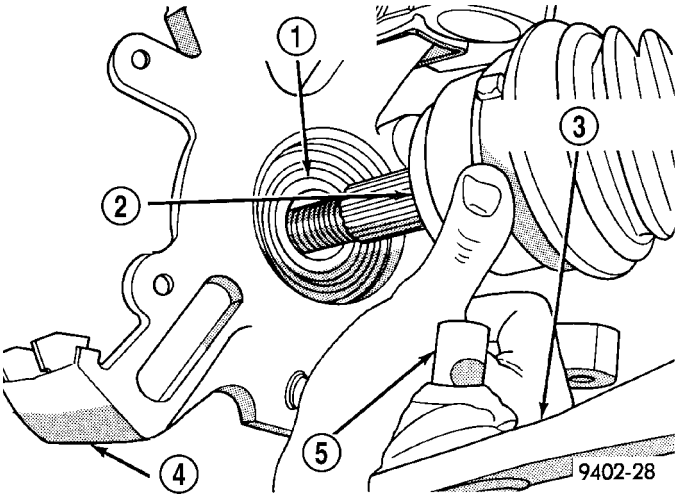

Fig. 9 Separating Halfshaft from Steering Knuckle

1 - HUB/BEARING ASSEMBLY
2 - HALFSHAFT
3 - LOWER CONTROL ARM
4 - STEERING KNUCKLE
5 - BALL JOINT

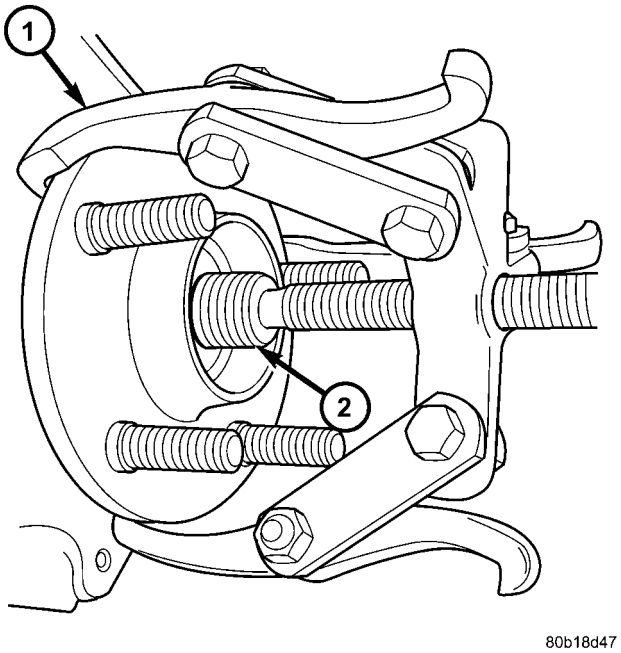

Fig. 10 Separating Halfshaft from Hub/Bearing

1 - PULLER 1026
2 - HALFSHAFT

CAUTION: When inserting pry bar between inner tripod joint and transaxle case, care must be used to ensure no damage occurs to oil seal in transaxle case.

(12) Support the outer end of the halfshaft assembly. Insert a pry bar between inner tripod joint and transaxle case (Fig. 11). Pry against inner tripod joint, until tripod joint retaining snap ring is disengaged from transaxle side gear.

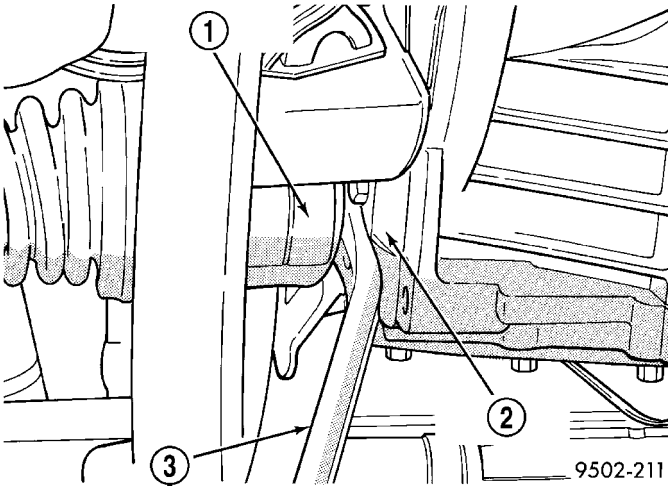

Fig. 11 Disengaging Inner Tripod Joint From Transaxle

1 - INNER TRIPOD JOINT
2 - TRANSAXLE CASE
3 - PRY BAR

HALF SHAFT (Continued)

(13) Hold inner tripod joint and interconnecting shaft of driveshaft assembly. Remove inner tripod joint from transaxle, by pulling it straight out of transaxle side gear and transaxle oil seal (Fig. 12). **When removing tripod joint, do not let spline or snap ring drag across sealing lip of the transaxle to tripod joint oil seal.**

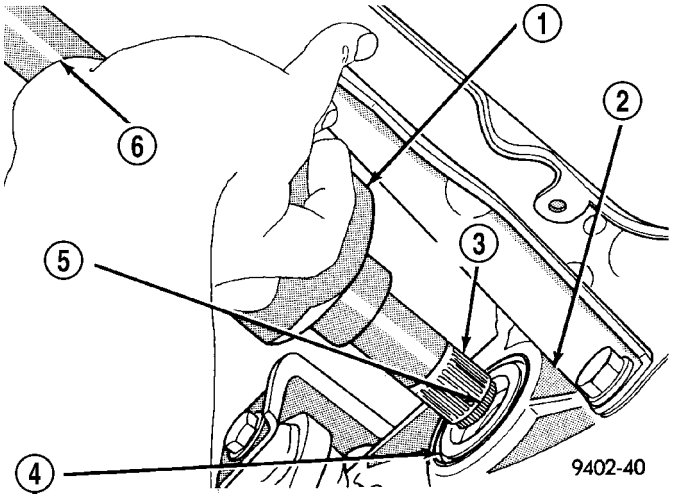

Fig. 12 Tripod Joint Removal from Transaxle

1 - INNER TRIPOD JOINT
2 - TRANSAXLE
3 - SPLINE
4 - OIL SEAL
5 - SNAP RING
6 - INTERCONNECTING SHAFT

INSTALLATION

(1) Thoroughly clean spline and oil seal sealing surface, on tripod joint. Lightly lubricate oil seal sealing surface on tripod joint with fresh clean transmission lubricant.

(2) Holding halfshaft assembly by tripod joint and interconnecting shaft, install tripod joint into transaxle side gear as far as possible by hand (Fig. 12).

(3) Grasp inner tripod joint and interconnecting shaft. Forcefully push the tripod joint into side gear of transaxle, until snap ring is engaged with transaxle side gear. **Test that snap ring is fully engaged with side gear by attempting to remove tripod joint from transaxle by hand. If snap ring is fully engaged with side gear, tripod joint will not be removable by hand.**

(4) Clean all debris and moisture out of steering knuckle, in the area were outer C/V joint will be installed into steering knuckle.

(5) Ensure that front of outer C/V joint which fits against the face of the hub and bearing is free of debris and moisture before installing outer C/V joint into hub and bearing assembly (Fig. 13).

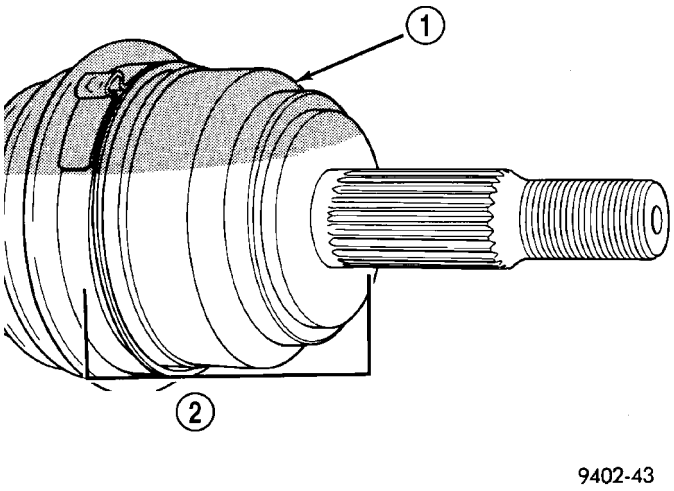

Fig. 13 Outer C/V Joint Inspection

1 - OUTER C/V JOINT
2 - THIS AREA OF OUTER C/V JOINT MUST BE FREE OF ALL DEBRIS AND MOISTURE, BEFORE INSTALLATION INTO STEERING KNUCKLE.

(6) Slide halfshaft back into front hub (Fig. 14). Then install steering knuckle onto the lower control arm ball joint stud.

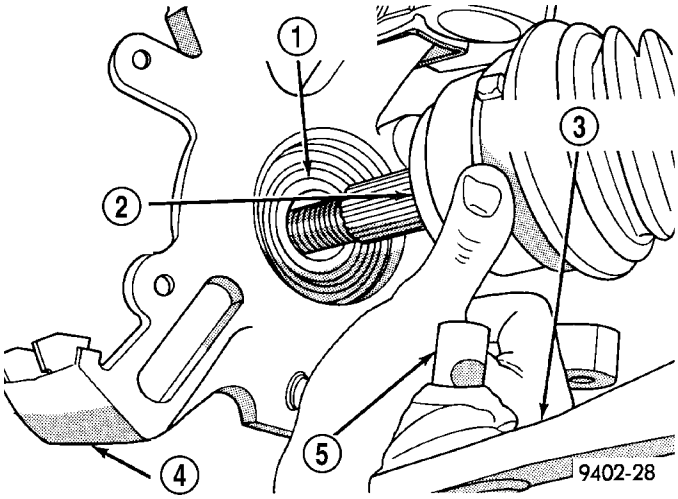

Fig. 14 Steering Knuckle Installation on Outer C/V Joint

1 - HUB/BEARING ASSEMBLY
2 - HALFSHAFT
3 - LOWER CONTROL ARM
4 - STEERING KNUCKLE
5 - BALL JOINT

HALF SHAFT (Continued)

(7) Install the steering knuckle to ball joint stud castle nut (Fig. 15). Tighten the castle nut to 95 N·m (70 ft. lbs.).

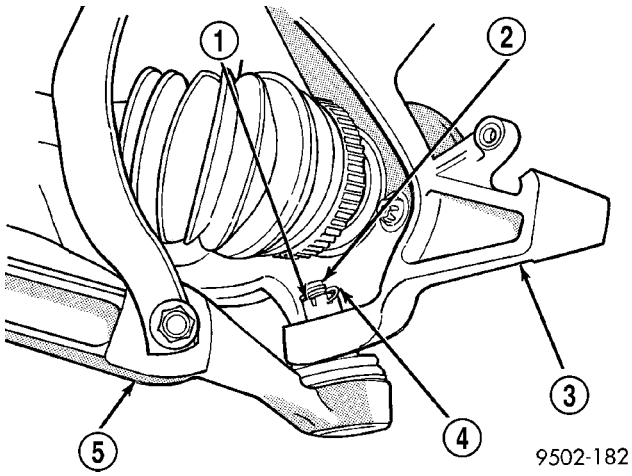

Fig. 15 Lower Ball Joint to Steering Knuckle Attachment

1 - CASTLE NUT
2 - BALL JOINT STUD
3 - STEERING KNUCKLE
4 - COTTER PIN
5 - LOWER CONTROL ARM

(8) Install tie rod end into the steering knuckle. Start tie rod end to steering knuckle nut onto stud of tie rod end. While holding stud of tie rod end stationary (Fig. 16), tighten tie rod end to steering knuckle nut. Using a crowfoot and 11/32 socket, tighten the nut to 55 N·m (41 ft. lbs.) (Fig. 17).

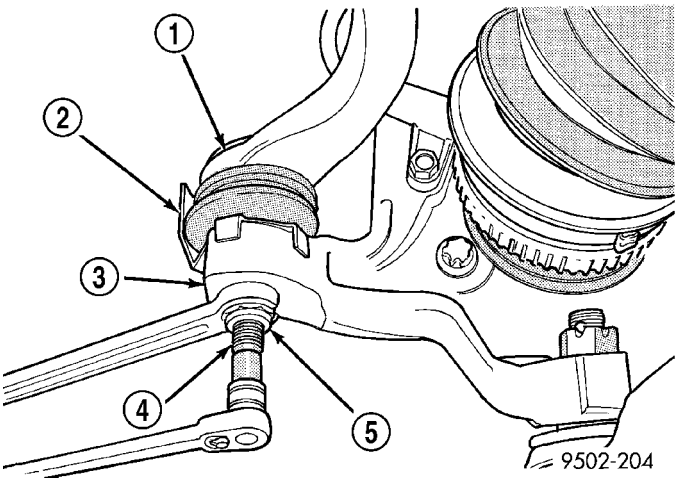

Fig. 16 Installing Tie Rod End Nut

1 - TIE ROD
2 - HEAT SHIELD
3 - STEERING KNUCKLE
4 - TIE ROD STUD
5 - NUT

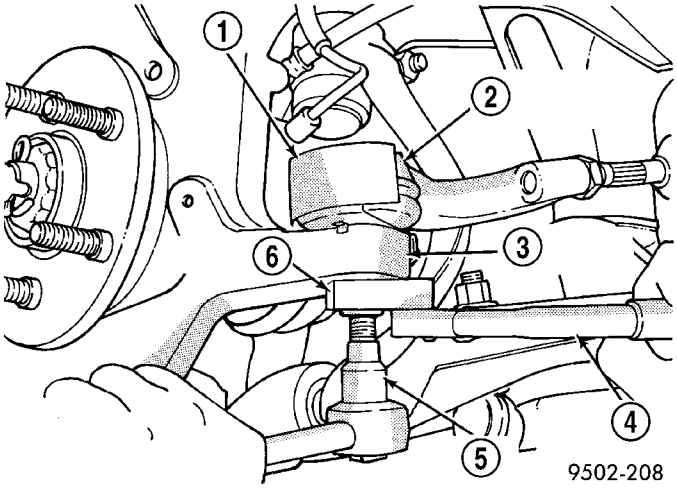

Fig. 17 Torquing Tie Rod End Nut

1 - HEAT SHIELD
2 - OUTER TIE ROD
3 - STEERING KNUCKLE
4 - TORQUE WRENCH
5 - 11/32 SOCKET
6 - CROWFOOT

(9) Install brake rotor to hub (Fig. 18).

(10) Install caliper/adapter bracket assembly on steering knuckle. Install and torque caliper adapter-to-knuckle bolts to 88 N·m (65 ft. lbs.).

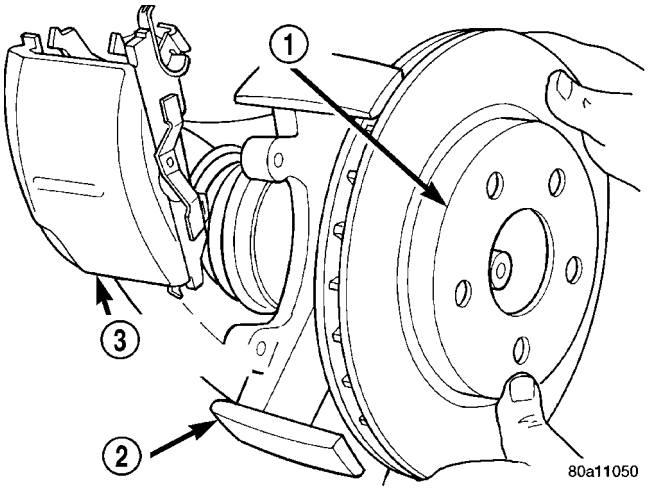

Fig. 18 Installing Disc Brake Caliper and Rotor

1 - BRAKING DISC
2 - STEERING KNUCKLE
3 - DISC BRAKE CALIPER ASSEMBLY (STORED)

HALF SHAFT (Continued)

(11) Clean all foreign matter from the threads of the outer C/V joint stub axle. Install hub nut onto threads of halfshaft (Fig. 19). With vehicle brakes applied to keep braking disc from turning, tighten hub nut to 150 N·m (110 ft. lbs.) (Fig. 20).

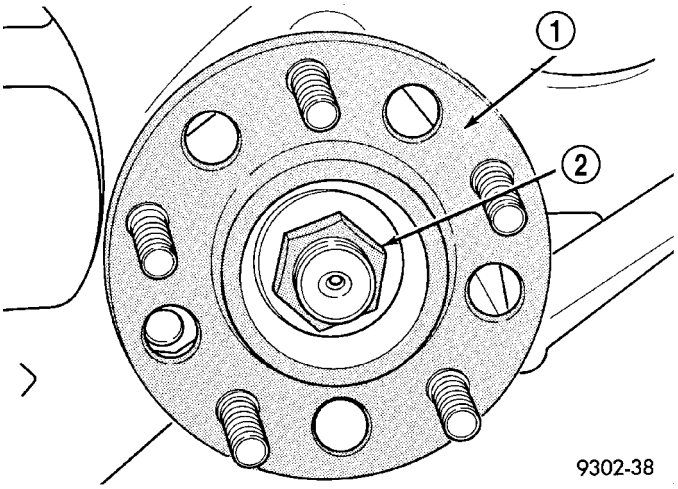

Fig. 19 Halfshaft Retaining Nut—Typical

1 - HUB/BEARING ASSEMBLY
2 - NUT

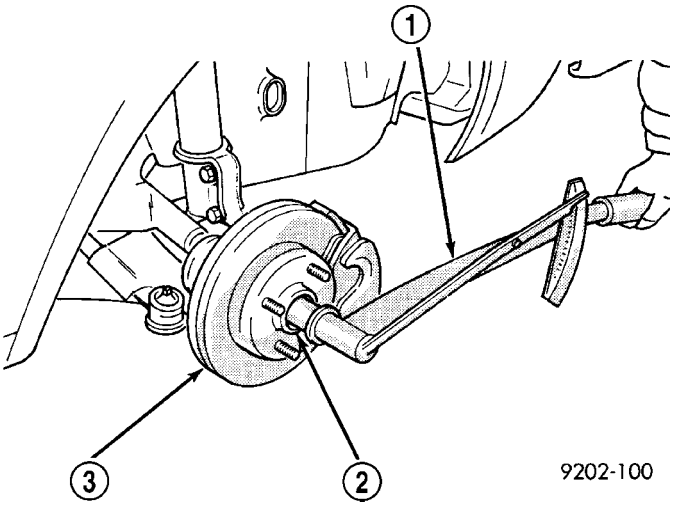

Fig. 20 Torquing Front Hub Nut—Typical

1 - TORQUE WRENCH
2 - HUB
3 - BRAKING DISC

(12) Install front wheel and tire assembly. Install front wheel lug nuts and tighten in the correct sequence (Fig. 21). Tighten lug nuts to 135 N·m (100 ft. lbs.).

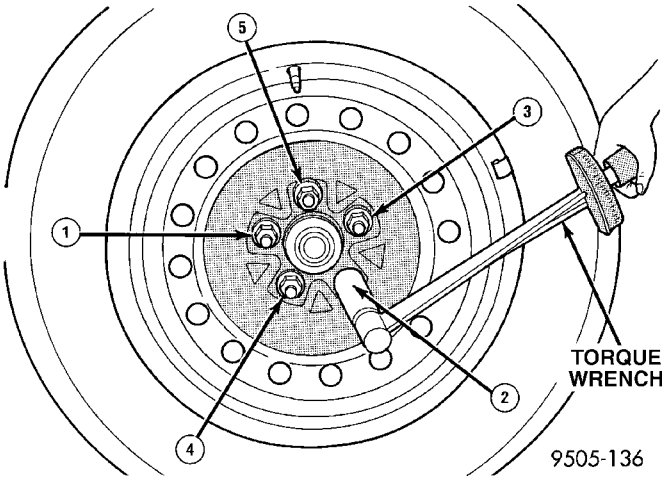

Fig. 21 Wheel Lug Torquing Sequence—Typical

(13) Lower vehicle.

HALF SHAFT (Continued)

SPECIFICATIONS - HALFSHAFT

TORQUE SPECIFICATIONS

DESCRIPTION	N·m	Ft. Lbs.	In. Lbs.
Nut, Ball Joint-to-Knuckle	95	70	—
Nut, Halfshaft-to-Hub/ Bearing	150	110	—
Nut, Tie Rod-to-Knuckle	55	41	—
Nut, Wheel-to-Hub	135	100	—

SPECIAL TOOLS

HALFSHAFT

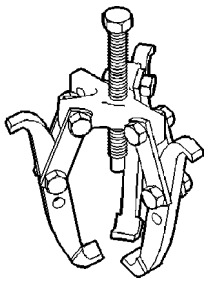

Puller 1026

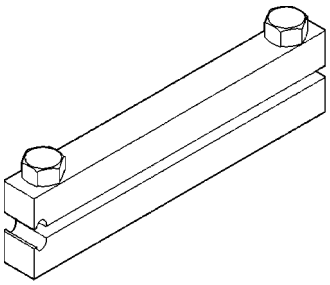

Boot Clamp Installer C-4975A

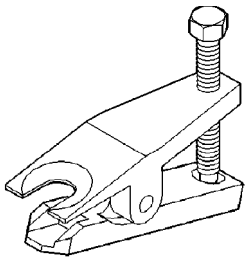

Tie Rod Remover MB-991113

CV BOOT - INNER

REMOVAL

(1) Remove large boot clamp which retains inner tripod joint sealing boot to tripod joint housing and discard. Remove small clamp which retains inner tripod joint sealing boot to interconnecting shaft and discard. Remove the sealing boot from the tripod housing and slide it down the interconnecting shaft.

CAUTION: When removing the tripod joint housing from the spider assembly, hold the bearings in place on the spider trunions to prevent the bearings from falling away.

(2) Slide the tripod joint housing off the spider assembly and the interconnecting shaft (Fig. 22).

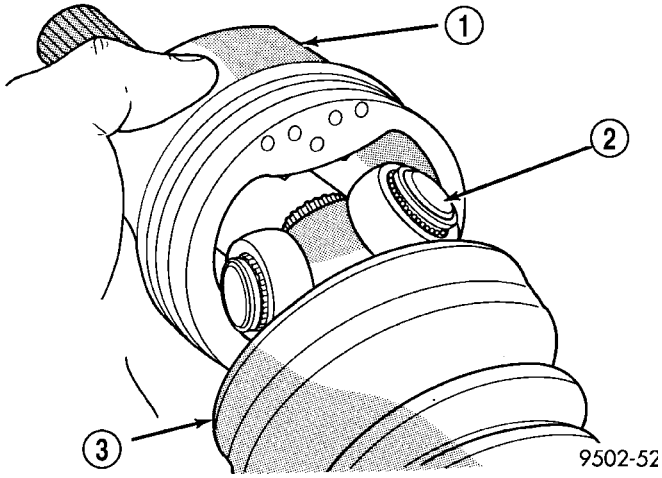

Fig. 22 Spider Assembly Removal from Tripod Joint Housing

1 - TRIPOD JOINT HOUSING
2 - SPIDER ASSEMBLY
3 - SEALING BOOT

CV BOOT - INNER (Continued)

(3) Remove snap ring which retains spider assembly to interconnecting shaft (Fig. 23). Remove the spider assembly from interconnecting shaft. If spider assembly will not come off interconnecting shaft by hand, it can be removed by tapping spider assembly with a brass drift (Fig. 24). **Do not hit the outer tripod bearings in an attempt to remove spider assembly from interconnecting shaft.**

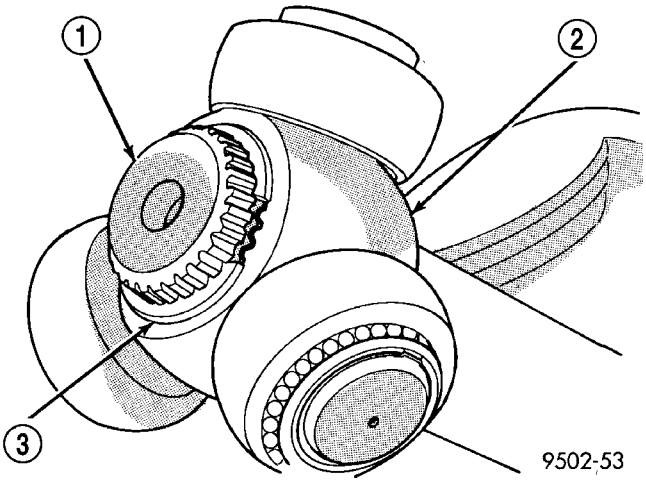

Fig. 23 Spider Assembly Retaining Snap Ring

1 - INTERCONNECTING SHAFT
2 - SPIDER ASSEMBLY
3 - RETAINING SNAP RING

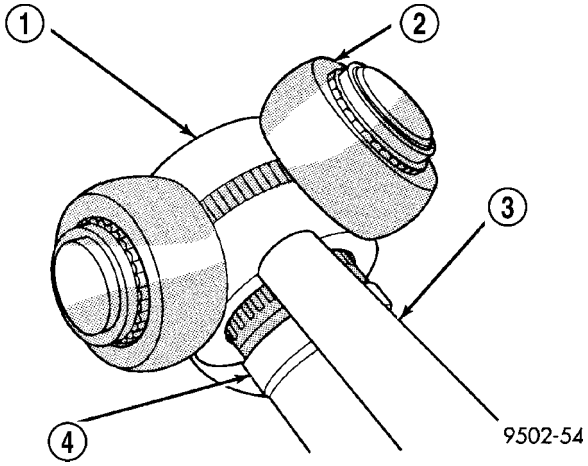

Fig. 24 Spider Assembly Removal from Interconnecting Shaft

1 - SPIDER ASSEMBLY
2 - DO NOT HIT SPIDER ASSEMBLY BEARINGS WHEN REMOVING SPIDER ASSEMBLY
3 - BRASS DRIFT
4 - INTERCONNECTING SHAFT

(4) Slide sealing boot off interconnecting shaft.

(5) Thoroughly clean and inspect spider assembly, tripod joint housing, and interconnecting shaft for any signs of excessive wear. **If any parts show signs of excessive wear, the driveshaft assembly will require replacement. Component parts of these driveshaft assemblies are not serviceable.**

INSTALLATION

(1) Slide inner tripod joint seal boot retaining clamp, onto interconnecting shaft. Then, slide the replacement inner tripod joint sealing boot onto the interconnecting shaft. **Inner tripod joint seal boot MUST be positioned on interconnecting shaft, so the raised bead on the inside of the seal boot is in groove on interconnecting shaft (Fig. 25).**

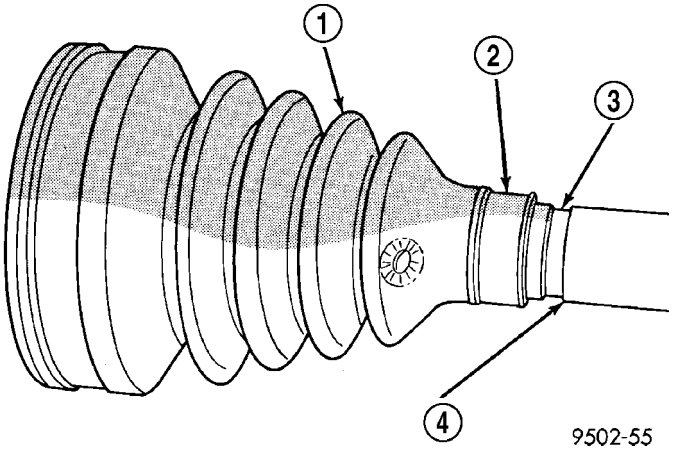

Fig. 25 Sealing Boot Installation on Interconnecting Shaft

1 - SEALING BOOT
2 - RAISED BEAD IN THIS AREA OF SEALING BOOT
3 - GROOVE
4 - INTERCONNECTING SHAFT

CV BOOT - INNER (Continued)

(2) Install spider assembly onto interconnecting shaft (Fig. 26). Spider assembly must be installed on interconnecting shaft far enough to fully install spider retaining snap ring. If spider assembly will not fully install on interconnecting shaft by hand, it can be installed by tapping the spider body with a brass drift (Fig. 27). **Do not hit the outer tripod bearings in an attempt to install spider assembly on interconnecting shaft.**

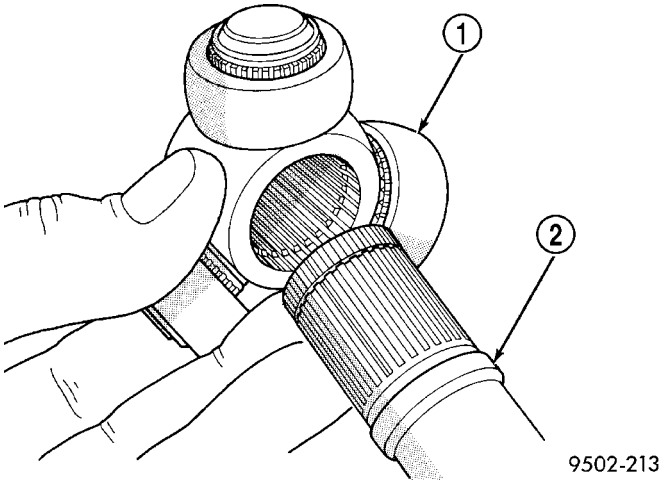

Fig. 26 Spider Assembly Installation on Interconnecting Shaft

1 - SPIDER ASSEMBLY
2 - INTERCONNECTING SHAFT

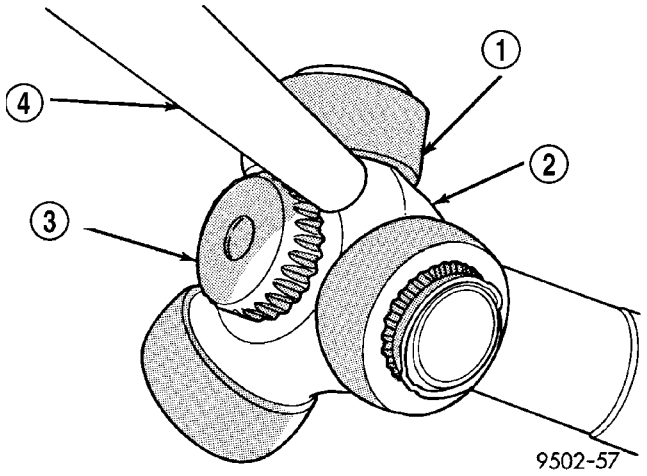

Fig. 27 Installing Spider Assembly on Interconnecting Shaft

1 - DO NOT HIT BEARINGS WHEN INSTALLING THE SPIDER ASSEMBLY
2 - SPIDER ASSEMBLY
3 - INTERCONNECTING SHAFT
4 - BRASS DRIFT

(3) Install the spider assembly to interconnecting shaft retaining snap ring into groove on end of interconnecting shaft (Fig. 28). Be sure the snap ring is fully seated into groove on interconnecting shaft.

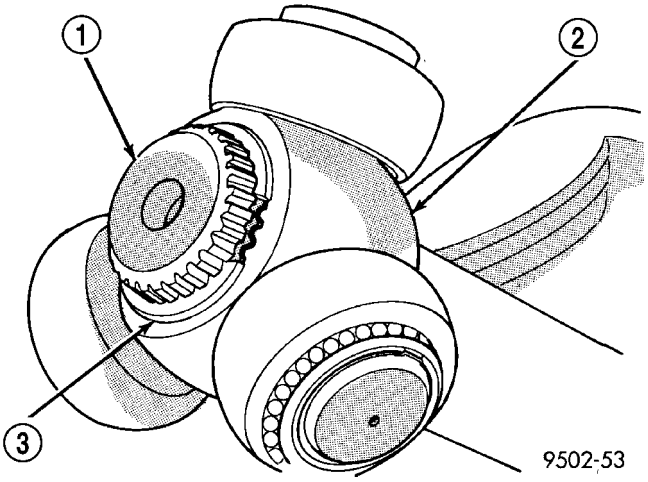

Fig. 28 Spider Assembly Retaining Snap Ring Installed

1 - INTERCONNECTING SHAFT
2 - SPIDER ASSEMBLY
3 - RETAINING SNAP RING

(4) Distribute 1/2 the amount of grease provided in the seal boot service package (DO NOT USE ANY OTHER TYPE OF GREASE) into tripod housing. Put the remaining amount into the sealing boot.

(5) Align tripod housing with spider assembly and then slide tripod housing over spider assembly and interconnecting shaft (Fig. 29).

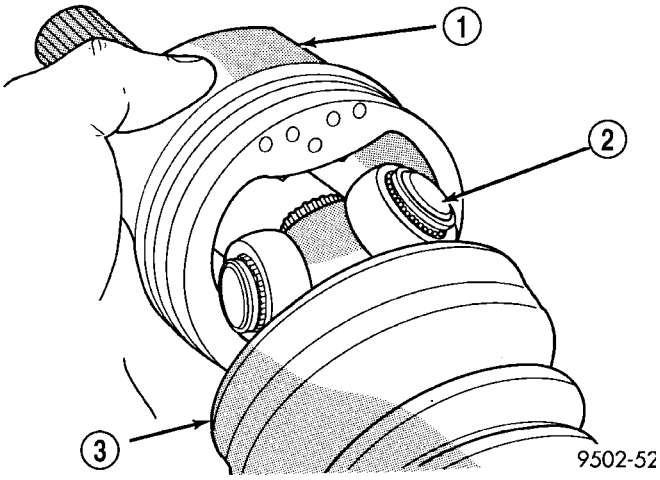

Fig. 29 Installing Tripod Housing on Spider Assembly

1 - TRIPOD JOINT HOUSING
2 - SPIDER ASSEMBLY
3 - SEALING BOOT

CV BOOT - INNER (Continued)

(6) Install inner tripod joint seal boot to interconnecting shaft clamp evenly on sealing boot.

(7) Clamp sealing boot onto interconnecting shaft using crimper, Special Tool C-4975-A and the following procedure. Place crimping tool C-4975-A over bridge of clamp (Fig. 30). Tighten nut on crimping tool C-4975-A until jaws on tool are closed completely together, face to face (Fig. 31).

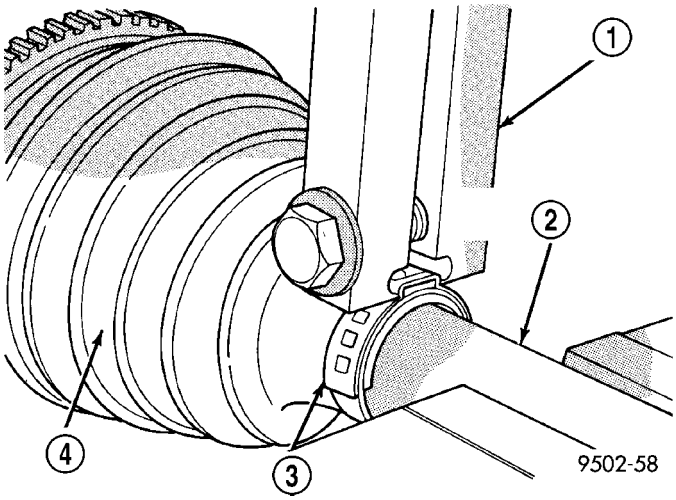

Fig. 30 Crimping Tool Installed on Sealing Boot Clamp

1 - SPECIAL TOOL C-4975A
2 - INTERCONNECTING SHAFT
3 - CLAMP
4 - SEALING BOOT

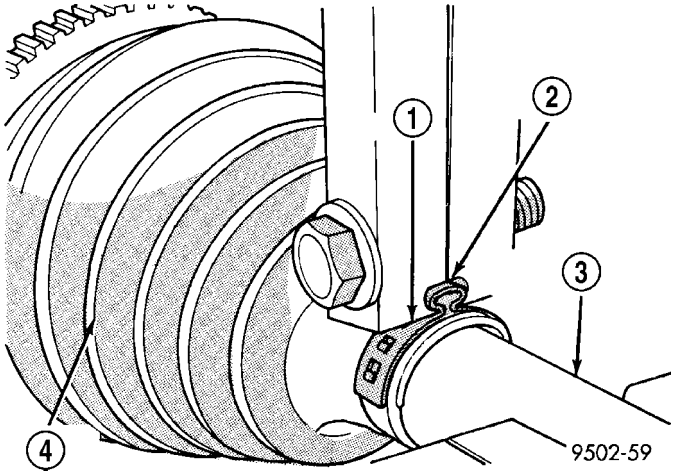

Fig. 31 Sealing Boot Retaining Clamp Installed

1 - CLAMP
2 - JAWS OF SPECIAL TOOL C-4975A MUST BE CLOSED COMPLETELY TOGETHER HERE
3 - INTERCONNECTING SHAFT
4 - SEALING BOOT

CAUTION: Seal must not be dimpled, stretched or out of shape in any way. If seal is NOT shaped correctly, equalize pressure in seal and shape it by hand.

(8) Position sealing boot into the tripod housing retaining groove. Install seal boot retaining clamp evenly on sealing boot.

CAUTION: The following positioning procedure determines the correct air pressure inside the inner tripod joint assembly prior to clamping the sealing boot to inner tripod joint housing. If this procedure is not done prior to clamping sealing boot to tripod joint housing sealing boot durability can be adversely affected.

CAUTION: When venting the inner tripod joint assembly, use care so inner tripod sealing boot does not get punctured, or in any other way damaged. If sealing boot is punctured, or damaged in any way while being vented, the sealing boot can not be used.

(9) Insert a trim stick between the tripod joint and the sealing boot to vent inner tripod joint assembly (Fig. 32). **When inserting trim stick between tripod housing and sealing boot ensure trim stick is held flat and firmly against the tripod housing. If this is not done damage to the sealing boot can occur.** If inner tripod joint has a Hytrel (hard plastic) sealing boot, be sure trim stick is inserted between soft rubber insert and tripod housing not the hard plastic sealing boot and soft rubber insert.

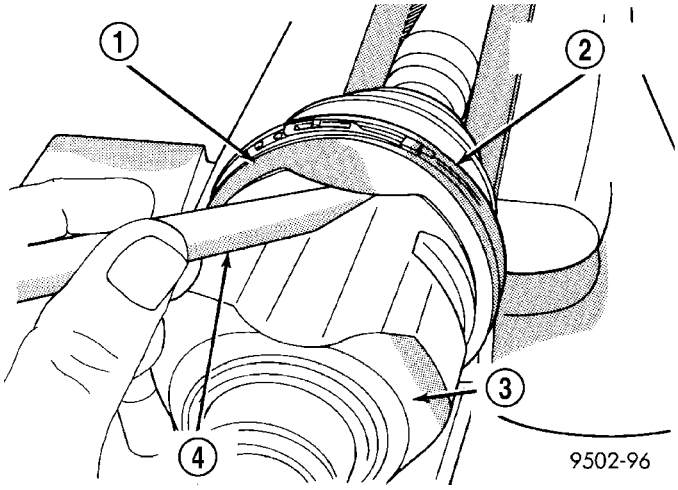

Fig. 32 Trim Stick Inserted for Venting Tripod Joint

1 - INNER TRIPOD JOINT SEALING BOOT
2 - SEALING BOOT CLAMP
3 - INNER TRIPOD JOINT HOUSING
4 - TRIM STICK

CV BOOT - INNER (Continued)

(10) With trim stick inserted between sealing boot and tripod joint housing, position the interconnecting shaft so it is at the center of its travel in the tripod joint housing. Remove the trim stick from between the sealing boot and the tripod joint housing. **This procedure will equalize the air pressure in the tripod joint, preventing premature sealing boot failure.**

(11) Position trilobal boot to interface with the tripod housing. The lobes of the boot must be properly aligned with the recess's of the tripod housing.

(12) Clamp tripod joint sealing boot to tripod joint, using required procedure for type of boot clamp application.

CRIMP TYPE BOOT CLAMP

If seal boot uses crimp type boot clamp:

- Clamp sealing boot onto tripod housing using Crimper, Special Tool C-4975-A.
- Place crimping tool C-4975-A over bridge of clamp (Fig. 33).
- Tighten nut on crimping tool C-4975-A until jaws on tool are closed completely together, face to face (Fig. 34).

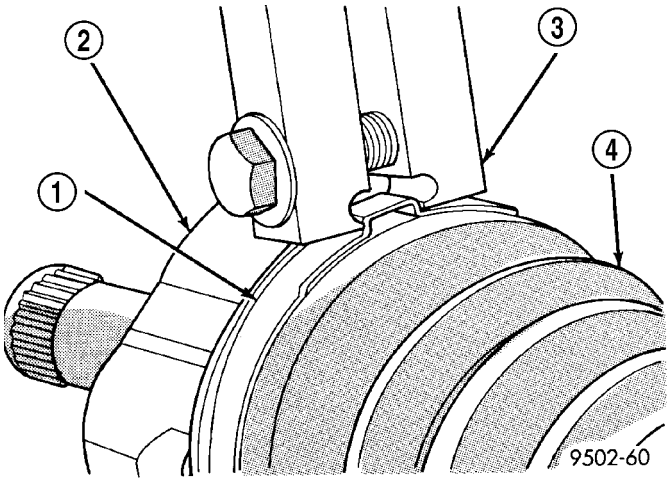

Fig. 33 Crimping Tool Installed on Sealing Boot Clamp

1 - CLAMP
2 - TRIPOD JOINT HOUSING
3 - SPECIAL TOOL C-4975A
4 - SEALING BOOT

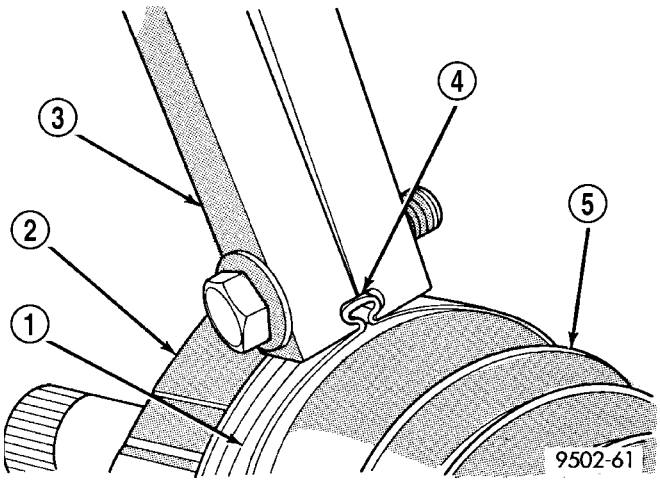

Fig. 34 Sealing Boot Retaining Clamp Installed

1 - CLAMP
2 - TRIPOD HOUSING
3 - SPECIAL TOOL C-4975A
4 - JAWS OF SPECIAL TOOL C-4975A MUST BE CLOSED COMPLETELY TOGETHER HERE
5 - SEALING BOOT

LATCHING TYPE BOOT CLAMP

If seal boot uses low profile latching type boot clamp:

- Clamp sealing boot onto tripod housing using clamp locking tool, Snap-On YA3050 or an equivalent.
- Place prongs of clamp locking tool in the holes of the clamp (Fig. 35).
- Squeeze tool together until top band of clamp is latched behind the two tabs on lower band of clamp (Fig. 36).

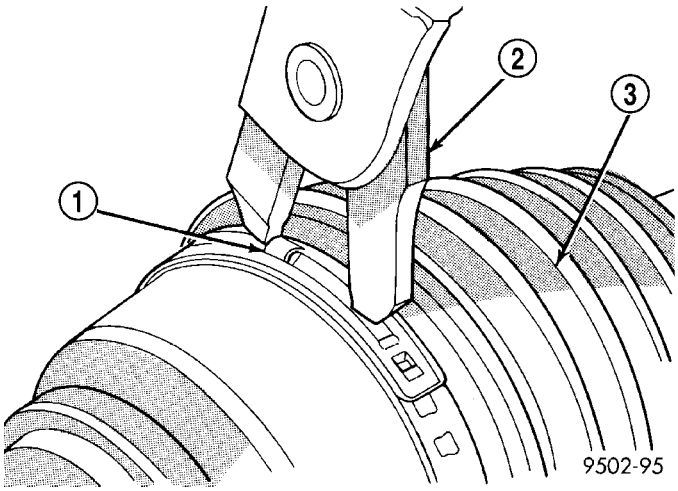

Fig. 35 Clamping Tool Installed on Sealing Boot Clamp

1 - CLAMP
2 - SPECIAL TOOL YA3050
3 - SEALING BOOT

CV BOOT - INNER (Continued)

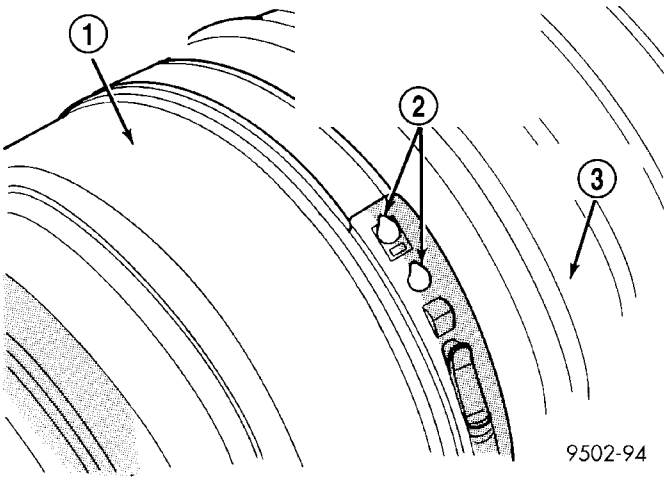

Fig. 36 Sealing Boot Clamp Properly Installed

1 - INNER TRIPOD JOINT HOUSING
2 - TOP BAND OF CLAMP MUST BE RETAINED BY TABS AS SHOWN HERE TO CORRECTLY LATCH BOOT CLAMP
3 - SEALING BOOT

CV BOOT - OUTER

REMOVAL

(1) Remove large boot clamp retaining C/V joint sealing boot to C/V joint housing (Fig. 37) and discard. Remove small clamp that retains outer C/V joint sealing boot to interconnecting shaft and discard. Remove sealing boot from outer C/V joint housing and slide it down interconnecting shaft.

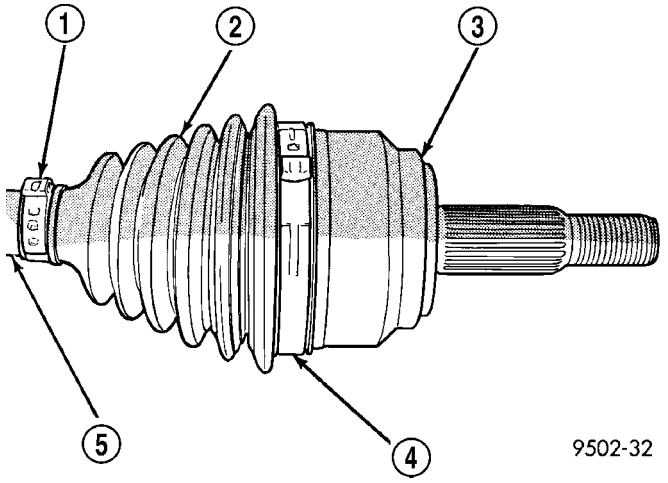

Fig. 37 Outer C/V Joint Seal Boot Clamps

1 - SMALL CLAMP
2 - SEALING BOOT
3 - OUTER C/V JOINT HOUSING
4 - LARGE CLAMP
5 - INTERCONNECTING SHAFT

(2) Wipe away grease to expose outer C/V joint and interconnecting shaft.

(3) Remove outer C/V joint from interconnecting shaft using the following procedure: Support interconnecting shaft in a vise **equipped with protective caps on jaws of vise to prevent damage to interconnecting shaft.** Then, using a **soft–faced hammer,** sharply hit the end of the C/V joint housing to dislodge housing from internal circlip on interconnecting shaft (Fig. 38). Then slide outer C/V joint off end of interconnecting shaft, joint may have to be tapped off shaft using a **soft–faced** hammer.

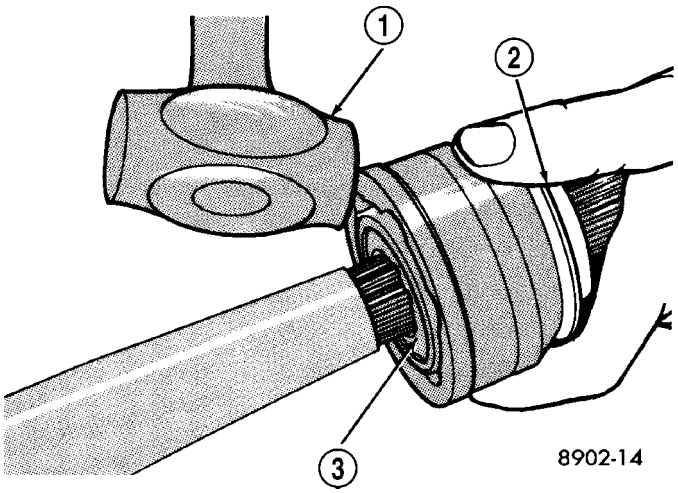

Fig. 38 Outer C/V Joint Removal from Interconnecting Shaft

1 - SOFT HAMMER (TAP HOUSING)
2 - WEAR SLEEVE
3 - CIRCLIP (OUTER END OF SHAFT)

(4) Remove large circlip (Fig. 39) from the interconnecting shaft before attempting to remove outer C/V joint sealing boot.

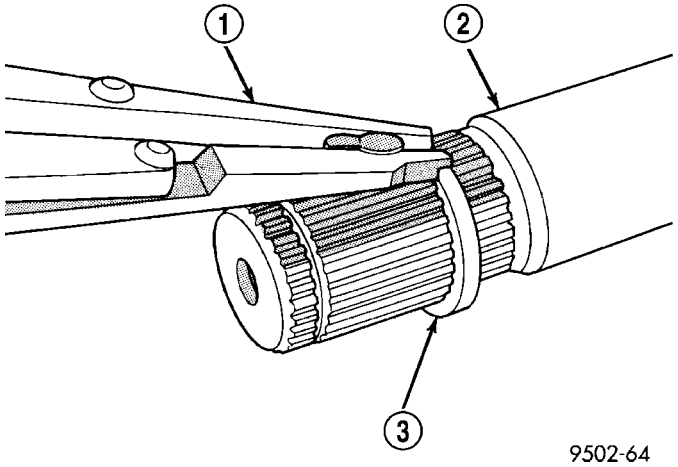

Fig. 39 Circlip Removal from Interconnecting Shaft

1 - SNAP RING PLIERS
2 - INTERCONNECTING SHAFT
3 - CIRCLIP

CV BOOT - OUTER (Continued)

(5) Slide failed sealing boot off interconnecting shaft.

(6) Thoroughly clean and inspect outer C/V joint assembly and interconnecting joint for any signs of excessive wear. **If any parts show signs of excessive wear, the driveshaft assembly will require replacement. Component parts of these driveshaft assemblies are not serviceable.**

INSTALLATION

(1) Slide new sealing boot to interconnecting shaft retaining clamp onto interconnecting shaft. Slide the outer C/V joint assembly sealing boot onto the interconnecting shaft (Fig. 40). **Seal boot MUST be positioned on interconnecting shaft so the raised bead on the inside of the seal boot is in groove on interconnecting shaft.**

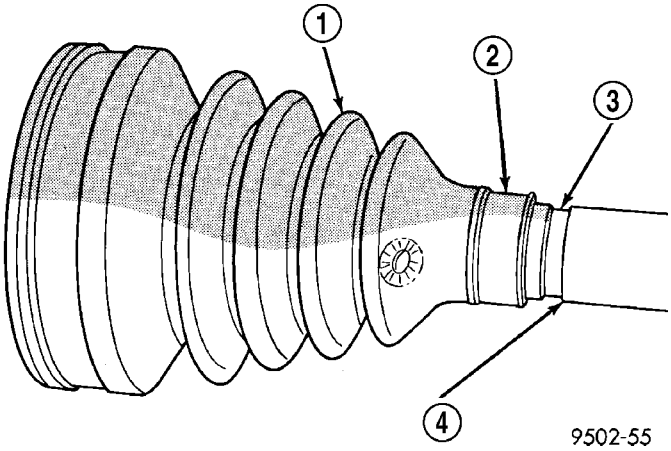

Fig. 40 Sealing Boot Installation on Interconnecting Shaft

1 - SEALING BOOT
2 - RAISED BEAD IN THIS AREA OF SEALING BOOT
3 - GROOVE
4 - INTERCONNECTING SHAFT

(2) Align splines on interconnecting shaft with splines on cross of outer C/V joint assembly and start outer C/V joint onto interconnecting shaft.

(3) Install outer C/V joint assembly onto interconnecting shaft by using a **soft–faced** hammer and tapping end of stub axle (with nut installed) until outer C/V joint is fully seated on interconnecting shaft (Fig. 41).

(4) Outer C/V joint assembly must be installed on interconnecting shaft until cross of outer C/V joint assembly is seated against circlip on interconnecting shaft (Fig. 42).

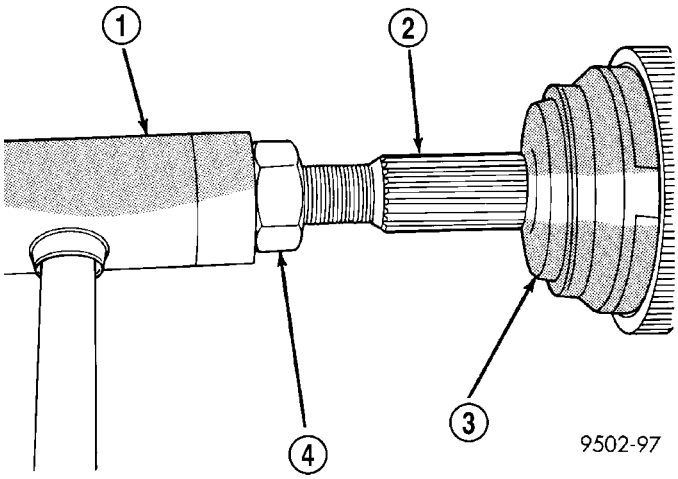

Fig. 41 Outer C/V

1 - SOFT FACED HAMMER
2 - STUB AXLE
3 - OUTER C/V JOINT
4 - NUT

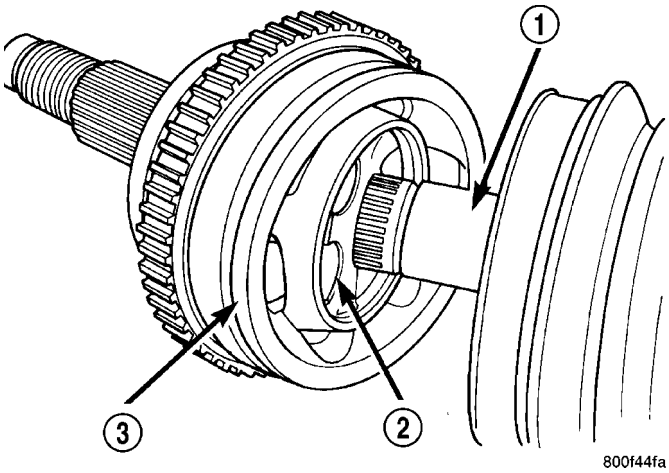

Fig. 42 Outer C/V Joint Correctly Installed on Interconnecting Shaft

1 - INTERCONNECTING SHAFT
2 - CROSS
3 - OUTER C/V JOINT ASSEMBLY

(5) Distribute 1/2 the amount of grease provided in seal boot service package (DO NOT USE ANY OTHER TYPE OF GREASE) into outer C/V joint assembly housing. Put the remaining amount into the sealing boot.

CV BOOT - OUTER (Continued)

(6) Install outer C/V joint sealing boot to interconnecting shaft clamp evenly on sealing boot.

(7) Clamp sealing boot onto interconnecting shaft using crimper, Special Tool C-4975-A and the following procedure. Place crimping tool C-4975-A over bridge of clamp (Fig. 43). Tighten nut on crimping tool C-4975-A until jaws on tool are closed completely together, face to face (Fig. 44).

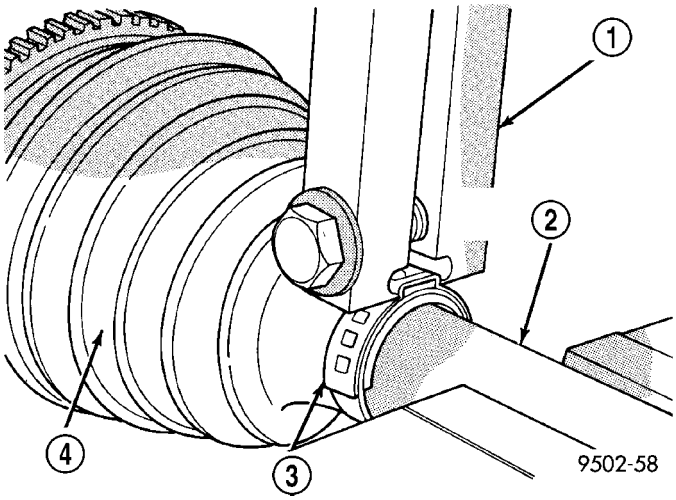

Fig. 43 Crimping Tool Installed on Sealing Boot Clamp

1 - SPECIAL TOOL C-4975A
2 - INTERCONNECTING SHAFT
3 - CLAMP
4 - SEALING BOOT

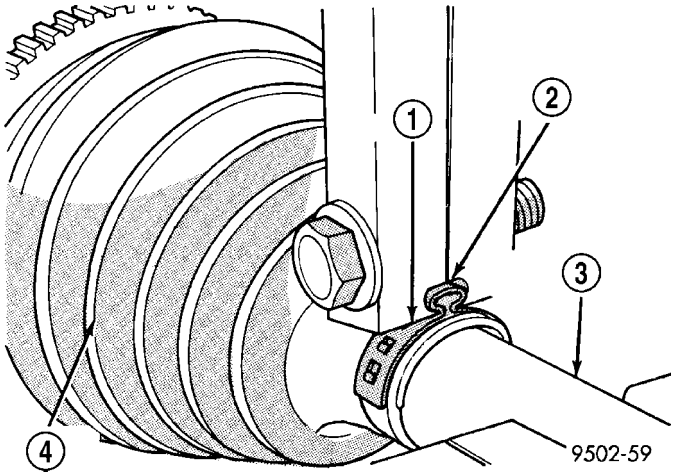

Fig. 44 Sealing Boot Retaining Clamp Installed

1 - CLAMP
2 - JAWS OF SPECIAL TOOL C-4975A MUST BE CLOSED COMPLETELY TOGETHER HERE
3 - INTERCONNECTING SHAFT
4 - SEALING BOOT

CAUTION: Seal must not be dimpled, stretched, or out–of–shape in any way. If seal is NOT shaped correctly, equalize pressure in seal and shape it by hand.

(8) Position outer C/V joint sealing boot into its retaining groove on outer C/V joint housing. Install sealing boot to outer C/V joint retaining clamp evenly on sealing boot.

(9) Clamp sealing boot onto outer C/V joint housing using Crimper, Special Tool C-4975-A and the following procedure. Place crimping tool C-4975-A over bridge of clamp (Fig. 45). Tighten nut on crimping tool C-4975-A until jaws on tool are closed completely together, face to face (Fig. 46).

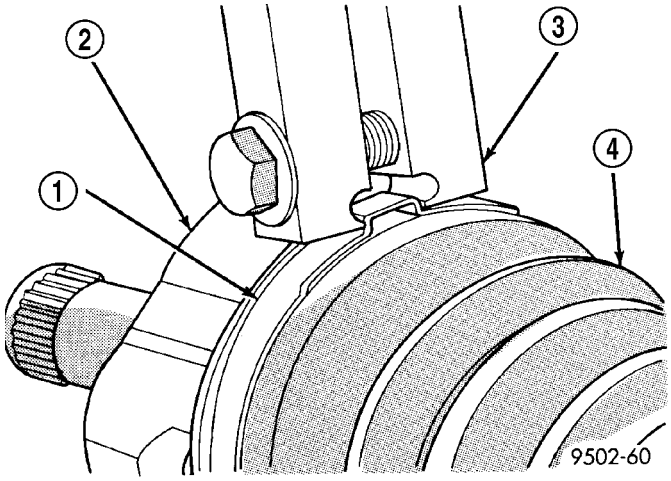

Fig. 45 Crimping Tool Installed on Sealing Boot Clamp

1 - CLAMP
2 - TRIPOD JOINT HOUSING
3 - SPECIAL TOOL C-4975A
4 - SEALING BOOT

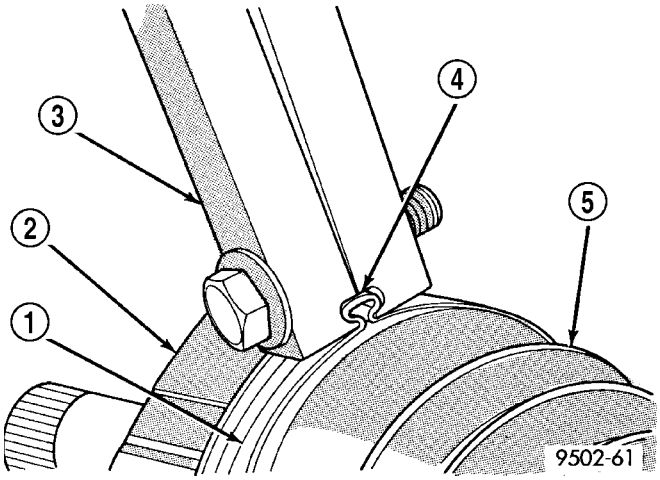

Fig. 46 Sealing Boot Retaining Clamp Installed

1 - CLAMP
2 - TRIPOD HOUSING
3 - SPECIAL TOOL C-4975A
4 - JAWS OF SPECIAL TOOL C-4975A MUST BE CLOSED COMPLETELY TOGETHER HERE
5 - SEALING BOOT

BRAKES

TABLE OF CONTENTS

page

BRAKES - BASE 1

BRAKES - ABS 49

BRAKES - BASE

TABLE OF CONTENTS

page

BRAKES - BASE
WARNING 2
CAUTION 2
STANDARD PROCEDURE - BASE BRAKE BLEEDING 3
SPECIFICATIONS
BRAKE FASTENER TORQUE 4
SPECIAL TOOLS
BASE BRAKE SYSTEM 4
BRAKE FLUID LEVEL SWITCH
REMOVAL 5
INSTALLATION 5
ASPIRATOR VALVE
DESCRIPTION 5
OPERATION 5
REMOVAL 5
INSTALLATION 5
BRAKE LINES
DESCRIPTION - BRAKE TUBES AND HOSES . . 6
OPERATION - BRAKE TUBES AND HOSES 6
INSPECTION - BRAKE TUBES AND HOSES 6
BRAKE PADS/SHOES - FRONT
REMOVAL - FRONT DISC BRAKE SHOES 6
CLEANING - DISC BRAKE SHOES 8
INSPECTION - DISC BRAKE SHOES 8
INSTALLATION - FRONT DISC BRAKE SHOES . 8
BRAKE PADS/SHOES - REAR DISC
REMOVAL - REAR DISC BRAKE SHOES 9
CLEANING - DISC BRAKE SHOES 11
INSPECTION - DISC BRAKE SHOES 11
INSTALLATION - REAR DISC BRAKE SHOES . . 11
BRAKE PADS/SHOES - REAR DRUM
REMOVAL 12
CLEANING 13
INSPECTION 13
INSTALLATION 13
ADJUSTMENTS
ADJUSTMENT - DRUM BRAKE SHOES 14
DISC BRAKE CALIPER - FRONT
REMOVAL - FRONT DISC BRAKE CALIPER . . . 15
DISASSEMBLY
DISASSEMBLY - CALIPER GUIDE PIN BUSHINGS (DISC/DISC BRAKES) 16
DISASSEMBLY - CALIPER PISTON AND SEAL 16
CLEANING - CALIPER 17
INSPECTION - CALIPER 17
ASSEMBLY
ASSEMBLY - CALIPER GUIDE PIN BUSHINGS (DISC/DISC BRAKES) 17
ASSEMBLY - CALIPER PISTON AND SEAL . . 17
INSTALLATION - FRONT DISC BRAKE CALIPER 18
DISC BRAKE CALIPER - REAR
REMOVAL - REAR DISC BRAKE CALIPER 19
DISASSEMBLY
DISASSEMBLY - CALIPER GUIDE PIN BUSHINGS (DISC/DISC BRAKES) 20
DISASSEMBLY - CALIPER PISTON AND SEAL 20
CLEANING - CALIPER 21
INSPECTION - CALIPER 21
ASSEMBLY
ASSEMBLY - CALIPER GUIDE PIN BUSHINGS (DISC/DISC BRAKES) 21
ASSEMBLY - CALIPER PISTON AND SEAL . . 21
INSTALLATION - REAR DISC BRAKE CALIPER 22
DRUM
DIAGNOSIS AND TESTING - BRAKE DRUM . . . 23
STANDARD PROCEDURE - BRAKE DRUM MACHINING 23
REMOVAL 23

INSTALLATION 24
FLUID
DIAGNOSIS AND TESTING - BRAKE FLUID CONTAMINATION 25
STANDARD PROCEDURE - BRAKE FLUID LEVEL CHECKING 25
SPECIFICATIONS
BRAKE FLUID 25
JUNCTION BLOCK
DESCRIPTION 26
OPERATION 26
REMOVAL 26
INSTALLATION 26
MASTER CYLINDER
STANDARD PROCEDURE - MASTER CYLINDER BLEEDING 27
REMOVAL 27
INSTALLATION 28
POWER BRAKE BOOSTER
DIAGNOSIS AND TESTING - POWER BRAKE BOOSTER 28
REMOVAL - POWER BRAKE BOOSTER 28
INSTALLATION - POWER BRAKE BOOSTER . . 30
PROPORTIONING VALVE
DESCRIPTION 30
OPERATION 30
DIAGNOSIS AND TESTING - PROPORTIONING VALVE 30
ROTOR
DIAGNOSIS AND TESTING - BRAKE ROTOR . . 32
STANDARD PROCEDURE - BRAKE ROTOR MACHINING 35
REMOVAL
REMOVAL - FRONT ROTOR 36
REMOVAL - REAR ROTOR 36
INSTALLATION
INSTALLATION - FRONT ROTOR 36
INSTALLATION - REAR ROTOR 36
SUPPORT PLATE
REMOVAL 37
INSTALLATION 37
WHEEL CYLINDER
REMOVAL 38
INSTALLATION 38
PARKING BRAKE
ADJUSTMENTS
ADJUSTMENT - PARKING BRAKE 39
CABLES - PARKING BRAKE
REMOVAL 40
INSTALLATION 42
LEVER - PARKING BRAKE
REMOVAL 44
INSTALLATION 45
SHOES - PARKING BRAKE
REMOVAL 46
INSTALLATION 47

BRAKES - BASE

WARNING

WARNING: DUST AND DIRT ACCUMULATING ON BRAKE PARTS DURING NORMAL USE MAY CONTAIN ASBESTOS FIBERS FROM PRODUCTION OR AFTERMARKET BRAKE LININGS. BREATHING EXCESSIVE CONCENTRATIONS OF ASBESTOS FIBERS CAN CAUSE SERIOUS BODILY HARM. EXERCISE CARE WHEN SERVICING BRAKE PARTS. DO NOT SAND OR GRIND BRAKE LINING UNLESS EQUIPMENT USED IS DESIGNED TO CONTAIN THE DUST RESIDUE. DO NOT CLEAN BRAKE PARTS WITH COMPRESSED AIR OR BY DRY BRUSHING. CLEANING SHOULD BE DONE BY DAMPENING THE BRAKE COMPONENTS WITH A FINE MIST OF WATER, THEN WIPING THE BRAKE COMPONENTS CLEAN WITH A DAMPENED CLOTH. DISPOSE OF CLOTH AND ALL RESIDUE CONTAINING ASBESTOS FIBERS IN AN IMPERMEABLE CONTAINER WITH THE APPROPRIATE LABEL. FOLLOW PRACTICES PRESCRIBED BY THE OCCUPATIONAL SAFETY AND HEALTH ADMINISTRATION (OSHA) AND THE ENVIRONMENTAL PROTECTION AGENCY (EPA) FOR THE HANDLING, PROCESSING, AND DISPOSING OF DUST OR DEBRIS THAT MAY CONTAIN ASBESTOS FIBERS.

CAUTION

CAUTION: During service procedures, grease or any other foreign material must be kept off brake shoes and braking surfaces of brake rotor or drum, and external surfaces of hub and bearing assembly.

CAUTION: Brake rotor and caliper handling must be done in such a way as to avoid damage to the rotor, especially the machined surfaces, and scratching or nicking of the brake linings.

CAUTION: Only the recommended jacking or hoisting procedures for this vehicle are to be used whenever it is necessary to lift a vehicle. Failure to raise a vehicle utilizing the recommended lift points can result in damage to the vehicle. (Refer to LUBRICATION & MAINTENANCE/HOISTING - STANDARD PROCEDURE)

BRAKES - BASE (Continued)

STANDARD PROCEDURE - BASE BRAKE BLEEDING

NOTE: For bleeding the ABS hydraulic system, (Refer to 5 - BRAKES - ABS - STANDARD PROCEDURE).

CAUTION: Before removing the master cylinder cap, wipe it clean to prevent dirt and other foreign matter from dropping into the master cylinder reservoir.

CAUTION: Use only Mopar® brake fluid or an equivalent from a fresh, tightly sealed container. Brake fluid must conform to DOT 3 specifications.

Do not pump the brake pedal at any time while having a bleeder screw open during the bleeding process. This will only increase the amount of air in the system and make additional bleeding necessary.

Do not allow the master cylinder reservoir to run out of brake fluid while bleeding the system. An empty reservoir will allow additional air into the brake system. Check the fluid level frequently and add fluid as needed.

The following wheel circuit sequence for bleeding the brake hydraulic system should be used to ensure adequate removal of all trapped air from the hydraulic system.

- Left rear wheel
- Right front wheel
- Right rear wheel
- Left front wheel

MANUAL BLEEDING

NOTE: To bleed the brakes manually, the aid of a helper will be required.

(1) Attach a clear plastic hose to the bleeder screw and feed the hose into a clear jar containing enough fresh brake fluid to submerge the end of the hose (Fig. 1).

(2) Have a helper pump the brake pedal three or four times and hold it in the down position.

(3) With the pedal in the down position, open the bleeder screw at least 1 full turn.

(4) Once the brake pedal has dropped, close the bleeder screw. After the bleeder screw is closed, release the brake pedal.

(5) Repeat the above steps until all trapped air is removed from that wheel circuit (usually four or five times).

(6) Bleed the remaining wheel circuits in the same manner until all air is removed from the brake system. Monitor the fluid level in the master cylinder reservoir to make sure it does not go dry.

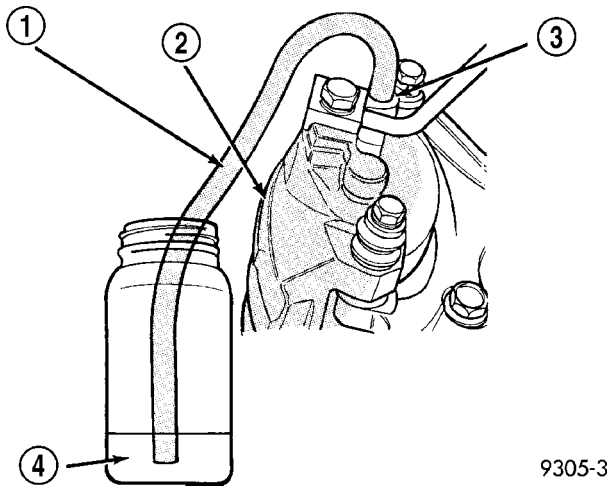

Fig. 1 Proper Method for Purging Air From Brake System (Typical)

1 - CLEAR HOSE
2 - BRAKE CALIPER
3 - BLEEDER SCREW
4 - CLEAN BRAKE FLUID

(7) Check the brake pedal travel. If pedal travel is excessive or has not been improved, some air may still be trapped in the system. Rebleed the brakes as necessary.

(8) Test drive the vehicle to verify the brakes are operating properly and pedal feel is correct.

PRESSURE BLEEDING

NOTE: Follow pressure bleeder manufacturer's instructions for use of pressure bleeding equipment.

Use bleeder tank, Special Tool C-3496-B or equivalent, with master cylinder reservoir adapter, Special Tool 8224, to pressurize the hydraulic system for bleeding.

Following the same wheel circuit sequence as prescribed for manual bleeding.

(1) Attach a clear plastic hose to the bleeder screw and feed the hose into a clear jar containing enough fresh brake fluid to submerge the end of the hose (Fig. 1).

(2) Open the bleeder screw at least one full turn or more to obtain a steady stream of brake fluid.

(3) After approximately 4–8 ounces of fluid have been bled through the brake circuit and an air-free flow is maintained in the clear plastic hose and jar, close the bleeder screw.

(4) Repeat this procedure at all the remaining bleeder screws.

BRAKES - BASE (Continued)

(5) Check the brake pedal travel. If pedal travel is excessive or has not been improved, some air may still be trapped in the system. Rebleed the brakes as necessary.

(6) Test drive the vehicle to verify the brakes are operating properly and pedal feel is correct.

SPECIFICATIONS

BRAKE FASTENER TORQUE

DESCRIPTION	N·m	Ft. Lbs.	In. Lbs.
ABS ICU Mounting Bolts To Bracket	11	—	97
ABS ICU Mounting Bracket-To-Lower Radiator Support Bolts	28	21	250
ABS CAB-To-HCU Mounting Screws	2	—	17
ABS Wheel Speed Sensor Mounting Bolt	8	—	75
Brake Tube Nuts	17	—	145
Brake Hose-To-Caliper Banjo Bolt	35	26	—
Disc Brake Caliper Guide Pin Bolts	35	26	—
Disc Brake Caliper Bleeder Screw	15	—	125
Front Brake Hose Intermediate Bracket Bolt	12	—	105
Front Caliper Adapter Mounting Bolts	108	80	—
Junction Block (Non-ABS Brakes) Mounting Bolts	28	21	250
Master Cylinder Mounting Nuts	26	19	230
Power Brake Booster Mounting Nuts	28	21	250
Parking Brake Lever Mounting Bolts	28	21	250
Rear Brake Hose-To-Support Plate Bracket Screw	13	10	115
Wheel Cylinder Bleeder Screw	13	10	115
Wheel Cylinder Mounting Bolts	13	10	115
Wheel Mounting (Lug) Nuts	135	100	—

SPECIAL TOOLS

BASE BRAKE SYSTEM

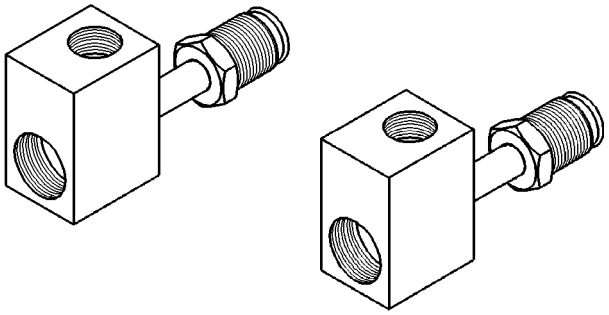

Adapters, Brake Pressure Test 8187

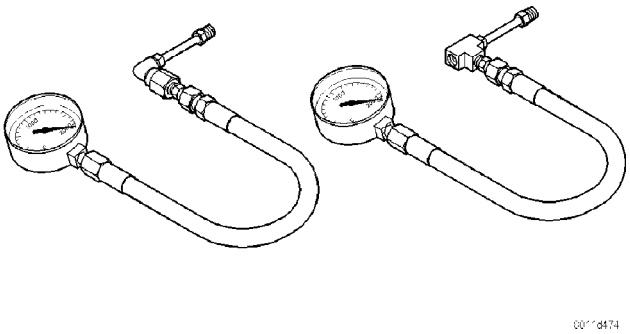

Gauge Set

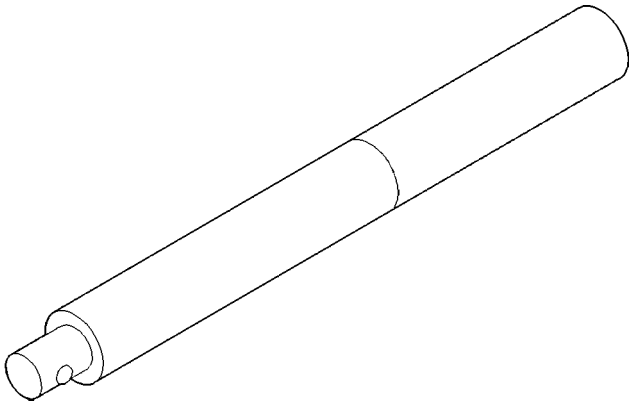

Handle, Universal C-4171

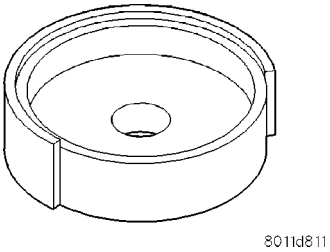

Installer, Dust Boot C-4689

BRAKES - BASE (Continued)

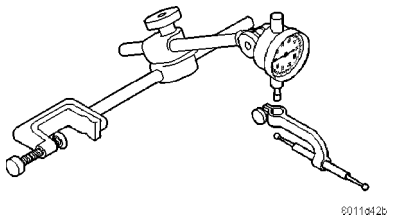

Dial Indicator C-3339

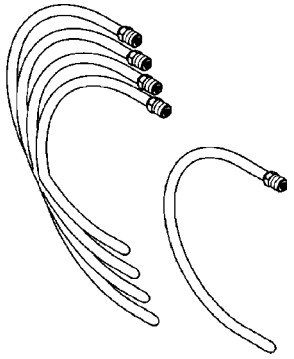

Tubes, Master Cylinder Bleed 8358

BRAKE FLUID LEVEL SWITCH

REMOVAL

(1) Remove wiring harness connector from brake fluid reservoir level switch on the side of the reservoir (Fig. 2).

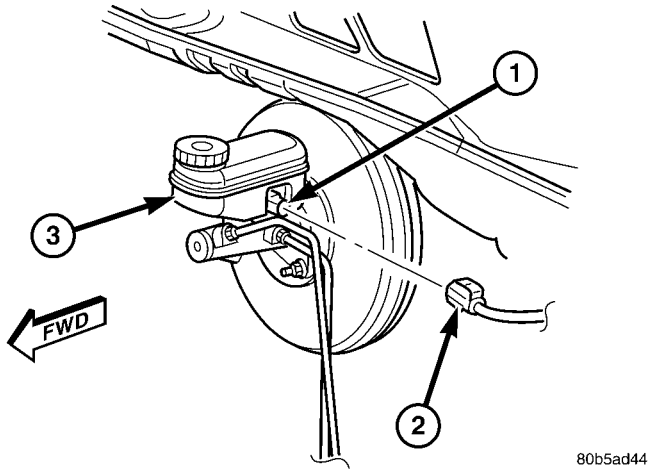

Fig. 2 BRAKE FLUID LEVEL SWITCH

1 - BRAKE FLUID LEVEL SWITCH
2 - WIRING CONNECTOR
3 - FLUID RESERVOIR

(2) Using a small screwdriver, release the retaining tabs on the opposite end of brake fluid level switch (on right side of reservoir) securing it to the reservoir (Fig. 3).

(3) With retaining tabs compressed, grasp the connector end of brake fluid level switch and pull it out of master cylinder brake fluid reservoir.

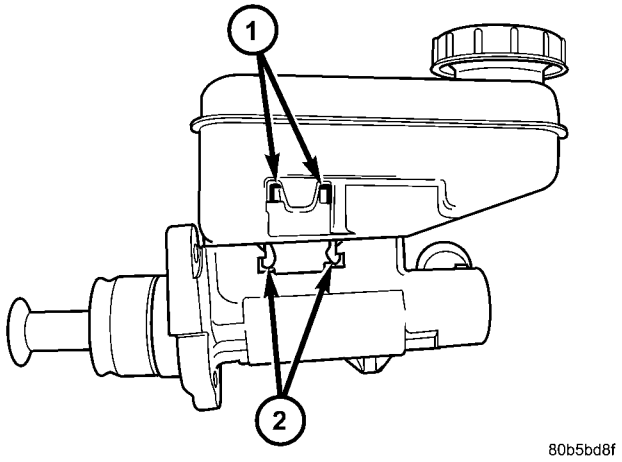

Fig. 3 RETAINING TABS

1 - RETAINING TABS FOR FLUID LEVEL SWITCH
2 - RETAINING TABS FOR FLUID RESERVOIR

INSTALLATION

(1) Insert brake fluid level switch into left side of brake fluid reservoir. Be sure switch is pushed in until retaining tabs lock it to brake fluid reservoir.

(2) Connect vehicle wiring harness connector to brake fluid level switch.

ASPIRATOR VALVE

DESCRIPTION

The aspirator valve is located in the vacuum hose leading to the power brake booster from the engine on V-6 equipped vehicles.

OPERATION

The aspirator valve helps improve vacuum assist response in low vacuum situations.

REMOVAL

(1) Remove hose leading from vacuum source to aspirator valve at valve.

(2) Remove hose leading to booster from valve.

(3) Remove hose leading to air cleaner housing from valve and remove valve from vehicle.

INSTALLATION

(1) Install smaller port on brown half of aspirator valve in hose leading to air cleaner housing.

(2) Install open port on black half of valve in hose leading to power brake booster.

(3) Install larger port on brown half of valve in hose leading from vacuum source.

BRAKE LINES

DESCRIPTION - BRAKE TUBES AND HOSES

The brake tubes are steel with a corrosion-resistant nylon coating applied to the external surfaces. The flex hoses are made of reinforced rubber with fittings at each end.

OPERATION - BRAKE TUBES AND HOSES

The purpose of the chassis brake tubes and flex hoses is to transfer the pressurized brake fluid developed by the master cylinder to the wheel brakes of the vehicle. The flex hoses are made of rubber to allow for the movement of the vehicle's suspension.

INSPECTION - BRAKE TUBES AND HOSES

Flexible rubber hose is used at both front brakes and at the rear axle. Inspection of brake hoses should be performed whenever the brake system is serviced and every 7,500 miles or 12 months, whichever comes first (every engine oil change). Inspect hydraulic brake hoses for surface cracking, scuffing, or worn spots. If the fabric casing of the rubber hose becomes exposed due to cracks or abrasions in the rubber hose cover, the hose should be replaced immediately. Eventual deterioration of the hose can take place with possible burst failure. Faulty installation can cause twisting, resulting in wheel, tire, or chassis interference.

The brake tubing should be inspected periodically for evidence of physical damage or contact with moving or hot components.

The flexible brake tube sections used on this vehicle in the primary and secondary tubes from the master cylinder to the ABS hydraulic control unit connections must also be inspected. This flexible tubing must be inspected for kinks, fraying and contact with other components or with the body of the vehicle.

BRAKE PADS/SHOES - FRONT

REMOVAL - FRONT DISC BRAKE SHOES

(1) Raise the vehicle. (Refer to LUBRICATION & MAINTENANCE/HOISTING - STANDARD PROCEDURE).

(2) Remove both front wheel and tire assemblies.

NOTE: Using this procedure, begin on one side of the vehicle.

(3) Remove the anti-rattle spring from the outboard side of the caliper and adapter (Fig. 4).

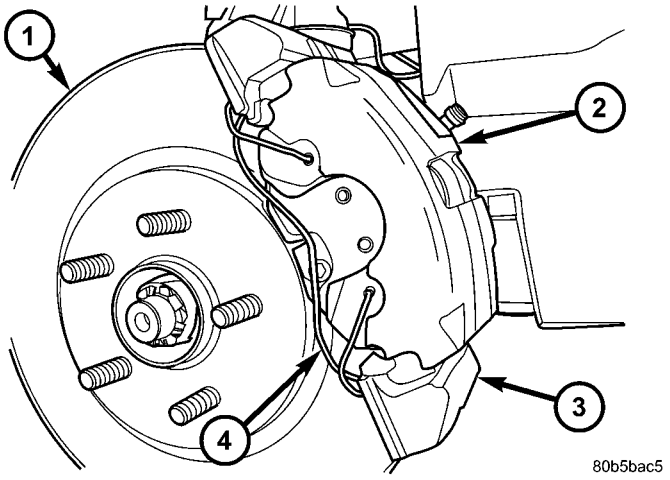

Fig. 4 FRONT DISC BRAKES

1 - BRAKE ROTOR
2 - BRAKE CALIPER
3 - BRAKE CALIPER ADAPTER
4 - ANTI-RATTLE SPRING

(4) Remove the two caps in place over the caliper guide pin bolts (Fig. 5).

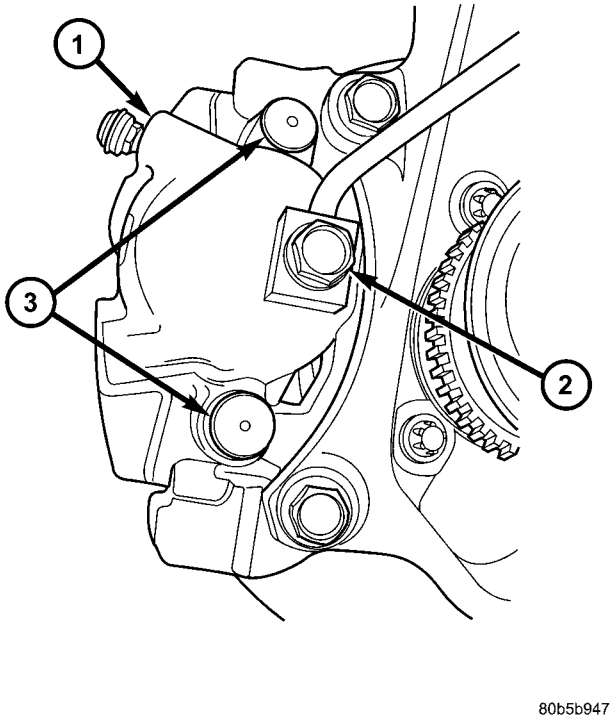

Fig. 5 CALIPER GUIDE PIN BOLT CAPS

1 - FRONT BRAKE CALIPER
2 - BRAKE HOSE BANJO BOLT
3 - CAPS

BRAKE PADS/SHOES - FRONT (Continued)

(5) Remove the two caliper guide pin bolts (Fig. 6).

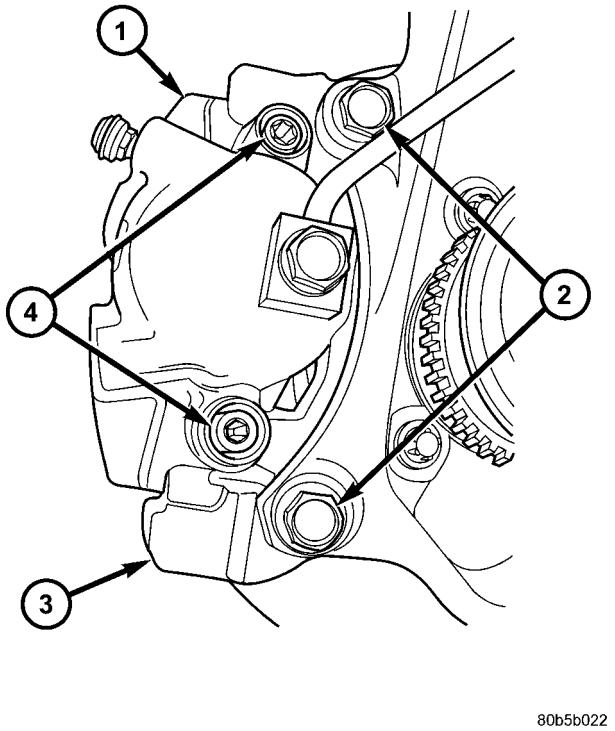

Fig. 6 CALIPER MOUNTING

1 - FRONT BRAKE CALIPER
2 - CALIPER ADAPTER MOUNTING BOLTS
3 - CALIPER ADAPTER
4 - CALIPER GUIDE PIN BOLTS

(6) Remove caliper from caliper adapter and brake rotor. The outboard shoe will probably stay with the caliper adapter while the inboard shoe will come off with the caliper as the caliper is removed.

CAUTION: Supporting weight of caliper by the flexible brake fluid hose can damage the hose.

(7) Using wire or cord, hang the caliper from the front strut assembly (Fig. 7). Support the caliper firmly to prevent weight of caliper from being supported by the brake fluid hose.

(8) Remove the outboard brake shoe from the caliper adapter.

(9) Pull the inboard brake shoe away from the caliper piston until the retaining clip on shoe is free from the cavity in the caliper piston (Fig. 8).

(10) Repeat the above procedure on other side of the vehicle.

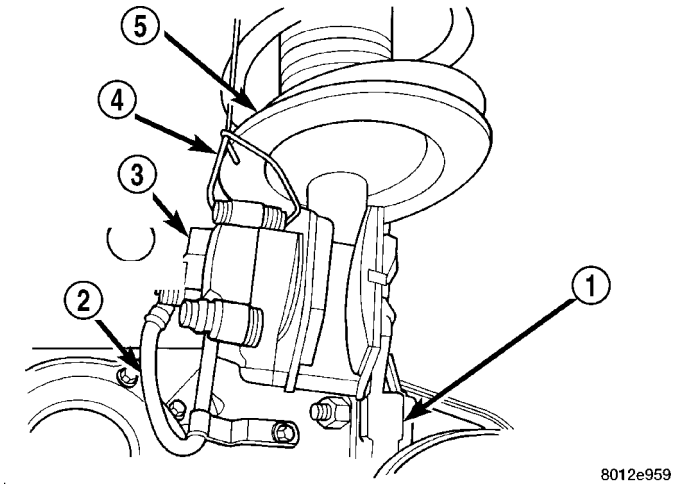

Fig. 7 Stored Front Disc Brake Caliper

1 - STEERING KNUCKLE
2 - BRAKE FLEX HOSE
3 - CALIPER ASSEMBLY
4 - WIRE HANGER
5 - STRUT ASSEMBLY

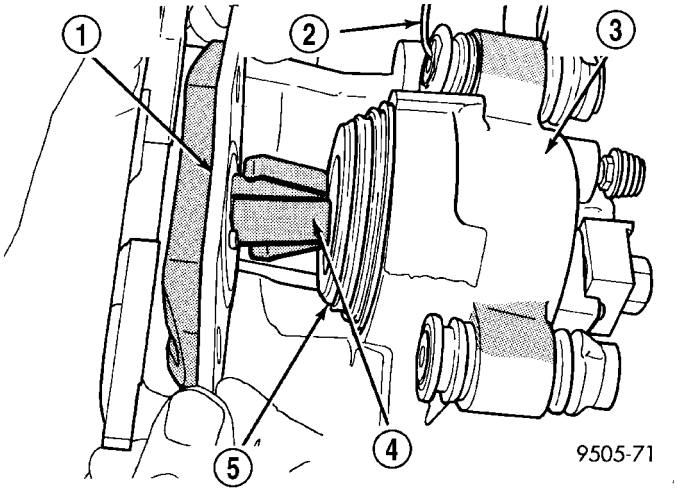

Fig. 8 Removing Inboard Shoe

1 - INBOARD BRAKE SHOE
2 - HANGER WIRE
3 - CALIPER ASSEMBLY
4 - RETAINING CLIP
5 - PISTON

BRAKE PADS/SHOES - FRONT (Continued)

CLEANING - DISC BRAKE SHOES

WARNING: DUST AND DIRT ACCUMULATING ON BRAKE PARTS DURING NORMAL USE MAY CONTAIN ASBESTOS FIBERS FROM PRODUCTION OR AFTERMARKET BRAKE LININGS. BREATHING EXCESSIVE CONCENTRATIONS OF ASBESTOS FIBERS CAN CAUSE SERIOUS BODILY HARM. EXERCISE CARE WHEN SERVICING BRAKE PARTS. DO NOT SAND OR GRIND BRAKE LINING UNLESS EQUIPMENT USED IS DESIGNED TO CONTAIN THE DUST RESIDUE. DO NOT CLEAN BRAKE PARTS WITH COMPRESSED AIR OR BY DRY BRUSHING. CLEANING SHOULD BE DONE BY DAMPENING THE BRAKE COMPONENTS WITH A FINE MIST OF WATER, THEN WIPING THE BRAKE COMPONENTS CLEAN WITH A DAMPENED CLOTH. DISPOSE OF CLOTH AND ALL RESIDUE CONTAINING ASBESTOS FIBERS IN AN IMPERMEABLE CONTAINER WITH THE APPROPRIATE LABEL. FOLLOW PRACTICES PRESCRIBED BY THE OCCUPATIONAL SAFETY AND HEALTH ADMINISTRATION (OSHA) AND THE ENVIRONMENTAL PROTECTION AGENCY (EPA) FOR THE HANDLING, PROCESSING, AND DISPOSING OF DUST OR DEBRIS THAT MAY CONTAIN ASBESTOS FIBERS.

INSPECTION - DISC BRAKE SHOES

Visually inspect brake shoes (pads) for uneven lining wear. Also inspect for excessive lining deterioration. Check the clearance between the tips of the wear indicators on the shoes (if equipped) and the brake rotors.

If a visual inspection does not adequately determine the condition of the lining, a physical check will be necessary. To check the amount of lining wear, remove the disc brake shoes from the calipers.

Measure each brake shoe. The combined brake shoe and its lining material thickness should be measured at its thinnest point.

- For front disc brake shoes, when a set of brake shoes are worn to a thickness of approximately 7.0 mm (9/32 inch), they should be replaced.
- For rear disc brake shoes, when a set of brake shoes are worn to a thickness of approximately 7.0 mm (9/32 inch), they should be replaced.
- Typically, if front shoes are worn out, both fronts and rears need to be replaced. Make sure to check rears.

Replace **both** disc brake shoes (inboard and outboard) on each caliper. It is necessary to replace the shoes on the opposite side of the vehicle as well as the shoes failing inspection.

If the brake shoe assemblies do not require replacement, be sure to reinstall the brake shoes in the original position they were remove from.

INSTALLATION - FRONT DISC BRAKE SHOES

NOTE: There may be more than 1 lining material released. Make sure proper linings are being installed.

(1) Begin on one side of the vehicle or the other.

(2) Completely retract the caliper piston back into its bore in the brake caliper (This is required for caliper installation on the brake rotor with new brake shoes installed).

(3) If applied, remove the protective paper from the noise suppression gasket on the rear of both the inner and outer brake shoe assemblies.

NOTE: Inboard brake shoes are stamped L or R for left or right side of the vehicle. The P-slot or void on piston insulator must be positioned upward when brake caliper is mounted (Fig. 9).

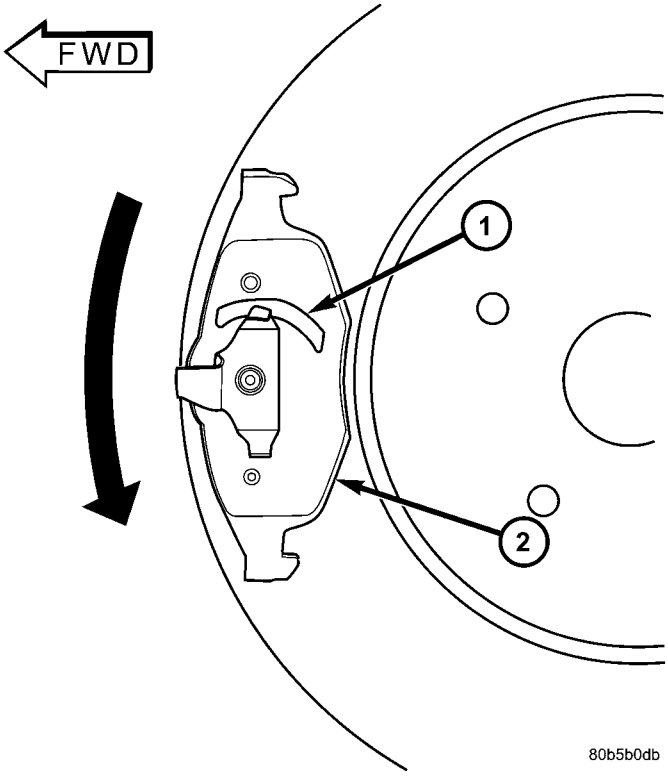

Fig. 9 INBOARD SHOE ORIENTATION TO TURNING ROTOR

1 - P-SLOT/VOID
2 - INBOARD DISC BRAKE SHOE/PAD

BRAKE PADS/SHOES - FRONT (Continued)

(4) Install the new inboard brake shoe into the caliper piston by firmly pressing its retaining clip into the piston bore. Be sure the inboard brake shoe is positioned squarely against the face of the caliper piston.

(5) Lubricate both adapter abutments where the shoes slide with a small amount of Mopar® Dielectric grease, or equivalent.

(6) Slide the new outboard brake shoe into the caliper adapter with the lining up against the outside of the brake rotor.

CAUTION: Use care when installing the caliper assembly onto the caliper adapter, so the caliper guide pin bushings do not get damaged by the adapter bosses.

(7) Carefully position the brake caliper over the brake rotor and adapter.

(8) Install the caliper guide pin bolts and tighten to a torque of 35 N·m (26 ft. lbs.). **Extreme caution should be taken not to cross thread the caliper guide pin bolts.**

(9) Install the caps over the caliper guide pin bolts (Fig. 5).

(10) Install the new caliper hold down spring (anti-rattle clip) on the outboard side of the caliper. Start the spring into the holes on the caliper, then stretch the clip legs past the abutments on the caliper adapter (Fig. 4).

(11) Repeat the above procedure on other side of the vehicle.

(12) Install the wheel and tire assemblies. Tighten the wheel mounting nuts in proper sequence until all nuts are torqued to half specification, then repeat the tightening sequence to the full specified torque of 135 N·m (100 ft. lbs.).

(13) Lower vehicle.

(14) Pump the brake pedal several times. This will set the shoes to the brake rotor.

(15) Check and adjust brake fluid level as necessary.

(16) Road test the vehicle and make several stops to wear off any foreign material on the brakes and to seat the brake shoes.

BRAKE PADS/SHOES - REAR DISC

REMOVAL - REAR DISC BRAKE SHOES

(1) Raise vehicle. (Refer to LUBRICATION & MAINTENANCE/HOISTING - STANDARD PROCEDURE)

(2) Remove rear wheels and tires from vehicle.

(3) Remove the 2 guide pin bolts mounting the caliper to the adapter (Fig. 10).

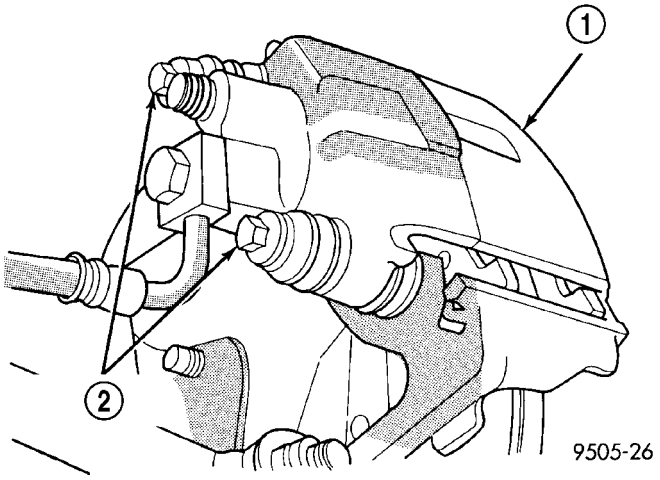

Fig. 10 Caliper Guide Pin Bolts

1 - DISC BRAKE CALIPER
2 - CALIPER GUIDE PIN BOLTS

(4) Remove caliper from adapter and rotor by first rotating the top of the caliper away from adapter, and then lifting the caliper off the lower machined abutment on adapter (Fig. 11).

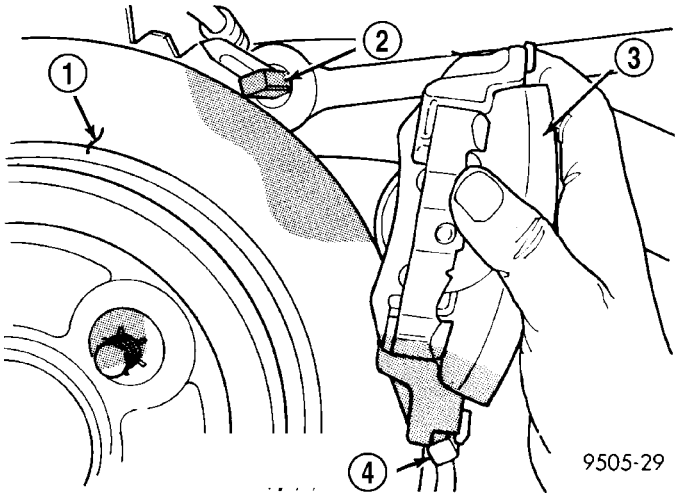

Fig. 11 Caliper Removal/Installation

1 - BRAKING DISC
2 - CALIPER ADAPTER
3 - CALIPER
4 - LOWER MACHINED ADAPTER ABUTMENT

BRAKE PADS/SHOES - REAR DISC (Continued)

(5) Support caliper from rear strut to prevent weight of caliper from damaging the flexible brake hose (Fig. 12).

(6) Remove rear rotor from hub/bearing (Fig. 13). Then inspect drum-in-hat parking brake shoes and parking brake braking surface on rotor for any signs of excessive wear or damage. Replace parking brake shoes if required.

(7) Remove outboard brake pad from caliper by prying brake pad retaining clip over raised area on caliper. Then slide brake pad down and off the caliper (Fig. 14).

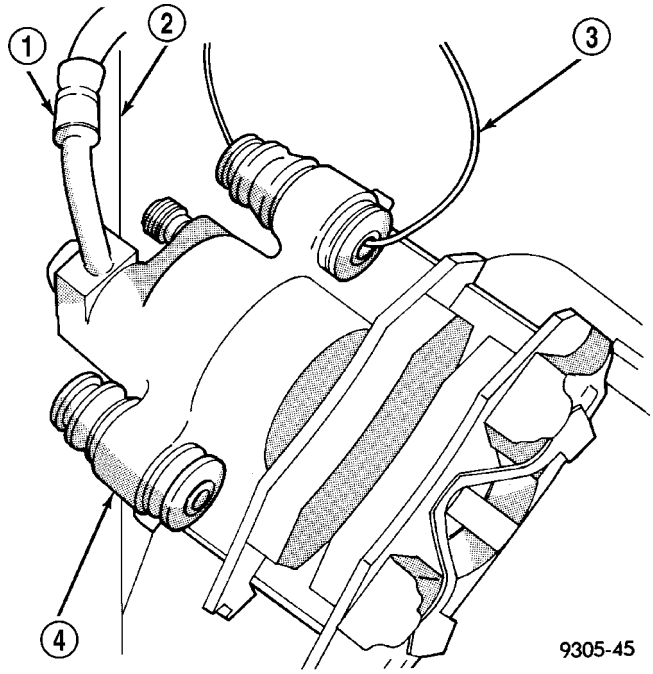

Fig. 12 Storing Caliper

1 - FLEX HOSE
2 - STRUT
3 - WIRE HANGER
4 - CALIPER ASSEMBLY

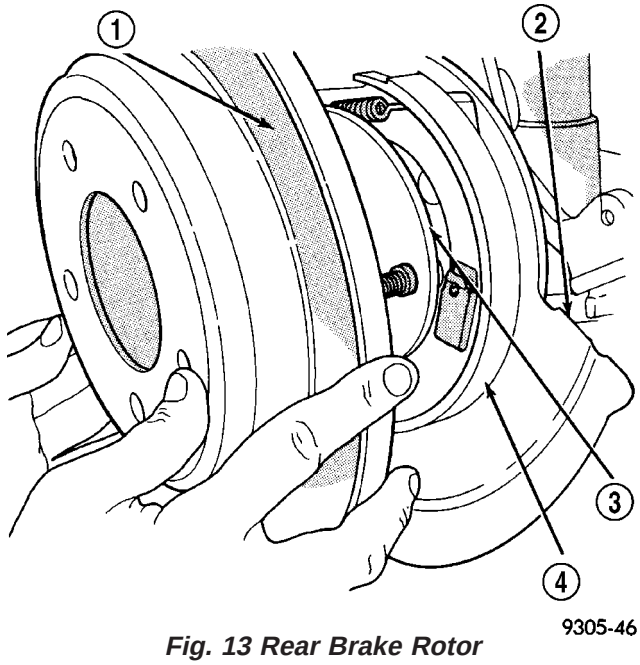

Fig. 13 Rear Brake Rotor

1 - BRAKING DISC
2 - DISC SHIELD
3 - HUB
4 - DRUM-IN-HAT PARKING BRAKE

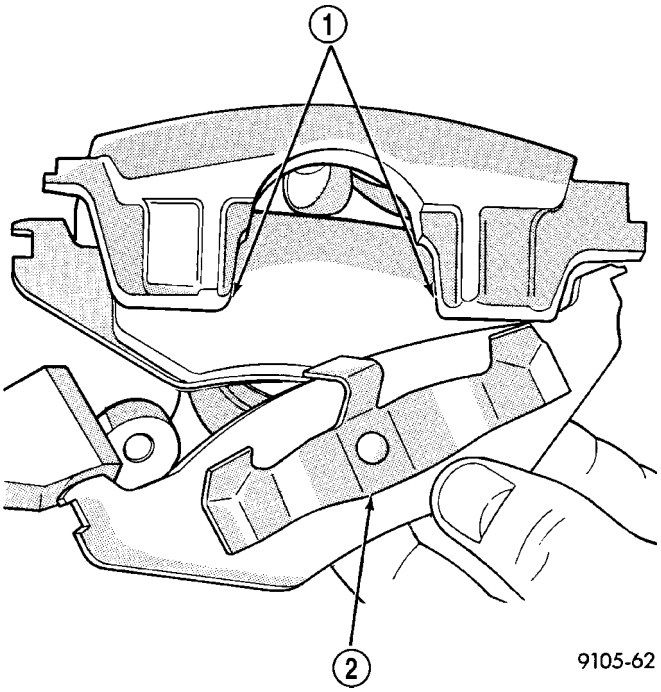

Fig. 14 Removing Outboard Brake Pad

1 - CALIPER FINGERS
2 - RETAINING CLIP

(8) Pull inboard brake pad away from caliper piston, until retaining clip is free from cavity in piston. (Fig. 15).

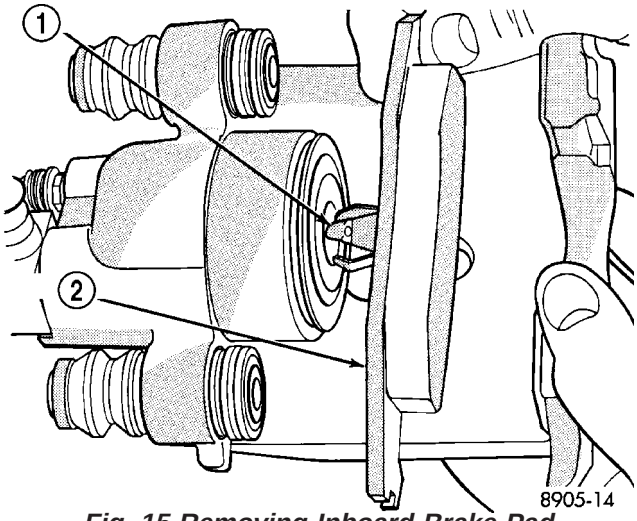

Fig. 15 Removing Inboard Brake Pad

1 - RETAINING CLIP
2 - INBOARD SHOE

BRAKE PADS/SHOES - REAR DISC (Continued)

CLEANING - DISC BRAKE SHOES

WARNING: DUST AND DIRT ACCUMULATING ON BRAKE PARTS DURING NORMAL USE MAY CONTAIN ASBESTOS FIBERS FROM PRODUCTION OR AFTERMARKET BRAKE LININGS. BREATHING EXCESSIVE CONCENTRATIONS OF ASBESTOS FIBERS CAN CAUSE SERIOUS BODILY HARM. EXERCISE CARE WHEN SERVICING BRAKE PARTS. DO NOT SAND OR GRIND BRAKE LINING UNLESS EQUIPMENT USED IS DESIGNED TO CONTAIN THE DUST RESIDUE. DO NOT CLEAN BRAKE PARTS WITH COMPRESSED AIR OR BY DRY BRUSHING. CLEANING SHOULD BE DONE BY DAMPENING THE BRAKE COMPONENTS WITH A FINE MIST OF WATER, THEN WIPING THE BRAKE COMPONENTS CLEAN WITH A DAMPENED CLOTH. DISPOSE OF CLOTH AND ALL RESIDUE CONTAINING ASBESTOS FIBERS IN AN IMPERMEABLE CONTAINER WITH THE APPROPRIATE LABEL. FOLLOW PRACTICES PRESCRIBED BY THE OCCUPATIONAL SAFETY AND HEALTH ADMINISTRATION (OSHA) AND THE ENVIRONMENTAL PROTECTION AGENCY (EPA) FOR THE HANDLING, PROCESSING, AND DISPOSING OF DUST OR DEBRIS THAT MAY CONTAIN ASBESTOS FIBERS.

INSPECTION - DISC BRAKE SHOES

Visually inspect brake shoes (pads) for uneven lining wear. Also inspect for excessive lining deterioration. Check the clearance between the tips of the wear indicators on the shoes (if equipped) and the brake rotors.

If a visual inspection does not adequately determine the condition of the lining, a physical check will be necessary. To check the amount of lining wear, remove the disc brake shoes from the calipers.

Measure each brake shoe. The combined brake shoe and its lining material thickness should be measured at its thinnest point.

- For front disc brake shoes, when a set of brake shoes are worn to a thickness of approximately 7.0 mm (9/32 inch), they should be replaced.
- For rear disc brake shoes, when a set of brake shoes are worn to a thickness of approximately 7.0 mm (9/32 inch), they should be replaced.
- Typically, if front shoes are worn out, both fronts and rears need to be replaced. Make sure to check rears.

Replace **both** disc brake shoes (inboard and outboard) on each caliper. It is necessary to replace the shoes on the opposite side of the vehicle as well as the shoes failing inspection.

If the brake shoe assemblies do not require replacement, be sure to reinstall the brake shoes in the original position they were remove from.

INSTALLATION - REAR DISC BRAKE SHOES

(1) Completely retract the caliper piston back into the piston bore of the caliper. This is required for caliper installation when new brake pad assemblies are installed on caliper.

(2) Lubricate both adapter abutments with a liberal amount of Mopar® Multipurpose Lubricant, or equivalent.

(3) Install rear rotor on hub making sure it is squarely seated on face of hub (Fig. 13).

(4) Remove protective paper from noise suppression gasket on both inner and outer brake pad assemblies (if equipped).

(5) Install new inboard brake pad into caliper piston by firmly pressing it into bore of piston using thumbs (Fig. 14). **Be sure inboard brake shoe is positioned squarely against face of piston.**

(6) Slide new outboard brake pad onto the caliper (Fig. 14). Be sure retaining clip is squarely seated in the depressed areas on the caliper.

CAUTION: Use care when installing caliper assembly onto adapter, so the guide pin bushings and sleeves do not get damaged by the mounting bosses on adapter.

(7) Carefully lower caliper and brake shoes over rotor reversing the required removal procedure (Fig. 11). Make sure that caliper guide pin bolts, bushings and sleeves are clear of the adapter bosses.

CAUTION: Extreme caution should be taken not to cross thread the caliper guide pin bolts when they are installed.

(8) Install caliper guide pin bolts into adapter. (Fig. 10). Tighten the guide pin bolts to a torque of 22 N·m (192 in. lbs.).

(9) Install the wheels and tires.

(10) Tighten the wheel mounting stud nuts in proper sequence until all nuts are torqued to half specification. Then repeat the tightening sequence to the full specified torque of 135 N·m (100 ft. lbs.).

(11) Lower vehicle.

(12) Check brake fluid level.

NOTE: Before vehicle is moved after any brake service work, pump the brake pedal several times to insure the vehicle has a firm brake pedal.

(13) Road test the vehicle and make several stops to wear off any foreign material on the brakes and to seat the brake pads.

BRAKE PADS/SHOES - REAR DRUM

REMOVAL

NOTE: Before proceeding, (Refer to 5 - BRAKES - WARNING)(Refer to 5 - BRAKES - CAUTION).

NOTE: Make sure parking brake is in “released” position before raising vehicle.

(1) Raise vehicle. (Refer to LUBRICATION & MAINTENANCE/HOISTING - STANDARD PROCEDURE)

(2) Remove both rear tire and wheel assemblies from vehicle.

(3) Remove brake drums from both sides of vehicle (Fig. 16). (Refer to 5 - BRAKES/HYDRAULIC/MECHANICAL/DRUM - REMOVAL)

NOTE: Perform Step 4 through Step 12 on each side of the vehicle to complete shoe set removal. It may be easier to install the new components on the first side of the vehicle before disassembling the opposite side, so it may be used as a reference guide for proper installation. (Refer to 5 - BRAKES/HYDRAULIC/MECHANICAL/BRAKE PADS/SHOES - REAR DRUM - INSTALLATION)

(4) Remove hub and bearing dust cap (Fig. 16).

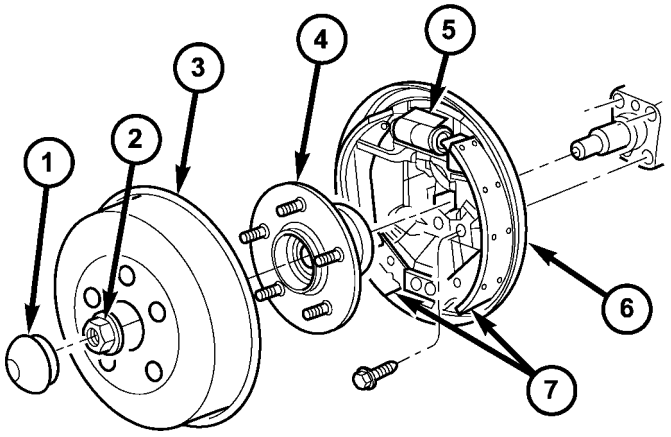

Fig. 16 Drum Brakes

1 - DUST CAP
2 - NUT
3 - DRUM
4 - HUB AND BEARING
5 - WHEEL CYLINDER
6 - SUPPORT PLATE
7 - BRAKE SHOES

(5) Remove hub and bearing retaining nut, then slide hub and bearing off spindle (Fig. 16).

(6) Compress cable return spring, then remove parking brake cable from parking brake lever (Fig. 17).

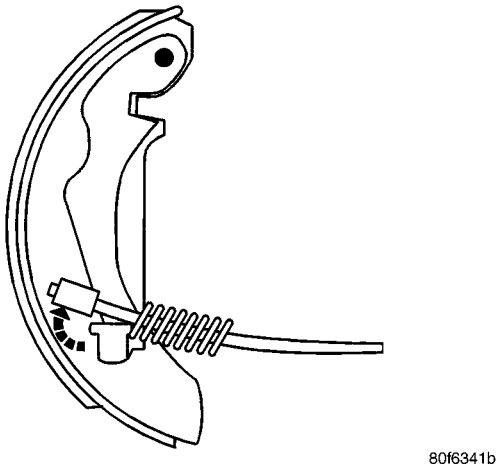

Fig. 17 Cable Removal From Lever

(7) Compress and remove shoe hold-down springs (Fig. 18).

(8) Remove lower return spring (Fig. 18).

(9) Remove both shoes and remaining parts as an assembly from support plate.

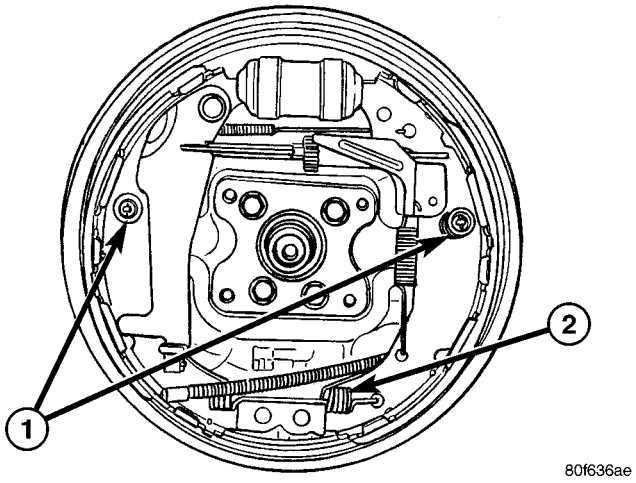

Fig. 18 Hold-Down And Lower Return Springs

1 - HOLD-DOWN SPRINGS
2 - LOWER RETURN SPRING

BRAKE PADS/SHOES - REAR DRUM (Continued)

(10) Remove adjuster spring from leading shoe and lever pawl (Fig. 19).

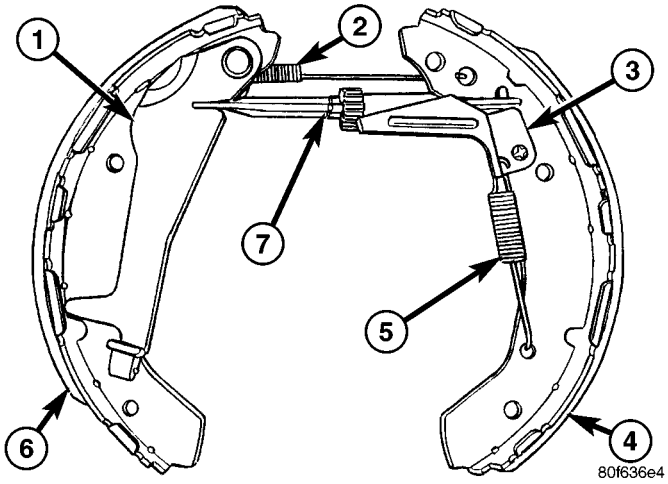

Fig. 19 Bench Assembled Brake Shoes (Right Side Shown)

1 - LEVER
2 - UPPER RETURN SPRING
3 - LEVER PAWL
4 - LEADING SHOE
5 - ADJUSTER SPRING
6 - TRAILING SHOE
7 - ADJUSTER

(11) Remove lever pawl from pivot on leading shoe and slide out from under adjuster.

(12) Remove adjuster and upper spring (Fig. 19).

CLEANING

WARNING: DUST AND DIRT ACCUMULATING ON BRAKE PARTS DURING NORMAL USE MAY CONTAIN ASBESTOS FIBERS FROM PRODUCTION OR AFTER-MARKET BRAKE LININGS. BREATHING EXCESSIVE CONCENTRATIONS OF ASBESTOS FIBERS CAN CAUSE SERIOUS BODILY HARM. EXERCISE CARE WHEN SERVICING BRAKE PARTS. DO NOT SAND OR GRIND BRAKE LINING UNLESS EQUIPMENT USED IS DESIGNED TO CONTAIN THE DUST RESIDUE. DO NOT CLEAN BRAKE PARTS WITH COMPRESSED AIR OR BY DRY BRUSHING. CLEANING SHOULD BE DONE BY DAMPENING THE BRAKE COMPONENTS WITH A FINE MIST OF WATER, THEN WIPING THE BRAKE COMPONENTS CLEAN WITH A DAMPENED CLOTH. DISPOSE OF CLOTH AND ALL RESIDUE CONTAINING ASBESTOS FIBERS IN AN IMPERMEABLE CONTAINER WITH THE APPROPRIATE LABEL. FOLLOW PRACTICES PRESCRIBED BY THE OCCUPATIONAL SAFETY AND HEALTH ADMINISTRATION (OSHA) AND THE ENVIRONMENTAL PROTECTION AGENCY (EPA) FOR THE HANDLING, PROCESSING, AND DISPOSING OF DUST OR DEBRIS THAT MAY CONTAIN ASBESTOS FIBERS.

INSPECTION

Rear brake shoe lining should show contact across the entire width of the lining and also from the heel to the toe of the lining. Replace the shoes if noted otherwise.

Brake shoes with lack of contact at the toe or heel of the brake shoe lining may be improperly ground.

Clean and inspect the brake support plate and shoe adjuster screw. Apply a thin coat of Mopar® Multi-Purpose Grease or equivalent to the threads of the self-adjuster. Replace the adjuster screw if it is corroded.

NOTE: Adjuster screws are different side-to-side. Left side adjuster screws have left-hand threads and right side adjuster screws have right-handed threads.

If the old brake shoe return or hold down springs have overheated or are damaged, replace them. Overheating indications are paint discoloration or distorted end coils.

INSTALLATION

NOTE: Perform Step 1 through Step 11 on each side of vehicle to complete shoe set installation, then proceed to Step 12.

(1) Lubricate six shoe contact areas on support plate and anchor using Mopar® Brake Lubricant or equivalent.

(2) Before installing shoes on vehicle, perform the following on the bench:

(a) Place one leading and one trailing shoe on bench (trailing shoe has parking brake lever attached to it).

(b) Install adjuster and upper spring (Fig. 19).

(c) Slide lever pawl under adjuster and onto pivot on leading shoe.

(d) Install adjuster spring between leading shoe and lever pawl (Fig. 19).

(3) Install pre-assembled brake shoe assembly on brake support plate (Fig. 18).

(4) Install lower return spring (Fig. 18).

(5) Install both shoe hold-down pins from rear, through support plate and shoes. Compress and install shoe hold-down springs on pins (Fig. 18).

(6) Compress parking brake cable return spring, then install cable on parking brake lever (Fig. 20). Release spring guiding it beneath retaining tab on lever.

(7) Insert cable into cable guide attached to anchor retaining plate.

(8) Slide hub and bearing onto spindle (Fig. 16). Install retaining nut and tighten to 250 N·m (185 ft. lbs.) torque.

BRAKE PADS/SHOES - REAR DRUM (Continued)

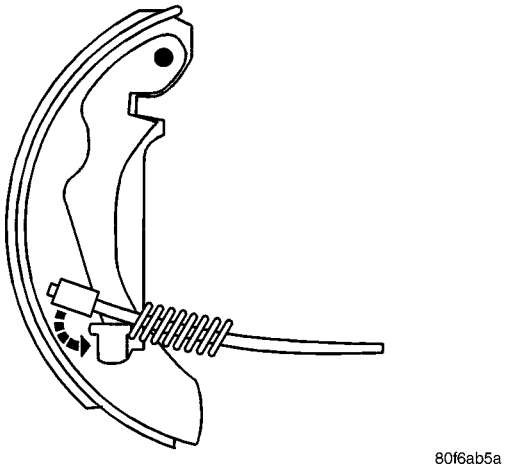

Fig. 20 Cable Installation To Lever

(9) Install hub and bearing dust cap (Fig. 16).

(10) Adjust brake shoes to drum diameter using brake shoe gauge. (Refer to 5 - BRAKES/HYDRAULIC/MECHANICAL/BRAKE PADS/SHOES - ADJUSTMENTS)

(11) Install brake drum (Fig. 16).

(12) Install both tire and wheel assemblies. Tighten wheel mounting nuts to 135 N·m (100 ft. lbs.) torque.

(13) Slowly rotate wheels and verify that brake drum **lightly** drags on shoes.

(14) Lower vehicle.

(15) Road test vehicle stopping in both forward and reverse directions. Automatic-adjuster will continue to adjust brakes as necessary during road test.

ADJUSTMENTS

ADJUSTMENT - DRUM BRAKE SHOES

NOTE: Before proceeding, (Refer to 5 - BRAKES - WARNING)(Refer to 5 - BRAKES - CAUTION).

(1) Verify the parking brake lever is in the fully released position.

(2) Raise the vehicle. (Refer to LUBRICATION & MAINTENANCE/HOISTING - STANDARD PROCEDURE)

NOTE: Perform the following steps on each rear drum brake assembly.

(3) Remove the tire and wheel assembly from the vehicle.

(4) Remove the brake drum. (Refer to 5 - BRAKES/HYDRAULIC/MECHANICAL/DRUM - REMOVAL)

(5) Using a brake shoe gauge, Special Tool C-3919 or equivalent, measure the inside diameter of the brake drum (Fig. 21). Tighten the gauge set-screw at this measurement.

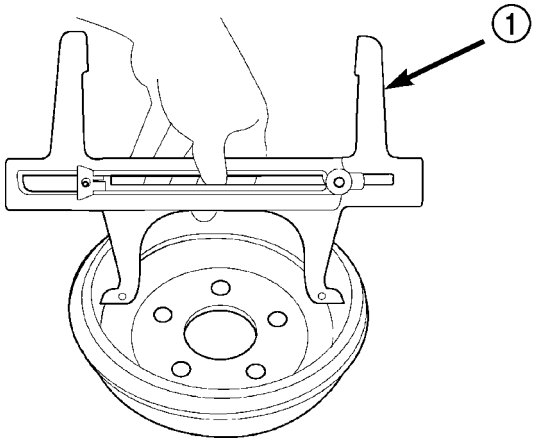

Fig. 21 Brake Drum Measurement

1 - BRAKE SHOE GAUGE

(6) Place the other side of the brake shoe gauge on the brake shoes as shown (Fig. 22).

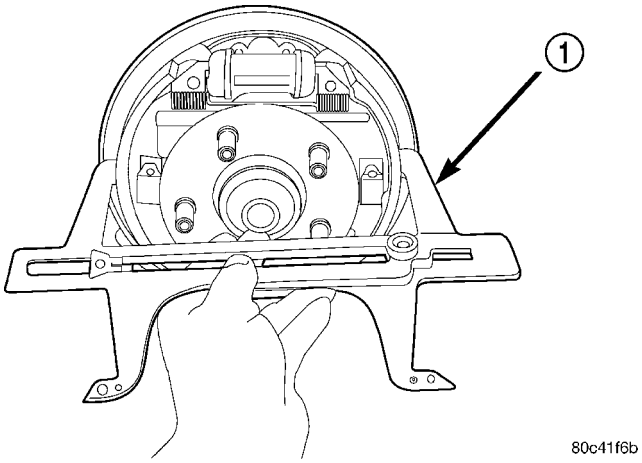

Fig. 22 Brake Shoe Measurement

1 - BRAKE SHOE GAUGE

(7) Adjust the shoe diameter to the setting on the gauge. To adjust the shoe diameter, turn the adjuster-screw star-wheel using a screwdriver inserted through the adjusting hole in the rear of the shoe support plate. Once the tip of the screwdriver contacts the star-wheel teeth, move the handle of tool downward using the support plate as a pivot to adjust the shoes outward.

(8) Once the shoe diameter is set, reinstall the brake drum.

(9) Turn the drum. A slight drag should be felt while rotating the drum.

(10) Install the tire and wheel assembly. Tighten the wheel mounting nuts to a torque of 135 N·m (100 ft. lbs.).

(11) After adjusting both rear drum brakes, lower the vehicle.

BRAKE PADS/SHOES - REAR DRUM (Continued)

(12) Apply and release the parking brake lever one time after the adjustment process is completed so the parking brakes can readjust themselves to the new brake shoe adjustment.

(13) Road test vehicle stopping in both forward and reverse directions. Automatic-adjuster will continue to adjust brakes as necessary during road test.

DISC BRAKE CALIPER - FRONT

REMOVAL - FRONT DISC BRAKE CALIPER

(1) Depress the brake pedal past its first inch of travel and hold it in this position using a brake pedal depressor (holding) tool. This is done to isolate the master cylinder from the brake hydraulic system disallowing the brake fluid to completely drain out of the brake fluid reservoir.

(2) Raise the vehicle. (Refer to LUBRICATION & MAINTENANCE/HOISTING - STANDARD PROCEDURE).

(3) Remove front wheel and tire assembly.

(4) Remove the anti-rattle spring from the outboard side of the caliper and adapter (Fig. 23).

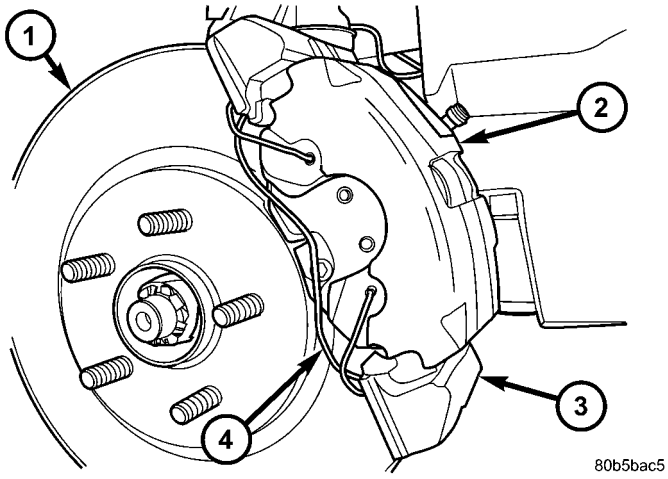

Fig. 23 FRONT DISC BRAKES

1 - BRAKE ROTOR
2 - BRAKE CALIPER
3 - BRAKE CALIPER ADAPTER
4 - ANTI-RATTLE SPRING

(5) Remove the banjo bolt connecting the brake hose to the brake caliper (Fig. 24). There are two washers (one on each side of the brake hose fitting) that will come off with the banjo bolt. Discard these washers.

(6) Remove the two caps in place over the caliper guide pin bolts (Fig. 24).

(7) Remove the two caliper guide pin bolts (Fig. 25).

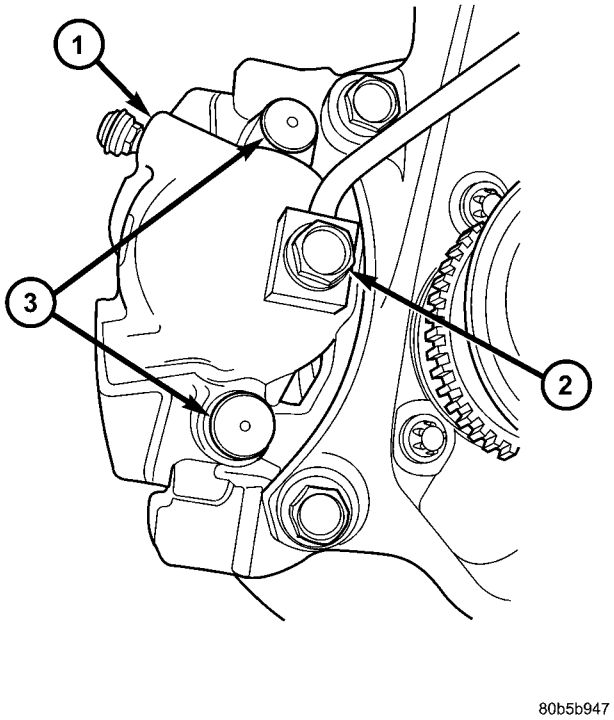

Fig. 24 CALIPER GUIDE PIN BOLT CAPS

1 - FRONT BRAKE CALIPER
2 - BRAKE HOSE BANJO BOLT
3 - CAPS

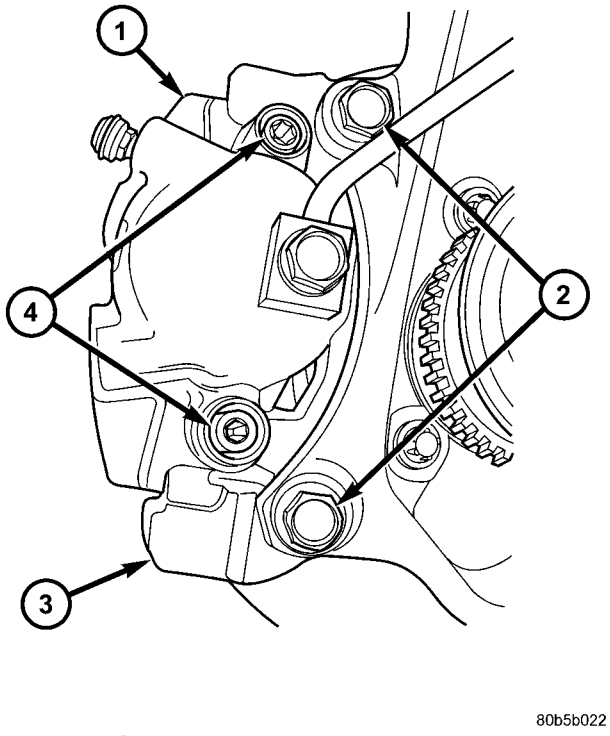

Fig. 25 CALIPER MOUNTING

1 - FRONT BRAKE CALIPER
2 - CALIPER ADAPTER MOUNTING BOLTS
3 - CALIPER ADAPTER
4 - CALIPER GUIDE PIN BOLTS

DISC BRAKE CALIPER - FRONT (Continued)

(8) Remove caliper from caliper adapter and brake rotor. The outboard shoe will probably stay with the caliper adapter while the inboard shoe will come off with the caliper as the caliper is removed.

DISASSEMBLY

DISASSEMBLY - CALIPER GUIDE PIN BUSHINGS (DISC/DISC BRAKES)

Before disassembling the brake caliper, clean and inspect it. Refer to CLEANING or INSPECTION in this section.

(1) Using your fingers, collapse one side of the rubber guide pin bushing. Pull the guide pin bushing out the other side of the brake caliper mounting boss.

(2) Repeat this procedure on the remaining bushing.

DISASSEMBLY - CALIPER PISTON AND SEAL

WARNING: UNDER NO CONDITION SHOULD HIGH PRESSURE AIR EVER BE USED TO REMOVE A PISTON FROM A CALIPER BORE. PERSONAL INJURY COULD RESULT FROM SUCH A PRACTICE.

NOTE: Before disassembling the brake caliper, clean and inspect it. Refer to CLEANING AND INSPECTION in this section.

NOTE: The safest way to remove the piston from the caliper bore is to use the hydraulic pressure of the vehicle's brake system.

(1) Following the removal procedure in DISC BRAKE SHOES found in this section, remove the caliper from the brake rotor and hang the assembly on a wire hook away from rotor and body of the vehicle so brake fluid cannot get on these components. Remove the brake shoes, and place a small piece of wood between the piston and caliper fingers.

(2) Carefully depress the brake pedal to hydraulically push piston out of its bore. Once completed, apply and hold down the brake pedal to any position beyond the first inch of pedal travel using a brake pedal holding tool. This will prevent the fluid in the master cylinder reservoir from completely draining out.

(3) Disconnect the brake fluid flex hose from the caliper assembly and remove it from the vehicle.

CAUTION: Do not use excessive force when clamping caliper in vise. Excessive vise pressure will cause bore distortion.

(4) Mount the caliper in a vise equipped with protective jaws.

(5) Remove the piston dust boot from the caliper and discard (Fig. 26).

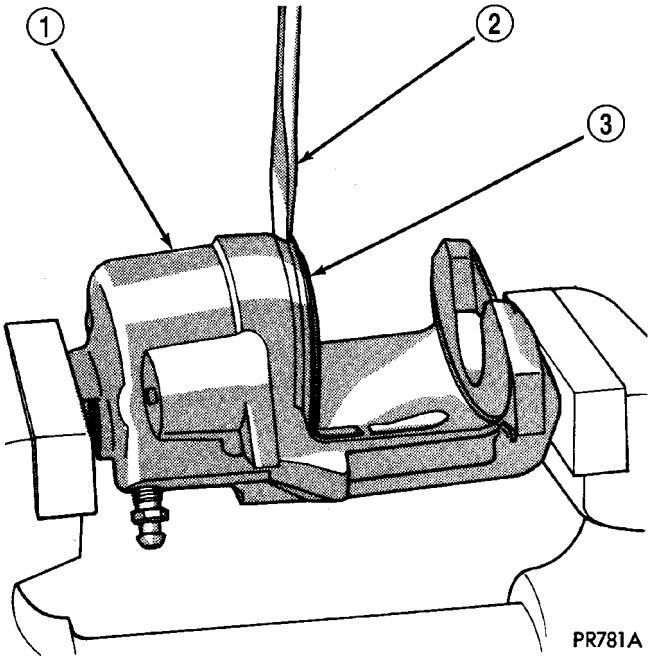

Fig. 26 Removing Caliper/Piston Dust Boot

1 - CALIPER
2 - SCREWDRIVER
3 - BOOT

NOTE: Do not use a screw driver or other metal tool for seal removal. Using such tools can scratch the bore or leave burrs on the seal groove edges.

(6) Using a soft tool such as a plastic trim stick, work the piston seal out of its groove in caliper piston bore (Fig. 27). Discard the old seal.

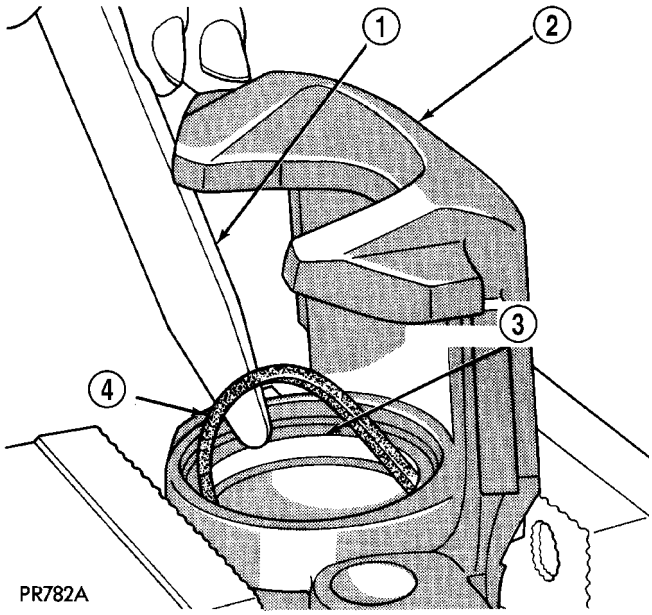

Fig. 27 Removing Piston Seal

1 - PLASTIC TRIM STICK
2 - CALIPER
3 - PISTON SEAL GROOVE
4 - PISTON SEAL

DISC BRAKE CALIPER - FRONT (Continued)

(7) Clean the piston bore and drilled passage ways using alcohol or a suitable solvent. Wipe it dry using only a lint-free cloth.

(8) Inspect the piston bore for scoring or pitting. Bores that show light scratches or corrosion can usually be cleared of the light scratches or corrosion using crocus cloth.

CLEANING - CALIPER

WARNING: DUST AND DIRT ACCUMULATING ON BRAKE PARTS DURING NORMAL USE MAY CONTAIN ASBESTOS FIBERS FROM PRODUCTION OR AFTERMARKET BRAKE LININGS. BREATHING EXCESSIVE CONCENTRATIONS OF ASBESTOS FIBERS CAN CAUSE SERIOUS BODILY HARM. EXERCISE CARE WHEN SERVICING BRAKE PARTS. DO NOT SAND OR GRIND BRAKE LINING UNLESS EQUIPMENT USED IS DESIGNED TO CONTAIN THE DUST RESIDUE. DO NOT CLEAN BRAKE PARTS WITH COMPRESSED AIR OR BY DRY BRUSHING. CLEANING SHOULD BE DONE BY DAMPENING THE BRAKE COMPONENTS WITH A FINE MIST OF WATER, THEN WIPING THE BRAKE COMPONENTS CLEAN WITH A DAMPENED CLOTH. DISPOSE OF CLOTH AND ALL RESIDUE CONTAINING ASBESTOS FIBERS IN AN IMPERMEABLE CONTAINER WITH THE APPROPRIATE LABEL. FOLLOW PRACTICES PRESCRIBED BY THE OCCUPATIONAL SAFETY AND HEALTH ADMINISTRATION (OSHA) AND THE ENVIRONMENTAL PROTECTION AGENCY (EPA) FOR THE HANDLING, PROCESSING, AND DISPOSING OF DUST OR DEBRIS THAT MAY CONTAIN ASBESTOS FIBERS.

To clean or flush the internal passages of the brake caliper, use fresh brake fluid or Mopar® Non-Chlorinated Brake Parts Cleaner. Never use gasoline, kerosene, alcohol, oil, transmission fluid or any fluid containing mineral oil to clean the caliper. These fluids will damage rubber cups and seals.

INSPECTION - CALIPER

Inspect the disc brake caliper for the following:

- Brake fluid leaks in and around boot area and inboard lining
- Ruptures, brittleness or damage to the piston dust boot
- Damaged, dry or brittle guide pin dust boots

If caliper fails inspection, disassemble and recondition caliper, replacing the seals and dust boots.

ASSEMBLY

ASSEMBLY - CALIPER GUIDE PIN BUSHINGS (DISC/DISC BRAKES)

(1) Fold the guide pin bushing in half lengthwise.

NOTE: To avoid damage to the bushing, do not use a sharp object to install the guide pin bushing.

(2) Insert the folded bushing into the caliper mounting boss using your fingers from the rear of the caliper.

(3) Unfold the bushing using your fingers or a wooden dowel until the bushing is fully seated into the caliper housing. The bushing flanges should be seated evenly on both sides of the bushing hole.

(4) Lubricate inside surfaces of bushing using Mopar® Dielectric Grease or equivalent.

(5) Repeat the procedure for remaining bushing.

ASSEMBLY - CALIPER PISTON AND SEAL

NOTE: Never use an old piston seal.

(1) Dip the new piston seal in clean brake fluid and install it in the groove of the caliper bore. The seal should be started at one area of the groove and gently worked around and into the groove (Fig. 28)using only your clean fingers to seat it.

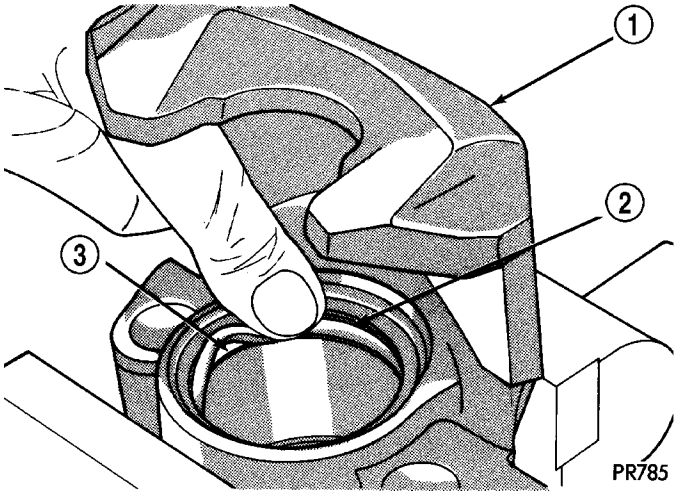

Fig. 28 Installing New Piston Seal

1 - CALIPER
2 - PISTON SEAL
3 - SEAL GROOVE

(2) Coat the new piston boot with clean brake fluid leaving a generous amount inside the boot.

(3) Position the dust boot over the piston after coating it with brake fluid.

DISC BRAKE CALIPER - FRONT (Continued)

CAUTION: Force applied to the piston to seat it in the bore must be applied uniformly to avoid cocking and binding of the piston.

(4) Install piston into caliper bore pushing it past the piston seal until it bottoms in the caliper bore (Fig. 29).

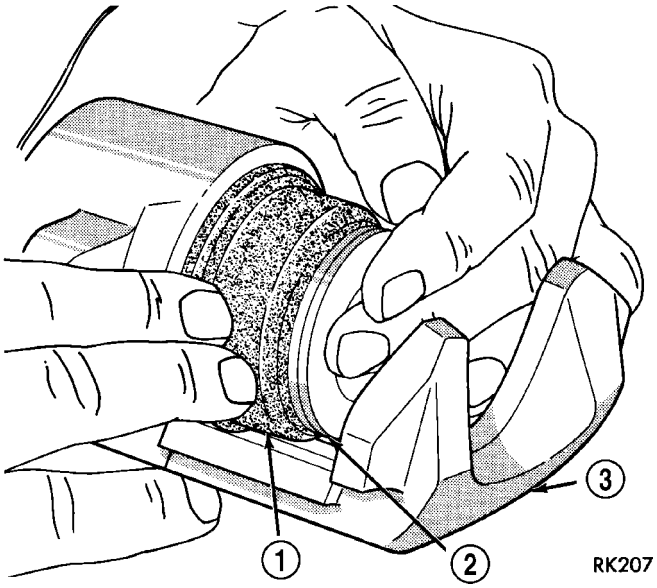

Fig. 29 Installing Piston Into Caliper Bore

1 - BOOT
2 - PISTON
3 - CALIPER

(5) Position the dust boot into the counterbore of the caliper assembly piston bore.

(6) Using a hammer and Installer, Special Tool C-4689 or C-4842 (depending on piston size), and Handle, Special Tool C-4171, drive the boot into the counterbore of the caliper as necessary (Fig. 30).

(7) Reinstall the caliper on the vehicle and bleed the brakes as necessary. Refer to Installation in this section.

INSTALLATION - FRONT DISC BRAKE CALIPER

(1) Completely retract the caliper piston back into piston bore of the caliper.

(2) Lubricate both caliper adapter abutments where the shoes slide with a sufficient amount of Mopar® Dielectric Grease, or equivalent.

NOTE: If shoes are being tranferred or newly installed, make note that the inboard brake shoes are stamped L or R for left or right side of the vehicle. The P-slot or void on piston insulator must be positioned upward when brake caliper is mounted (Fig. 31).

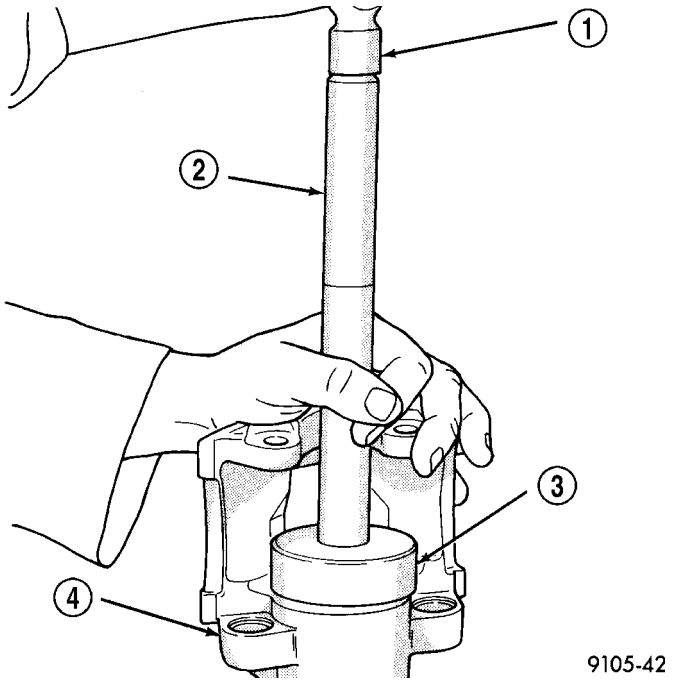

Fig. 30 Installing Dust Boot

1 - HAMMER
2 - SPECIAL TOOL C-4171
3 - SPECIAL TOOL C-4689 or C-4842
4 - CALIPER

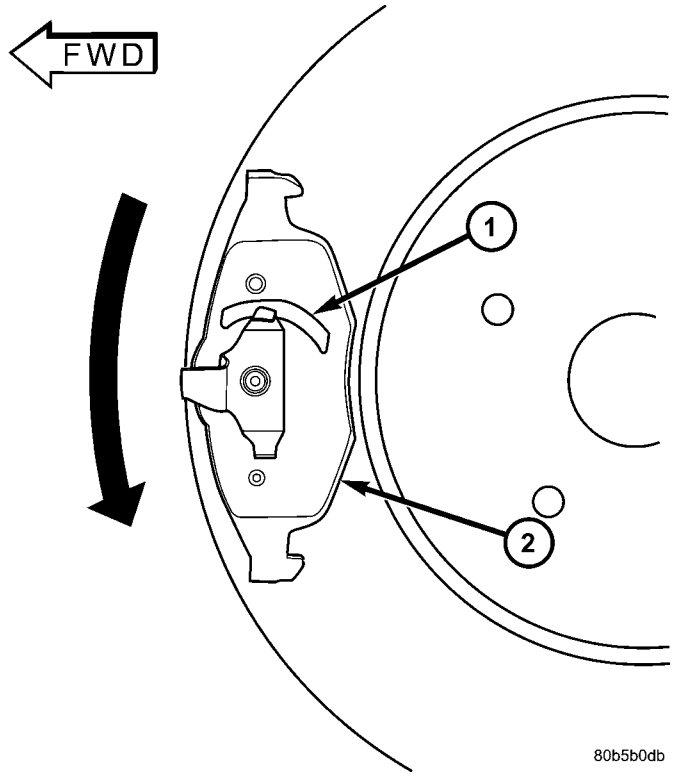

Fig. 31 INBOARD SHOE ORIENTATION TO TURNING ROTOR

1 - P-SLOT/VOID
2 - INBOARD DISC BRAKE SHOE/PAD

DISC BRAKE CALIPER - FRONT (Continued)

CAUTION: Use care when installing the brake caliper assembly onto the adapter, so that the seals on the caliper guide pin bushings do not get damaged by the adapter bosses.

(3) Carefully position the brake caliper (with inboard shoe) over the brake rotor, outboard shoe and adapter. For proper positioning of shoes when installing caliper, (Refer to 5 - BRAKES/HYDRAULIC/MECHANICAL/ BRAKE PADS/SHOES - INSTALLATION).

(4) Install the caliper guide pin bolts and tighten to a torque of 35 N·m (26 ft. lbs.) (Fig. 25). **Extreme caution should be taken not to cross thread the caliper guide pin bolts.**

(5) Install the caps over the ends of the guide pin bolts (Fig. 24).

(6) Install the anti-rattle spring on the outboard side of the caliper (Fig. 23). Start the clip into the holes on the caliper, then stretch the clip legs past the abutments on the caliper adapter.

CAUTION: When connecting the brake hose to the caliper, install new brake hose to caliper special washers.

(7) Install the brake hose on the caliper. To do this, first place one NEW special fitting washer on each side of the hose fitting, then slide the banjo bolt through the fitting. Next, thread the banjo bolt into the threaded port on the rear of the brake caliper (Fig. 24). Tighten the banjo bolt to a torque of 35 N·m (26 ft. lbs.).

(8) Install the wheel and tire assembly. Tighten the wheel mounting stud nuts in proper sequence until all nuts are torqued to half specification, then repeat the tightening sequence to the full specified torque of 135 N·m (100 ft. lbs.).

(9) Lower the vehicle.

(10) Remove the brake pedal depressor (holding) tool.

(11) Bleed the hydraulic brake circuit to the brake caliper. (Refer to 5 - BRAKES - STANDARD PROCEDURE)

(12) Road test the vehicle and make several stops to wear off any foreign material on the brakes and to seat the brake shoe linings.

DISC BRAKE CALIPER - REAR

REMOVAL - REAR DISC BRAKE CALIPER

(1) Depress the brake pedal past its first inch of travel and hold it in this position using a brake pedal depressor (holding) tool. This is done to isolate the master cylinder from the brake hydraulic system disallowing the brake fluid to completely drain out of the brake fluid reservoir.

(2) Raise vehicle. (Refer to LUBRICATION & MAINTENANCE/HOISTING - STANDARD PROCEDURE)

(3) Remove rear wheel and tire from vehicle.

(4) Remove the banjo bolt connecting the brake hose to the brake caliper. There are two washers (one on each side of the brake hose fitting) that will come off with the banjo bolt. Discard these washers.

(5) Remove the 2 guide pin bolts mounting the caliper to the adapter (Fig. 32).

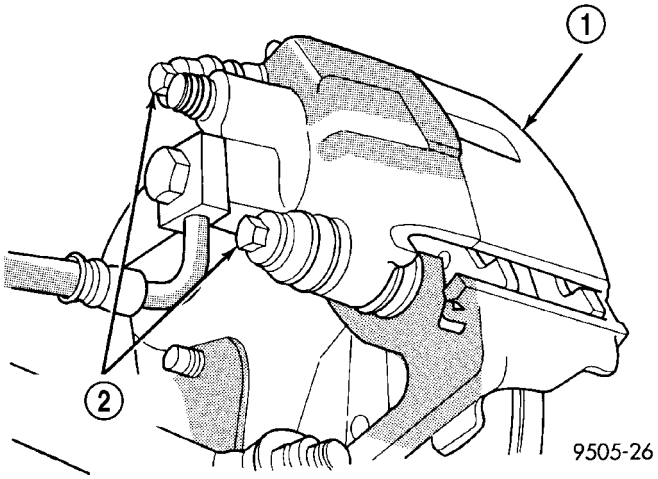

Fig. 32 Caliper Guide Pin Bolts

1 - DISC BRAKE CALIPER
2 - CALIPER GUIDE PIN BOLTS

(6) Remove caliper from adapter and rotor by first rotating top of caliper away from the adapter, then lifting the caliper off lower machined abutment on adapter (Fig. 33).

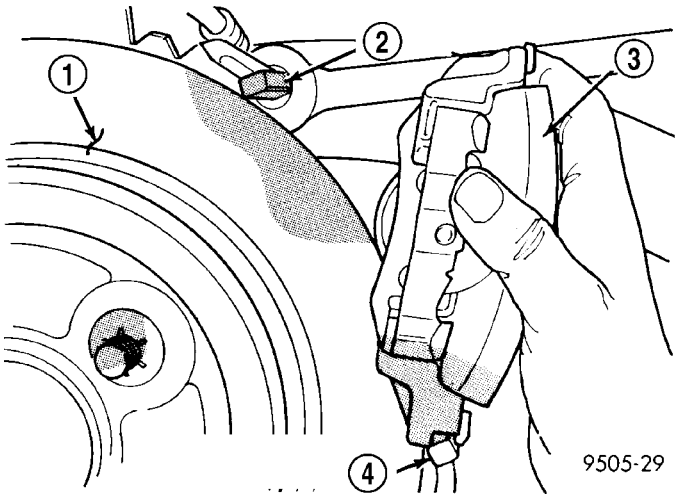

Fig. 33 Removing Caliper From Adapter

1 - BRAKING DISC
2 - CALIPER ADAPTER
3 - CALIPER
4 - LOWER MACHINED ADAPTER ABUTMENT

DISC BRAKE CALIPER - REAR (Continued)

DISASSEMBLY

DISASSEMBLY - CALIPER GUIDE PIN BUSHINGS (DISC/DISC BRAKES)

Before disassembling the brake caliper, clean and inspect it. Refer to CLEANING or INSPECTION in this section.

(1) Using your fingers, collapse one side of the rubber guide pin bushing. Pull the guide pin bushing out the other side of the brake caliper mounting boss.

(2) Repeat this procedure on the remaining bushing.

DISASSEMBLY - CALIPER PISTON AND SEAL

WARNING: UNDER NO CONDITION SHOULD HIGH PRESSURE AIR EVER BE USED TO REMOVE A PISTON FROM A CALIPER BORE. PERSONAL INJURY COULD RESULT FROM SUCH A PRACTICE.

NOTE: Before disassembling the brake caliper, clean and inspect it. Refer to CLEANING AND INSPECTION in this section.

NOTE: The safest way to remove the piston from the caliper bore is to use the hydraulic pressure of the vehicle's brake system.

(1) Following the removal procedure in DISC BRAKE SHOES found in this section, remove the caliper from the brake rotor and hang the assembly on a wire hook away from rotor and body of the vehicle so brake fluid cannot get on these components. Remove the brake shoes, and place a small piece of wood between the piston and caliper fingers.

(2) Carefully depress the brake pedal to hydraulically push piston out of its bore. Once completed, apply and hold down the brake pedal to any position beyond the first inch of pedal travel using a brake pedal holding tool. This will prevent the fluid in the master cylinder reservoir from completely draining out.

(3) Disconnect the brake fluid flex hose from the caliper assembly and remove it from the vehicle.

CAUTION: Do not use excessive force when clamping caliper in vise. Excessive vise pressure will cause bore distortion.

(4) Mount the caliper in a vise equipped with protective jaws.

(5) Remove the piston dust boot from the caliper and discard (Fig. 34).

NOTE: Do not use a screw driver or other metal tool for seal removal. Using such tools can scratch the bore or leave burrs on the seal groove edges.

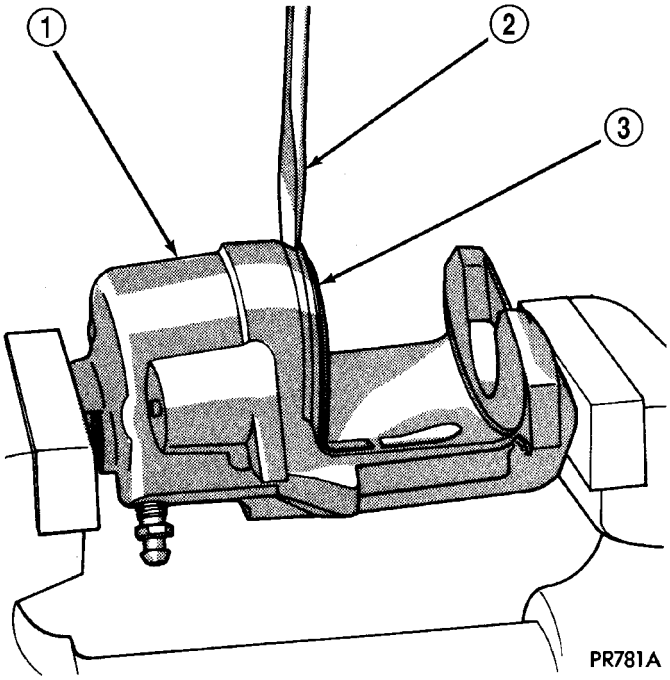

Fig. 34 Removing Caliper/Piston Dust Boot

1 - CALIPER
2 - SCREWDRIVER
3 - BOOT

(6) Using a soft tool such as a plastic trim stick, work the piston seal out of its groove in caliper piston bore (Fig. 35). Discard the old seal.

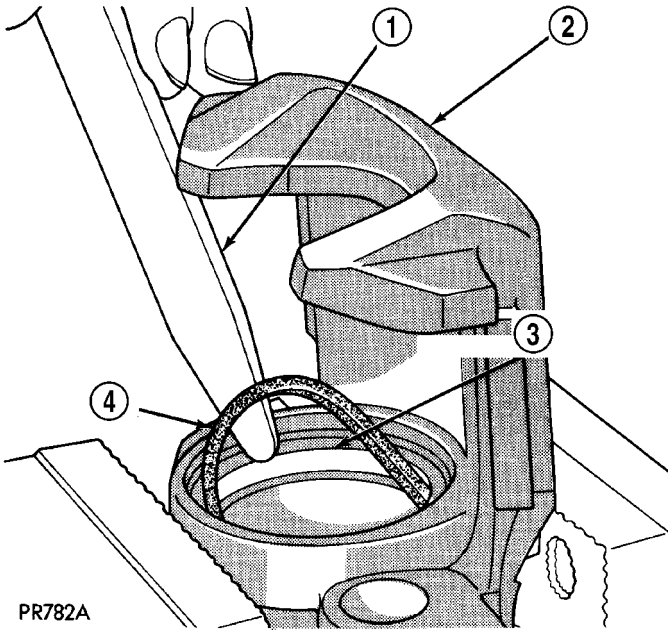

Fig. 35 Removing Piston Seal

1 - PLASTIC TRIM STICK
2 - CALIPER
3 - PISTON SEAL GROOVE
4 - PISTON SEAL

DISC BRAKE CALIPER - REAR (Continued)

(7) Clean the piston bore and drilled passage ways using alcohol or a suitable solvent. Wipe it dry using only a lint-free cloth.

(8) Inspect the piston bore for scoring or pitting. Bores that show light scratches or corrosion can usually be cleared of the light scratches or corrosion using crocus cloth.

CLEANING - CALIPER

WARNING: DUST AND DIRT ACCUMULATING ON BRAKE PARTS DURING NORMAL USE MAY CONTAIN ASBESTOS FIBERS FROM PRODUCTION OR AFTERMARKET BRAKE LININGS. BREATHING EXCESSIVE CONCENTRATIONS OF ASBESTOS FIBERS CAN CAUSE SERIOUS BODILY HARM. EXERCISE CARE WHEN SERVICING BRAKE PARTS. DO NOT SAND OR GRIND BRAKE LINING UNLESS EQUIPMENT USED IS DESIGNED TO CONTAIN THE DUST RESIDUE. DO NOT CLEAN BRAKE PARTS WITH COMPRESSED AIR OR BY DRY BRUSHING. CLEANING SHOULD BE DONE BY DAMPENING THE BRAKE COMPONENTS WITH A FINE MIST OF WATER, THEN WIPING THE BRAKE COMPONENTS CLEAN WITH A DAMPENED CLOTH. DISPOSE OF CLOTH AND ALL RESIDUE CONTAINING ASBESTOS FIBERS IN AN IMPERMEABLE CONTAINER WITH THE APPROPRIATE LABEL. FOLLOW PRACTICES PRESCRIBED BY THE OCCUPATIONAL SAFETY AND HEALTH ADMINISTRATION (OSHA) AND THE ENVIRONMENTAL PROTECTION AGENCY (EPA) FOR THE HANDLING, PROCESSING, AND DISPOSING OF DUST OR DEBRIS THAT MAY CONTAIN ASBESTOS FIBERS.

To clean or flush the internal passages of the brake caliper, use fresh brake fluid or Mopar® Non-Chlorinated Brake Parts Cleaner. Never use gasoline, kerosene, alcohol, oil, transmission fluid or any fluid containing mineral oil to clean the caliper. These fluids will damage rubber cups and seals.

INSPECTION - CALIPER

Inspect the disc brake caliper for the following:

- Brake fluid leaks in and around boot area and inboard lining
- Ruptures, brittleness or damage to the piston dust boot
- Damaged, dry or brittle guide pin dust boots

If caliper fails inspection, disassemble and recondition caliper, replacing the seals and dust boots.

ASSEMBLY

ASSEMBLY - CALIPER GUIDE PIN BUSHINGS (DISC/DISC BRAKES)

(1) Fold the guide pin bushing in half lengthwise.

NOTE: To avoid damage to the bushing, do not use a sharp object to install the guide pin bushing.

(2) Insert the folded bushing into the caliper mounting boss using your fingers from the rear of the caliper.

(3) Unfold the bushing using your fingers or a wooden dowel until the bushing is fully seated into the caliper housing. The bushing flanges should be seated evenly on both sides of the bushing hole.

(4) Lubricate inside surfaces of bushing using Mopar® Dielectric Grease or equivalent.

(5) Repeat the procedure for remaining bushing.

ASSEMBLY - CALIPER PISTON AND SEAL

NOTE: Never use an old piston seal.

(1) Dip the new piston seal in clean brake fluid and install it in the groove of the caliper bore. The seal should be started at one area of the groove and gently worked around and into the groove (Fig. 36)using only your clean fingers to seat it.

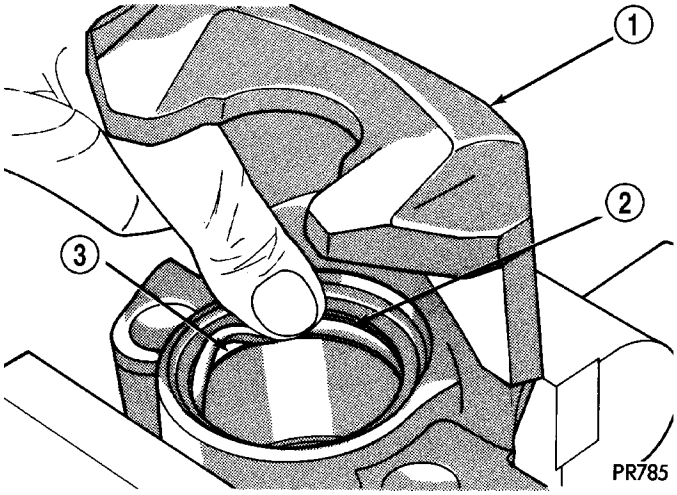

Fig. 36 Installing New Piston Seal

1 - CALIPER
2 - PISTON SEAL
3 - SEAL GROOVE

(2) Coat the new piston boot with clean brake fluid leaving a generous amount inside the boot.

(3) Position the dust boot over the piston after coating it with brake fluid.

DISC BRAKE CALIPER - REAR (Continued)

CAUTION: Force applied to the piston to seat it in the bore must be applied uniformly to avoid cocking and binding of the piston.

(4) Install piston into caliper bore pushing it past the piston seal until it bottoms in the caliper bore (Fig. 37).

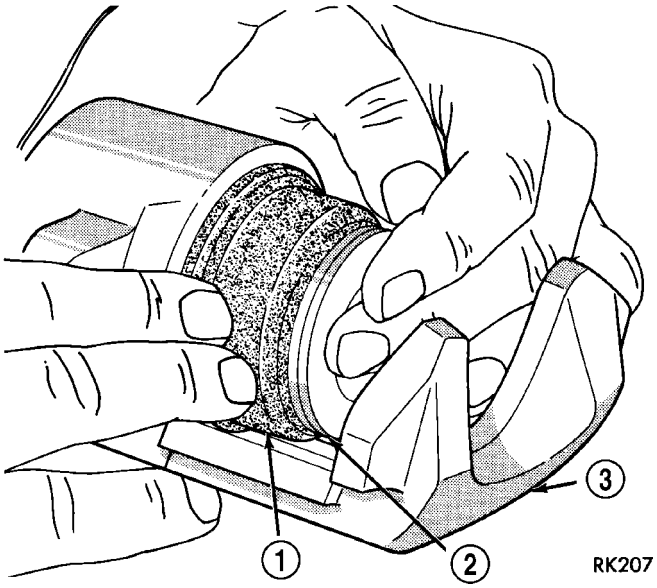

Fig. 37 Installing Piston Into Caliper Bore

1 - BOOT
2 - PISTON
3 - CALIPER

(5) Position the dust boot into the counterbore of the caliper assembly piston bore.

(6) Using a hammer and Installer, Special Tool C-4689 or C-4842 (depending on piston size), and Handle, Special Tool C-4171, drive the boot into the counterbore of the caliper as necessary (Fig. 38).

(7) Reinstall the caliper on the vehicle and bleed the brakes as necessary. Refer to Installation in this section.

INSTALLATION - REAR DISC BRAKE CALIPER

(1) Completely retract caliper piston back into piston bore of caliper assembly.

(2) Lubricate both adapter abutments with a liberal amount of Mopar® Multipurpose Lubricant, or equivalent.

(3) If removed, install the rotor on the hub making sure it is squarely seated on the face of the hub (Fig. 39).

CAUTION: Use care when installing caliper assembly onto adapter so the guide pin bushings and sleeves do not get damaged by the mounting bosses on adapter.

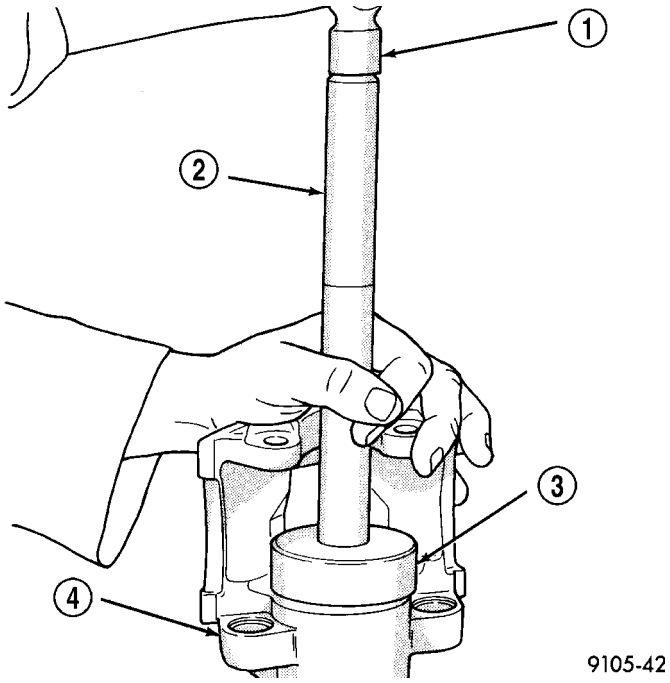

Fig. 38 Installing Dust Boot

1 - HAMMER
2 - SPECIAL TOOL C-4171
3 - SPECIAL TOOL C-4689 or C-4842
4 - CALIPER

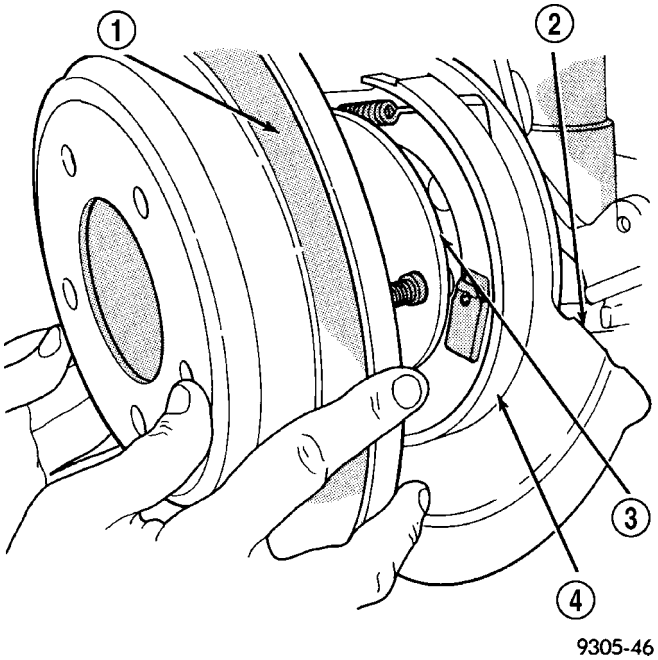

Fig. 39 Installing Rear Rotor

1 - BRAKING DISC
2 - DISC SHIELD
3 - HUB
4 - DRUM-IN-HAT PARKING BRAKE

DISC BRAKE CALIPER - REAR (Continued)

(4) Carefully lower caliper and brake shoes over rotor reversing the removal procedure (Fig. 33). Make sure that the caliper guide pin bolts, bushings and sleeves are clear of the adapter bosses.

CAUTION: Extreme caution should be taken not to cross thread the caliper guide pin bolts when they are installed.

(5) Install the caliper guide pin bolts (Fig. 32). Tighten the caliper guide pin bolts to a torque of 22 N·m (192 in. lbs.).

(6) Install the brake hose on the caliper. To do this, first place one NEW special fitting washer on each side of the hose fitting, then slide the banjo bolt through the fitting. Next, thread the banjo bolt into the threaded port on the rear of the brake caliper. Tighten the banjo bolt to a torque of 35 N·m (26 ft. lbs.).

(7) Install wheels and tire assembly.

(8) Tighten the wheel mounting stud nuts in proper sequence until all nuts are torqued to half specification. Then repeat the tightening sequence to the full specified torque of 135 N·m (100 ft. lbs.).

(9) Lower vehicle.

(10) Remove the brake pedal depressor (holding) tool.

(11) Bleed the hydraulic brake circuit to the brake caliper. (Refer to 5 - BRAKES - STANDARD PROCEDURE)

(12) Road test the vehicle and make several stops to wear off any foreign material on the brakes and to seat the brake pads.

DRUM

DIAGNOSIS AND TESTING - BRAKE DRUM

OUT-OF-ROUND

A brake drum whose braking surface is out-of-round can cause vehicle vibration and brake pedal pulsation upon braking. To measure brake drum out-of-round, perform the following:

(1) Remove the drum from the vehicle.

(2) Using a brake drum micrometer, measure the inside diameter at several points around the inside of the drum on the machined surface. Record the measurements.

Drum braking surface out-of-round must not exceed 0.050 mm (0.002 inch). If the measurement is not within specification, reface or replace the drum. (Refer to 5 - BRAKES/HYDRAULIC/MECHANICAL/DRUM - STANDARD PROCEDURE). Always replace the drum if machining will cause the diameter to exceed drum maximum diameter. All brake drums are marked with the maximum allowable brake drum diameter (Fig. 40).

RUNOUT

A runout measurement can be done along with the out-of-round measurement.

(1) Mount the drum on an off-vehicle brake lathe following the manufacturers instructions.

(2) Mount a dial indicator on the lathe and position the indicator needle against center of the brake drum machined surface.

(3) Slowly **rotate the drum by hand** recording high and low indicator readings through a 360° rotation.

Drum braking surface runout must not exceed 0.050 mm (0.002 inch). If the measurement is not within specification, reface or replace the drum. (Refer to 5 - BRAKES/HYDRAULIC/MECHANICAL/DRUM - STANDARD PROCEDURE). Always replace the drum if machining will cause the diameter to exceed drum maximum diameter. All brake drums are marked with the maximum allowable brake drum diameter (Fig. 40).

STANDARD PROCEDURE - BRAKE DRUM MACHINING

If a brake drum is deeply scored or warped, it can be machined on a brake lathe equipped to machine brake drums. Follow the manufacturers instructions on the machining procedure.

Measure the brake drum inside diameter before machining. If machining the drum will cause the drum to exceed maximum allowable diameter, do not machine the brake drum. It needs to be replaced.

CAUTION: Do not machine the brake drum if it will cause the drum to exceed maximum allowable diameter.

All brake drums are marked with the maximum allowable brake drum inside diameter (Fig. 40).

When machining, make sure the final finish feed cut is set to fine in order to avoid a screw effect on the brake shoes when the brakes are applied. This final feed cut specification varies from lathe manufacturer to lathe manufacturer.

REMOVAL

NOTE: Before proceeding, (Refer to 5 - BRAKES - WARNING)(Refer to 5 - BRAKES - CAUTION).

(1) Raise vehicle. (Refer to LUBRICATION & MAINTENANCE/HOISTING - STANDARD PROCEDURE)

(2) Remove rear tire and wheel assembly.

DRUM (Continued)

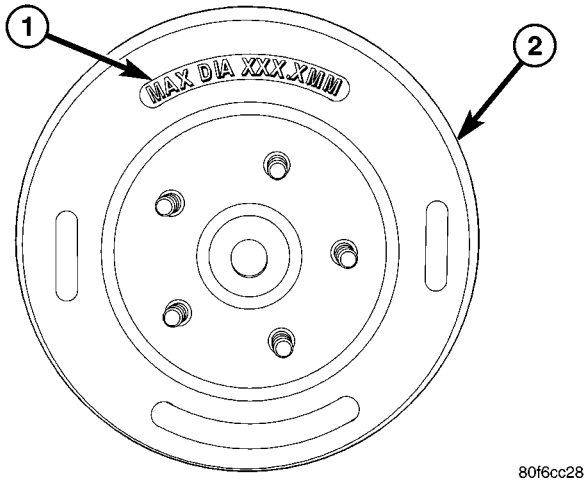

Fig. 40 Drum Maximum Diameter Identification

1 - MAXIMUM DIAMETER IDENTIFICATION 230.6 MM (9.079 IN.)
2 - BRAKE DRUM

(3) Slide brake drum off mounted wheel studs of hub and remove from vehicle (Fig. 41). If drum does not come off, further brake clearance can be obtained by backing off brake adjuster screw using following steps:

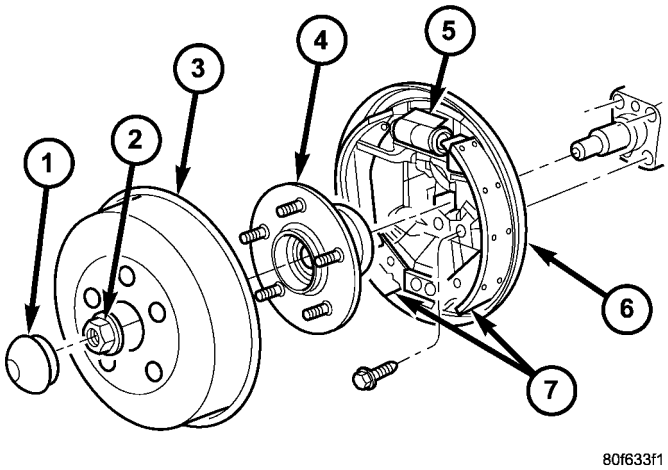

Fig. 41 Drum Brakes

1 - DUST CAP
2 - NUT
3 - DRUM
4 - HUB AND BEARING
5 - WHEEL CYLINDER
6 - SUPPORT PLATE
7 - BRAKE SHOES

(a) Fabricate pawl release tool like one shown using a coat hanger or heavy mechanics wire (Fig. 42).

(b) Remove plug from rear of support plate below wheel cylinder.

(c) Insert fabricated tool through access hole in support plate, under adjuster, against lever pawl (Fig. 43). Pawl is attached to and pivots from leading shoe. When inserting tool through hole, directing tool somewhat forward (toward leading shoe) assures better contact with pawl.

(d) While pushing on pawl with fabricated tool to disengage it from adjuster star-wheel teeth (Fig. 43), rotate star-wheel downward to back off adjustment using a small screwdriver or brake adjuster tool.

(e) Once adjuster screw is backed off a sufficient amount, drum should slide off wheel studs.

(f) Remove tools and reinstall plug in support plate.

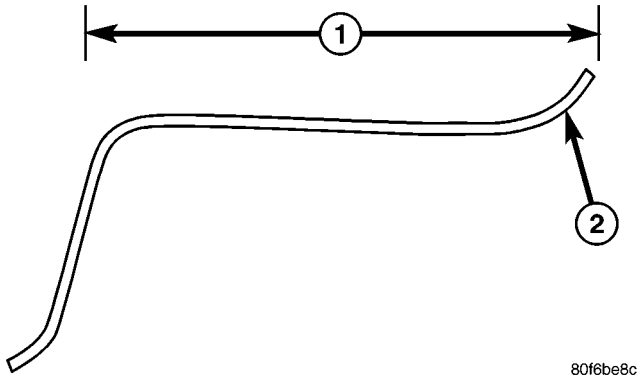

Fig. 42 Fabricated Tool

1 - APPROXIMATELY 15 CM (6 INCHES)
2 - THIS END TO BE INSERTED INTO BRAKE ASSEMBLY

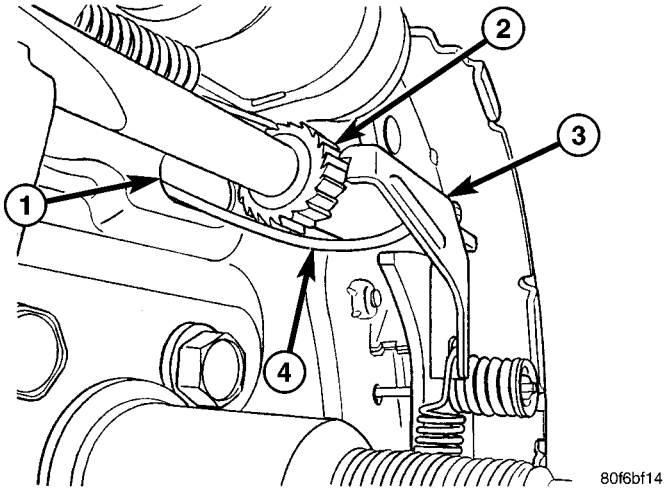

Fig. 43 Fabricated Tool Inserted Against Pawl

1 - ACCESS HOLE
2 - STAR WHEEL
3 - LEVER PAWL
4 - FABRICATED TOOL

INSTALLATION

NOTE: Before installing drum, inspect brake shoe linings for wear, alignment, and contamination. Repair or replace as necessary.

DRUM (Continued)

NOTE: If rust or any foreign material is present on hub, drum or wheel mating surfaces, wet wire brush these areas to remove prior to assembly of parts.

(1) Properly remove any buildup formed along outer edge of drum's machined braking surface.

(2) Adjust brake shoes to drum diameter using a brake shoe gauge. (Refer to 5 - BRAKES/HYDRAULIC/MECHANICAL/BRAKE PADS/SHOES - ADJUSTMENTS)

(3) Install brake drum on rear hub and bearing (Fig. 41).

(4) Install tire and wheel assembly. Tighten wheel mounting nuts to 135 N·m (100 ft. lbs.) torque.

(5) Lower vehicle.

(6) Road test vehicle stopping in both forward and reverse directions. Automatic-adjuster will continue to adjust brakes as necessary during road test.

FLUID

DIAGNOSIS AND TESTING - BRAKE FLUID CONTAMINATION

Indications of fluid contamination are swollen or deteriorated rubber parts.

Swollen rubber parts indicate the presence of petroleum in the brake fluid.

To test for contamination, put a small amount of drained brake fluid in clear glass jar. If fluid separates into layers, there is mineral oil or other fluid contamination of the brake fluid.

If brake fluid is contaminated, drain and thoroughly flush system. Replace master cylinder, proportioning valve, caliper seals, wheel cylinder seals, Antilock Brakes hydraulic unit and all hydraulic fluid hoses.

STANDARD PROCEDURE - BRAKE FLUID LEVEL CHECKING

Brake fluid level should be checked a minimum of twice a year.

Master cylinder reservoirs are marked, FULL and MIN, indicating the allowable brake fluid level range in the master cylinder brake fluid reservoir.

CAUTION: Use only Mopar® brake fluid or an equivalent from a tightly sealed container. Brake fluid must conform to DOT 3 specifications. Do not use petroleum-based fluid because seal damage in the brake system will result.

Although there is a range, the preferred level is FULL. If necessary, adjust the brake fluid level, bringing it to the FULL mark on the side of the master cylinder brake fluid reservoir.

SPECIFICATIONS

BRAKE FLUID

The brake fluid used in this vehicle must conform to DOT 3 specifications and SAE J1703 standards. No other type of brake fluid is recommended or approved for usage in the vehicle brake system. Use only Mopar brake fluid or an equivalent from a tightly sealed container.

CAUTION: Never use reclaimed brake fluid or fluid from an container which has been left open. An open container will absorb moisture from the air and contaminate the fluid.

CAUTION: Never use any type of a petroleum-based fluid in the brake hydraulic system. Use of such type fluids will result in seal damage of the vehicle brake hydraulic system causing a failure of the vehicle brake system. Petroleum based fluids would be items such as engine oil, transmission fluid, power steering fluid, etc.

JUNCTION BLOCK

DESCRIPTION

A junction block is used on vehicles that are not equipped with antilock brakes (ABS). The junction block is located on the left side of the lower radiator support (Fig. 44). The junction block mounts in the same location as the ABS integrated control unit (ICU) does on vehicles with ABS.

It has six threaded ports to which the brake tubes connect. Two are for the brake tubes coming from the master cylinder. The remaining four ports are for the brake tubes going to each brake assembly. The valve is permanently mounted to a bracket which fastens to the lower radiator support.

The junction block includes two proportioning valves for the rear brakes. One valve is mounted in each end of the block (Fig. 44). The proportioning valves are not serviced separately from the junction block.

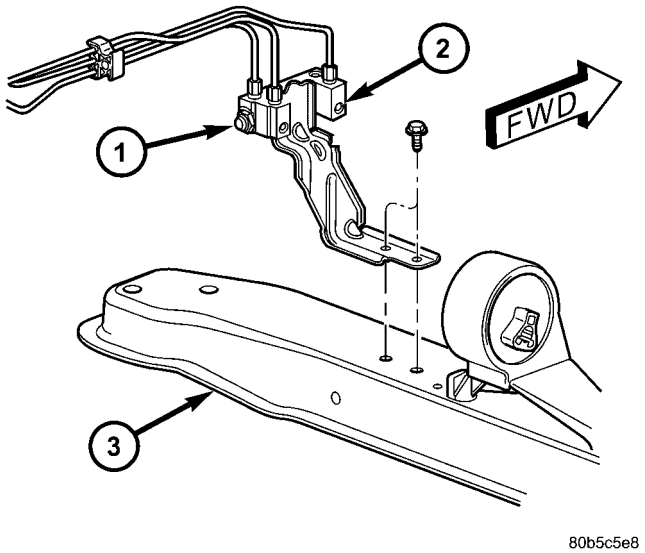

Fig. 44 JUNCTION BLOCK MOUNTING

1 - PROPORTIONING VALVE
2 - JUNCTION BLOCK
3 - LOWER RADIATOR SUPPORT

OPERATION

The junction block distributes the brake fluid coming from the master cylinder primary and secondary ports to the four brake tubes leading to the brakes. Since the junction block mounts in the same location as the ABS integrated control unit (ICU), it allows for the common use of brake tubes on the vehicle whether it is equipped with or without ABS.

The junction block includes two proportioning valves. Placed in the fluid flow passages leading to the rear brake tube ports, they balance front-to-rear braking. (Refer to 5 - BRAKES - BASE/HYDRAULIC/MECHANICAL/PROPORTIONING VALVE - OPERATION)

REMOVAL

(1) Disconnect and isolate the negative battery connection at the left front strut tower.

(2) Using a brake pedal holding tool such as shown (Fig. 45), depress brake pedal past its first 1 inch of travel and secure in this position. This will isolate the master cylinder reservoir from the brake hydraulic system, not allowing the brake fluid to drain out of the reservoir.

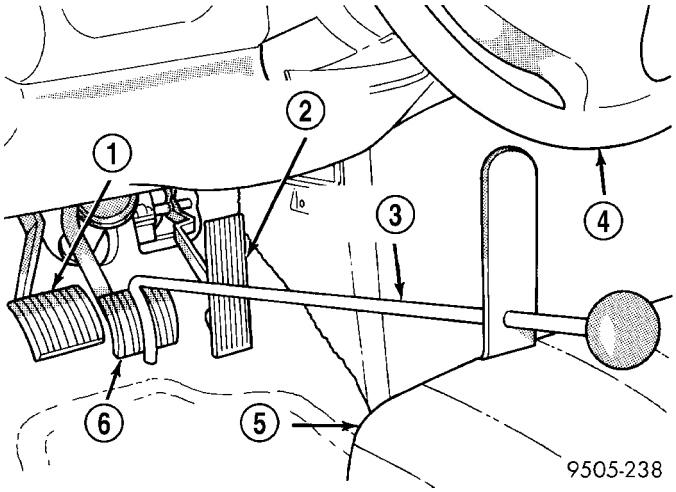

Fig. 45 Brake Pedal Holding Tool Installed (Typical)

1 - CLUTCH PEDAL (IF EQUIPPED WITH MANUAL TRANSAXLE)
2 - THROTTLE PEDAL
3 - BRAKE PEDAL HOLDING TOOL
4 - STEERING WHEEL
5 - DRIVER'S SEAT
6 - BRAKE PEDAL

(3) Remove the air cleaner housing. Refer to 9 - ENGINE/AIR INTAKE SYSTEM

(4) Clean any debris away from the fittings on top of the junction block.

(5) Remove the two brake tubes coming from the primary and secondary master cylinder ports at the junction block (Fig. 46).

(6) Remove the four chassis brake tubes going to each brake, mounted across the front top of the junction block (Fig. 46).

(7) Remove the bolts fastening the junction block mounting bracket to the lower radiator support (Fig. 44).

(8) Remove the junction block and bracket from the vehicle.

INSTALLATION

(1) Install the junction block with mounting bracket onto the lower radiator support. Install and tighten the mounting bolts to 38 N·m (28 ft. lbs.) torque.

(2) Install the four chassis brake tubes (going to each brake) to the junction block (Fig. 46). Tighten the tube fittings to 17 N·m (145 in. lbs.) torque with the aid of a crow foot wrench.

JUNCTION BLOCK (Continued)

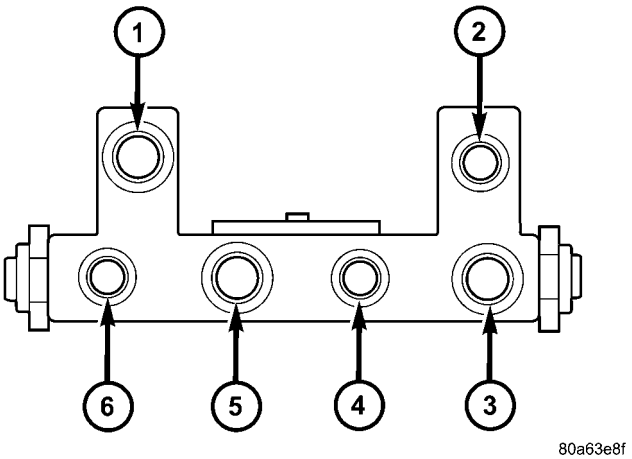

Fig. 46 Junction Block Fitting Identification

1 - FROM MASTER CYLINDER PRIMARY
2 - FROM MASTER CYLINDER SECONDARY
3 - TO LEFT FRONT BRAKE
4 - TO RIGHT REAR BRAKE
5 - TO LEFT REAR BRAKE
6 - TO RIGHT FRONT BRAKE

(3) Install the two brake tubes coming from the primary and secondary master cylinder ports to the top rear corners of the junction block (Fig. 46). Tighten the tube fittings to 17 N·m (145 in. lbs.) torque with the aid of a crow foot wrench.

(4) Install the air cleaner housing. Refer to 9 - ENGINE/AIR INTAKE SYSTEM.

(5) Remove the brake pedal holding tool.

(6) Reconnect the battery negative cable.

(7) Bleed the base brake system. (Refer to 5 - BRAKES - BASE - STANDARD PROCEDURE)

MASTER CYLINDER

STANDARD PROCEDURE - MASTER CYLINDER BLEEDING

(1) Clamp the master cylinder in a vise using only the mounting flange.

(2) Thread Bleeding Tubes, Special Tool 8358, into master cylinder primary and secondary ports. Position outlet ends of bleeding tubes in reservoir with the outlets below surface of brake fluid when reservoir is filled to its proper level.

(3) Fill brake fluid reservoir with Mopar® brake fluid or equivalent conforming to DOT 3 specifications.

(4) Using a wooden dowel, depress push rod slowly, and then allow pistons to return to released position. Repeat several times until all air bubbles are expelled from master cylinder.

(5) Remove bleeding tubes from master cylinder outlet ports, and then plug outlet ports and install fill cap on reservoir.

(6) Remove master cylinder from vise.

(7) Install the filler cap on master cylinder fluid reservoir.

(8) Install master cylinder. (Refer to 5 - BRAKES - BASE/HYDRAULIC/MECHANICAL/MASTER CYLINDER - INSTALLATION)

REMOVAL

(1) Remove vehicle wiring harness connector from brake fluid level switch in side of master cylinder brake fluid reservoir (Fig. 47).

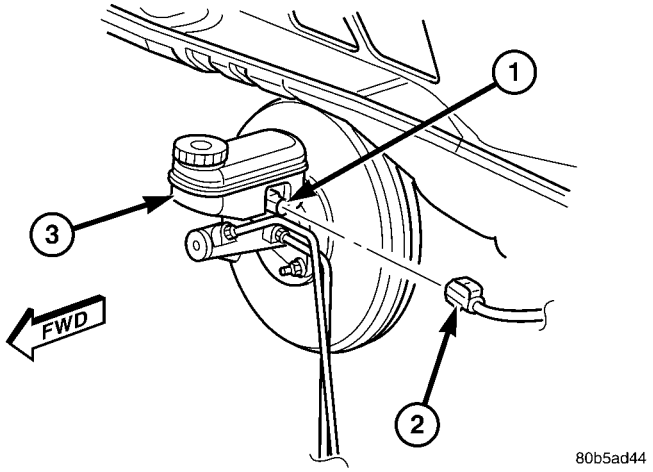

Fig. 47 BRAKE FLUID LEVEL SWITCH

1 - BRAKE FLUID LEVEL SWITCH
2 - WIRING CONNECTOR
3 - FLUID RESERVOIR

(2) Disconnect the primary and secondary brake tubes from master cylinder outlet ports (Fig. 48). Install plugs at open brake tube outlets on master cylinder assembly.

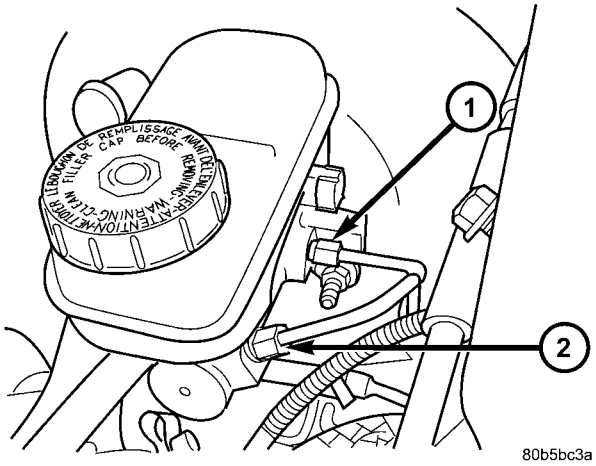

Fig. 48 PRIMARY AND SECONDARY BRAKE TUBES

1 - PRIMARY BRAKE TUBE
2 - SECONDARY BRAKE TUBE

MASTER CYLINDER (Continued)

(3) Using Mopar® Brake Parts Cleaner or equivalent, clean area where master cylinder attaches to booster.

(4) Remove the 2 nuts attaching master cylinder assembly to power brake vacuum booster.

(5) Slide master cylinder assembly straight off its mounting studs on power brake vacuum booster.

INSTALLATION

(1) Position master cylinder assembly on studs of power brake unit, aligning push rod on power brake vacuum booster with piston of master cylinder.

(2) Install the 2 master cylinder to power brake vacuum booster mounting nuts. Tighten both nuts to a torque of 26 N·m (230 in. lbs.).

(3) Connect brake tubes to master cylinder primary and secondary ports. Then tighten the tube nuts to a torque of 17 N·m (145 in. lbs.).

(4) Connect wiring harness connector to brake fluid level switch.

(5) Fill master cylinder with clean, fresh Mopar® Brake Fluid or equivalent.

(6) Road test vehicle to ensure proper operation of brakes.

POWER BRAKE BOOSTER

DIAGNOSIS AND TESTING - POWER BRAKE BOOSTER

BASIC TEST

(1) With engine off, depress and release the brake pedal several times to purge all vacuum from the power brake booster.

(2) Depress and hold the pedal with light effort (15 to 25 lbs. pressure), then start the engine.

The pedal should fall slightly, then hold. Less effort should be needed to apply the pedal at this time. If the pedal fell as indicated, perform the VACUUM LEAK TEST listed after the BASIC TEST. If the pedal did not fall, continue on with this BASIC TEST.

(3) Disconnect the vacuum hose on the side of the vacuum check valve that leads to the speed control, then connect a vacuum gauge to the open vacuum port on the valve.

(4) Start the engine.

(5) When the engine is at warm operating temperature, allow it to idle and check the vacuum at the gauge.

If the vacuum supply is 12 inches Hg (40.5 kPa) or more, the power brake booster is defective and must be replaced. If the vacuum supply is below 12 inches, continue on with this BASIC TEST.

(6) Shut off the engine.

(7) Connect the vacuum gauge to the vacuum reference port on the engine intake manifold.

(8) Start the engine and observe the vacuum gauge.

If the vacuum is still low, check the engine tune and repair as necessary. If the vacuum is above 12 inches, the hose or check to the booster has a restriction or leak.

Once an adequate vacuum supply is obtained, repeat the BASIC TEST.

VACUUM LEAK TEST

(1) Disconnect the vacuum hose on the side of the power brake booster vacuum check valve that leads to the speed control, then connect a vacuum gauge to the open vacuum port on the valve.

(2) Remove the remaining hose on the vacuum check valve that is not the vacuum supply hose coming from the intake manifold. Cap off the open port on the check valve.

(3) Start the engine.

(4) Allow the engine to warm up to normal operating temperature and engine idle.

(5) Using vacuum line pliers, close off the vacuum supply hose near the booster and observe the vacuum gauge.

If the vacuum drop exceeds 1.0 inch Hg (3.3 kPa) in one minute, repeat the above steps to confirm the reading. The vacuum loss should be less than 1.0 inch Hg in one minute time span. If the loss is more than 1.0 inch Hg, replace the power brake booster. If it is not, continue on with this test.

(6) Remove the pliers from the hose temporarily.

(7) Apply light effort (approximately 15 lbs. of force) to the brake pedal and hold the pedal steady. Do not move the pedal once the pressure is applied or the test results may vary.

(8) Have an assistant reattach the pliers to the vacuum supply hose.

(9) Allow 5 seconds for stabilization, then observe the vacuum gauge.

If the vacuum drop exceeds 3.0 inches Hg (10 kPa) in 15 seconds, repeat the above steps to confirm the reading. The vacuum loss should be less than 3.0 inches Hg in 15 seconds time span. If the loss is more than 3.0 inches Hg, replace the power brake booster. If it is not, the booster is not defective.

REMOVAL - POWER BRAKE BOOSTER

(1) Remove the remote ground cable from the ground stud located on the left shock tower.

(2) Correctly isolate remote ground cable by installing the ground cable insulator on the strut tower ground stud as shown (Fig. 49). **This will prevent accidental grounding of the remote ground cable.**

(3) Disconnect the wiring harness connector and vacuum hose at speed control servo.

POWER BRAKE BOOSTER (Continued)

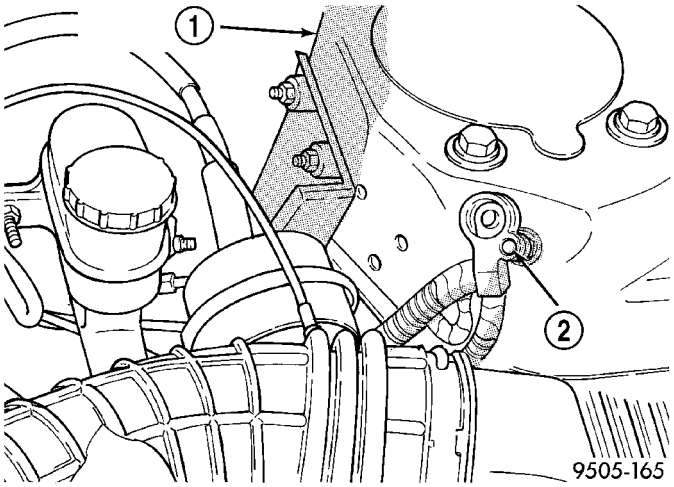

Fig. 49 Correctly Isolated Remote Ground Cable

1 - LEFT STRUT TOWER
2 - GROUND STUD

(4) Remove speed control servo mounting nuts. Leaving cable attached, move servo out off to the side.

(5) Remove the master cylinder from the booster. (Refer to 5 - BRAKES/HYDRAULIC/MECHANICAL/ MASTER CYLINDER - REMOVAL)

(6) Remove the vacuum hoses from the check valve located on the power brake vacuum booster.

(7) Remove the electrical connector and mounting screw from the purge solenoid mounted on the left frame rail (Fig. 50). Allow the solenoid to drop downward.

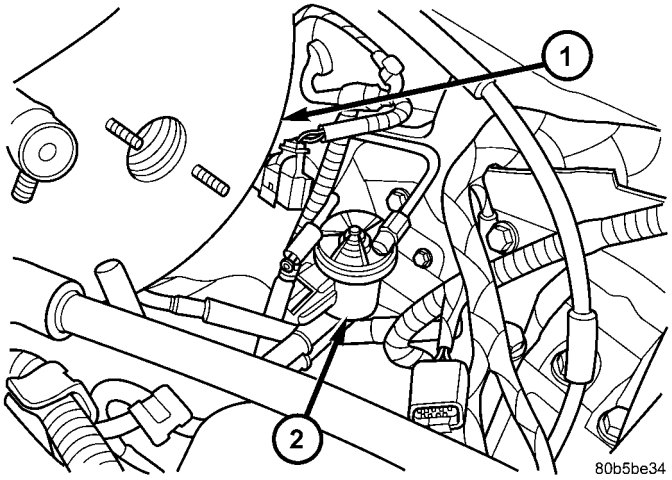

Fig. 50 PURGE SOLENOID

1 - POWER BRAKE BOOSTER
2 - PURGE SOLENOID

(8) Locate the power brake vacuum booster input rod to brake pedal attachment under instrument panel. Position a small screwdriver between the center tang on the power brake booster input rod to brake pedal pin retaining clip (Fig. 51). Rotate screwdriver enough to allow retaining clip center tang to pass over end of brake pedal pin. Then pull retaining clip off brake pedal pin. **Discard retaining clip. Replace only with a new retaining clip when assembled.**

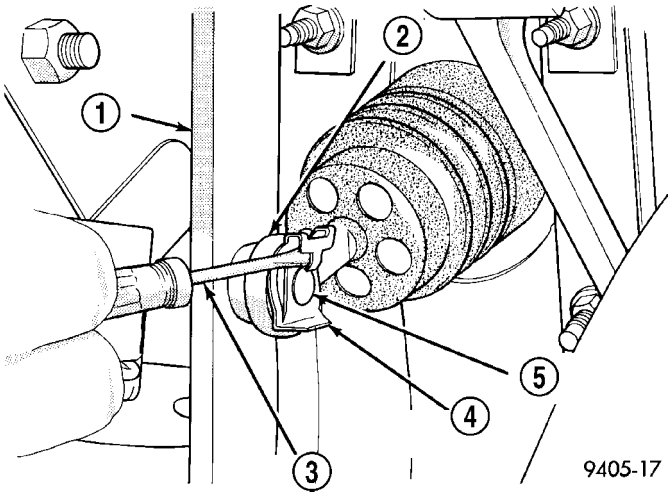

Fig. 51 Input Rod Retaining Pin

1 - BRAKE PEDAL
2 - INPUT ROD
3 - SCREWDRIVER
4 - RETAINING CLIP
5 - BRAKE PEDAL PIN

(9) Remove the 4 nuts attaching power brake vacuum booster to dash panel. Nuts are accessible from under dash panel in area of the steering column and pedal bracket assembly (Fig. 52).

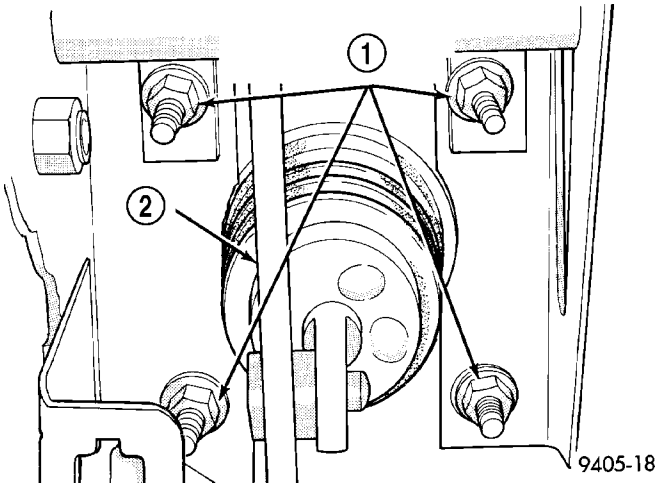

Fig. 52 Power Brake Booster Mounting

1 - POWER BRAKE BOOSTER MOUNTING NUTS
2 - BRAKE PEDAL

(10) Slide power brake vacuum booster straight forward until mounting studs clear dash panel, and remove from vehicle.

POWER BRAKE BOOSTER (Continued)

CAUTION: Do not attempt to disassemble the power brake vacuum booster it is to be serviced ONLY as a complete assembly.

INSTALLATION - POWER BRAKE BOOSTER

(1) Position power brake booster onto dash panel.

(2) Install and torque the 4 power brake vacuum booster mounting nuts (Fig. 52) to 29 N·m (250 in. lbs.) torque.

(3) Using lubriplate, or an equivalent, coat the surfaces of the brake pedal pin that contact the power brake vacuum booster input rod.

(4) Connect power brake vacuum booster input rod to brake pedal pin and install a NEW retaining clip. **Use only a new retainer clip DO NOT USE the old clip.**

(5) Install the purge solenoid to the left frame rail and connect its wiring harness (Fig. 50).

(6) Install the vacuum hoses on the booster check valve.

(7) Install the master cylinder and connect the fluid level switch. (Refer to 5 - BRAKES/HYDRAULIC/MECHANICAL/MASTER CYLINDER - INSTALLATION)

(8) If equipped, install speed control servo on the mounting studs. Install the 2 speed control servo bracket mounting nuts and tighten to a torque of 6 N·m (55 in. lbs.). Install electrical connector and vacuum hose on speed control servo.

(9) Install the throttle cable, and if equipped, the speed control cable on the cam of the throttle body assembly.

(10) Install the remote ground cable on the ground stud located on the left strut tower. Install and securely tighten the ground cable attaching nut.

(11) Check brake lamp operation. If required, adjust brake lamp switch as necessary. (Refer to 8 - ELECTRICAL/LAMPS/LIGHTING - EXTERIOR/ BRAKE LAMP SWITCH - ADJUSTMENTS)

(12) Road test vehicle to ensure proper operation of the vehicles brake system and speed control.

PROPORTIONING VALVE

DESCRIPTION

Proportioning valves are included on vehicles **without** antilock brakes (ABS). They are located in the junction block. (Refer to 5 - BRAKES/HYDRAULIC/MECHANICAL/JUNCTION BLOCK - DESCRIPTION)

NOTE: Vehicles with ABS do not have proportioning valves. They have electronic variable brake proportioning (EVBP).

OPERATION

Proportioning valves balance front to rear braking by controlling (at a given ratio) brake hydraulic pressure to the rear brakes above a preset level (split point). On light pedal applications equal brake pressure is transmitted to both the front and rear brakes. On heavier pedal applications, through the use of proportioning valves, the pressure transmitted to the rear will be lower than the front brakes. This prevents premature rear wheel skid.

If hydraulic pressure is lost in one-half of the diagonally split brake hydraulic system, the operation of the proportioning valve in the remaining half is not affected.

DIAGNOSIS AND TESTING - PROPORTIONING VALVE

NOTE: The following procedure is designed for vehicles NOT equipped with ABS.

Vehicles without Antilock Brakes have two proportioning valves. One proportioning valve controls the right rear brake, and the other proportioning valve controls the left rear brake. The proportioning valves are located in the junction block. Vehicle's with ABS do not have proportioning valves to test, they use Electronic Variable Brake Proportioning which is built into the Integrated Control Unit (ICU).

If premature wheel skid occurs on a hard brake application, it could be an indication that a malfunction has occurred with one of the two rear brake proportioning valves. Test the valve that controls the side of the vehicle on which the skid occurs. Both proportioning valves have the same pressure specifications and are tested in the same way.

(1) Clean any debris away from the fittings on top of the junction block.

(2) If the left rear proportioning valve is suspect, disconnect the tube nut fitting at the primary port of the junction block (Fig. 53). Install appropriate Adapter, Special Tool 6833, in its place on the junction block.

(3) If the right rear proportioning valve is suspect, disconnect the tube nut fitting at the secondary port of the junction block (Fig. 53). Install appropriate Adapter, Special Tool 6833, in its place on the junction block.

PROPORTIONING VALVE (Continued)

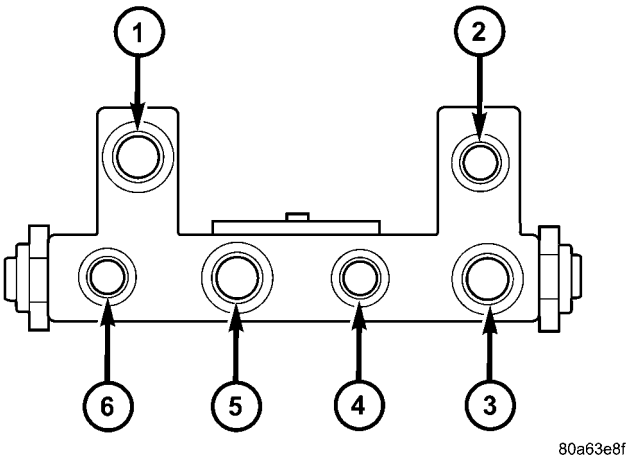

Fig. 53 Junction Block Fitting Identification

1 - FROM MASTER CYLINDER PRIMARY
2 - FROM MASTER CYLINDER SECONDARY
3 - TO LEFT FRONT BRAKE
4 - TO RIGHT REAR BRAKE
5 - TO LEFT REAR BRAKE
6 - TO RIGHT FRONT BRAKE

(4) Connect previously removed brake tube to Adapter.

(5) Install Pressure Gauge, Special Tool C-4007-A, to the Adapter.

(6) Tighten all tube nut fittings to 17 N·m (145 in. lbs.) torque.

(7) Remove the chassis brake tube leading to either the left rear or right rear brake at the junction block (Fig. 53).

(8) If the left rear proportioning valve is suspect, install appropriate Adapter, Special Tool 6833, in the open port for the left rear chassis tube.

(9) If the right rear proportioning valve is suspect, instal appropriate Adapter, Special Tool 6833, in the open port for the right rear chassis tube.

(10) Connect previously removed brake tube to Adapter.

(11) Install Pressure Gauge, Special Tool C-4007-A, to the Adapter.

(12) Tighten all tube nut fittings to 17 N·m (145 in. lbs.) torque.

(13) Bleed any air out of the system. This includes bleeding the air from the hose between the pressure test fitting and pressure gauge, which is done at the pressure gauge.

(14) With the aid of a helper, apply pressure to the brake pedal until reading on proportioning valve inlet gauge (at master cylinder) is at the pressure shown on the chart at the end of this procedure. Then check the pressure reading on the proportioning valve outlet gauge (at junction block outlet to rear brake). If proportioning valve outlet pressure does not agree with value shown on the chart (once inlet pressure shown on chart is obtained), replace the junction block (with internal proportioning valves) (Refer to 5 - BRAKES - BASE/HYDRAULIC/MECHANICAL/JUNCTION BLOCK - REMOVAL). If pressure is within specifications, do not replace proportioning valve and perform the following steps.

(15) Remove the Pressure Gauges and Adapters from the junction block.

(16) Reinstall the brake tubes to the junction block ports. Tighten tube nuts fitting to 17 N·m (145 in. lbs.) torque.

(17) Bleed the affected brake lines. (Refer to 5 - BRAKES - BASE - STANDARD PROCEDURE)

(18) If no problem is found with the proportioning valves, check the rear wheel brake shoe linings for contamination or for replacement brake shoes not meeting OEM brake lining material specifications. These conditions can also cause premature rear wheel skid.

PROPORTIONING VALVE SPECIFICATIONS

Vehicle	Brake System Type	Split Point	Slope	Inlet Pressure*	Outlet Pressure*
JR27	Disc/Disc	400 psi	0.27	1000 psi	510-610 psi
JR41	Disc/Drum	400 psi	0.34	1000 psi	550-650 psi
JR41	Disc/Disc	350 psi	0.27	1000 psi	525-625 psi

*** NOTE: Inlet and outlet pressures listed are approximations and actual results may differ. Pressures listed should be used as guidelines only.**

NOTE: DaimlerChrysler reserves the right to change values of proportioning valves used.

ROTOR

DIAGNOSIS AND TESTING - BRAKE ROTOR

Any servicing of the rotor requires extreme care to maintain the rotor within service tolerances to ensure proper brake action.

Excessive runout or wobble in a rotor can increase pedal travel due to piston knock-back. This increases guide pin sleeve wear due to the tendency of the caliper to follow the rotor wobble.

When diagnosing a brake noise or pulsation, the machined disc braking surface should be checked and inspected.

BRAKING SURFACE INSPECTION

Light braking surface scoring and wear is acceptable. If heavy scoring or warping is evident, the rotor must be refaced or replaced. For information on brake rotor machining, (Refer to 5 - BRAKES/HYDRAULIC/MECHANICAL/ROTORS - STANDARD PROCEDURE).

Excessive wear and scoring of the rotor can cause improper lining contact on the rotor's braking surface. If the ridges on the rotor are not removed before new brake shoes are installed, improper wear of the shoes will result.

If a vehicle has not been driven for a period of time, the rotor's braking surface will rust in the areas not covered by the brake shoes at that time. Once the vehicle is driven, noise and chatter from the disc brakes can result when the brakes are applied.

Some discoloration or wear of the rotor surface is normal and does not require resurfacing when linings are replaced. If cracks or burned spots are evident, the rotor must be replaced.

ROTOR MINIMUM THICKNESS

Measure rotor thickness at the center of the brake shoe contact surface. Replace the rotor if it is worn below minimum thickness or if machining the rotor will cause its thickness to fall below specifications.

CAUTION: Do not machine the rotor if it will cause the rotor to fall below minimum thickness.

Minimum thickness specifications are cast on the rotor's unmachined surface (Fig. 54). Limits can also be found in the table at the end of this brake rotor information.

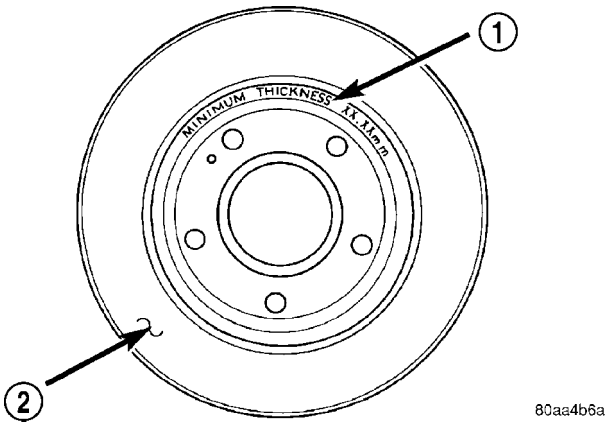

Fig. 54 Minimum Thickness Markings (Typical)

1 - ROTOR MINIMUM THICKNESS MARKING
2 - ROTOR

ROTOR THICKNESS VARIATION

Thickness variation in a rotor's braking surface can result in pedal pulsation, chatter and surge. This can also be caused by excessive runout in the rotor or the hub.

Rotor thickness variation measurements should be made in conjunction with measuring runout. Measure thickness of the brake rotor at 12 equal points around the rotor braking surface with a micrometer at a radius approximately 25 mm (1 inch) from edge of rotor (Fig. 55). If thickness measurements vary by more than 0.013 mm (0.0005 inch), the rotor should refaced or replaced. For information on brake rotor machining, (Refer to 5 - BRAKES/HYDRAULIC/MECHANICAL/ROTORS - STANDARD PROCEDURE).

ROTOR RUNOUT

On-vehicle rotor runout is the combination of the individual runout of the hub face and the runout of the rotor. (The hub and rotor runouts are separable). To measure rotor runout on the vehicle, first remove the tire and wheel assembly. Reinstall the wheel mounting nuts on the studs, tightening the rotor to the hub. Mount the Dial Indicator, Special Tool C-3339, with Mounting Adaptor, Special Tool SP-1910 on steering arm. The dial indicator plunger should contact braking surface of rotor approximately 25 mm (one inch) from outer edge of rotor (Fig. 56). Check lateral runout on both sides of the rotor, marking the low and high spots on both. Runout limits can be found in the table at the end of this brake rotor information.

ROTOR (Continued)

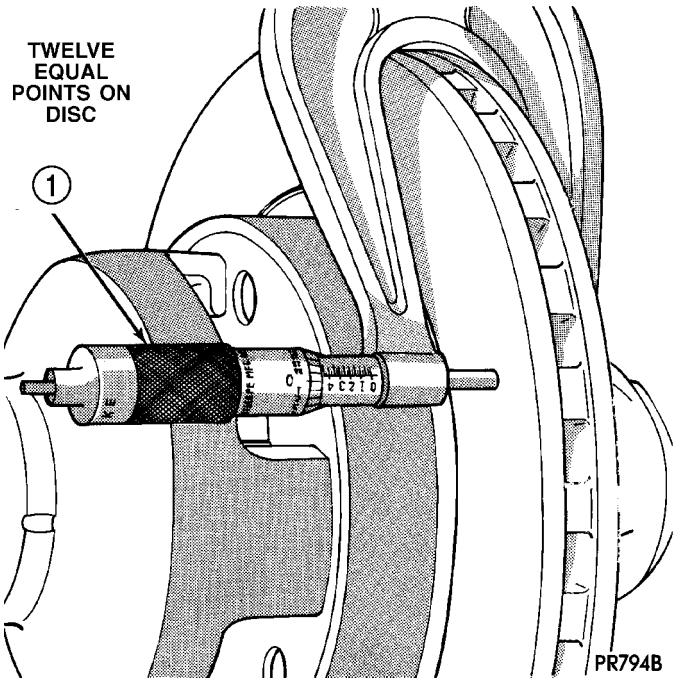

Fig. 55 Checking Rotor For Thickness

1 - MICROMETER

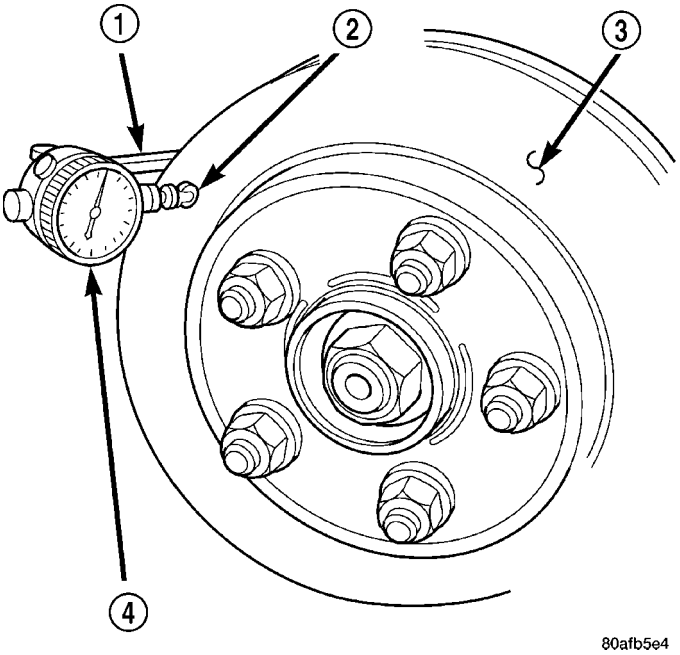

Fig. 56 Checking Rotor Runout

1 - SPECIAL TOOL SP-1910
2 - 25 mm FROM EDGE
3 - DISC SURFACE
4 - SPECIAL TOOL C-3339

If runout is in excess of the specification, check the lateral runout of the hub face. Before removing the rotor from the hub, place a chalk mark across both the rotor and the one wheel stud closest to where the high runout measurement was taken. This way, the original mounting spot of the rotor on the hub is indexed (Fig. 57).

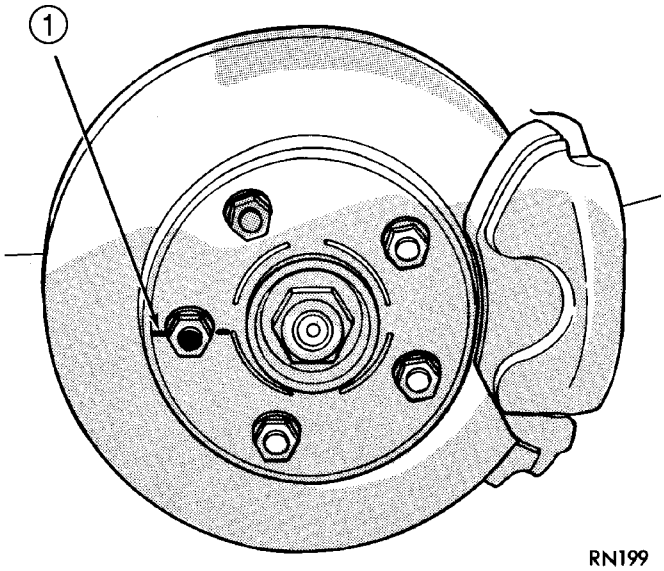

Fig. 57 Marking Rotor and Wheel Stud

1 - CHALK MARK

Remove the rotor from the hub.

NOTE: Clean the hub face surface before checking runout. This provides a clean surface to get an accurate indicator reading.

ROTOR (Continued)

Mount Dial Indicator, Special Tool C-3339, and Mounting Adaptor, Special Tool SP-1910, to the steering knuckle. Position the indicator stem so it contacts the hub face near the outer diameter. Care must be taken to position stem outside of the stud circle, but inside of the chamfer on the hub rim (Fig. 58).

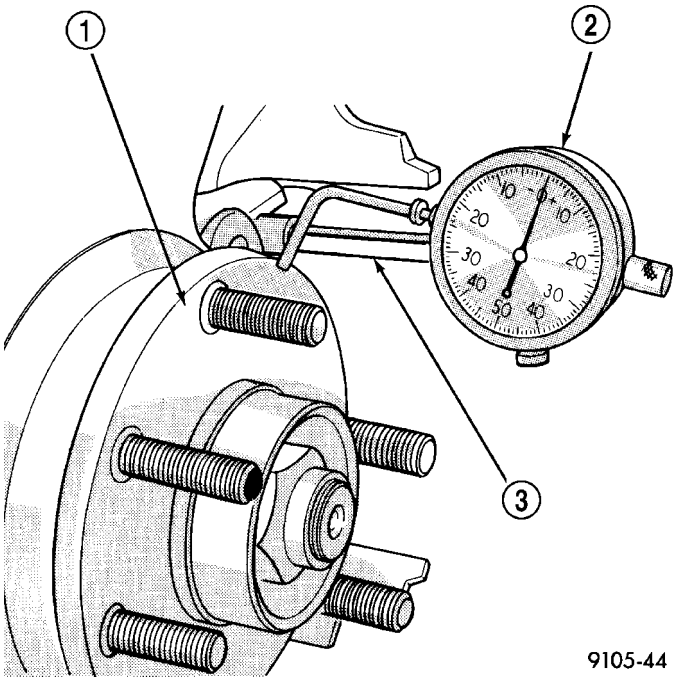

Fig. 58 Checking Hub Runout

1 - HUB SURFACE
2 - SPECIAL TOOL C-3339
3 - SPECIAL TOOL SP-1910

Hub runout should not exceed 0.05 mm (0.0019 inch). If runout exceeds this specification, the hub must be replaced. Refer to SUSPENSION.

If the hub runout does not exceed this specification, install the rotor back on the hub, aligning the chalk marks on the rotor with a wheel mounting stud, two studs apart from the original stud (Fig. 59). Tighten nuts in the proper sequence and torque to specifications.

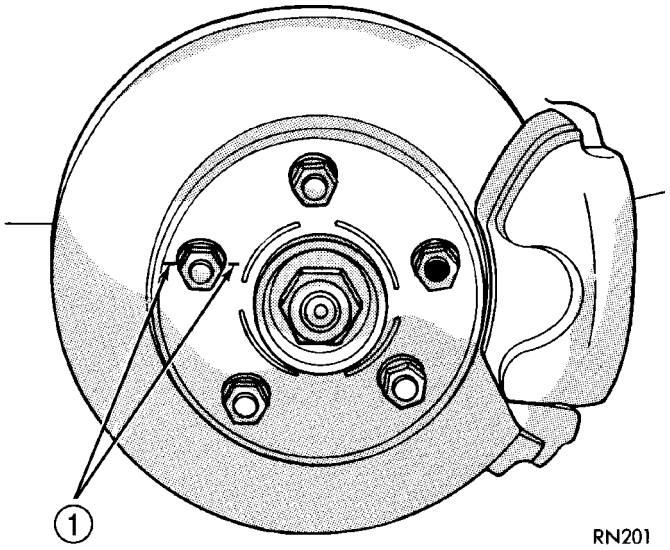

Fig. 59 Index Rotor And Wheel Stud

1 - CHALK MARK

Recheck brake rotor runout to see if the runout is now within specifications.

If runout is not within specifications, reface or replace the brake rotor. For information on brake rotor machining, (Refer to 5 - BRAKES/HYDRAULIC/MECHANICAL/ROTORS - STANDARD PROCEDURE).

BRAKE ROTOR LIMITS

Braking Rotor	Rotor Thickness	Minimum Rotor Thickness	Rotor Thickness Variation	Rotor Runout*	Rotor Micro Finish
Front Rotor	22.87–23.13 mm 0.900-0.911 in.	21.4 mm 0.843 in.	0.013 mm 0.0005 in.	0.10 mm 0.004 in.	15-80 RMS
Rear Rotor	8.87–9.13 mm 0.350-0.360 in.	7.25 mm 0.285 in.	0.013 mm 0.0005 in.	0.10 mm 0.004 in.	15-80 RMS
* TIR—Total Indicator Reading (Measured On Vehicle)					

ROTOR (Continued)

STANDARD PROCEDURE - BRAKE ROTOR MACHINING

NOTE: Refacing the rotor is not required each time the brake pads are replaced, only when the need is foreseen.

Any servicing of the rotor requires extreme care to maintain the rotor within service tolerances to ensure proper brake action.

If the rotor surface is deeply scored or warped, or there is a complaint of brake roughness or brake pedal pulsation, the rotor should be refaced using a hub-mounted on-car brake lathe (Fig. 60), or replaced.

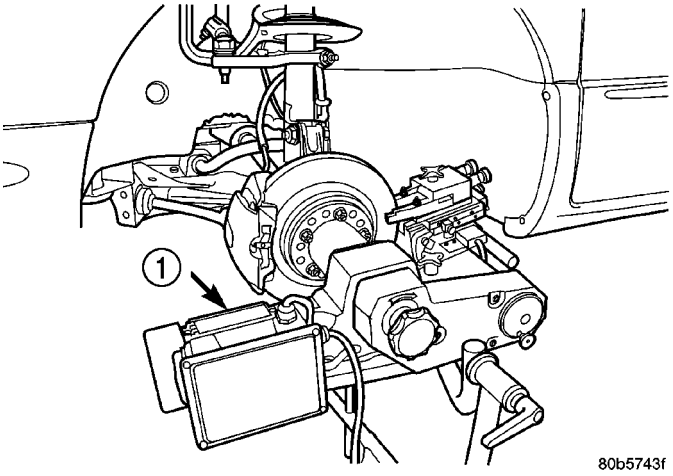

Fig. 60 On-Car Brake Lathe

1 - ON-CAR BRAKE LATHE

The use of a hub-mounted on-car brake lathe is highly recommended to eliminate the possibility of excessive runout. It trues the brake rotor to the vehicle's hub and bearing.

NOTE: All rotors have markings for minimum allowable thickness cast on an un-machined surface of the rotor (Fig. 61).

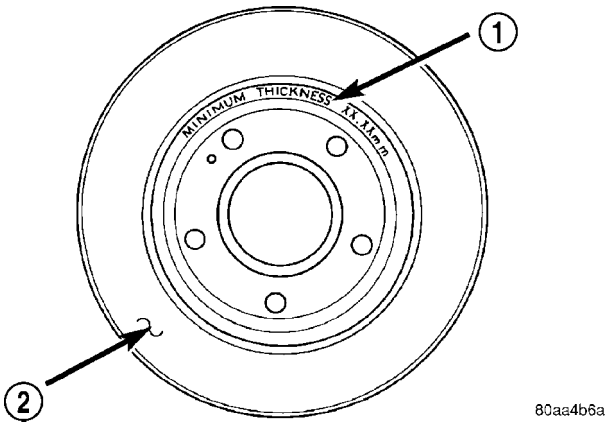

Fig. 61 Minimum Brake Rotor Thickness Markings (Typical)

1 - ROTOR MINIMUM THICKNESS MARKING
2 - ROTOR

Minimum allowable thickness is the minimum thickness which the brake rotor machined surface may be cut to.

CAUTION: Do not machine the rotor if it will cause the rotor to fall below minimum thickness.

Before installation, verify the brake rotor face and the hub adapters are free of any chips, rust, or contamination.

When mounting and using the brake lathe, strict attention to the brake lathe manufacturer's operating instructions is required.

Machine both sides of the brake rotor at the same time. Cutting both sides at the same time minimizes the possibility of a tapered or uneven cut.

SPECIFICATIONS AND LIMITS

When refacing a rotor, the required TIR (Total Indicator Reading) and thickness variation limits MUST BE MAINTAINED. Extreme care in the operation of rotor turning equipment is required.

LIMITS/SPECIFICATIONS

Braking Rotor	Rotor Thickness	Minimum Rotor Thickness	Rotor Thickness Variation	Rotor Runout*	Rotor Micro Finish
Front Rotor	22.87–23.13 mm 0.900-0.911 in.	21.4 mm 0.843 in.	0.013 mm 0.0005 in.	0.10 mm 0.004 in.	15-80 RMS
Rear Rotor	8.87–9.13 mm 0.350-0.360 in.	7.25 mm 0.285 in.	0.013 mm 0.0005 in.	0.10 mm 0.004 in.	15-80 RMS
* TIR—Total Indicator Reading (Measured On Vehicle)					

ROTOR (Continued)

REMOVAL

REMOVAL - FRONT ROTOR

(1) Raise the vehicle. (Refer to LUBRICATION & MAINTENANCE/HOISTING - STANDARD PROCEDURE)

(2) Remove the front tire and wheel assembly.

(3) Slide the caliper outward in an effort to retract the caliper piston into its bore.

(4) Remove the two bolts securing disc brake caliper adapter to the steering knuckle (Fig. 62).

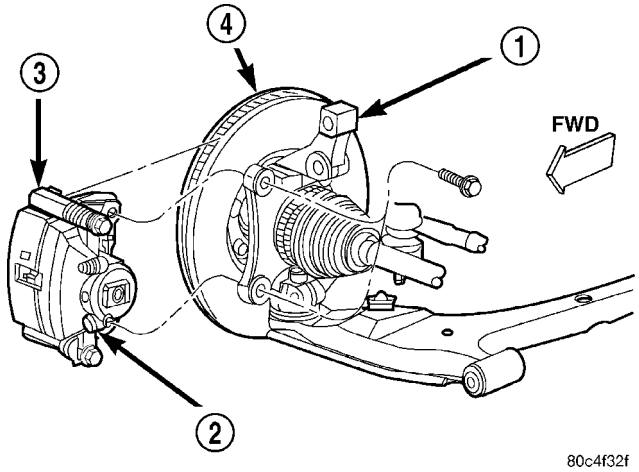

Fig. 62 Caliper/Adapter Mounting (Typical)

1 - STEERING KNUCKLE
2 - DISC BRAKE CALIPER
3 - DISC BRAKE CALIPER ADAPTER
4 - BRAKE ROTOR

(5) Remove the disc brake caliper and adapter from the knuckle as an assembly. Hang the assembly out of the way using wire or a bungee cord. Use care not to overextend the brake hose when doing this.

(6) Remove the clips retaining the brake rotor to the wheel studs.

(7) Remove the brake rotor.

REMOVAL - REAR ROTOR

(1) Raise vehicle. (Refer to LUBRICATION & MAINTENANCE/HOISTING - STANDARD PROCEDURE)

(2) Remove rear tire and wheel.

(3) Remove the caliper and shoes from adapter and hang out of way. (Refer to 5 - BRAKES/HYDRAULIC/MECHANICAL/BRAKE PADS/SHOES - REMOVAL)

(4) Remove any clips on the wheel mounting studs.

(5) Remove rotor from hub (Fig. 63).

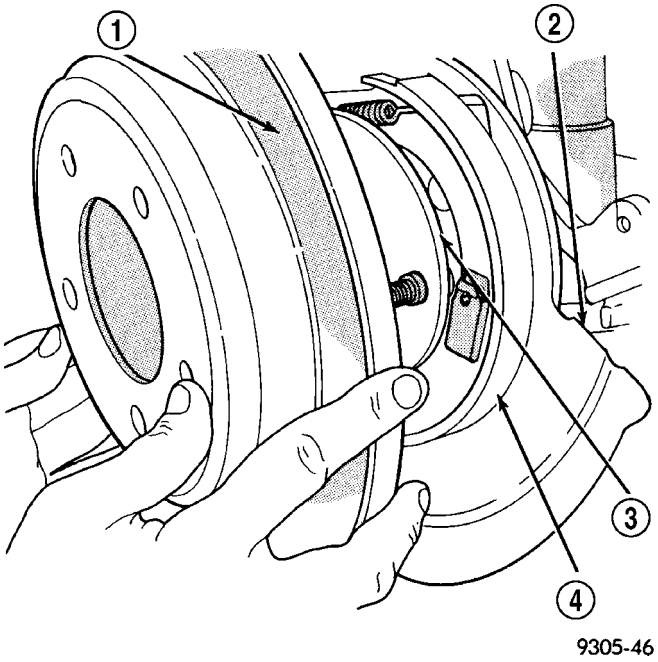

Fig. 63 Removing/Installing Rear Rotor

1 - BRAKING DISC
2 - DISC SHIELD
3 - HUB
4 - DRUM-IN-HAT PARKING BRAKE

INSTALLATION

INSTALLATION - FRONT ROTOR

(1) Install the brake rotor over the studs on the hub.

(2) Install the disc brake caliper and adapter assembly over the brake rotor.

(3) Install the mounting bolts securing the caliper adapter to the steering knuckle (Fig. 62). Tighten the bolts to a torque of 80 N·m (60 ft. lbs.).

(4) Install the tire and wheel assembly. Tighten the wheel mounting nuts to a torque of 135 N·m (100 ft. lbs.).

(5) Lower the vehicle.

(6) Pump the brake pedal several times before moving the vehicle to set the shoes to the brake rotor.

(7) Road test the vehicle and make several stops to seat the brake shoes to the rotor.

INSTALLATION - REAR ROTOR

(1) Install rotor on wheel mounting studs (Fig. 63).

(2) Install caliper and shoes on vehicle. (Refer to 5 - BRAKES/HYDRAULIC/MECHANICAL/BRAKE PADS/SHOES - INSTALLATION)

(3) Install wheel and tire assembly.

(4) Lower vehicle.

SUPPORT PLATE

REMOVAL

NOTE: Before proceeding, (Refer to 5 - BRAKES - WARNING)(Refer to 5 - BRAKES - CAUTION).

NOTE: Make sure parking brake is in "released" position before raising vehicle.

(1) Depress brake pedal past its first inch of travel and hold it in this position using a brake pedal depressor (holding) tool. This is done to isolate master cylinder from brake hydraulic system disallowing brake fluid to completely drain out of brake fluid reservoir once brake flex hose is disconnected.

(2) Raise vehicle. (Refer to LUBRICATION & MAINTENANCE/HOISTING - STANDARD PROCEDURE)

(3) Remove tire and wheel assembly.

(4) Unthread flex hose tube nut at wheel cylinder and remove hose (Fig. 64). Cap end of hose.

(5) Remove flex hose routing bracket screw and move hose out of way (Fig. 64).

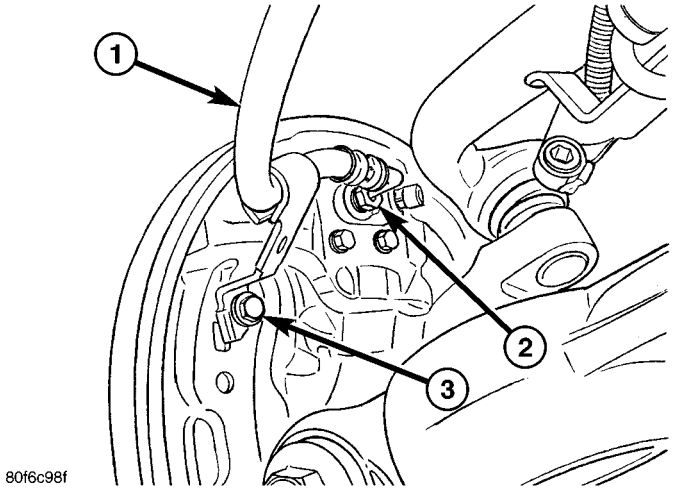

Fig. 64 Flex Hose Mounting To Support Plate

1 - FLEX HOSE
2 - TUBE NUT
3 - ROUTING BRACKET SCREW

(6) Remove brake drum. (Refer to 5 - BRAKES/HYDRAULIC/MECHANICAL/DRUM - REMOVAL)

(7) Remove hub and bearing dust cap, hub and bearing assembly, and brake shoes from support plate. (Refer to 5 - BRAKES/HYDRAULIC/MECHANICAL/BRAKE PADS/SHOES - REMOVAL)

(8) Disengage and remove parking brake cable from support plate. This can be easily accomplished by placing a 13 mm box wrench over cable housing retainer (Fig. 65), compressing retainer fingers, then pulling cable out rear of support plate.

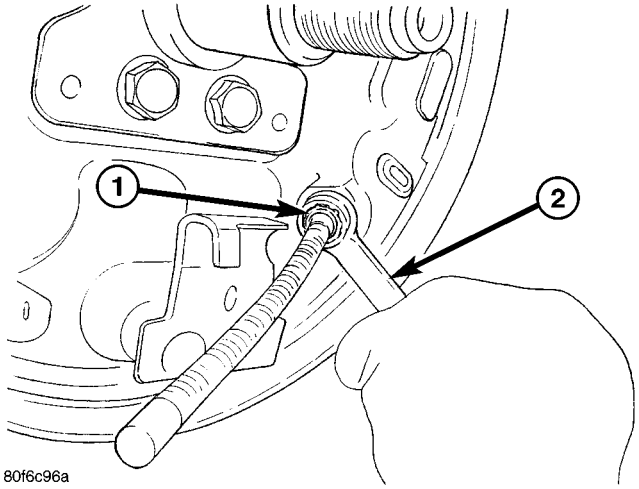

Fig. 65 Using Wrench To Release Cable

1 - CABLE RETAINER
2 - 13 MM BOX WRENCH

(9) Remove wheel cylinder mounting bolts (Fig. 66).

(10) Remove wheel cylinder and seal from support plate.

(11) Remove 4 bolts securing support plate to knuckle.

(12) Remove support plate.

INSTALLATION

(1) Install support plate over knuckle spindle.

(2) Install four support plate mounting bolts. Tighten mounting bolts to 61 N·m (45 ft. lbs.) torque.

(3) Install seal on mounting surface of wheel cylinder.

(4) Install wheel cylinder on support plate (Fig. 66). Install and tighten mounting bolts to 13 N·m (115 in. lbs.) torque.

(5) Insert parking brake cable into support plate. Push cable housing into hole until retainer fingers lock into place.

(6) Lubricate six shoe contact areas on support plate and anchor using Mopar® Brake Lubricant or equivalent.

(7) Install brake shoes, hub and bearing, and hub and bearing dust cap. (Refer to 5 - BRAKES/HYDRAULIC/MECHANICAL/BRAKE PADS/SHOES - REMOVAL)

(8) Adjust brake shoes to drum diameter using brake shoe gauge. (Refer to 5 - BRAKES/HYDRAULIC/MECHANICAL/BRAKE PADS/SHOES - ADJUSTMENTS)

(9) Install brake drum.(Refer to 5 - BRAKES/HYDRAULIC/MECHANICAL/DRUM - INSTALLATION)

SUPPORT PLATE (Continued)

(10) Attach flex hose routing bracket to support plate (Fig. 64). Tighten routing bracket screw to 13 N·m (115 in. lbs.) torque.

(11) Thread flex hose tube nut into wheel cylinder port (Fig. 64). Tighten tube nut to 17 N·m (145 in. lbs.) torque.

(12) Install tire and wheel assembly. Tighten wheel mounting nuts to 135 N·m (100 ft. lbs.) torque.

(13) Slowly rotate wheel and verify that brake drum **lightly** drags on shoes.

(14) Lower vehicle.

(15) Remove brake pedal depressor (holding) tool.

(16) Bleed affected wheel cylinder/circuit as necessary. (Refer to 5 - BRAKES - STANDARD PROCEDURE)

(17) Road test vehicle stopping in both forward and reverse directions. Automatic-adjuster will continue to adjust brakes as necessary during road test.

WHEEL CYLINDER

REMOVAL

NOTE: Before proceeding, (Refer to 5 - BRAKES - WARNING)(Refer to 5 - BRAKES - CAUTION).

CAUTION: If wheel cylinder is leaking and brake lining material is saturated with fluid, brake shoes must be replaced along with wheel cylinder.

NOTE: Make sure parking brake is in “released” position before raising vehicle.

(1) Depress brake pedal past its first inch of travel and hold it in this position using a brake pedal depressor (holding) tool. This is done to isolate master cylinder from brake hydraulic system disallowing brake fluid to completely drain out of brake fluid reservoir once brake flex hose is disconnected.

(2) Raise vehicle. (Refer to LUBRICATION & MAINTENANCE/HOISTING - STANDARD PROCEDURE)

(3) Remove tire and wheel assembly.

(4) Unthread flex hose tube nut at wheel cylinder and remove hose (Fig. 64). Cap end of hose.

(5) Remove brake drum. (Refer to 5 - BRAKES/HYDRAULIC/MECHANICAL/DRUM - REMOVAL)

(6) Remove wheel cylinder mounting bolts (Fig. 66).

(7) Carefully remove wheel cylinder and seal from between brake shoes and support plate.

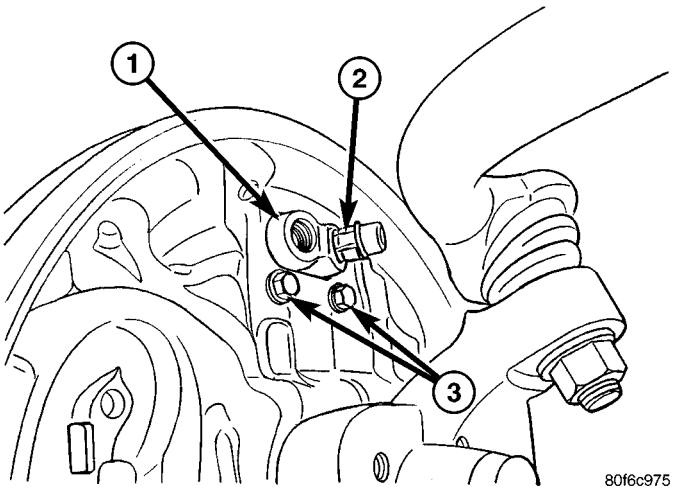

Fig. 66 Wheel Cylinder Mounting

1 - WHEEL CYLINDER
2 - BLEEDER SCREW
3 - MOUNTING BOLTS

INSTALLATION

(1) Install seal on mounting surface of wheel cylinder.

(2) Install wheel cylinder between brake shoes on support plate (Fig. 66). Install and tighten mounting bolts to 13 N·m (115 in. lbs.) torque.

(3) Adjust brake shoes to drum diameter using brake shoe gauge. (Refer to 5 - BRAKES/HYDRAULIC/MECHANICAL/BRAKE PADS/SHOES - ADJUSTMENTS)

(4) Install brake drum.(Refer to 5 - BRAKES/HYDRAULIC/MECHANICAL/DRUM - INSTALLATION)

(5) Thread flex hose tube nut into wheel cylinder port (Fig. 64). Tighten tube nut to 17 N·m (145 in. lbs.) torque.

(6) Install tire and wheel assembly. Tighten wheel mounting nuts to 135 N·m (100 ft. lbs.) torque.

(7) Slowly rotate wheel and verify that brake drum **lightly** drags on shoes.

(8) Lower vehicle.

(9) Remove brake pedal depressor (holding) tool.

(10) Bleed affected wheel cylinder/circuit as necessary. (Refer to 5 - BRAKES - STANDARD PROCEDURE)

(11) Road test vehicle stopping in both forward and reverse directions. Automatic-adjuster will continue to adjust brakes as necessary during road test.

PARKING BRAKE

ADJUSTMENTS

ADJUSTMENT - PARKING BRAKE

This vehicle uses a bent nail type park brake cable tension equalizer (Fig. 67). The bent nail tension equalizer it to be used only one time to set the park brake cable tension. If the park brake cables require adjustment during the life of the vehicle, a **NEW** tension equalizer **MUST** be installed before doing the park cable adjustment procedure.

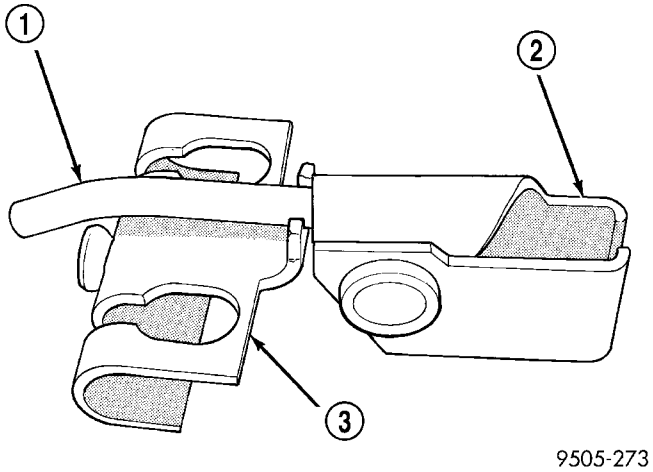

Fig. 67 Bent Nail Park Brake Cable Tension Equalizer

1 - BENT NAIL
2 - PARK BRAKE LEVER OUTPUT CABLE ATTACHMENT TO TENSION EQUALIZER
3 - REAR PARK BRAKE CABLE ATTACHMENT TO TENSION EQUALIZER

(1) Remove the center floor console. (Refer to 23 - BODY/INTERIOR/FLOOR CONSOLE - REMOVAL)

(2) Lower park brake lever handle.

(3) Loosen adjusting nut (Fig. 68) on park brake cable output cable. This will take tension off output cable, allowing it to be easily removed from tension equalizer.

CAUTION: Discard output cable retaining clip after removing it from park brake cable tension equalizer. Retainer is not to be re-used, a new retainer is to be installed when attaching output cable to tension equalizer.

(4) Using a screwdriver (Fig. 69), unlatch the park brake output cable retainer. Then remove cable retainer from park brake cable tension equalizer.

(5) Remove the park brake cable tension equalizer from the park brake lever output cable and the rear park brake cables (Fig. 70).

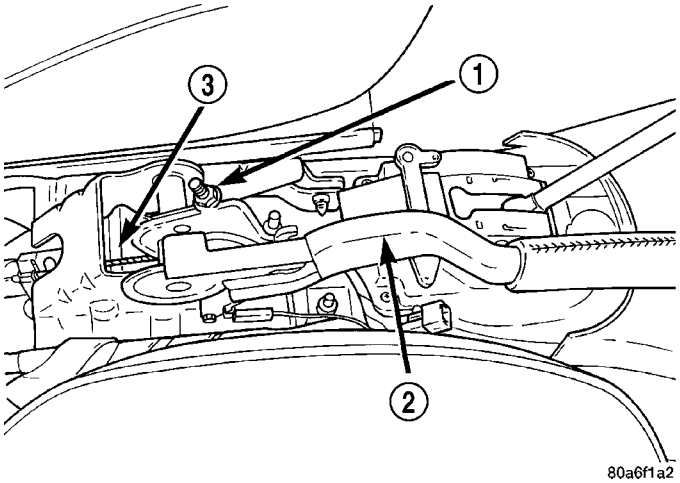

Fig. 68 Park Brake Lever Output Cable Adjustment Nut

1 - ADJUSTING NUT
2 - PARK BRAKE LEVER
3 - PARK BRAKE LEVER OUTPUT CABLE

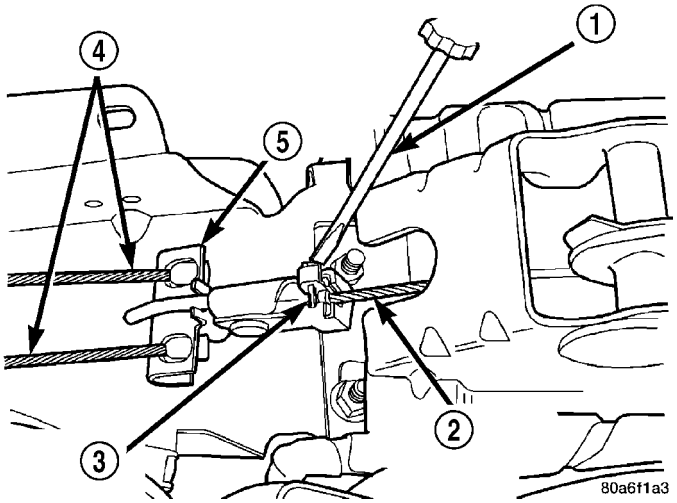

Fig. 69 Output Cable To Equalizer Retaining Clip

1 - SCREWDRIVER
2 - PARK BRAKE LEVER OUTPUT CABLE
3 - CABLE RETAINER
4 - REAR PARK BRAKE CABLES
5 - PARK BRAKE CABLE TENSION EQUALIZER

CAUTION: A new cable tension equalizer must be installed when adjusting park brake cable tension.

(6) Install a **NEW** park brake cable tension equalizer on the park brake lever output cable and rear park brake cables (Fig. 70).

CAUTION: A new park brake lever output cable retainer must be used when installing output cable on cable tension equalizer. Cable retainer usage is required to ensure output cable can not separate from tension equalizer.

PARKING BRAKE (Continued)

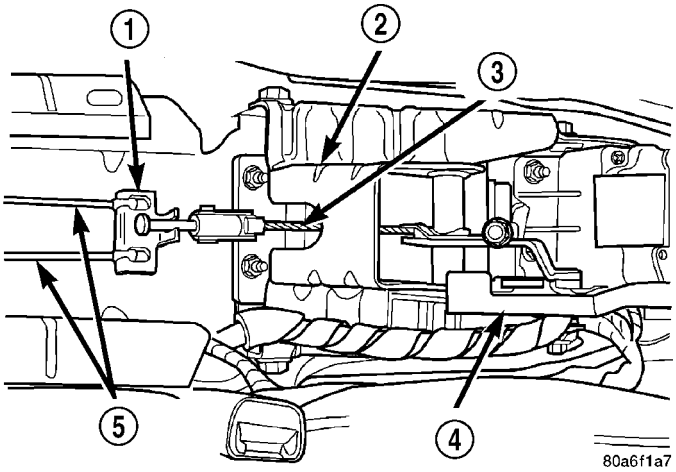

Fig. 70 Park Brake Cable Tension Equalizer

1 - PARK BRAKE CABLE TENSION EQUALIZER
2 - PARK BRAKE MECHANISM
3 - PARK BRAKE LEVER OUTPUT CABLE
4 - PARK BRAKE LEVER
5 - REAR PARK BRAKE CABLES

(7) Install a **new** park brake lever output cable to tension equalizer retaining clip (Fig. 71) on tension equalizer. The cable retainer (Fig. 71) must be closed and securely latched.

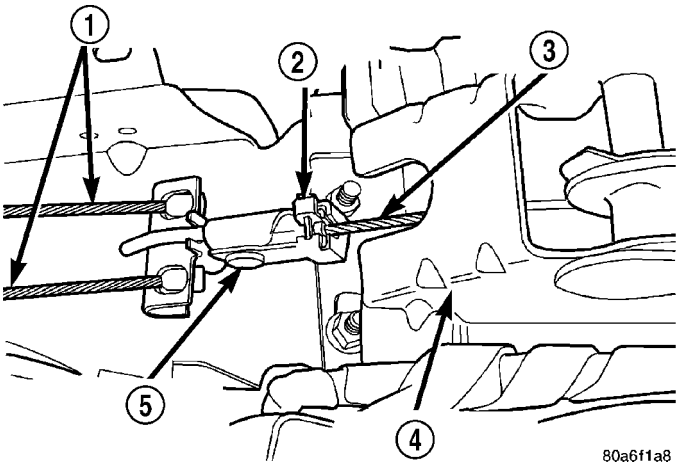

Fig. 71 Cable Retainer Installed On Tension Equalizer

1 - REAR PARK BRAKE CABLES
2 - CABLE RETAINING CLIP
3 - PARKING BRAKE MECHANISM OUTPUT CABLE
4 - PARK BRAKE MECHANISM
5 - PARK BRAKE CABLE TENSION EQUALIZER

(8) Adjust cable tension for the parking brake system using the following steps.

- Position park brake lever so it is in the fully released position.
- Tighten the adjusting nut on the parking brake lever output cable until 26 millimeters of thread is out past top edge of adjustment nut (Fig. 72).
- Actuate the parking brake lever to its fully applied position (15 clicks) 1 time and then reposition the lever to its fully released position.

NOTE: Actuating the parking brake lever to its fully applied position one time after tightening the adjustment nut will yield (stretch) the bent nail portion of the tension equalizer approximately 1/4 inch. This process will correctly set the parking brake cable tension.

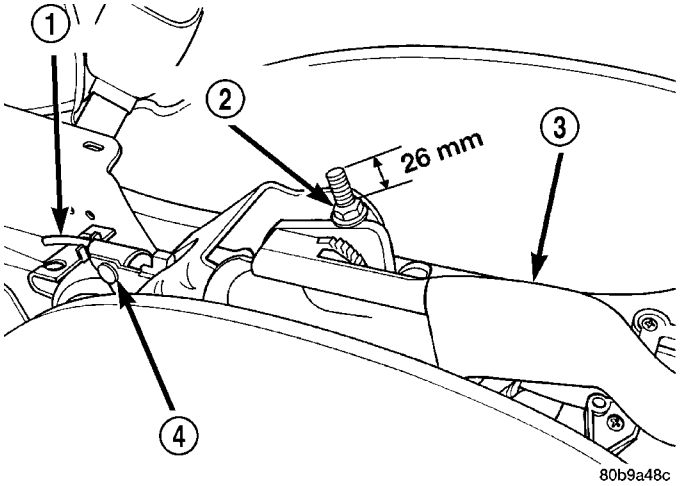

Fig. 72 Parking Brake Adjustment

1 - BENT NAIL
2 - ADJUSTING NUT
3 - PARKING BRAKE LEVER
4 - PARKING BRAKE CABLE TENSION EQUALIZER

(9) Check the rear wheels of the vehicle; they should rotate freely without dragging.

(10) After the park brake cable tension has been properly adjusted, check for free play in park brake lever. Park brake hand lever should feel firm at all clicks, with a maximum of 15 clicks of lever travel possible.

(11) Install the center floor console. (Refer to 23 - BODY/INTERIOR/FLOOR CONSOLE - INSTALLATION)

CABLES - PARKING BRAKE

REMOVAL

For servicing either the left or right rear parking brake cable, follow the procedure as listed below.

(1) Remove center floor console. (Refer to 23 - BODY/INTERIOR/FLOOR CONSOLE - REMOVAL)

(2) Lower park brake lever handle.

(3) Loosen adjusting nut (Fig. 73) on park brake cable output cable. This will take tension off park brake cables, allowing rear park brake cables to be easily removed from tension equalizer.

CABLES - PARKING BRAKE (Continued)

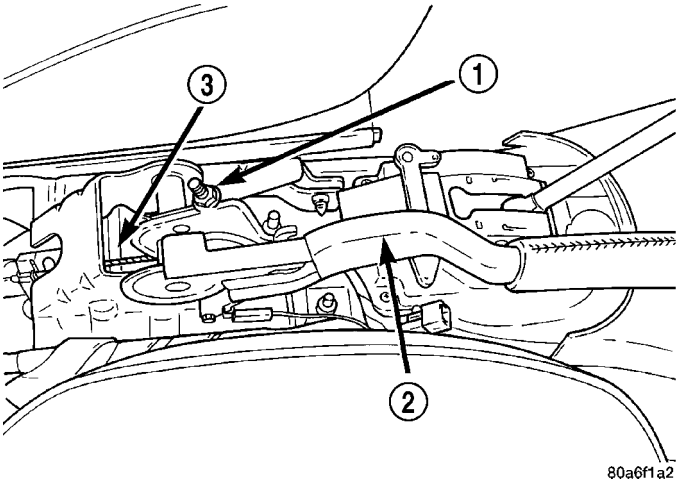

Fig. 73 Park Brake Lever Output Cable Adjustment Nut

1 - ADJUSTING NUT
2 - PARK BRAKE LEVER
3 - PARK BRAKE LEVER OUTPUT CABLE

(4) Remove parking brake cable requiring service from the parking brake cable tension equalizer (Fig. 74).

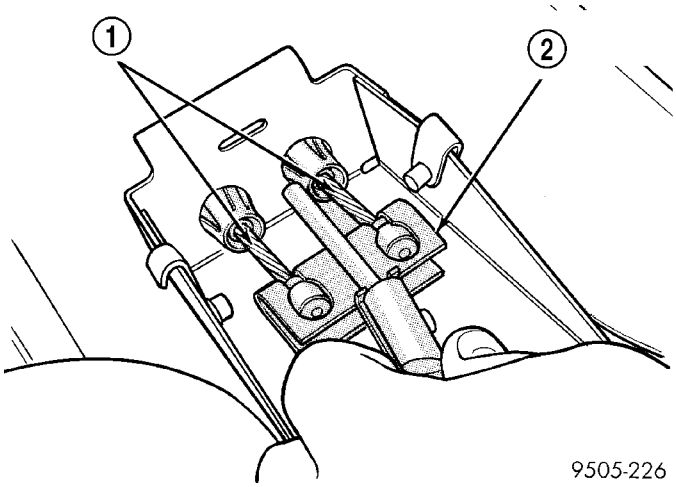

Fig. 74 Rear Park Brake Cables At Tension

1 - REAR PARK BRAKE CABLES
2 - PARK BRAKE CABLE TENSION EQUALIZER

(5) Remove rear seat cushion from vehicle. (Refer to 23 - BODY/SEATS/SEAT CUSHION - REMOVAL)

(6) Remove scuff plates from right and left rear door sills. Scuff plates are attached to door sills using clips on bottom of scuff plates. Remove by carefully prying scuff plate retaining clips out of door sills.

(7) Fold rear carpeting forward to expose park brake cables.

(8) Install 12 point 1/2 inch or 13 mm box wrench over parking brake cable retainer as indicated (Fig. 75). This will compress tabs on parking brake cable retainer allowing cable to be removed from console bracket. From under carpet, grasp park brake cable housing and pull cable straight out of console bracket.

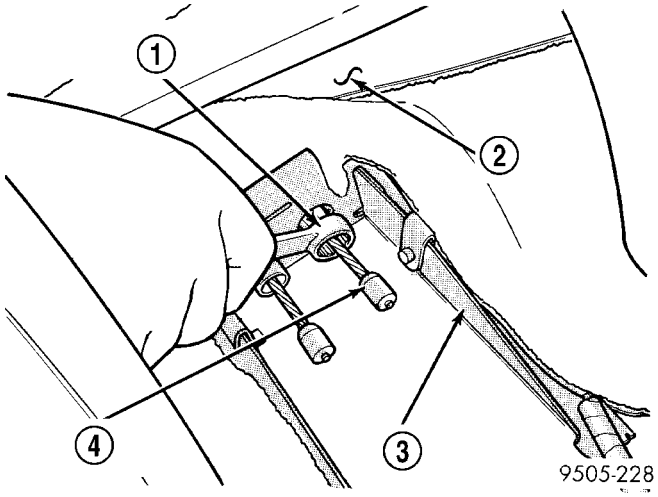

Fig. 75 Compressing Park Brake Cable Retaining Tabs

1 - BOX END WRENCH
2 - VEHICLE CARPETING
3 - CONSOLE BRACKET
4 - REAR PARK BRAKE CABLE

(9) Raise vehicle. (Refer to LUBRICATION & MAINTENANCE/HOISTING - STANDARD PROCEDURE)

(10) Remove rear wheel and tire assembly.

(11) On vehicles with rear disc brakes, remove caliper, rotor, hub and bearing, and parking brake shoes. (Refer to 5 - BRAKES/PARKING BRAKE/SHOES - REMOVAL)

(12) On vehicles with rear drum brakes, remove hub and bearing dust cap and retaining nut, then slide hub and bearing off spindle.

(13) Remove parking brake cable from parking brake actuating lever (Fig. 76).

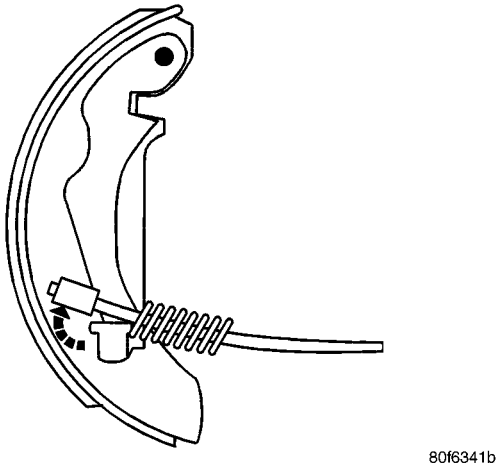

Fig. 76 Cable Removal From Lever

CABLES - PARKING BRAKE (Continued)

(14) Remove parking brake cable from rear disc brake adapter or drum brake support plate. If access allows, place a 1/2 inch or 13 mm box wrench over cable housing and compress locking tabs on cable retainer (Fig. 77). If access does not allow, a screwdriver may be used to press each tab in individually while light pulling tension is applied to cable from rear. Once all tabs are compressed, pull cable out of adapter/plate.

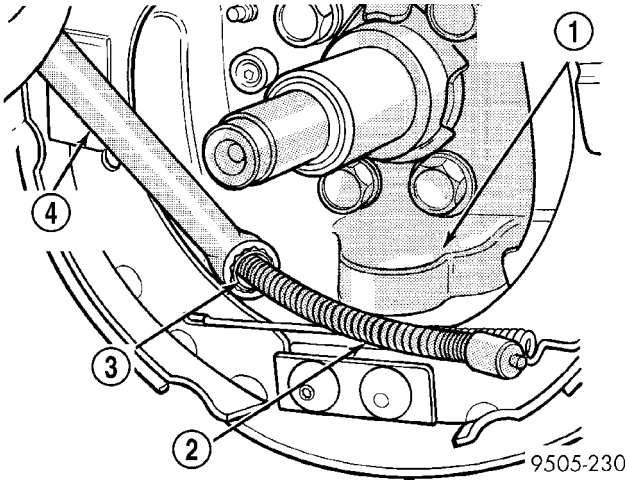

Fig. 77 Cable Removal (Typical)

1 - REAR BRAKE SUPPORT PLATE
2 - PARK BRAKE CABLE
3 - PARK BRAKE CABLE RETAINER
4 - BOX END WRENCH

(15) Remove fasteners securing two cable routing clips to frame rail.

(16) Remove parking brake cable and sealing grommet (Fig. 78) from floor pan of vehicle.

INSTALLATION

For servicing either the left or right parking brake cable, follow the procedure as listed below.

(1) Install parking brake cable into floor pan of vehicle making sure sealing grommet is installed in floor pan as far as possible to insure a proper seal (Fig. 78).

(2) Install parking brake cable into rear disc brake adapter or drum support plate. Once installed in place, be sure locking tabs on cable housing retainer are expanded.

NOTE: Parking brake cable routing and routing clips are different on right and left sides of vehicle. Be sure correct routing clips are installed on correct side of vehicle.

(3) Attach two parking brake cable routing clips on rear frame rail. Install and securely tighten routing clip attaching screws.

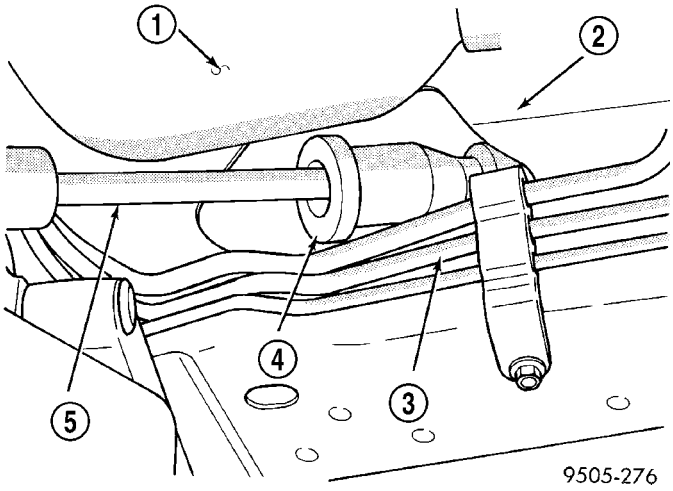

Fig. 78 Park Brake Cable Removal/Installation At Floor Pan

1 - FUEL TANK
2 - VEHICLE FLOOR PAN
3 - FUEL LINES
4 - SEALING GROMMET
5 - PARK BRAKE CABLE

(4) Install end of cable on parking brake actuating lever (Fig. 79). Guide spring beneath retaining tab on lever.

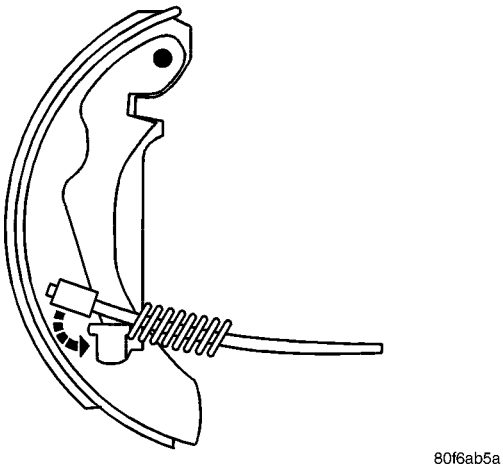

Fig. 79 Cable Installation To Lever

(5) On vehicles with rear disc brakes, install and adjust parking brake shoes, install hub and bearing, rotor and caliper. (Refer to 5 - BRAKES/PARKING BRAKE/SHOES - INSTALLATION)

(6) On vehicles with rear drum brakes:

(a) Insert cable into cable guide attached to anchor retaining plate.

(b) Slide hub and bearing onto spindle. Install retaining nut and tighten to 250 N·m (185 ft. lbs.) torque.

(c) Install hub and bearing dust cap.

CABLES - PARKING BRAKE (Continued)

(7) Install rear wheel and tire assembly on vehicle. Tighten all wheel lug nuts in crisscross pattern to one-half specified torque. Then repeat pattern, fully tightening nuts to 135 N·m (100 ft. lbs.).

(8) Lower vehicle.

(9) Grasp parking brake cable to floor pan seal grommet by hand, and pull it into floor pan to ensure seal grommet is fully seated into floor pan.

(10) Route parking brake cable under carpeting and up to cable hole in console bracket on floor pan.

(11) Install parking brake cable into console bracket (Fig. 80). Once installed, be sure locking tabs on cable retainer have expanded out to hold cable in console bracket.

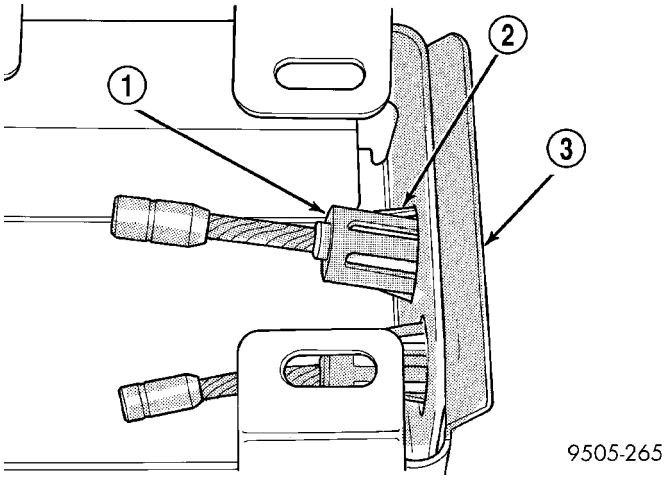

Fig. 80 Park Brake Cable Installed In Console Bracket

1 - PARK BRAKE CABLE RETAINER
2 - RETAINING TABS
3 - PARK BRAKE CABLE RETAINING BRACKET

CAUTION: Discard output cable retaining clip and tension equalizer after removing it from the park brake output cable. A new tension equalizer and retaining clip is to be used when installing a new rear park brake cable.

(12) Using a screwdriver (Fig. 81), unlatch the parking brake output cable retainer. Then remove cable retainer and park brake cable tension equalizer from park brake lever output cable **and discard components.**

CAUTION: A new cable tension equalizer must be installed when replacing a rear park brake cable. The new cable tension equalizer is required to correctly adjust park brake cable tension after installing a new rear park brake cable.

(13) Install a NEW park brake cable tension equalizer on park brake lever output cable and rear park brake cables (Fig. 82).

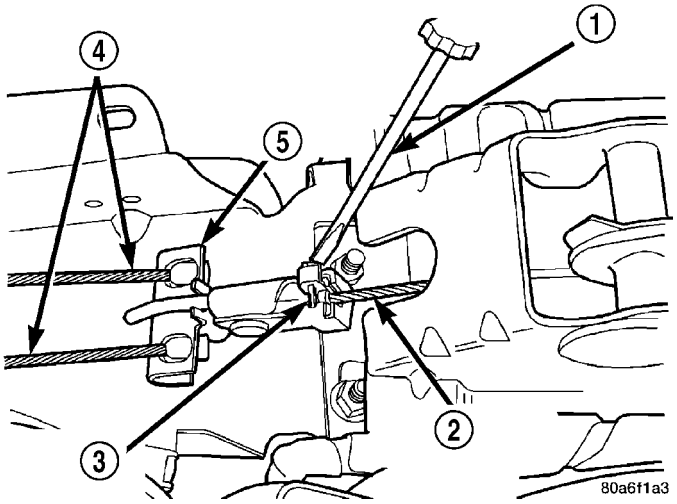

Fig. 81 Output Cable To Equalizer Retaining Clip

1 - SCREWDRIVER
2 - PARK BRAKE LEVER OUTPUT CABLE
3 - CABLE RETAINER
4 - REAR PARK BRAKE CABLES
5 - PARK BRAKE CABLE TENSION EQUALIZER

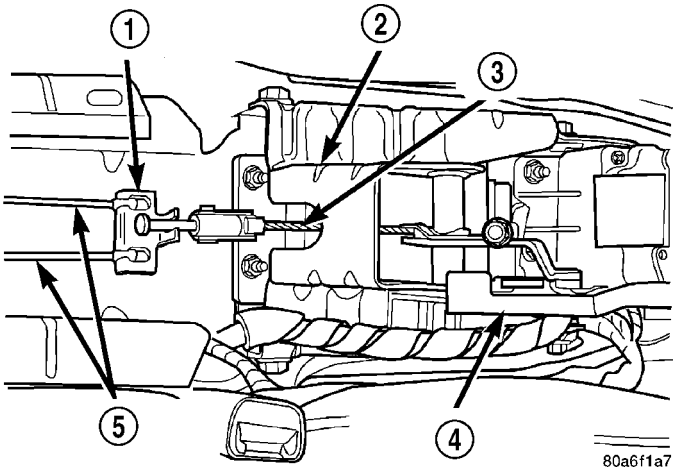

Fig. 82 Park Brake Cable Tension Equalizer

1 - PARK BRAKE CABLE TENSION EQUALIZER
2 - PARK BRAKE MECHANISM
3 - PARK BRAKE LEVER OUTPUT CABLE
4 - PARK BRAKE LEVER
5 - REAR PARK BRAKE CABLES

CAUTION: A new retainer (Fig. 83) must be used when installing the park brake mechanism output cable on the cable tension equalizer. Cable retainer usage is required to ensure output cable can not separate from tension equalizer.

(14) Install a NEW park brake lever output cable to tension equalizer retaining clip (Fig. 83) on tension equalizer. Cable retainer must be closed and securely latched.

(15) Adjust cable tension for parking brake system using following steps:

CABLES - PARKING BRAKE (Continued)

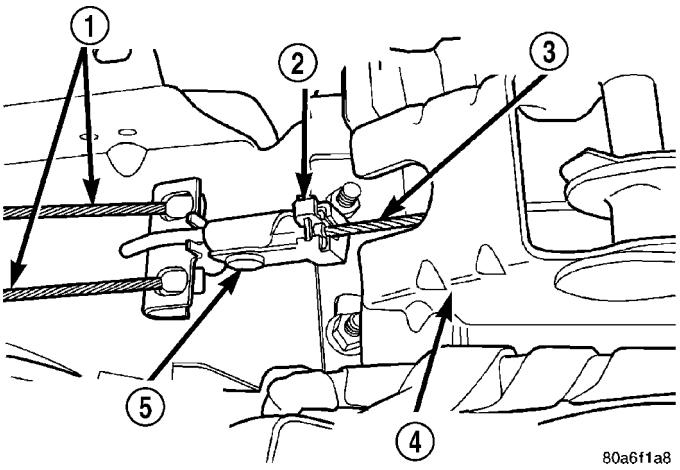

Fig. 83 Cable Retainer Installed On Tension Equalizer

1 - REAR PARK BRAKE CABLES
2 - CABLE RETAINING CLIP
3 - PARKING BRAKE MECHANISM OUTPUT CABLE
4 - PARK BRAKE MECHANISM
5 - PARK BRAKE CABLE TENSION EQUALIZER

- Position parking brake lever so it is in the fully released position.
- Tighten adjusting nut on parking brake lever output cable until 26 millimeters of thread is out past top edge of adjustment nut (Fig. 84).
- Actuate parking brake lever to its fully applied position (15 clicks) 1 time and then reposition lever to its fully released position.

NOTE: Actuating the parking brake lever to its fully applied position one time after tightening the adjustment nut will yield (stretch) the bent nail portion of the tension equalizer approximately 1/4 inch. This process will correctly set the parking brake cable tension.

(16) Check rear wheels of vehicle with parking brake lever fully released; they should rotate freely without dragging.

(17) After parking brake cable tension has been properly adjusted, check for free play in parking brake lever. Parking brake hand lever should feel firm at all clicks, with a maximum of 15 clicks of lever travel possible.

(18) Install center floor console. (Refer to 23 - BODY/INTERIOR/FLOOR CONSOLE - INSTALLATION)

(19) Install rear carpeting.

(20) Install both rear door sill plate moldings by snapping them onto rear door sills.

(21) Install lower rear seat cushion.

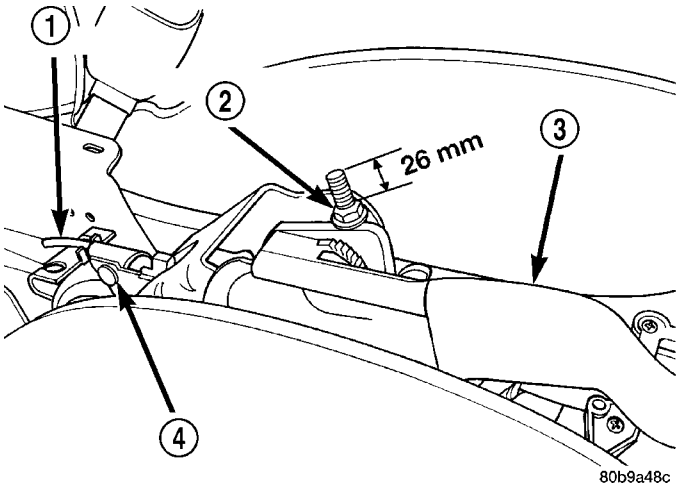

Fig. 84 Parking Brake Adjustment

1 - BENT NAIL
2 - ADJUSTING NUT
3 - PARKING BRAKE LEVER
4 - PARKING BRAKE CABLE TENSION EQUALIZER

LEVER - PARKING BRAKE

REMOVAL

(1) Remove the floor console. (Refer to 23 - BODY/INTERIOR/FLOOR CONSOLE - REMOVAL)

(2) Lower parking brake lever handle.

(3) Loosen adjusting nut on park brake lever output cable (Fig. 85). This will take tension off output cable, allowing it to be easily removed from tension equalizer.

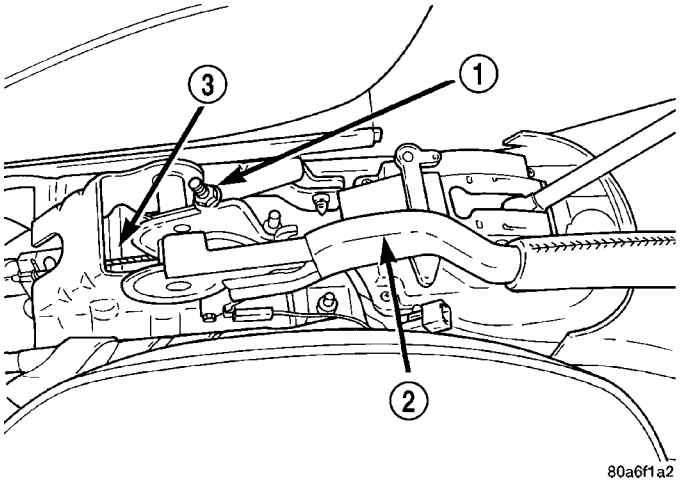

Fig. 85 Park Brake Lever Output Cable Adjustment Nut (Typical)

1 - ADJUSTING NUT
2 - PARK BRAKE LEVER
3 - PARK BRAKE LEVER OUTPUT CABLE

LEVER - PARKING BRAKE (Continued)

CAUTION: Discard output cable retaining clip after removing it from park brake cable tension equalizer. Retainer is not to be re-used, a new retainer is to be installed when attaching output cable to tension equalizer.

(4) Using a screwdriver (Fig. 86), unlatch the park brake output cable retainer, then remove cable retainer from park brake cable tension equalizer.

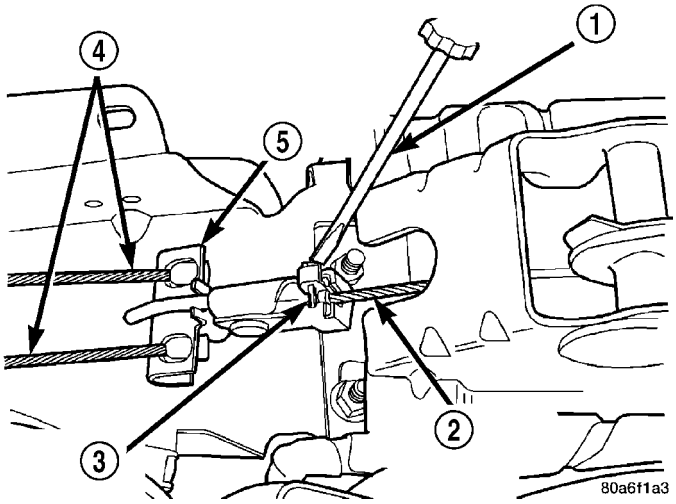

Fig. 86 Output Cable-To-Equalizer Retaining Clip

1 - SCREWDRIVER
2 - PARK BRAKE LEVER OUTPUT CABLE
3 - CABLE RETAINER
4 - REAR PARK BRAKE CABLES
5 - PARK BRAKE CABLE TENSION EQUALIZER

(5) Remove the park brake cable tension equalizer from the park brake lever output cable.

(6) Remove the electrical connector from the ground switch on the park brake lever mechanism.

(7) Unclip the wiring harness from the park brake mechanism bracket.

(8) Remove the 4 bolts attaching the park brake lever mechanism bracket (Fig. 87).

(9) Remove the park brake lever mechanism from the vehicle.

INSTALLATION

(1) Place the parking brake lever mechanism on the console bracket. Install the 4 bolts mounting the park brake lever mechanism to the console bracket (Fig. 87). Tighten the 4 mounting bolts to a torque of 28 N·m (250 in. lbs.).

(2) Install the wiring harness on the park brake mechanism bracket.

(3) Install the electrical connector on the ground switch of the park brake lever mechanism.

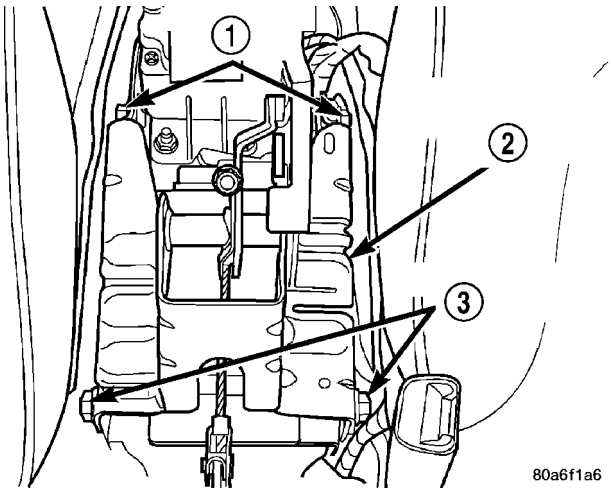

Fig. 87 Park Brake Lever Bracket Mounting

1 - MOUNTING BOLTS
2 - PARK BRAKE MECHANISM BRACKET
3 - MOUNTING BOLTS

CAUTION: A new cable tension equalizer must be installed when replacing the park brake mechanism. The new cable tension equalizer is required to correctly adjust park brake cable tension after installing park brake mechanism.

(4) Install a NEW park brake cable tension equalizer on the park brake lever output cable and rear park brake cables (Fig. 88).

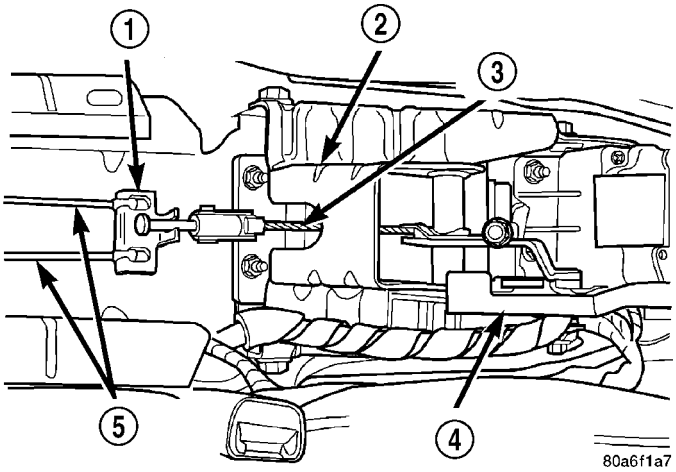

Fig. 88 Park Brake Cable Tension Equalizer

1 - PARK BRAKE CABLE TENSION EQUALIZER
2 - PARK BRAKE MECHANISM
3 - PARK BRAKE LEVER OUTPUT CABLE
4 - PARK BRAKE LEVER
5 - REAR PARK BRAKE CABLES

CAUTION: A new park brake lever output cable retainer must be used when installing output cable on cable tension equalizer. Cable retainer usage is required to ensure output cable can not separate from tension equalizer.

LEVER - PARKING BRAKE (Continued)

(5) Install a NEW parking brake lever output cable to tension equalizer retaining clip (Fig. 89) on tension equalizer. The cable retainer must be closed and securely latched.

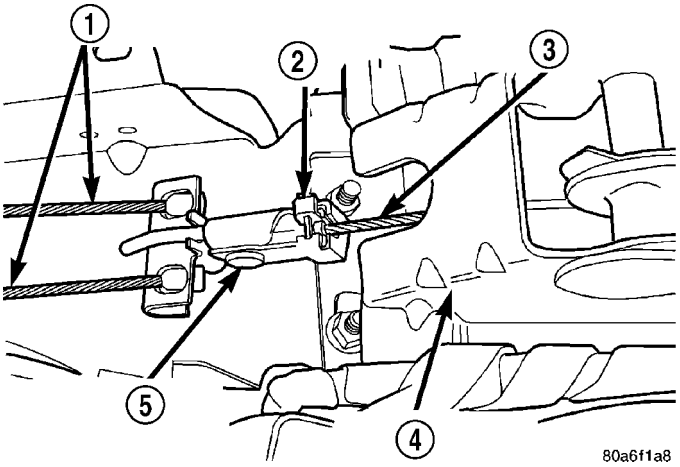

Fig. 89 Cable Retainer Installed On Tension Equalizer

1 - REAR PARK BRAKE CABLES
2 - CABLE RETAINING CLIP
3 - PARKING BRAKE MECHANISM OUTPUT CABLE
4 - PARK BRAKE MECHANISM
5 - PARK BRAKE CABLE TENSION EQUALIZER

(6) Adjust cable tension for the parking brake system using the following steps.

- Position park brake lever so it is in the fully released position.
- Tighten the adjusting nut on the parking brake lever output cable until 26 millimeters of thread is out past top edge of adjustment nut (Fig. 90).
- Actuate the parking brake lever to its fully applied position (15 clicks) 1 time and then reposition the lever to its fully released position.

NOTE: Actuating the parking brake lever to its fully applied position one time after tightening the adjustment nut will yield (stretch) the bent nail portion of the tension equalizer approximately 1/4 inch. This process will correctly set the parking brake cable tension.

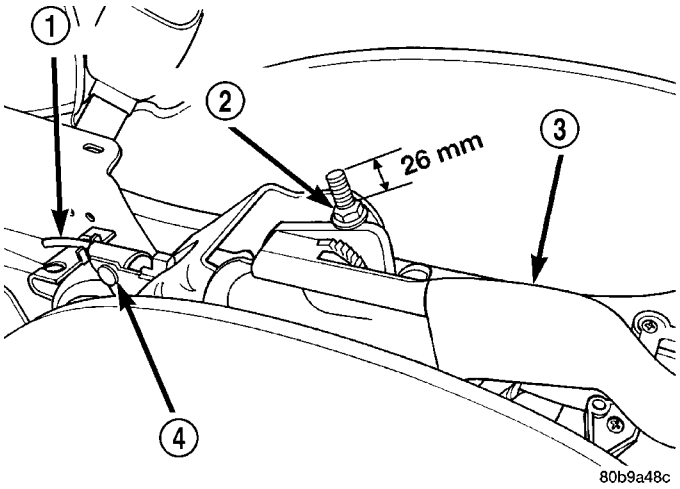

Fig. 90 Parking Brake Adjustment

1 - BENT NAIL
2 - ADJUSTING NUT
3 - PARKING BRAKE LEVER
4 - PARKING BRAKE CABLE TENSION EQUALIZER

(7) Check the rear wheels of the vehicle with the park brake lever fully released, they should rotate freely without dragging.

(8) After the park brake cable tension has been properly adjusted, check for free play in park brake lever. Park brake hand lever should feel firm at all clicks, with a maximum of 15 clicks of lever travel possible.

(9) Install the floor console back in the vehicle. (Refer to 23 - BODY/INTERIOR/FLOOR CONSOLE - INSTALLATION)

SHOES - PARKING BRAKE

REMOVAL

(1) Remove disc brake caliper from adapter and rotor (See Disc Brake Shoe Removal).

(2) Remove rotor from hub/bearing.

(3) Remove dust cap from hub/bearing.

(4) Remove hub/bearing rear retaining nut and washer.

SHOES - PARKING BRAKE (Continued)

(5) Remove hub/bearing from knuckle.

(6) Remove hold down clip from rear park brake shoe (Fig. 91).

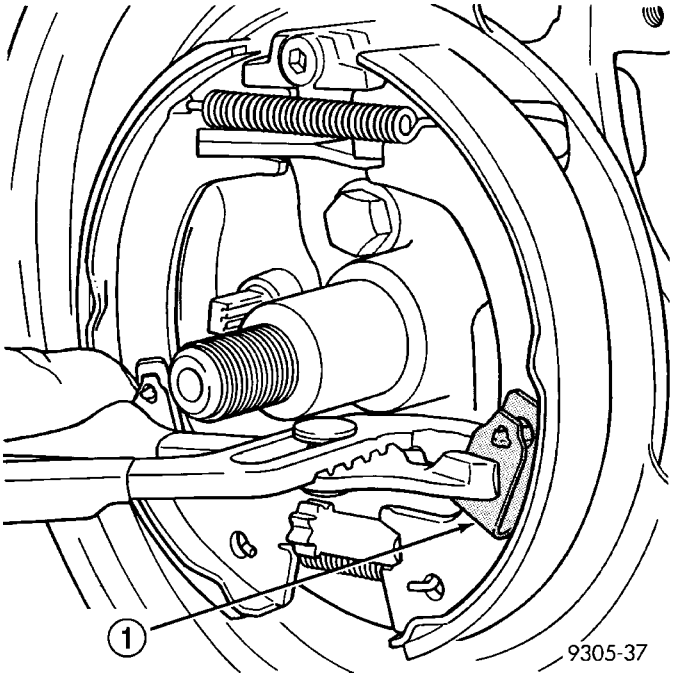

Fig. 91 Rear Park Brake Shoe Hold-Down Clip

1 - HOLD DOWN CLIP

(7) Turn park brake shoe adjuster wheel until adjuster is at its shortest length.

(8) Remove the park brake shoe adjuster from the park brake shoes (Fig. 92).

(9) Remove the lower return spring (Fig. 93) between the park brake shoes.

(10) Pull the rear park brake shoe away from the caliper adapter (Fig. 94). Remove the upper return spring (Fig. 94) from between the park brake shoes.

(11) Remove the hold-down clip from the front park brake shoe (Fig. 95). Then remove front park brake shoe.

INSTALLATION

(1) Install front brake shoe and hold down clip (Fig. 95).

(2) Install the rear park brake shoe and the park brake shoe upper return spring (Fig. 94).

(3) Pull rear brake shoe over anchor block until properly located on adapter.

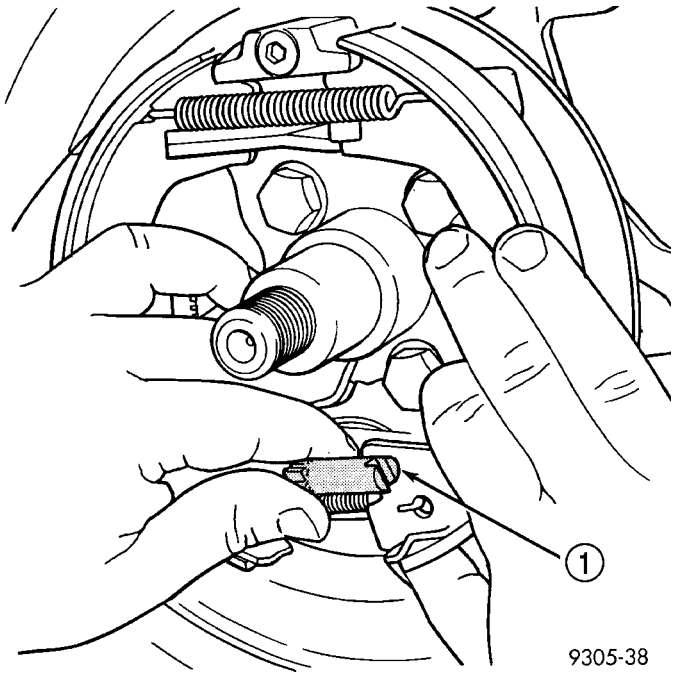

Fig. 92 Park Brake Shoe Adjuster

1 - ADJUSTER

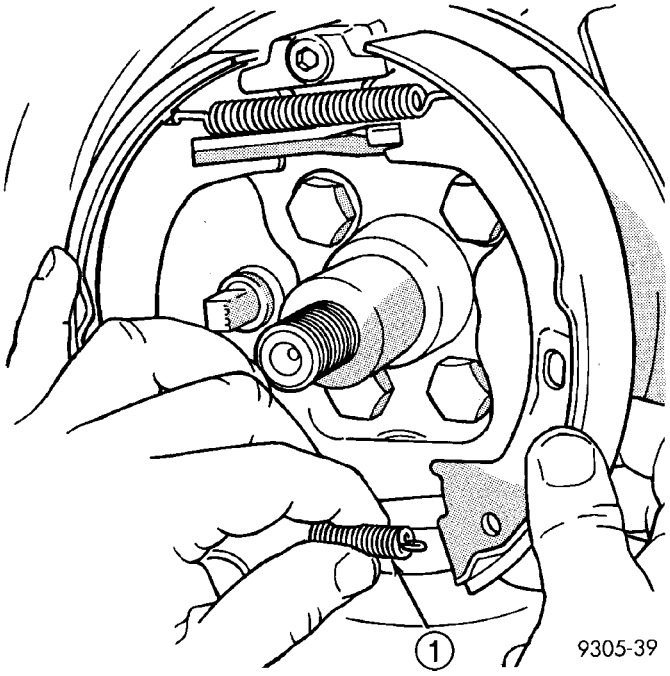

Fig. 93 Brake Shoe Lower Return Spring

1 - LOWER SPRING

SHOES - PARKING BRAKE (Continued)

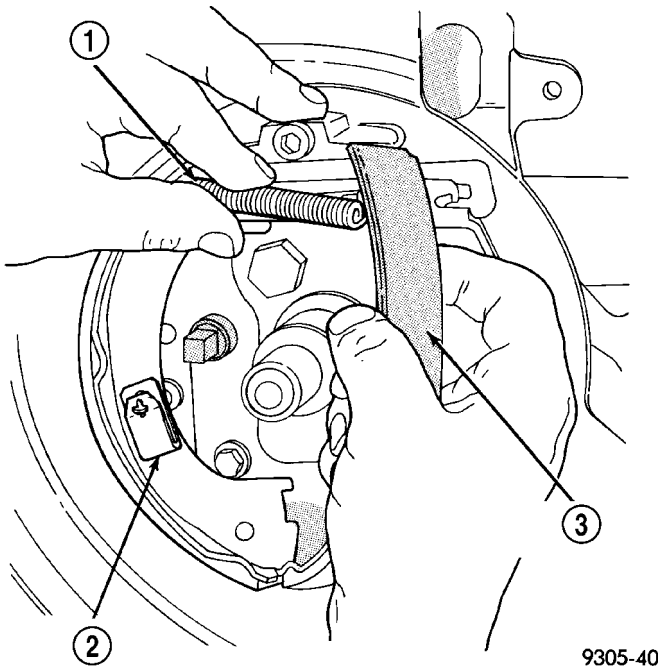

Fig. 94 Brake Shoe and Upper Spring

1 - UPPER SPRING
2 - HOLD DOWN CLIP
3 - REAR PARKING BRAKE SHOE

(4) Install the park brake lower return spring (Fig. 93).

(5) Install the adjuster between the park brake shoes. Adjuster must be installed with the star wheel toward the rear of the vehicle (Fig. 92).

(6) Install hold down clip on rear park brake shoe (Fig. 91).

(7) Adjust park brake shoes to an outside diameter of 171 mm (6.75 inch).

(8) Install hub/bearing on knuckle.

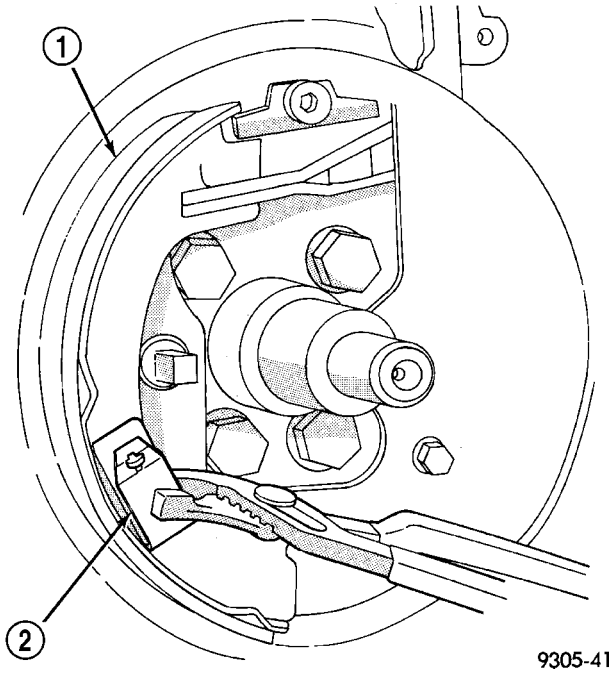

Fig. 95 Front Park Brake Shoe Hold Down Clip

1 - FRONT BRAKE SHOE ASSEMBLY
2 - HOLD DOWN CLIP

(9) Install **A NEW** hub/bearing retaining nut. Tighten the hub/ bearing retaining nut to a torque of 250 N·m (185 ft. lbs.).

(10) Install dust cap on hub/bearing.

(11) Install rotor.

(12) Install rear disc brake caliper on adapter (See Brake Shoe Removal).

(13) Install wheel and tire.

(14) Tighten wheel stud nuts to 135 N·m (100 ft.lbs.).

BRAKES - ABS

TABLE OF CONTENTS

page

BRAKES - ABS
DESCRIPTION
DESCRIPTION - ANTILOCK BRAKES 49
DESCRIPTION - ABS PLUS 49
DESCRIPTION - ELECTRONIC VARIABLE BRAKE PROPORTIONING 49
DESCRIPTION - TRACTION CONTROL 50
OPERATION
OPERATION - ANTILOCK BRAKES 50
OPERATION - ABS PLUS 51
OPERATION - ELECTRONIC VARIABLE BRAKE PROPORTIONING 51
OPERATION - TRACTION CONTROL 51
CAUTION
CAUTIONS 52
DIAGNOSIS AND TESTING - INSPECTION AND ROAD TEST 52
STANDARD PROCEDURE - ANTILOCK BRAKE SYSTEM BLEEDING 53
SPECIFICATIONS
ABS FASTENER TORQUE 54
TONE WHEEL RUNOUT 54
WHEEL SPEED SENSOR AIR GAP 54
FRONT WHEEL SPEED SENSOR
REMOVAL 54
INSTALLATION 55
REAR WHEEL SPEED SENSOR
REMOVAL
REMOVAL - JR27 56
REMOVAL - JR41 56
INSTALLATION
INSTALLATION - JR27 58
INSTALLATION - JR41 58
TONE WHEEL
INSPECTION - TONE WHEEL 58
TRACTION CONTROL SWITCH
REMOVAL 59
INSTALLATION 60
HCU (HYDRAULIC CONTROL UNIT)
DESCRIPTION 60
OPERATION - HYDRAULIC CIRCUITS AND VALVES 60
ICU (INTEGRATED CONTROL UNIT)
DESCRIPTION 66
OPERATION 66
REMOVAL - ICU 66
DISASSEMBLY - ICU 67
ASSEMBLY - ICU 68
INSTALLATION - ICU 68

BRAKES - ABS

DESCRIPTION

DESCRIPTION - ANTILOCK BRAKES

This section covers the Mark 20e Antilock Brake System. This vehicle is available with or without traction control.

The purpose of this four-channel design antilock brake system is to prevent wheel lockup under braking conditions on virtually any type of road surface. Antilock braking is desirable because a vehicle that is stopped without locking the wheels retains directional stability and some steering capability. This allows the driver to retain greater control of the vehicle during braking.

This ABS system has ABS Plus and Electronic Variable Brake Proportioning (EVBP). (Refer to 5 - ABS - BRAKES - DESCRIPTION)

For information on traction control, (Refer to 5 - BRAKES - ABS - TRACTION CONTROL - DESCRIPTION).

DESCRIPTION - ABS PLUS

There is an ABS Plus function built into the ABS CAB. ABS Plus is a brake-on stability enhancement. It is designed to help maintain the directional stability of the vehicle during braking. There are no additional external components required for this function.

DESCRIPTION - ELECTRONIC VARIABLE BRAKE PROPORTIONING

Vehicles equipped with ABS use electronic variable brake proportioning (EVBP) to balance front-to-rear braking. The EVBP is used in place of a rear proportioning valve. The EVBP system uses the ABS system to control the slip of the rear wheels in partial braking range. The braking force of the rear wheels is controlled electronically by using the inlet and outlet valves located in the integrated control unit (ICU).

BRAKES - ABS (Continued)

EVBP activation is invisible to the customer since there is no pump motor noise or brake pedal feedback.

DESCRIPTION - TRACTION CONTROL

Traction control reduces wheel slip and maintains traction at the driving wheels at speeds below 56 km/h (35 mph) when road surfaces are wet or snow covered. The traction control system reduces wheel slip by braking the wheel that is losing traction.

OPERATION

OPERATION - ANTILOCK BRAKES

There are a few performance characteristics of the Mark 20e Antilock Brake System that may at first seem abnormal, but in fact are normal. These characteristics are described below.

NORMAL BRAKING

Under normal braking conditions, the ABS functions the same as a standard base brake system with a diagonally split master cylinder and conventional vacuum assist.

ABS BRAKING

ABS operation is available at all vehicle speeds above 5–8 km/h (3–5 mph). If a wheel locking tendency is detected during a brake application, the brake system enters the ABS mode. During ABS braking, hydraulic pressure in the four wheel circuits is modulated to prevent any wheel from locking. Each wheel circuit is designed with a set of electric solenoids to allow modulation and each wheel receives its own separate electrical signal. Wheel lockup may be perceived at the very end of an ABS stop and is considered normal.

During an ABS stop, the brakes hydraulic system is still diagonally split. However, the brake system pressure is further split into four control channels. During antilock operation of the vehicle's brake system, the front wheels are controlled independently and are on two separate control channels, and the rear wheels are controlled together for better vehicle stability.

The system can build and release pressure at each wheel, depending on signals generated by the wheel speed sensors (WSS) at each wheel and received at the controller antilock brake (CAB).

NOISE AND BRAKE PEDAL FEEL

During ABS braking, some brake pedal movement may be felt. In addition, ABS braking will create ticking, popping, or groaning noises heard by the driver. This is normal and is due to pressurized fluid being transferred between the master cylinder and the brakes. If ABS operation occurs during hard braking, some pulsation may be felt in the vehicle body due to fore and aft movement of the suspension as brake pressures are modulated.

At the end of an ABS stop, ABS is turned off when the vehicle is slowed to a speed of 5–7 km/h (3–4 mph). There may be a slight brake pedal drop anytime that the ABS is deactivated, such as at the end of the stop when the vehicle speed is less than 5 km/h (3 mph) or during an ABS stop where ABS is no longer required. These conditions exist when a vehicle is being stopped on a road surface with patches of ice, loose gravel, or sand on it. Also, stopping a vehicle on a bumpy road surface activates ABS because of the wheel hop caused by the bumps.

TIRE NOISE AND MARKS

Although the ABS system prevents complete wheel lockup, some wheel slip is desired in order to achieve optimum braking performance. Wheel slip is defined as follows: 0 percent slip means the wheel is rolling freely and 100 percent slip means the wheel is fully locked. During brake pressure modulation, wheel slip is allowed to reach up to 25–30 percent. This means that the wheel rolling velocity is 25–30 percent less than that of a free rolling wheel at a given vehicle speed. This slip may result in some tire chirping, depending on the road surface. This sound should not be interpreted as total wheel lockup.

Complete wheel lockup normally leaves black tire marks on dry pavement. The ABS will not leave dark black tire marks since the wheel never reaches a fully locked condition. However, tire marks may be noticeable as light patched marks.

START-UP CYCLE

When the ignition is turned on, a popping sound and a slight brake pedal movement may be noticed. The ABS warning indicator lamp will also be on for up to 5 seconds after the ignition is turned on. These conditions occur as part of ABS self-diagnosis check. The popping sound is a result of brief activation of the solenoids in the integrated control unit.

DRIVE-OFF CYCLE

When the vehicle is first driven off, a humming may be heard or felt by the driver at approximately 25–40 km/h (15–25 mph). This is caused by brief activation of the ABS pump/motor and is a normal function of ABS as part of the self-diagnosis check.

PREMATURE ABS CYCLING

Symptoms of premature ABS cycling include: clicking sounds from the solenoid valves; pump/motor running; and pulsations in the brake pedal. Prema-

ture ABS cycling can occur at any braking rate of the vehicle and on any type of road surface. Neither the red BRAKE warning indicator lamp, nor the amber ABS warning indicator lamp, illuminate and no fault codes are stored in the CAB.

Premature ABS cycling is a condition that needs to be correctly assessed when diagnosing problems with the antilock brake system. It may be necessary to use a DRBIII® scan tool to detect and verify premature ABS cycling.

Check the following common causes when diagnosing premature ABS cycling: damaged tone wheels; incorrect tone wheels; damaged steering knuckle wheel speed sensor mounting bosses; loose wheel speed sensor mounting bolts; excessive tone wheel runout; or an excessively large tone wheel-to-wheel speed sensor air gap. Give special attention to these components when diagnosing a vehicle exhibiting premature ABS cycling.

After diagnosing the defective component, repair or replace it as required. When the component repair or replacement is completed, test drive the vehicle to verify that premature ABS cycling has been corrected.

OPERATION - ABS PLUS

When the brake pedal is depressed far enough to actuate the brake lamp switch, the CAB monitors and compares the speeds of the front (driving) wheels. It senses vehicle speed, brake application, and detects vehicle cornering and applies the brakes selectively to stabilize the vehicle.

OPERATION - ELECTRONIC VARIABLE BRAKE PROPORTIONING

Upon entry into EVBP the inlet valve for the rear brake circuit is switched on so that the fluid supply from the master cylinder is shut off. In order to decrease the rear brake pressure, the outlet valve for the rear brake circuit is pulsed. This allows fluid to enter the low pressure accumulator (LPA) in the hydraulic control unit (HCU) resulting in a drop in fluid pressure to the rear brakes. In order to increase the rear brake pressure, the outlet valve is switched off and the inlet valve is pulsed. This increases the pressure to the rear brakes. This back-and-forth process will continue until the required slip difference is obtained. At the end of EVBP braking (brakes released) the fluid in the LPA drains back to the master cylinder by switching on the outlet valve and draining through the inlet valve check valve. At the same time the inlet valve is switched on in case of another brake application.

The EVBP will remain functional during many ABS fault modes. If both the red BRAKE and amber ABS warning indicators are illuminated, the EVBP may not be functioning.

OPERATION - TRACTION CONTROL

The traction control system monitors wheel speed. During acceleration, if the CAB detects front (drive) wheel slip and the brakes are not applied, the system enters traction control mode. Traction control operation proceeds in the following order:

(1) Close the normally open isolator valves.

(2) Start the pump/motor and supply volume and pressure to the front (drive) hydraulic circuit. (The pump/motor runs continuously during traction control operation.)

(3) Open and close the build and decay valves to maintain minimum wheel slip and maximum traction.

The cycling of the build and decay valves during traction control is similar to that during antilock braking, except the valves work to control wheel spin by applying the brakes, whereas the ABS function is to control wheel skid by releasing the brakes.

HYDRAULIC SHUTTLE VALVES

Two hydraulic shuttle valves allow pressure and volume to return to the master cylinder reservoir when not consumed by the build and decay valves. These valves are necessary because the pump/motor supplies more volume than the system requires.

If the brakes are applied at anytime during a traction control cycle, the brake lamp switch triggers the CAB to switch off traction control.

TRACTION CONTROL FUNCTION LAMPS

The traction control function lamp illuminates during a traction control cycle.

The traction control system is enabled at each ignition cycle. It may be turned off by depressing the traction control switch button. The traction control function lamp illuminates immediately upon depressing the button.

If the CAB calculates that the brake temperatures are high, the traction control system becomes inoperative until a time-out period has elapsed. During this “thermo-protection mode,” the traction control function lamp illuminates; note that no trouble code is registered.

In the event that a system fault occurs thus illuminating the ABS warning indicator lamp, the traction control function lamp will also illuminate.

BRAKES - ABS (Continued)

CAUTION

CAUTIONS

The ABS uses an electronic control module, the CAB. This module is designed to withstand normal current draws associated with vehicle operation. Care must be taken to avoid overloading the CAB circuits.

CAUTION: In testing for open or short circuits, do not ground or apply voltage to any of the circuits unless instructed to do so for a diagnostic procedure.

CAUTION: These circuits should only be tested using a high impedance multi-meter or the DRBIII® scan tool as described in this section. Power should never be removed or applied to any control module with the ignition in the ON position. Before removing or connecting battery cables, fuses, or connectors, always turn the ignition to the OFF position.

CAUTION: The CAB 24-way connector should never be connected or disconnected with the ignition switch in the ON position.

CAUTION: This vehicle utilizes active wheel speed sensors. Do not apply voltage to wheel speed sensors at any time.

CAUTION: Use only factory wiring harnesses. Do not cut or splice wiring to the brake circuits. The addition of aftermarket electrical equipment (car phone, radar detector, citizen band radio, trailer lighting, trailer brakes, etc.) on a vehicle equipped with antilock brakes may affect the function of the antilock brake system.

CAUTION: When performing any service procedure on a vehicle equipped with ABS, do not apply a 12-volt power source to the ground circuit of the pump motor in the HCU. Doing this will damage the pump motor and will require replacement of the entire HCU.

CAUTION: An attempt to remove or disconnect certain system components may result in improper system operation. Only those components with approved removal and installation procedures in this manual should be serviced.

CAUTION: If welding work is to be performed on the vehicle, using an electric arc welder, the CAB connector should be disconnected during the welding operation.

CAUTION: Many components of the ABS System are not serviceable and must be replaced as an assembly. Do not disassemble any component which is not designed to be serviced.

CAUTION: Only the recommended jacking or hoisting positions for this vehicle are to be used whenever it is necessary to lift a vehicle. Failure to raise a vehicle from the recommended locations could result in lifting a vehicle by the hydraulic control unit mounting bracket. Lifting a vehicle by the hydraulic control unit mounting bracket will result in damage to the mounting bracket and the hydraulic control unit.

CAUTION: Brake fluid will damage painted surfaces. If brake fluid is spilled on any painted surface, wash off with water immediately.

DIAGNOSIS AND TESTING - INSPECTION AND ROAD TEST

(1) Visually inspect the ABS for damaged or disconnected components and connectors.

(2) Verify the brake lamps are operational. If they are not, repair them prior to continuing.

(3) Connect the DRBIII® scan tool to the Data Link Connector located under the instrument panel to the right of the steering column. If the DRBIII® does not power-up, check the power and ground supplies to the connector.

(4) Turn the ignition key to the ON position. Select ANTILOCK BRAKES.

(5) Read and record any Diagnostic Trouble Codes (DTCs). If any DTCs are present, refer to the appropriate chassis diagnostic information.

NOTE: Diagnostic trouble codes (DTCs) are kept in the controller's memory until either erased by the technician using the DRBIII®, or erased automatically after 3500 miles. DTCs are retained by the controller even if the ignition is turned off or the battery is disconnected. More than one DTC can be stored at a time. When accessed, the number of occurrences and the DTC that is stored are displayed.

If no problems are observed, it will be necessary to road test the vehicle.

BRAKES - ABS (Continued)

Many ABS conditions judged to be a problem by the driver may be normal operating conditions. See Antilock Brake System - Operation to become familiarized with the normal characteristics of this antilock brake system.

WARNING: CONDITIONS THAT RESULT IN TURNING ON THE RED BRAKE WARNING INDICATOR LAMP MAY INDICATE REDUCED BRAKING ABILITY.

Before road testing a brake complaint vehicle, note whether the red BRAKE warning indicator lamp, amber ABS warning indicator lamp, or both are turned on.

If it is the red BRAKE warning indicator, there is a brake hydraulic problem that must be corrected before driving the vehicle. Refer to the Base Brake System - Diagnosis And Testing. If the MIC determines the amber ABS warning indicator is not functioning, it will illuminate the red BRAKE warning indicator.

If the amber ABS warning indicator is on, road test the vehicle as described below. While the amber ABS warning indicator is on, the ABS is not functional. The ability to stop the car using the base brake system should not be affected.

If both the red BRAKE and the amber ABS warning indicators are illuminated, there is possibility that there is an ABS problem. For some failures the ABS unit will discontinue ABS as well as EVBP and illuminate both the red BRAKE and the amber ABS warning indicators. **Braking ability may be reduced.** Before road testing, read DTC's and refer to the Appropriate Diagnostic Information. Also, the MIC will illuminate both the red BRAKE and the amber ABS warning indicators if the ABS CAB is not communicating on the BUS.

(6) Turn the key to the OFF position and then back to the ON position. Note whether the amber ABS warning lamp continues to stay on.

(7) If the amber ABS warning indicator lamp stays on, shift into gear and drive the car to a speed of approximately 25 km/h (15 mph) to complete the ABS Start-Up and Drive-Off Cycles (see Antilock Brake System - Operation). If at this time the amber ABS warning indicator lamp stays on, refer to the Appropriate Diagnostic Information.

(8) If the amber ABS warning indicator lamp goes out at any time, drive the vehicle a short distance. Accelerate the vehicle to a speed of at least 64 km/h (40 mph). Bring the vehicle to a complete stop, braking hard enough to cause the ABS to cycle. Repeat this action several times. Using the DRBIII®, read and record any Diagnostic Trouble Codes (DTCs). If any DTCs are present, refer to the Appropriate Diagnostic Information.

STANDARD PROCEDURE - ANTILOCK BRAKE SYSTEM BLEEDING

The base brake's hydraulic system must be bled anytime air enters the hydraulic system. The ABS though, particularly the ICU (HCU), should only be bled when the HCU is replaced or removed from the vehicle. The ABS must always be bled anytime it is suspected that the HCU has ingested air. Under most circumstances that require the bleeding of the brakes hydraulic system, only the base brake hydraulic system needs to be bled.

It is important to note that excessive air in the brake system will cause a soft or spongy feeling brake pedal.

During the brake bleeding procedure, be sure the brake fluid level remains close to the FULL level in the master cylinder fluid reservoir. Check the fluid level periodically during the bleeding procedure and add DOT 3 brake fluid as required.

The ABS must be bled as two independent braking systems. The non-ABS portion of the brake system with ABS is to be bled the same as any non-ABS system.

The ABS portion of the brake system must be bled separately. Use the following procedure to properly bleed the brake hydraulic system including the ABS.

BLEEDING

When bleeding the ABS system, the following bleeding sequence must be followed to insure complete and adequate bleeding.

(1) Make sure all hydraulic fluid lines are installed and properly torqued.

(2) Connect the DRBIII® scan tool to the diagnostics connector. The diagnostic connector is located under the lower steering column cover to the left of the steering column.

(3) Using the DRB, check to make sure the CAB does not have any fault codes stored. If it does, clear them using the DRB.

WARNING: WHEN BLEEDING THE BRAKE SYSTEM WEAR SAFETY GLASSES. A CLEAR BLEED TUBE MUST BE ATTACHED TO THE BLEEDER SCREWS AND SUBMERGED IN A CLEAR CONTAINER FILLED PART WAY WITH CLEAN BRAKE FLUID. DIRECT THE FLOW OF BRAKE FLUID AWAY FROM YOURSELF AND THE PAINTED SURFACES OF THE VEHICLE. BRAKE FLUID AT HIGH PRESSURE MAY COME OUT OF THE BLEEDER SCREWS WHEN OPENED.

(4) Bleed the base brake system using the standard pressure or manual bleeding procedure. (Refer to 5 - BRAKES - BASE - STANDARD PROCEDURE)

BRAKES - ABS (Continued)

(5) Using the DRB, select ANTILOCK BRAKES, followed by MISCELLANEOUS, then BLEED BRAKES. Follow the instructions displayed. When the scan tool displays TEST COMPLETED, disconnect the scan tool and proceed.

(6) Bleed the base brake system a second time. Check brake fluid level in the reservoir periodically to prevent emptying, causing air to enter the hydraulic system.

(7) Fill the master cylinder reservoir to the full level.

(8) Test drive the vehicle to be sure the brakes are operating correctly and that the brake pedal does not feel spongy.

SPECIFICATIONS

ABS FASTENER TORQUE

(Refer to 5 - BRAKES - BASE - SPECIFICATIONS)

TONE WHEEL RUNOUT

DESCRIPTION	SPECIFICATION
Front Tone Wheel Maximum Runout	0.25 mm (0.009 in.)
Rear Tone Wheel Maximum Runout	0.25 mm (0.009 in.)

WHEEL SPEED SENSOR AIR GAP

DESCRIPTION	SPECIFICATION
Front Sensor	0.42 – 1.71 mm 0.017 – 0.067 in.
Rear Sensor	0.38 – 1.31 mm 0.015 – 0.052 in.

FRONT WHEEL SPEED SENSOR

REMOVAL

This procedure is for the removal and installation of one of the two front wheel speed sensors.

(1) Raise vehicle on jack stands or centered on a frame contact type hoist. See Hoisting in the Lubrication and Maintenance section of this manual, for the required lifting procedure to be used for this vehicle.

(2) Remove the tire and wheel assembly from the vehicle.

(3) Remove the speed sensor cable routing bracket (Fig. 1) from the steering knuckle. Remove the wiring harness sealing grommet retainer and speed sensor routing bracket from the inner fender.

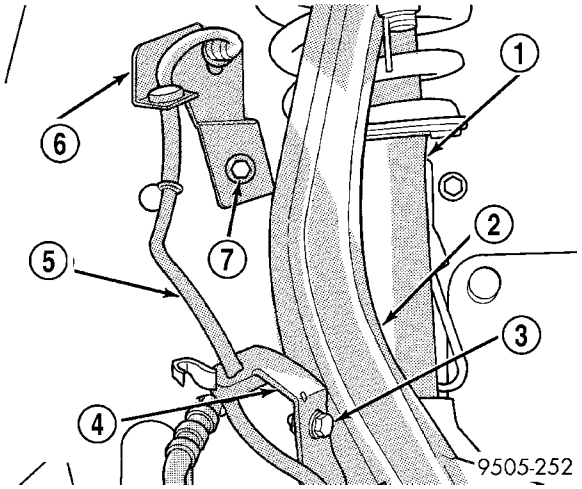

Fig. 1 Speed Sensor Cable Routing

1 - SHOCK ABSORBER
2 - STEERING KNUCKLE
3 - BOLT
4 - SPEED SENSOR ROUTING BRACKET
5 - WHEEL SPEED SENSOR CABLE
6 - GROMMET RETAINER AND CABLE ROUTING BRACKET
7 - BOLT

(4) Remove speed sensor sealing grommet from the inner fender (Fig. 2). Then unplug the speed sensor cable from the vehicle wiring harness (Fig. 2).

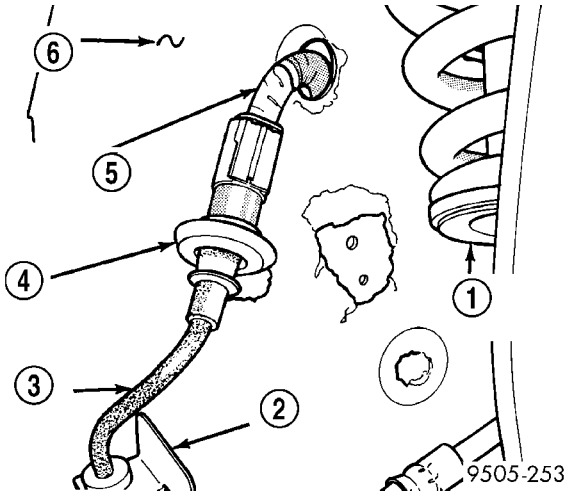

Fig. 2 Wheel Speed Sensor Connection To Vehicle Wiring Harness

1 - FRONT SHOCK ABSORBER
2 - GROMMET RETAINING BRACKET
3 - WHEEL SPEED SENSOR CABLE
4 - SEALING GROMMET
5 - VEHICLE WIRING HARNESS
6 - INNER FENDER

(5) Remove bolt (Fig. 3) attaching speed sensor to steering knuckle. Then remove speed sensor head from steering knuckle

FRONT WHEEL SPEED SENSOR (Continued)

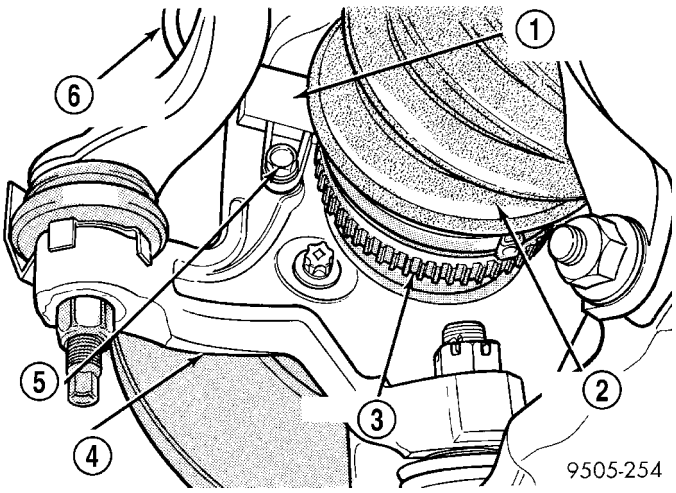

Fig. 3 Speed Sensor Head Attachment To Steering Knuckle

1 - SPEED SENSOR HEAD
2 - DRIVESHAFT
3 - TONE WHEEL
4 - STEERING KNUCKLE
5 - BOLT
6 - SPEED SENSOR CABLE

CAUTION: If speed sensor head locating pin has seized to the steering knuckle, do not attempt to remove speed sensor head by grasping with pliers and turning. This will damage the speed sensor head. Use only the following procedure.

(6) If speed sensor head can not be removed from steering knuckle by hand, the locating pin on the speed sensor head has seized to the steering knuckle do to corrosion. Remove speed sensor head from steering knuckle using the following procedure. Remove disc brake caliper from steering knuckle, and remove brake rotor from hub/bearing assembly. Then insert a pin punch through hole in front steering knuckle (Fig. 4) and tap speed sensor head locating pin out of steering knuckle.

INSTALLATION

This procedure is for the removal and installation of one of the two front wheel speed sensors.

CAUTION: Proper installation of wheel speed sensor cables is critical to continued system operation. Be sure that cables are installed in retainers. Failure to install cables in retainers as shown in this section may result in contact with moving parts and/or over extension of cables, resulting in an open circuit.

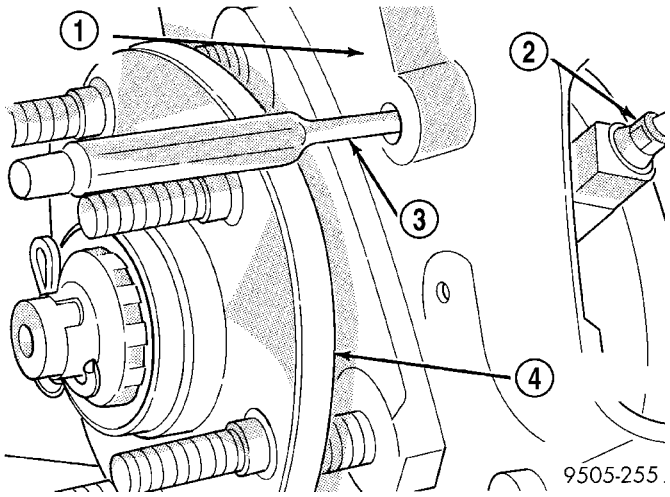

Fig. 4 Speed Sensor Head Removal From Steering Knuckle

1 - STEERING KNUCKLE
2 - SPEED SENSOR HEAD
3 - PIN PUNCH
4 - HUB/BEARING

(1) Connect the wheel speed sensor cable connector to the vehicle wiring harness (Fig. 2).

(2) Install the speed sensor cable assembly grommet into the front inner fender (Fig. 2). Install speed sensor cable grommet retainer/routing bracket on the inner fender of the vehicle and install and securely tighten attaching bolt (Fig. 1).

CAUTION: When installing the wheel speed sensor cable routing bracket on the steering knuckle, (Fig. 1) the speed sensor cable must be looped toward the shock absorber as shown in (Fig. 5). If speed sensor cable is not routed in this direction it will rub against the tire or wheel, damaging the speed sensor cable.

(3) Install the speed sensor cable routing bracket on the steering knuckle. Install and tighten routing bracket mounting bolt to a torque of 12 N·m (105 in. lbs.)

(4) Install speed sensor head on steering knuckle (Fig. 6). When installing speed sensor head on steering knuckle, apply a small amount of grease on speed sensor locating pin (Fig. 6). Use Mopar, Multi-Purpose Grease or an equivalent on speed sensor head locating pin. Install the speed sensor head attaching screw and tighten to a torque of 6 N·m (55 in. lbs.).

(5) Install the wheel and tire assembly on vehicle.

FRONT WHEEL SPEED SENSOR (Continued)

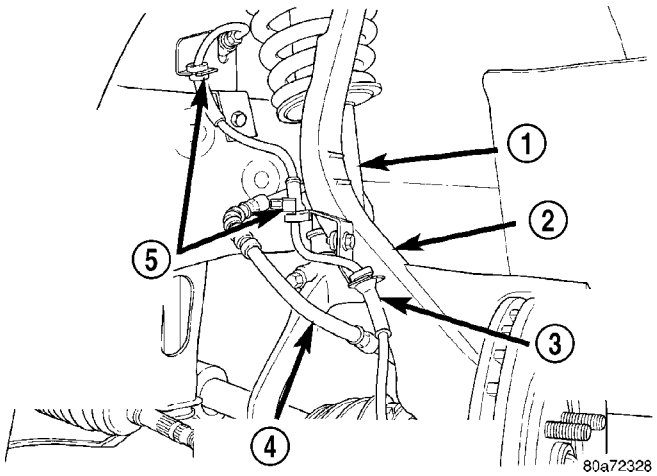

Fig. 5 Correct Front Wheel Speed Sensor Cable Routing

1 - SHOCK ABSORBER
2 - STEERING KNUCKLE
3 - WHEEL SPEED SENSOR CABLE
4 - BRAKE FLEX HOSE
5 - WHEEL SPEED SENSOR CABLE MUST BE LOOPED TOWARD SHOCK ABSORBER BETWEEN THESE ROUTING BRACKETS.

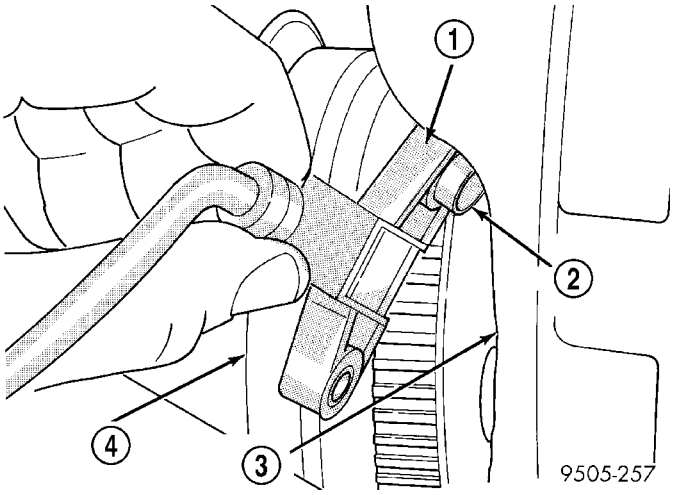

Fig. 6 Installing Speed Sensor Head In Steering Knuckle

1 - SPEED SENSOR HEAD
2 - LOCATING PIN
3 - STEERING KNUCKLE
4 - DRIVESHAFT

(6) Road test vehicle to ensure proper operation of the base and ABS systems.

REAR WHEEL SPEED SENSOR

REMOVAL

REMOVAL - JR27

(1) Remove rear seat cushion and back. (Refer to 23 - BODY/SEATS/REAR SEAT BACK - REMOVAL)

(2) Roll back the main silencer pad along the side to expose the wheel speed sensor harness connector located behind the wheel house silencer (Fig. 7).

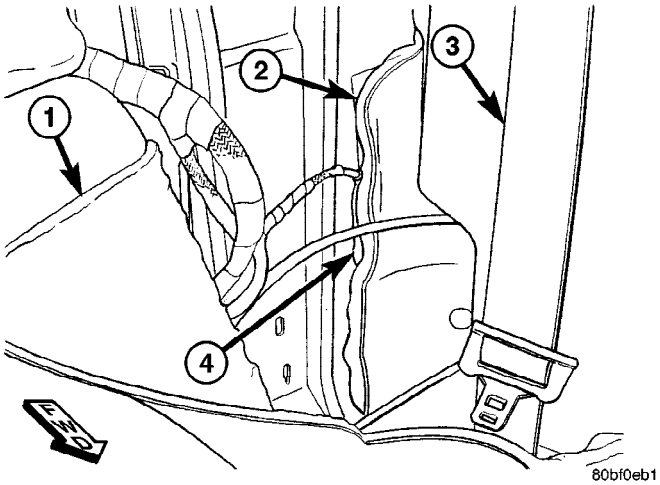

Fig. 7 SPEED SENSOR HARNESS CONNECTOR LOCATION

1 - MAIN SILENCER PAD
2 - WHEEL HOUSE SILENCER
3 - SEAT BELT
4 - SENSOR HARNESS CONNECTOR

(3) Pull the wheel speed sensor harness connector out from behind the wheel house silencer. It should have a foam sleeve covering it (Fig. 8).

(4) Push foam sleeve up off connector (Fig. 9) and disconnect speed sensor harness connector from vehicle wiring harness.

(5) Raise vehicle. (Refer to LUBRICATION & MAINTENANCE/HOISTING - STANDARD PROCEDURE)

(6) Remove speed sensor harness sealing grommet retainer from the rear frame rail of the vehicle (Fig. 10).

(7) Remove speed sensor harness sealing grommet and harness from hole in body of vehicle.

(8) Remove speed sensor routing clips from the rear upper control arm.

(9) Remove bolt, then wheel speed sensor from vehicle (Fig. 11).

REMOVAL - JR41

(1) Fold down rear seat back.

REAR WHEEL SPEED SENSOR (Continued)

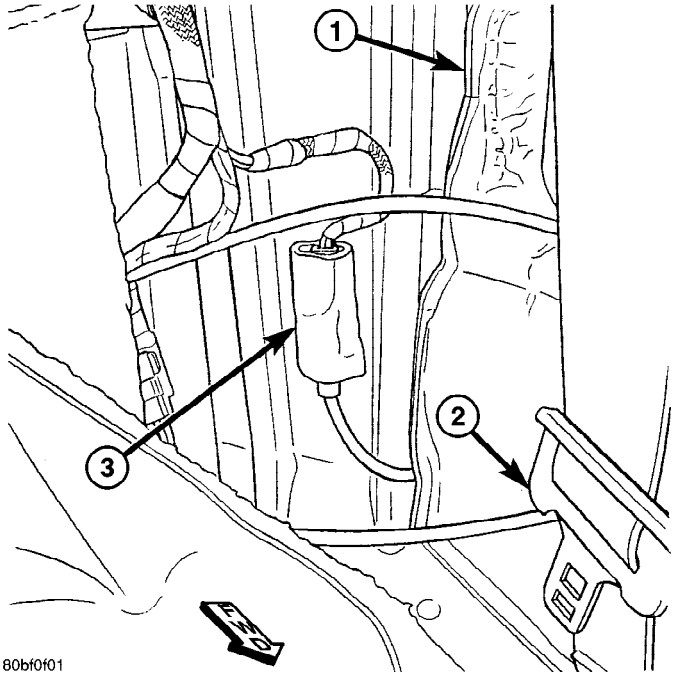

Fig. 8 FOAM SLEEVE COVERED SENSOR HARNESS CONNECTOR

1 - WHEEL HOUSE SILENCER
2 - SEAT BELT
3 - FOAM SLEEVE COVERED CONNECTOR

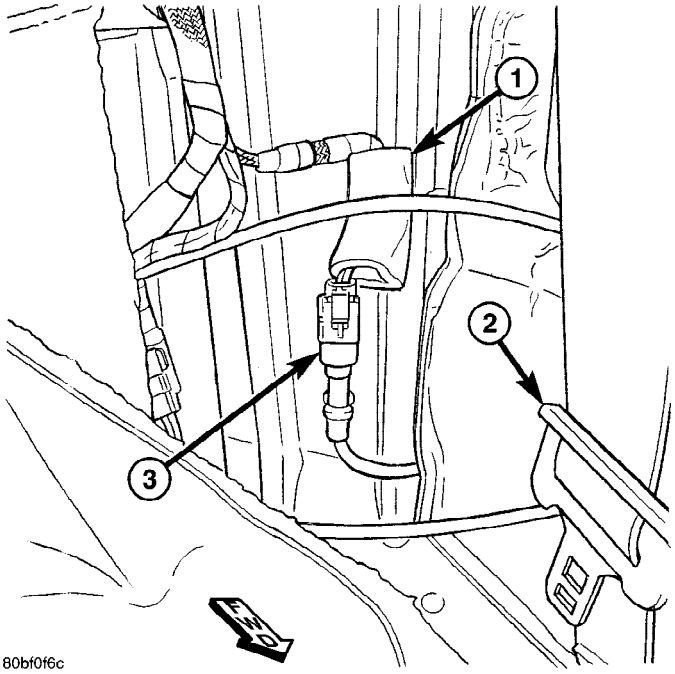

Fig. 9 SENSOR HARNESS CONNECTOR

1 - FOAM SLEEVE
2 - SEAT BELT
3 - CONNECTOR

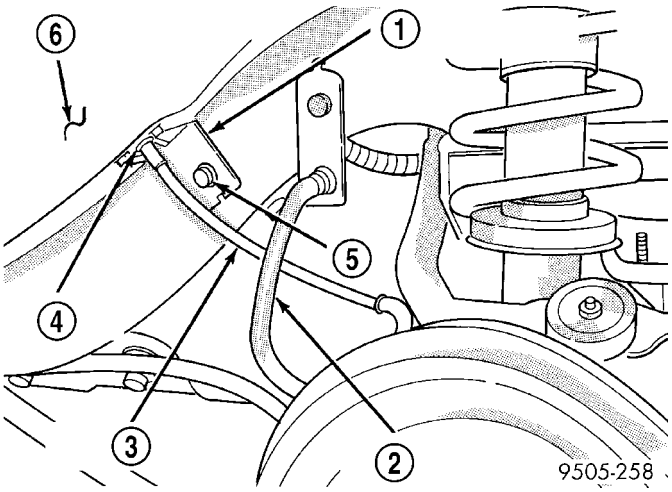

Fig. 10 Rear Speed Senor Cable Attachment To Body

1 - SEALING GROMMET RETAINER
2 - BRAKE FLEX HOSE
3 - SPEED SENSOR CABLE
4 - SEALING GROMMET
5 - BOLT
6 - REAR INNER FENDER

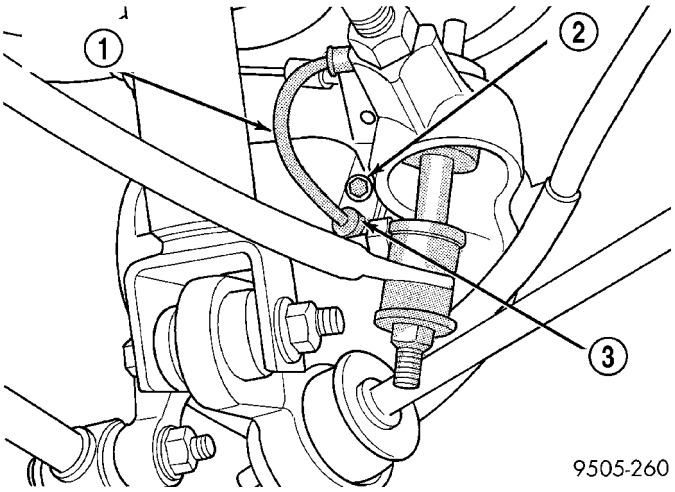

Fig. 11 Rear Speed Sensor Head Attachment To Brake Support Plate

1 - SPEED SENSOR CABLE
2 - BOLT
3 - SPEED SENSOR HEAD

(2) Disconnect speed sensor connector at vehicle wiring harness found at lower outside corner of seat back.

(3) Raise vehicle. (Refer to LUBRICATION & MAINTENANCE/HOISTING - STANDARD PROCEDURE)

(4) Remove rear tire and wheel assembly from vehicle.

(5) Remove speed sensor harness sealing grommet retainer from the rear frame rail of the vehicle (Fig. 10).

REAR WHEEL SPEED SENSOR (Continued)

(6) Remove speed sensor harness sealing grommet and harness from hole in body of vehicle.

(7) Remove speed sensor routing clips from the rear upper control arm.

(8) Remove bolt, then wheel speed sensor from vehicle (Fig. 11).

INSTALLATION

INSTALLATION - JR27

CAUTION: Proper installation of wheel speed sensor harness is critical to continued system operation. Be sure that harness is installed properly to avoid harness contact with moving parts or overextension, resulting in an open circuit.

(1) Install speed sensor head into brake adapter (Fig. 11). Install bolt through routing clip and secure wheel speed sensor in place. Tighten bolt to 8 N·m (75 in. lbs.)

(2) Install speed sensor harness routing clip on upper control arm. Install and securely tighten the routing clip attaching bolt.

(3) Install connector end of speed sensor harness through hole at frame rail.

(4) Install speed sensor harness sealing grommet into hole. Install the sealing grommet retainer and attaching bolt (Fig. 10). Securely tighten retainer attaching bolt.

(5) Lower vehicle.

(6) Connect speed sensor harness connector to vehicle wiring harness (Fig. 9).

(7) Install foam sleeve back over the speed sensor harness connection to prevent rattling (Fig. 8).

(8) Slide the sensor harness connector back behind the wheel house silencer (Fig. 7).

(9) Lay the main silencer pad back into its normal place.

(10) Install the rear seat back and cushion. (Refer to 23 - BODY/SEATS/REAR SEAT BACK - INSTALLATION)

(11) Road test vehicle to ensure proper operation of the base and ABS systems.

INSTALLATION - JR41

CAUTION: Proper installation of wheel speed sensor harness is critical to continued system operation. Be sure that harness is installed properly to avoid harness contact with moving parts or overextension, resulting in an open circuit.

(1) Install speed sensor head into brake adapter (Fig. 11). Install bolt through routing clip and secure wheel speed sensor in place. Tighten bolt to 8 N·m (75 in. lbs.)

(2) Install speed sensor harness routing clip on upper control arm. Install and securely tighten the routing clip attaching bolt.

(3) Install connector end of speed sensor harness through hole at frame rail.

(4) Install speed sensor harness sealing grommet into hole. Install the sealing grommet retainer and attaching bolt (Fig. 10). Securely tighten retainer attaching bolt.

(5) Install the tire and wheel assembly on vehicle.

(6) Lower vehicle.

(7) Connect speed sensor harness connector to vehicle wiring harness behind rear seat back. **Install sleeve back over the speed sensor harness connection to prevent rattling.**

(8) Road test vehicle to ensure proper operation of the base and ABS systems.

TONE WHEEL

INSPECTION - TONE WHEEL

Tone wheels can cause erratic wheel speed sensor signals. Inspect tone wheels for the following possible causes.

- missing, chipped, or broken teeth
- contact with the wheel speed sensor
- wheel speed sensor to tone wheel alignment
- wheel speed sensor to tone wheel clearance
- excessive tone wheel runout
- tone wheel loose on its mounting surface

If a front tone wheel is found to need replacement, the drive shaft must be replaced. No attempt should be made to replace just the tone wheel. (Refer to 3 - DIFFERENTIAL & DRIVELINE/HALF SHAFT - REMOVAL)

If a rear tone wheel is found to need replacement, the tone wheel is incorportaed into the hub and bearing assembly and the hub and bearing must be replaced. (Refer to 2 - SUSPENSION/REAR/HUB / BEARING - REMOVAL)

If wheel speed sensor to tone wheel contact is evident, determine the cause and correct it before replacing the wheel speed sensor or tone wheel.

Check the gap between the speed sensor head and the tone wheel to ensure it is within specifications. (Refer to 5 - BRAKES - ABS/ELECTRICAL - SPECIFICATIONS)

Excessive wheel speed sensor runout can cause erratic wheel speed sensor signals. Refer to SPECIFICATIONS in this section of the service manual for the maximum allowed tone wheel runout (Refer to 5 - BRAKES - ABS/ELECTRICAL - SPECIFICATIONS). If tone wheel runout is excessive, determine if it is

TONE WHEEL (Continued)

caused by a defect in the driveshaft assembly or hub and bearing. Replace as necessary.

Tone wheels are pressed onto their mounting surfaces and should not rotate independently from the mounting surface. Replacement of the front driveshaft or rear hub and bearing is necessary.

TRACTION CONTROL SWITCH

REMOVAL

NOTE: Before proceeding, review all WARNINGS and CAUTIONS. (Refer to 19 - STEERING/COLUMN - WARNING) (Refer to 19 - STEERING/COLUMN - CAUTION)

(1) Open hood and remove remote ground cable from ground stud on left front shock tower. Isolate ground cable from vehicle by installing cable isolator on ground stud (Fig. 12).

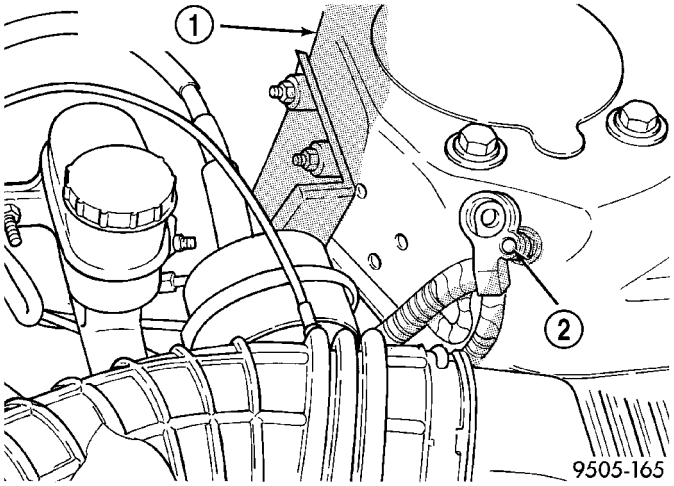

Fig. 12 Correctly Isolated Remote Ground Cable

1 - LEFT STRUT TOWER
2 - GROUND STUD

(2) Remove instrument panel trim bolster below steering column. (Refer to 23 - BODY/INSTRUMENT PANEL/INSTRUMENT PANEL TRIM - REMOVAL)

(3) Disconnect traction control “OFF” switch wiring connector at column harness.

(4) Remove 2 screws attaching upper and lower shrouds to steering column (Fig. 13).

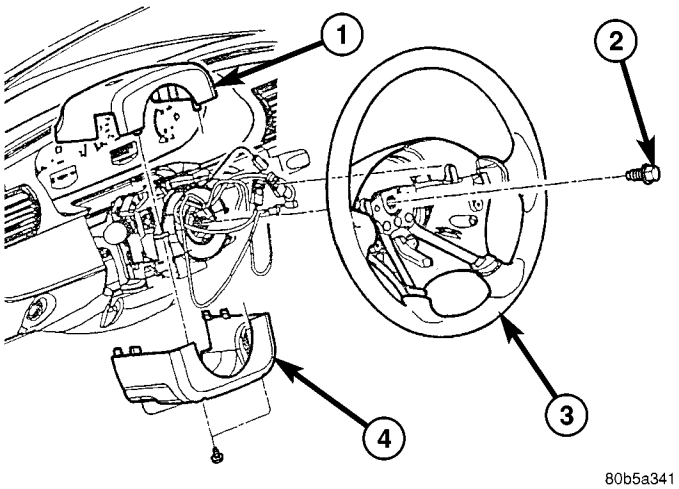

Fig. 13 Steering Wheel And Shroud Mounting

1 - UPPER SHROUD
2 - BOLT
3 - STEERING WHEEL
4 - LOWER SHROUD

(5) Remove upper shroud (with switch) from steering column by pressing inward on upper shroud just above the parting line while pulling upper and lower shrouds apart.

(6) Release tilt lever and tilt steering column to its highest point, then remove lower shroud from steering column.

(7) Disengage retaining tab and remove traction control “OFF” switch from upper shroud (Fig. 14).

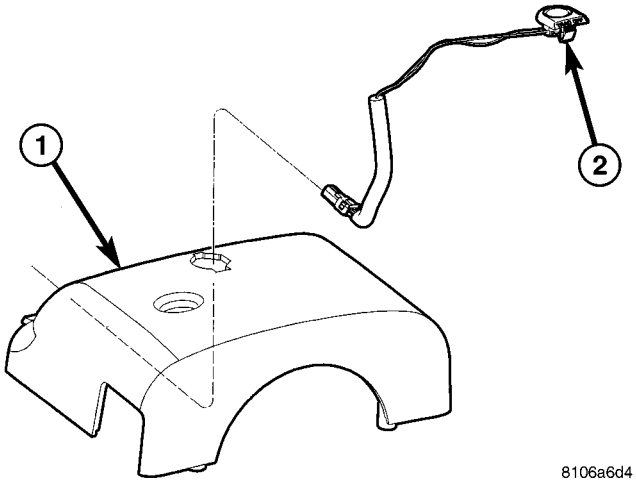

Fig. 14 Traction Control Switch

1 - UPPER SHROUD
2 - TRACTION CONTROL ″OFF″ SWITCH

TRACTION CONTROL SWITCH (Continued)

INSTALLATION

(1) Install switch through top of upper shroud and snap into place (Fig. 14).

(2) Install the upper and lower steering column shrouds onto the lock housing of the steering column. As upper shroud is installed, guide traction control "OFF" switch wiring pigtail down right side of column and connect wiring connector to column harness.

(3) Install and securely tighten screws attaching steering column shrouds to column lock cylinder housing to 1.9 N·m (17 in. lbs.) torque (Fig. 13).

(4) Install instrument panel trim bolster below steering column. (Refer to 23 - BODY/INSTRUMENT PANEL/INSTRUMENT PANEL TRIM - INSTALLATION)

(5) Connect remote ground cable to ground stud on left front shock tower.

(6) Close hood.

(7) Connect DRBIII® scan tool to diagnostic data link connector and check for any faults.

(8) Road test vehicle checking operation of traction control and switch.

HCU (HYDRAULIC CONTROL UNIT)

DESCRIPTION

The hydraulic control unit (HCU) is mounted to the CAB as part of the ICU (Fig. 20). The HCU controls the flow of brake fluid to the brakes using a series of valves and accumulators. A pump/motor is mounted on the HCU to supply build pressure to the brakes during an ABS stop.

OPERATION - HYDRAULIC CIRCUITS AND VALVES

The hydraulic fluid control valves within the HCU control the flow of pressurized brake fluid to the wheel brakes during the different modes of ABS braking. The following paragraphs explain how this works. For purposes of explanation only, it is assumed that only the right front wheel is experiencing antilock braking; the following diagrams show only the right front wheel in an antilock braking operation.

HCU (HYDRAULIC CONTROL UNIT) (Continued)

NORMAL BRAKING HYDRAULIC CIRCUIT AND SOLENOID VALVE FUNCTION (ABS WITHOUT TRACTION CONTROL)

The hydraulic diagram (Fig. 15) shows the vehicle in the normal braking mode of the base brake hydraulic system. The diagram shows no wheel spin or slip occurring relative to the speed of the vehicle. The driver is applying the brake pedal which builds pressure in the brake hydraulic system to engage the brakes and stop the vehicle.

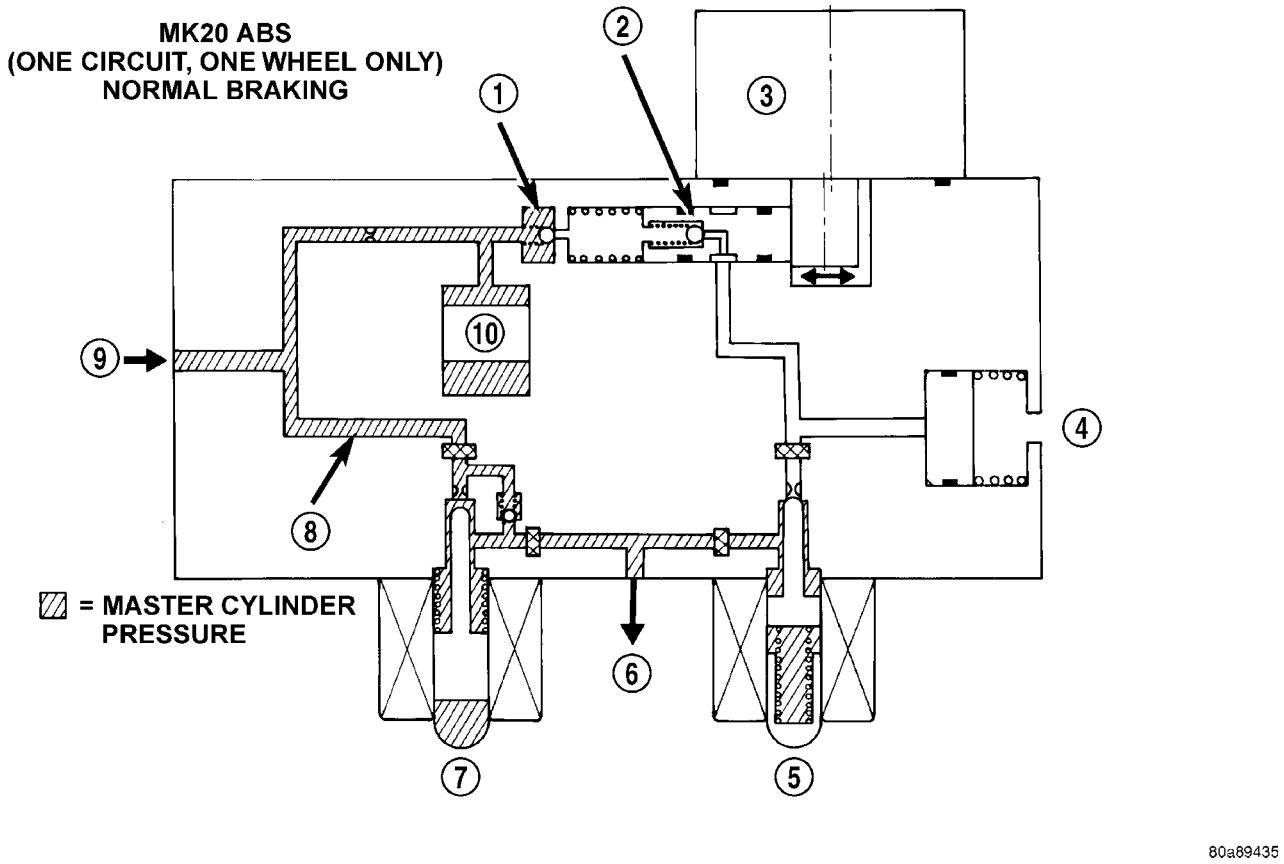

Fig. 15 Normal Braking Hydraulic Circuit (W/O Traction Control)

1 - OUTLET VALVE
2 - PUMP PISTON
3 - PUMP MOTOR (OFF)
4 - LOW PRESSURE ACCUMULATOR
5 - NORMALLY CLOSED VALVE (OFF)
6 - TO RIGHT FRONT WHEEL
7 - NORMALLY OPEN VALVE (OFF)
8 - MASTER CYLINDER PRESSURE
9 - FROM MASTER CYLINDER
10 - NOISE DAMPER CHAMBER

HCU (HYDRAULIC CONTROL UNIT) (Continued)

ABS HYDRAULIC CIRCUIT AND SOLENOID VALVE FUNCTION (ABS WITHOUT TRACTION CONTROL)

The hydraulic diagram (Fig. 16) shows the vehicle in the ABS braking mode. The diagram shows one wheel is slipping because the driver is attempting to stop the vehicle at a faster rate than is allowed by the surface on which the tires are riding.

- The normally open and normally closed valves modulate (build/decay) the brake hydraulic pressure as required.
- The pump/motor is switched on so that the brake fluid from the low pressure accumulators is returned to the master cylinder circuits.
- The brake fluid is routed to either the master cylinder or the wheel brake depending on the position of the normally open valve.

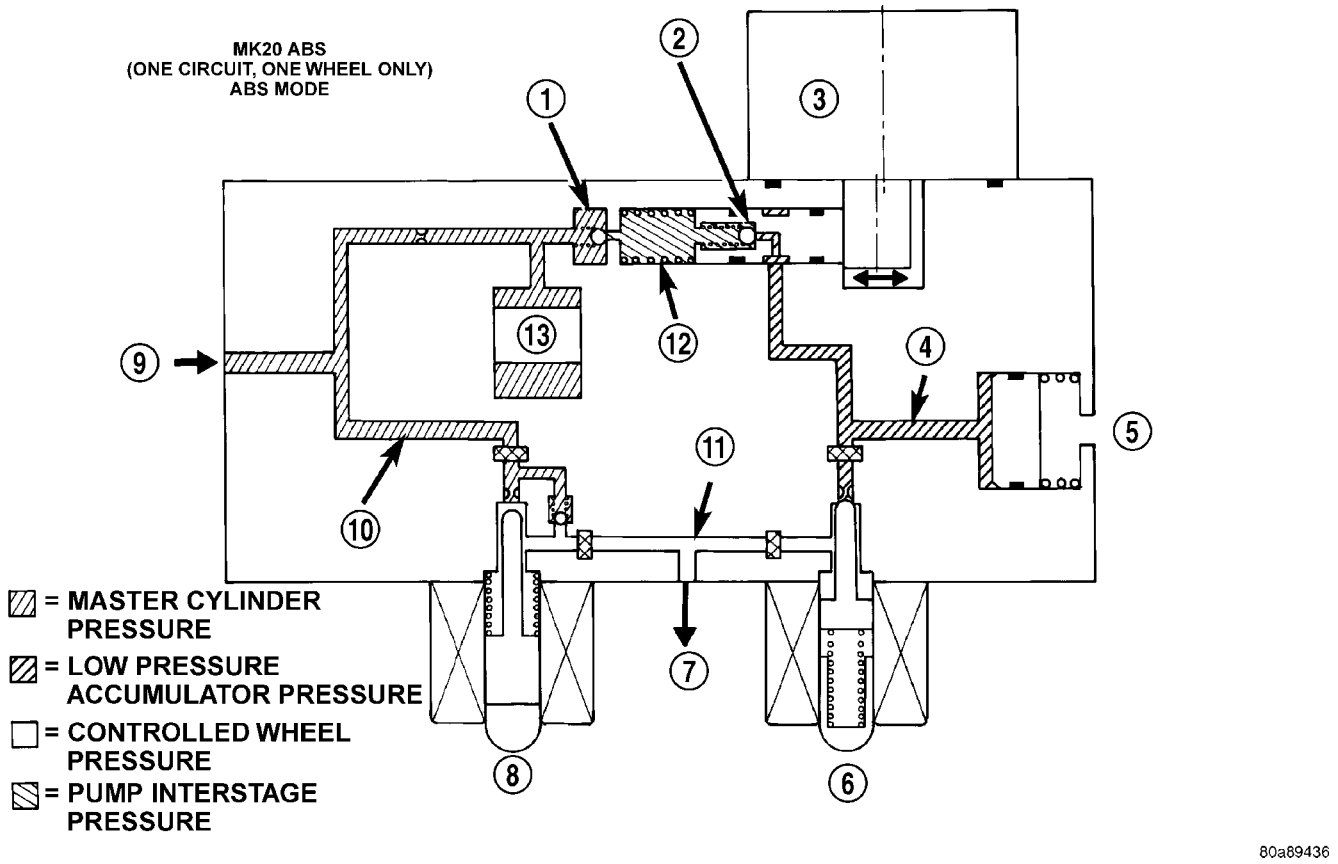

Fig. 16 ABS Mode Hydraulic Circuit (W/O Traction Control)

1 - OUTLET VALVE
2 - PUMP PISTON
3 - PUMP MOTOR (ON)
4 - LOW PRESSURE ACCUMULATOR PRESSURE
5 - LOW PRESSURE ACCUMULATOR
6 - NORMALLY CLOSED VALVE (MODULATING)
7 - TO RIGHT FRONT WHEEL
8 - NORMALLY OPEN VALVE (MODULATING)
9 - FROM MASTER CYLINDER
10 - MASTER CYLINDER PRESSURE
11 - CONTROLLED WHEEL PRESSURE
12 - PUMP INTERSTAGE PRESSURE
13 - NOISE DAMPER CHAMBER

HCU (HYDRAULIC CONTROL UNIT) (Continued)

NORMAL BRAKING HYDRAULIC CIRCUIT, SOLENOID VALVE, AND SHUTTLE VALVE FUNCTION (ABS WITH TRACTION CONTROL)

The hydraulic diagram (Fig. 17) shows a vehicle with traction control in the normal braking mode. The diagram shows no wheel spin or slip occurring relative to the speed of the vehicle. The driver is applying the brake pedal which builds pressure in the brake hydraulic system to engage the brakes and stop the vehicle. The hydraulic shuttle valve closes with every brake pedal application so pressure is not created at the inlet to the pump/motor.

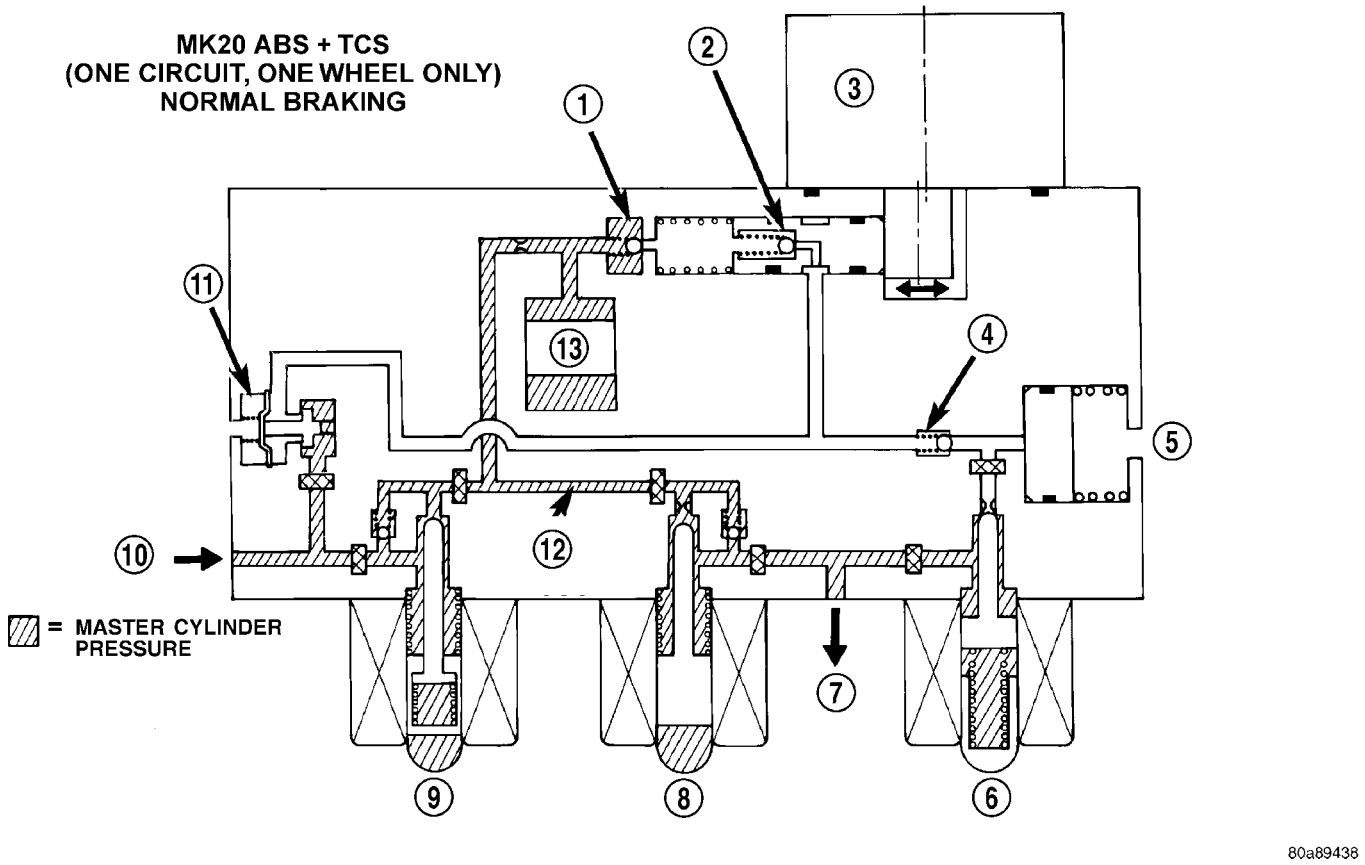

Fig. 17 ABS With Traction Control - Normal Braking Hydraulic Circuit

1 - OUTLET VALVE
2 - PUMP PISTON
3 - PUMP MOTOR (OFF)
4 - SUCTION VALVE
5 - LOW PRESSURE ACCUMULATOR
6 - NORMALLY CLOSED VALVE (OFF)
7 - TO RIGHT FRONT WHEEL
8 - NORMALLY OPEN VALVE (OFF)
9 - NORMALLY OPEN TC (ASR) VALVE (OFF)
10 - FROM MASTER CYLINDER
11 - HYDRAULIC SHUTTLE VALVE
12 - MASTER CYLINDER PRESSURE
13 - NOISE DAMPER CHAMBER

HCU (HYDRAULIC CONTROL UNIT) (Continued)

ABS BRAKING HYDRAULIC CIRCUIT, SOLENOID VALVE, AND SHUTTLE VALVE FUNCTION (ABS WITH TRACTION CONTROL)

The hydraulic diagram (Fig. 18) shows the vehicle in the ABS braking mode. The diagram shows one wheel is slipping because the driver is attempting to stop the vehicle at a faster rate than is allowed by the surface on which the tires are riding.

- The hydraulic shuttle valve closes upon brake application so that the pump/motor cannot siphon brake fluid from the master cylinder.
- The normally open and normally closed valves modulate (build/decay) the brake hydraulic pressure as required.
- The pump/motor is switched on so that the brake fluid from the low pressure accumulators is returned to the master cylinder circuits.
- The brake fluid is routed to either the master cylinder or the wheel brake depending on the position of the normally open valve.

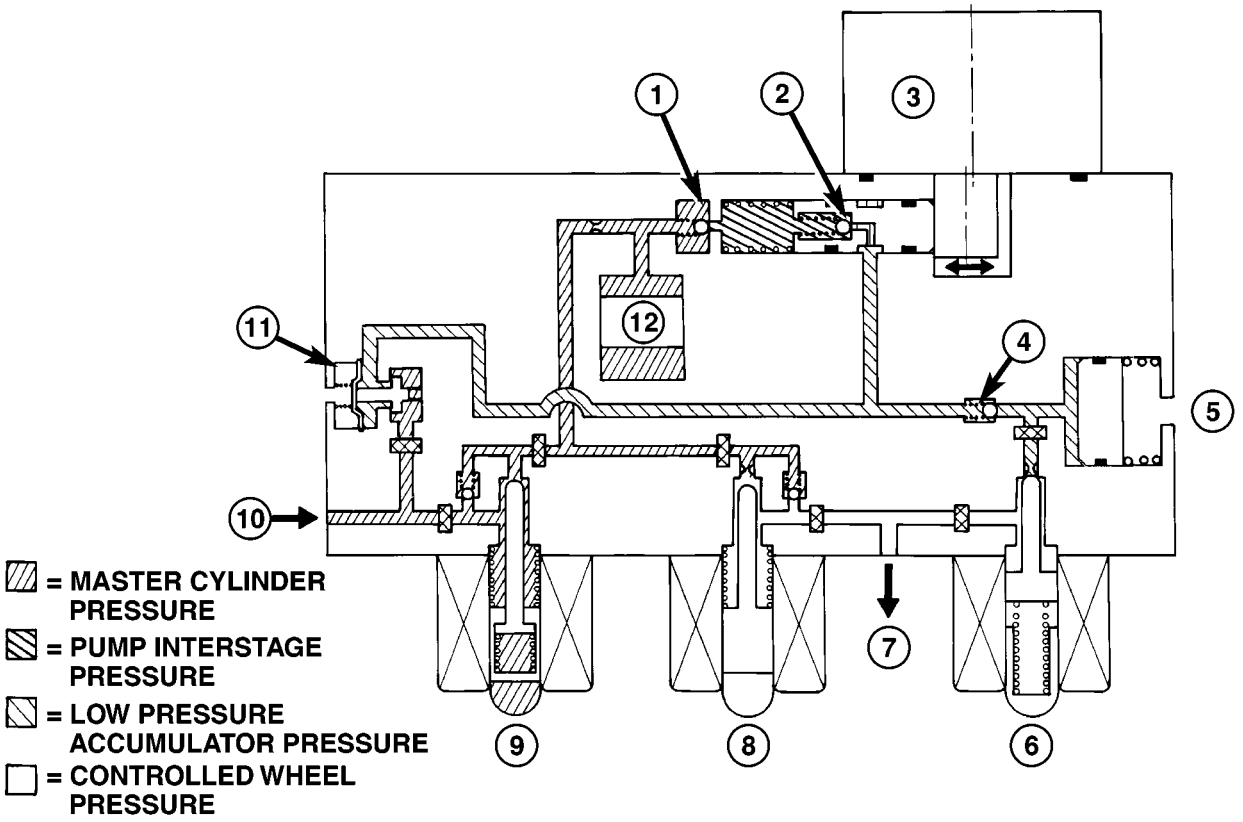

80d69d08

Fig. 18 ABS With Traction Control - ABS Braking Hydraulic Circuit

1 - OUTLET VALVE
2 - PUMP PISTON
3 - PUMP MOTOR
4 - SUCTION VALVE
5 - LOW PRESSRUE ACCUMULATOR
6 - NORMALLY CLOSED VALVE (MODULATING)
7 - TO RIGHT FRONT WHEEL
8 - NORMALLY OPEN VALVE (MODULATING)
9 - NORMALLY OPEN ASR VALVE (OFF)
10 - FROM MASTER CYLINDER
11 - HYDRAULIC SHUTTLE VALVE
12 - NOISE DAMPER CHAMBER

HCU (HYDRAULIC CONTROL UNIT) (Continued)

ABS TRACTION CONTROL HYDRAULIC CIRCUIT, SOLENOID VALVE, AND SHUTTLE VALVE FUNCTION (ABS WITH TRACTION CONTROL)

The hydraulic diagram (Fig. 19) shows the vehicle in the traction control (TC) mode. The diagram shows a drive wheel is spinning and brake pressure is required to reduce its speed.

- The normally open TC (ASR) valve is energized to isolate the brake fluid being pumped from the master cylinder and to isolate the driven wheel.
- The normally open TC (ASR) valve bypasses the pump output back to the master cylinder at a fixed pressure setting.
- The normally open and normally closed valves modulate (build/decay) the brake pressure as required to the spinning wheel.

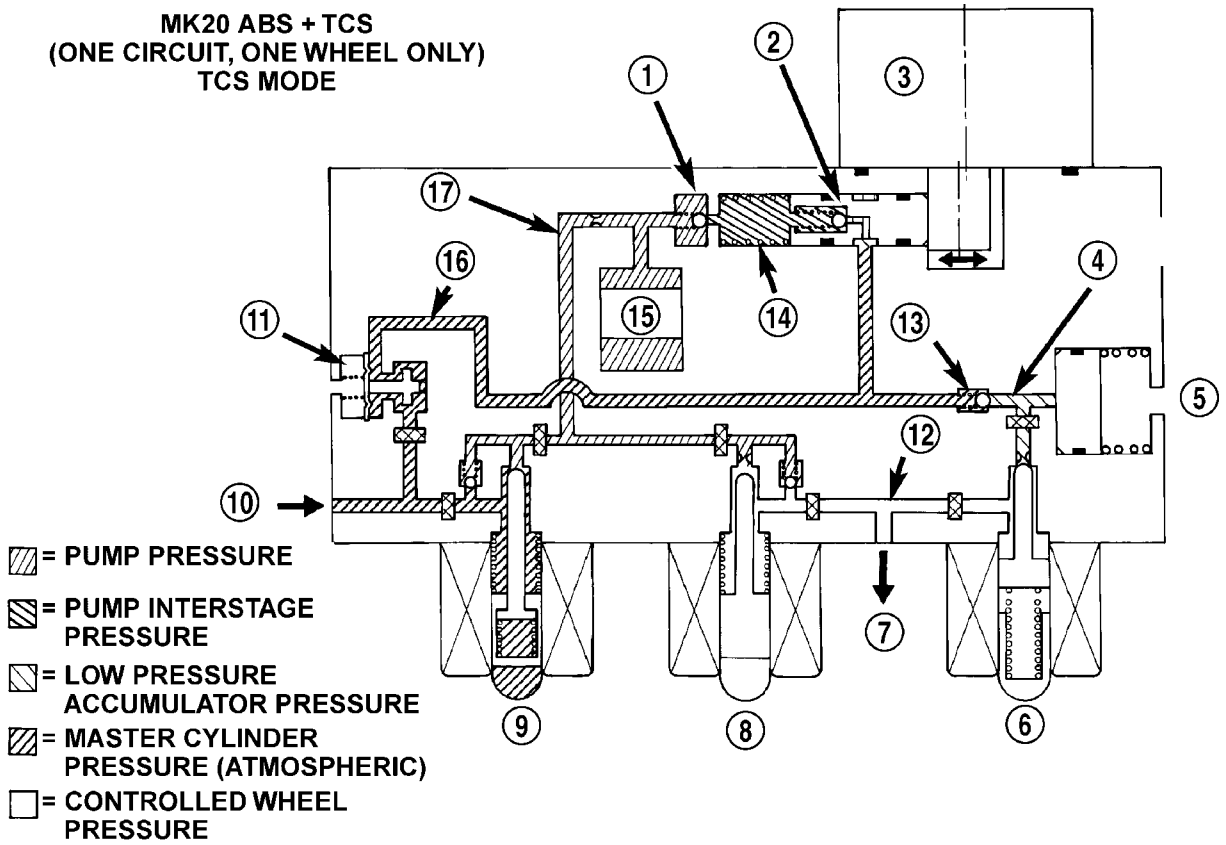

Fig. 19 Traction Control Hydraulic Circuit

1 - OUTLET VALVE
2 - PUMP PISTON
3 - PUMP MOTOR (ON)
4 - LOW PRESSURE ACCUMULATOR PRESSURE
5 - LOW PRESSURE ACCUMULATOR
6 - NORMALLY CLOSED VALVE (MODULATING)
7 - TO RIGHT FRONT WHEEL (SPINNING)
8 - NORMALLY OPEN VALVE (MODULATING)
9 - NORMALLY OPEN TC (ASR) VALVE ON (REGULATING)
10 - FROM MASTER CYLINDER
11 - HYDRAULIC SHUTTLE VALVE
12 - CONTROLLED WHEEL PRESSURE
13 - SUCTION VALVE
14 - PUMP INTERSTAGE PRESSURE
15 - NOISE DAMPER CHAMBER
16 - MASTER CYLINDER PRESSURE
17 - PUMP PRESSURE

ICU (INTEGRATED CONTROL UNIT)

DESCRIPTION

The hydraulic control unit (HCU) and the controller antilock brake (CAB) used with this antilock brake system are combined (integrated) into one unit, which is called the integrated control unit (ICU) (Fig. 20). The ICU is located below the air cleaner housing on the lower radiator support (Fig. 21).

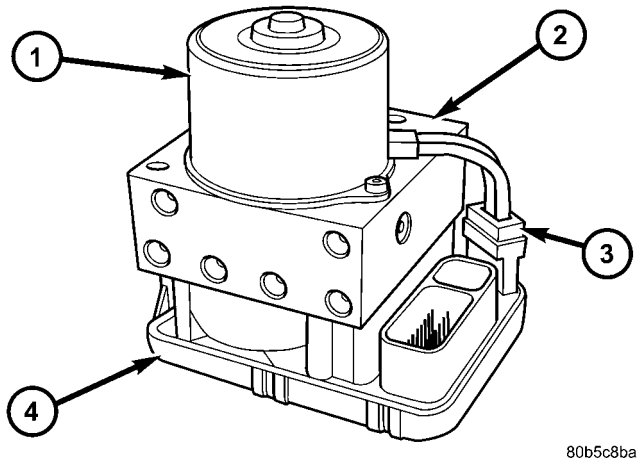

Fig. 20 Integrated Control Unit (ICU)

1 - PUMP/MOTOR
2 - HCU
3 - PUMP/MOTOR WIRING CONNECTOR
4 - CAB

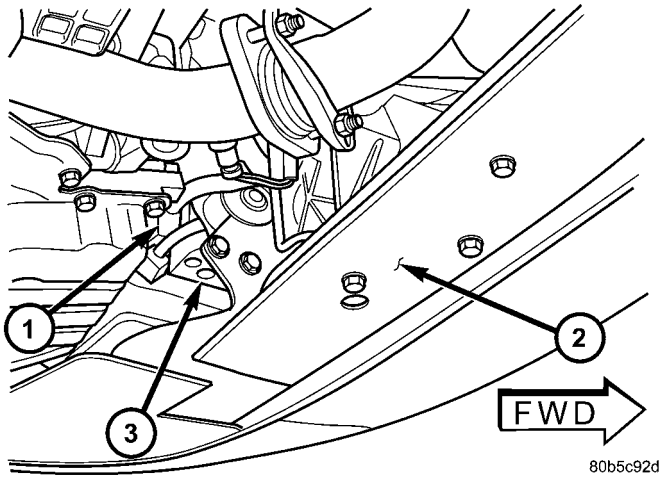

Fig. 21 ICU Location

1 - 24-WAY CAB CONNECTOR
2 - LOWER RADIATOR SUPPORT
3 - ICU

The ICU on this vehicle can be the ABS only type or the ABS with traction control type, depending on how the vehicle is equipped.

The ABS only ICU consists of the following components: the CAB, eight (build/decay) solenoid valves (four inlet valves and four outlet valves), valve block, fluid accumulators, a pump, and an electric motor.

The ABS with traction control ICU consists of the following components: the CAB, eight (build/decay) solenoid valves (four inlet valves and four outlet valves), two traction control (ASR) valves, two hydraulic shuttle valves, valve block, fluid accumulators, a pump, and an electric motor.

The replaceable components of the ICU are the HCU and the CAB. No attempt should be made to service any individual components of the HCU or CAB. For information on the CAB, (Refer to 8 - ELECTRICAL/ELECTRONIC CONTROL MODULES/CONTROLLER ANTILOCK BRAKE - DESCRIPTION).

OPERATION

For information of the ICU, refer to these individual components of the ICU:

- CONTROLLER ANTILOCK BRAKE (CAB) (Refer to 8 - ELECTRICAL/ELECTRONIC CONTROL MODULES/CONTROLLER ANTILOCK BRAKE - OPERATION)
- HYDRAULIC CONTROL UNIT (HCU) (Refer to 5 - BRAKES - ABS/HYDRAULIC/MECHANICAL/HCU (HYDRAULIC CONTROL UNIT) - OPERATION)

For information on the ICU's hydraulic circuits, refer to HYDRAULIC CIRCUITS AND VALVE OPERATION. (Refer to 5 - BRAKES - ABS/HYDRAULIC/MECHANICAL - OPERATION)

REMOVAL - ICU

(1) Remove the remote ground cable from the ground stud on the left strut tower.

(2) Correctly isolate remote ground cable when servicing vehicle by installing the ground cable insulator on the strut tower ground stud. **This will prevent accidental grounding of the remote ground cable.**

(3) Using a brake pedal positioning tool (Fig. 22), depress brake pedal past its first 1 inch of travel and hold in this position. This will isolate the master cylinder reservoir from the brake hydraulic system, not allowing the brake fluid to drain out of the reservoir.

(4) Remove the air cleaner housing. Refer to 9 - ENGINE/AIR INTAKE SYSTEM

(5) Clean any debris away from the fittings on top of the ICU.

(6) Remove the two brake tubes coming from the primary and secondary master cylinder ports at the ICU (Fig. 23).

ICU (INTEGRATED CONTROL UNIT) (Continued)

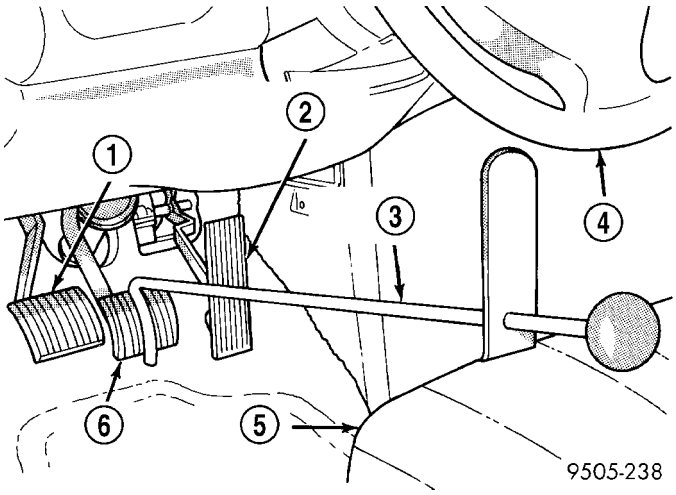

Fig. 22 Brake Pedal Holding Tool Installed (Typical)

1 - CLUTCH PEDAL (IF EQUIPPED WITH MANUAL TRANSAXLE)
2 - THROTTLE PEDAL
3 - BRAKE PEDAL HOLDING TOOL
4 - STEERING WHEEL
5 - DRIVER'S SEAT
6 - BRAKE PEDAL

(7) Remove the four chassis brake tubes going to each brake, mounted in-line across the top of the junction block (Fig. 23).

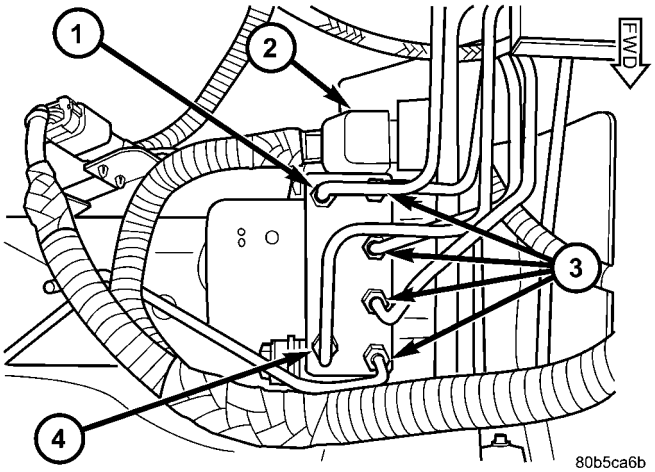

Fig. 23 BRAKE TUBE FITTINGS

1 - SECONDARY BRAKE TUBE FROM MASTER CYLINDER
2 - CAB CONNECTOR
3 - CHASSIS TUBES TO BRAKES
4 - PRIMARY BRAKE TUBE FROM MASTER CYLINDER

(8) Disconnect the 24-way wiring harness connector from the CAB (Fig. 23) using the following procedure. Grasp the lock on the 24-way connector and pull it up from the connector as far as possible. This will unlock and raise the connector out of the socket on the CAB.

(9) Remove the three bolts fastening the ICU to its mounting bracket (Fig. 24). Remove the ICU from the vehicle.

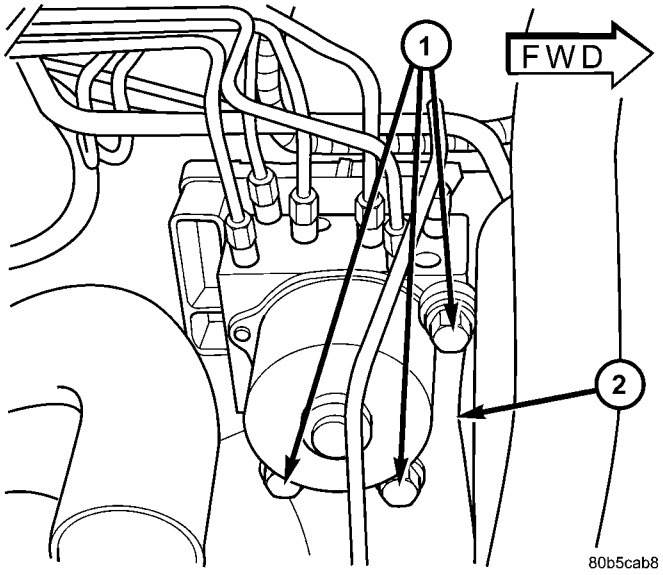

Fig. 24 ICU MOUNTING BOLTS

1 - MOUNTING BOLTS
2 - ICU MOUNTING BRACKET

(10) To separate the HCU from the CAB, (Refer to 5 - BRAKES/HYDRAULIC/MECHANICAL/ICU (INTEGRATED CONTROL UNIT) - DISASSEMBLY).

DISASSEMBLY - ICU

(1) Remove the ICU from the vehicle. (Refer to 5 - BRAKES/HYDRAULIC/MECHANICAL/ICU (INTEGRATED CONTROL UNIT) - REMOVAL)

(2) Disconnect the pump/motor wiring harness from the CAB (Fig. 20).

(3) Remove the 4 bolts (Fig. 25) attaching the CAB to the HCU.

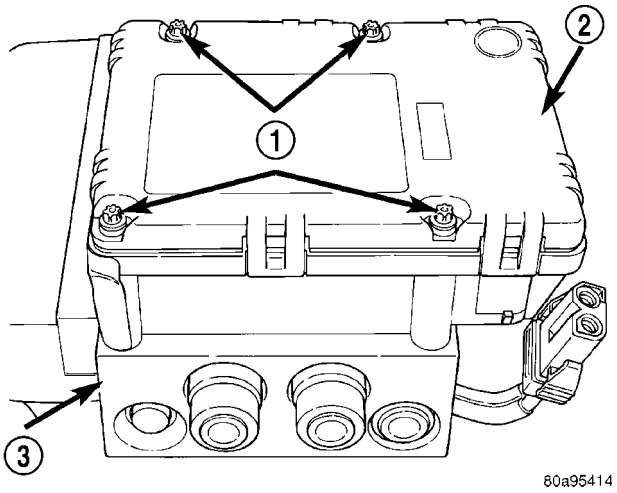

Fig. 25 (TYPICAL) CAB Attaching Bolts

1 - MOUNTING BOLTS
2 - CAB
3 - HCU VALVE BLOCK

ICU (INTEGRATED CONTROL UNIT) (Continued)

(4) Remove the CAB from the HCU (Fig. 26).

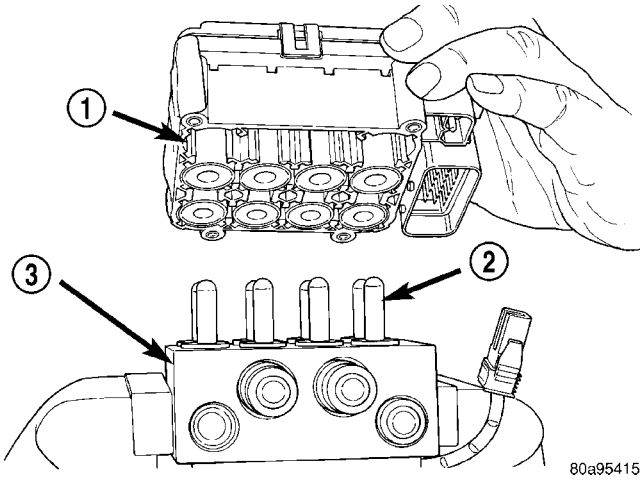

Fig. 26 (TYPICAL) Remove/Install CAB

1 - CAB
2 - HCU VALVES
3 - HCU VALVE BLOCK

ASSEMBLY - ICU

(1) Install the CAB (Fig. 26) on the HCU.

(2) Install the 4 bolts mounting the CAB (Fig. 25) to the HCU. Tighten the CAB mounting bolts to a torque of 2 N·m (17 in. lbs.).

(3) Plug the pump/motor wiring harness into the CAB.

(4) Install the ICU in the vehicle and bleed the base and ABS hydraulic systems. (Refer to 5 - BRAKES/HYDRAULIC/MECHANICAL/ICU (INTEGRATED CONTROL UNIT) - INSTALLATION)

INSTALLATION - ICU

(1) Install the ICU back in the vehicle on its mounting bracket (Fig. 24).

(2) Install isolators, washers and attaching bolts, mounting the ICU to its mounting bracket. Tighten the 3 HCU mounting bolts to a torque of 11 N·m (97 in. lbs.).

CAUTION: Before installing the 24-way connector in the CAB be sure that the seal is properly installed in the connector.

(3) Install the 24-way connector into the socket on the CAB (Fig. 23). The connector is installed using the following procedure. Position the 24-way connector in the socket on the CAB and carefully push it down as far as it will go. When connector is fully seated into the CAB socket push in the connector lock as far as it will go. This will pull the connector into the socket on the CAB and lock it in the installed position.

(4) Install the four chassis brake tubes (going to each brake) to the top of the ICU (Fig. 23). Tighten the tube fittings to 17 N·m (145 in. lbs.) torque with the aid of a crow foot wrench.

(5) Install the two brake tubes coming from the primary and secondary master cylinder ports to the top corners of the ICU (Fig. 23). Tighten the tube fittings to 17 N·m (145 in. lbs.) torque with the aid of a crow foot wrench.

(6) Install the air cleaner housing. Refer to 9 - ENGINE/AIR INTAKE SYSTEM.

(7) Remove the brake pedal holding tool.

(8) Install the remote ground cable onto the ground stud located on left shock tower.

(9) Bleed the base brakes and the ABS brakes hydraulic system. (Refer to 5 - BRAKES - ABS - STANDARD PROCEDURE)

(10) Road test vehicle to ensure proper operation of the base and ABS systems.

CLUTCH

TABLE OF CONTENTS

page

CLUTCH
DESCRIPTION 1
OPERATION 2
DIAGNOSIS AND TESTING
DIAGNOSIS AND TESTING - CLUTCH SYSTEM 3
DIAGNOSIS AND TESTING - DRIVE PLATE MISALIGNMENT 5
DIAGNOSIS AND TESTING - CLUTCH COVER AND DISC RUNOUT 5
DIAGNOSIS AND TESTING - CLUTCH CHATTER COMPLAINTS 6
STANDARD PROCEDURE - BLEEDING CLUTCH HYDRAULIC CIRCUIT 6
SPECIFICATIONS
CLUTCH 7
SPECIAL TOOLS 7
CLUTCH MASTER CYLINDER (2.7L/T850 MODELS)
REMOVAL 8
INSTALLATION 9
CLUTCH PEDAL
REMOVAL 9
INSTALLATION 10
CLUTCH PEDAL INTERLOCK SWITCH
DIAGNOSIS AND TESTING - CLUTCH PEDAL INTERLOCK SWITCH 10
REMOVAL 11
INSTALLATION 11
CLUTCH RELEASE BEARING AND LEVER
DESCRIPTION 12
OPERATION 12
REMOVAL
REMOVAL - T350 EQUIPPED MODELS 12
REMOVAL - T850 EQUIPPED MODELS 13
INSTALLATION
INSTALLATION - T350 EQUIPPED MODELS . 13
INSTALLATION - T850 EQUIPPED MODELS . 13
CLUTCH RELEASE CABLE (2.0L/T350 MODELS)
DESCRIPTION 15
REMOVAL 15
INSTALLATION 16
CLUTCH SLAVE CYLINDER (2.7L/T850 MODELS)
DESCRIPTION 16
OPERATION 16
REMOVAL 16
INSTALLATION 17
MODULAR CLUTCH
DESCRIPTION 17
REMOVAL 18
INSTALLATION 18

CLUTCH

DESCRIPTION

Manual transaxle equipped models (2.0L/2.7L) utilize a modular clutch assembly. The clutch system consists of a modular clutch assembly (Fig. 1), a sleeve type release bearing, a self adjusting clutch cable (2.0L models), hydraulic clutch release system (2.7L models), and a clutch pedal that is part of a brake/clutch pedal bracket assembly.

The modular clutch assembly consists of a single, dry-type clutch disc, a diaphragm style clutch cover, and an integrated flywheel. The clutch cover is riveted to the flywheel, containing the clutch disc within. The modular clutch can only be serviced as an assembly.

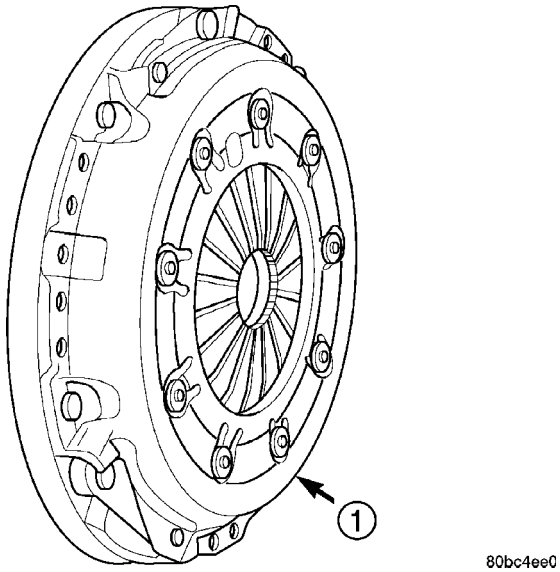

Fig. 1 Modular Clutch Assembly

1 - MODULAR CLUTCH ASSEMBLY

CLUTCH (Continued)

OPERATION

MECHANICAL

The clutch assembly is designed to transmit power from the engine to the manual transaxle. This is accomplished by the friction and clamping force generated when the spring loaded pressure plate locks the clutch disc to the flywheel (Fig. 2). The clutch disc, which is splined to the transaxle input shaft, transmits power until the center of the diaphragm spring is depressed, and the clamp force is removed from the disc.

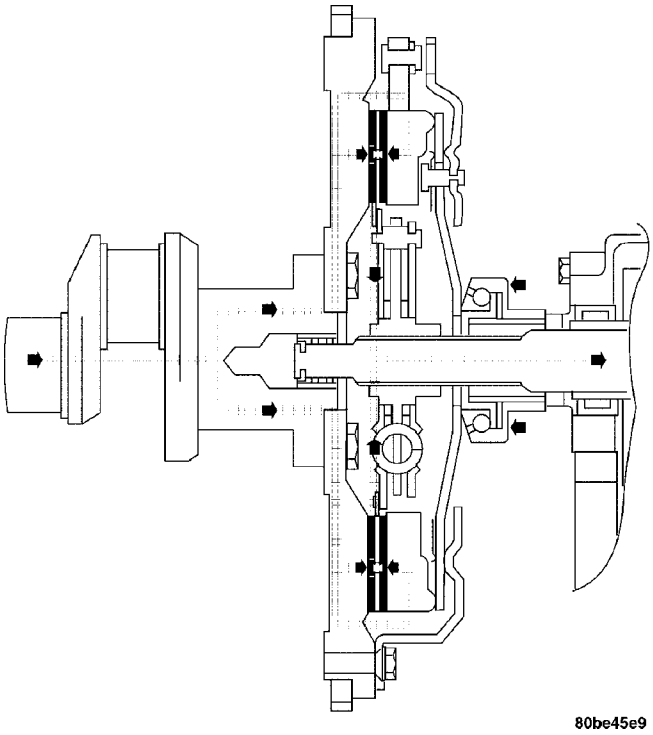

Fig. 2 Clutch Coupling Powerflow - Typical

RELEASE SYSTEM - 2.0L/T350 TRANSAXLE

A sleeve-type release bearing is used to engage and disengage the clutch cover pressure plate. The release bearing is operated by a pivoting release lever in the clutch housing (Fig. 4). The lever pivots on a ball stud within the housing. The release lever is actuated by a self-adjusting clutch cable (Fig. 3).

The clutch cable has a unique self-adjuster mechanism (Fig. 3) built into the cable which compensates for clutch disc wear. The preload spring maintains tension on the cable. This tension keeps the clutch release bearing (Fig. 4) continuously loaded against the fingers of the clutch cover assembly. The cable requires no maintenance or lubrication.

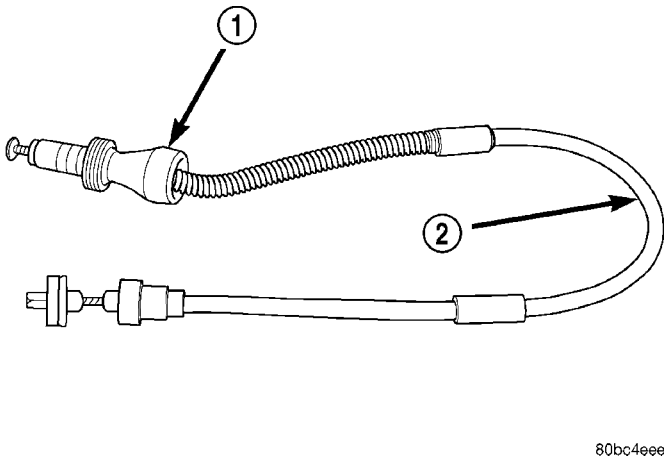

Fig. 3 Clutch Cable Assembly

1 - ADJUSTER MECHANISM
2 - CLUTCH CABLE

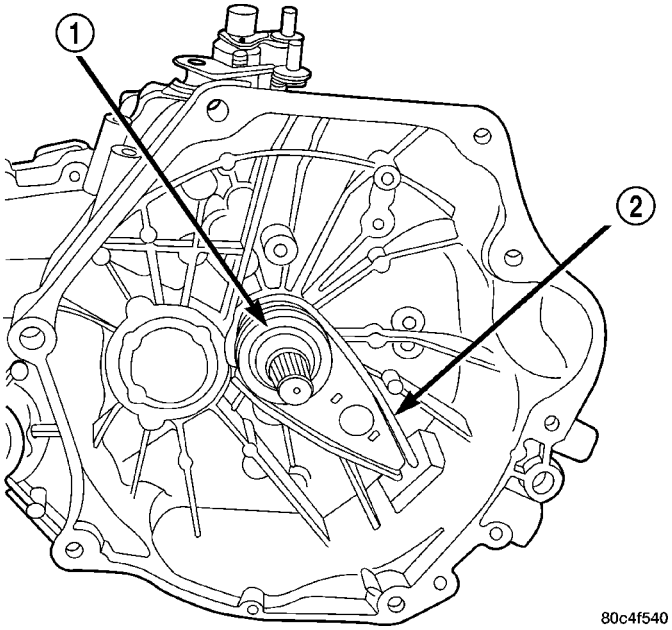

Fig. 4 Clutch Release Bearing and Lever (Typical)

1 - RELEASE BEARING
2 - LEVER

CLUTCH (Continued)

RELEASE SYSTEM - 2.7L/T850 TRANSAXLE

The clutch hydraulic system is responsible for engaging and disengaging the clutch. Depressing the clutch pedal develops fluid pressure in the clutch master cylinder. This pressure is transmitted to the slave cylinder through a connecting line. In turn, the slave cylinder operates the clutch release lever (Fig. 5).

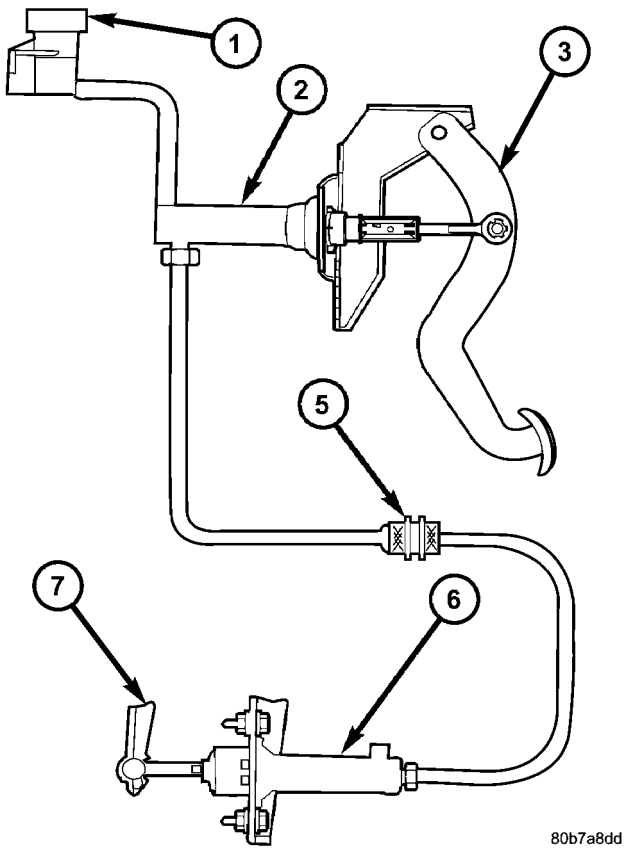

Fig. 5 Clutch Hydraulic System—Typical

1 - RESERVOIR
2 - MASTER CYLINDER
3 - CLUTCH PEDAL
5 - QUICK CONNECT
6 - SLAVE CYLINDER
7 - RELEASE LEVER

The slave cylinder spring causes the release lever to hold the release bearing in constant contact with the diaphragm spring (release bearing preload). During a clutch pedal actuation, the hydraulic fluid pressure applies additional force to the release lever and bearing (Fig. 6). As additional force is applied, the bearing presses the diaphragm spring fingers inward on the fulcrums. This action moves the pressure plate rearward, relieving clamp force on the disc.

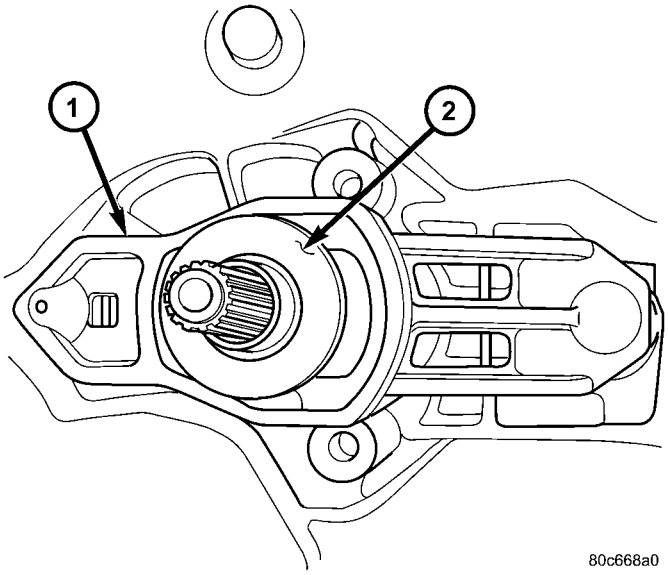

Fig. 6 Clutch Release Bearing and Lever (2.7L/T850)

1 - RELEASE LEVER
2 - RELEASE BEARING

DIAGNOSIS AND TESTING

DIAGNOSIS AND TESTING - CLUTCH SYSTEM

Clutch problem diagnosis will generally require a road test to determine the type of fault. Component inspection will then determine the problem after road testing.

Drive the vehicle at normal speeds during road test. Shift the transaxle through all gear ranges and observe clutch action. If chatter, grab, slip, or improper release is experienced, remove and inspect the clutch components. If the problem is noise or hard shifting, further diagnosis may be needed. The transaxle or other driveline components may actually be at fault.

CLUTCH (Continued)

SERVICE DIAGNOSIS - CLUTCH GRAB/CHATTER

CONDITION	POSSIBLE CAUSES	CORRECTION
CLUTCH DISC FACING COVERED WITH OIL OR GREASE	Oil leak at engine rear main or transaxle input shaft seal.	Correct leak and replace modular clutch assembly.
	Too much grease applied to splines of disc and input shaft.	Apply lighter coating of grease to splines.
NO FAULT FOUND WITH CLUTCH COMPONENTS	Problem actually related to suspension or driveline component.	Further diagnosis required. Check engine/transmission mounts, suspension attaching parts and other driveline components as needed.
	Engine related problems.	Check EFI and ignition systems.
PARTIAL ENGAGEMENT OF CLUTCH DISC	Clutch cover, spring, or release fingers bent, distorted (rough handling, improper assembly).	Replace modular clutch assembly.
	Clutch disc damaged or distorted.	Replace modular clutch assembly.
	Clutch misalignment.	Verify modular clutch pilot plate alignment to crankshaft. Replace the modular clutch assembly if the pilot plate is loose or bent.

SERVICE DIAGNOSIS - CLUTCH SLIPS

CONDITION	POSSIBLE CAUSES	CORRECTION
DISC FACING WORN OUT	Normal wear.	Replace modular clutch assembly.
	Driver frequently rides (slips) clutch, results in rapid wear, overheating.	Replace modular clutch assembly.
	Insufficient clutch cover diaphragm spring tension	Replace modular clutch assembly.
CLUTCH DISC FACING CONTAMINATED WITH OIL OR GREASE	Leak at rear main oil seal or transaxle input shaft seal	Replace leaking seals. Replace modular clutch assembly.
	Excessive amount of grease applied to input shaft splines	Apply less grease to input shaft. Replace modular clutch assembly
	Road splash, water entering housing	Seal housing. Inspect clutch assembly.
CLUTCH IS RUNNING PARTIALLY DISENGAGED	Release bearing sticking or binding, does not return to normal running position.	Verify that bearing is actually binding. Then, replace bearing and transmission front bearing retainer if sleeve surface is damaged.
	Cable self-adjuster mechanism sticking or binding causing high preload (2.0L Models).	Verify that self-adjuster is free to move.
CLUTCH DISC FACINGS HAVE FRACTURED INTO SMALL PIECES	Leak at rear main or transaxle input shaft seal	Replace seal. Replace modular clutch assembly.
	Excessive heat from slippage	Replace modular clutch assembly

CLUTCH (Continued)

SERVICE DIAGNOSIS - IMPROPER CLUTCH RELEASE

CONDITION	POSSIBLE CAUSES	CORRECTION
CLUTCH DISC BINDS ON INPUT SHAFT SPLINES	Clutch disc hub splines damaged during installation	Clean, smooth, and lubricate disc and shaft splines. Replace modular clutch assembly, or clutch disc, and/or input shaft if splines are severely damaged.
	Input shaft splines rough, damaged.	Clean input shaft splines. Then lube.
	Corrosion or rust formations on splines of input shaft and disc	Clean input shaft splines and disc splines, then lube
CLUTCH DISC RUSTED TO FLYWHEEL AND/OR PRESSURE PLATE	Occurs in vehicles stored or not driven for extended period of time. Also occurs after steam cleaning if vehicle is not used for extended period.	Replace modular clutch assembly
CLUTCH WILL NOT DISENGAGE PROPERLY	Disc bent, distorted during transaxle installation	Replace modular clutch assembly
	Clutch cover diaphragm spring damaged during transaxle installation	Replace modular clutch assembly
	Release fork bent, loose, or damaged	Replace fork if worn or damaged
	Clutch cable binding or routed incorrectly (2.0L Models).	Check and correct cable routing.
	Self-adjuster in cable not functioning properly, resulting in excess cable slack (2.0L Models).	Pull on cable conduit at transaxle (as if disconnecting cable) to check adjuster operation.

SERVICE DIAGNOSIS - CLUTCH PEDAL NOISE

CONDITION	POSSIBLE CAUSES	CORRECTION
CLUTCH PEDAL SQUEAKS WHEN DEPRESSED TO FLOOR	Pedal bushings worn out or inadequate lubrication	Replace or lubricate bushings
	Clutch pedal return spring worn out	Lubricate or replace return spring
CLUTCH PEDAL SQUEAKS DURING OPERATION	Clutch release lever pivot stud has inadequate lubrication	Lubricate or replace clutch release lever

DIAGNOSIS AND TESTING - DRIVE PLATE MISALIGNMENT

Common causes of misalignment are:

- Heat warping
- Mounting drive plate on a dirty crankshaft flange
- Incorrect bolt tightening
- Improper seating on the crankshaft shoulder
- Loose crankshaft bolts

Clean the crankshaft flange before mounting the drive plate. Dirt and grease on the flange surface may misalign the flywheel, causing excessive runout. Use new bolts when mounting drive plate to crankshaft. Tighten drive plate bolts to specified torque only. Over-tightening can distort the drive plate hub causing excessive runout.

DIAGNOSIS AND TESTING - CLUTCH COVER AND DISC RUNOUT

Check condition of the clutch cover before installation. A warped cover or diaphragm spring will cause grab and/or incomplete release or engagement. Use care when handling the clutch assembly. Impact can distort the cover, diaphragm spring, and release fingers.

CLUTCH (Continued)

DIAGNOSIS AND TESTING - CLUTCH CHATTER COMPLAINTS

For all clutch chatter complaints, perform the following:

(1) Check for loose, misaligned, or broken engine and transmission mounts. If present, they should be corrected at this time. Test vehicle for chatter. If chatter is gone, there is no need to go any further.

(2) If chatter persists, check hydraulic clutch release system is functioning properly.

(3) Check for loose connections in drivetrain. Correct any problems and determine if clutch chatter complaints have been satisfied. If not:

(a) Remove transaxle.

(b) Check to see if the release bearing is sticky or binding. Replace bearing, if needed.

(c) Check linkage for excessive wear on the pivot stud and fork fingers. Replace all worn parts.

(d) Check clutch assembly for contamination (dirt, oil). Replace clutch assembly, if required.

(e) Check to see if the clutch disc hub splines are damaged. Replace with new clutch assembly, if necessary.

(f) Check input shaft splines for damage. Replace, if necessary.

(g) Check for uneven wear on clutch fingers.

(h) Check for broken clutch cover diaphragm spring fingers. Replace with new clutch assembly, if necessary.

STANDARD PROCEDURE - BLEEDING CLUTCH HYDRAULIC CIRCUIT

NOTE: It is necessary to bleed the clutch hydraulic release system if the system has lost an excessive amount of fluid and has ingressed air into the circuit. Air in the system typically results in a spongy pedal feel, and/or improper clutch release. If air cannot be removed from the system using this procedure, it is necessary to replace BOTH the clutch master cylinder and slave cylinder assemblies.

From driver's seat, actuate clutch pedal 60–100 times. Verify clutch operation/pedal feel. If pedal still feels spongy, or clutch does not fully disengage, excessive air is still trapped within the system. Perform the following procedure:

(1) Verify fluid level in clutch master cylinder reservoir. Top off with DOT 3 brake fluid as necessary.

(2) Raise vehicle on hoist.

(3) Remove clutch slave cylinder/damper assembly from the transaxle case (Fig. 7), **but do not disconnect from the hydraulic system**. Lift nylon tab with a small screwdriver, and then depress cylinder inward towards case and rotating cylinder 60° counter-clockwise. Allow the slave cylinder hang, making it the lowest part of the system.

CAUTION: While slave cylinder is detached from the transaxle, DO NOT actuate the clutch master cylinder. Damage to the slave cylinder will result.

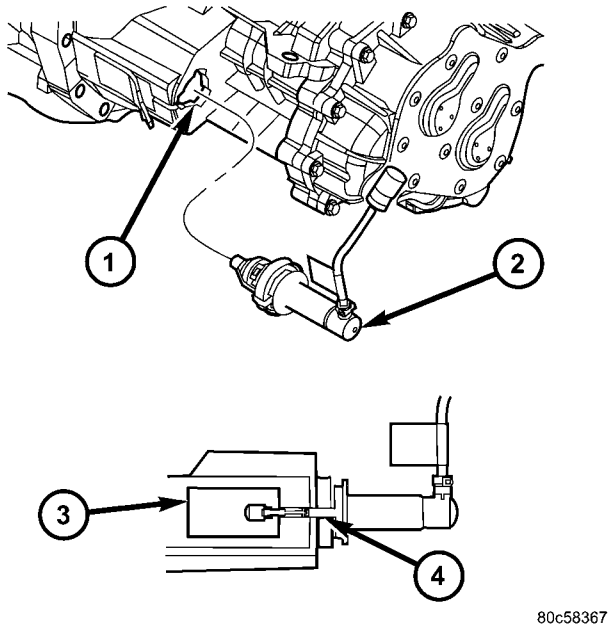

Fig. 7 Slave Cylinder Removal/Installation

1 - MOUNTING HOLE
2 - SLAVE CYLINDER
3 - ACCESS HOLE
4 - NYLON ANTI-ROTATION TAB

(4) Depress slave cylinder pushrod until it bottoms and then release. Repeat this at least ten (10) times, forcing trapped air upwards and out of the system.

(5) Install clutch slave cylinder into position, noting orientation of different sized lugs. While depressing inward, rotate slave cylinder clockwise until nylon locating tab rests in transaxle case cutout, and the hydraulic tube is vertical (Fig. 7).

(6) Lower vehicle.

(7) Check and adjust clutch master cylinder fluid level. Actuate clutch pedal thirty (30) times. Verify clutch operation/pedal feel. If pedal still feels spongy, or clutch does not fully disengage, air is still trapped within the system. Repeat Step 3 - Step 7 until air is purged. If several attempts at purging air from the system are unsuccessful, replace both the clutch master cylinder and slave cylinder assemblies.

(8) Raise vehicle.

(9) Lower vehicle.

(10) Top off clutch master cylinder fluid level with DOT 3 brake fluid as necessary.

CLUTCH (Continued)

SPECIFICATIONS

CLUTCH

TORQUE SPECIFICATIONS

DESCRIPTION	N·m	Ft. Lbs.	In. Lbs.
Clutch Master Cylinder Mounting Nuts	27	20	—
Clutch Pedal Pivot Shaft Nut	31	23	—
Modular Clutch-to-Drive Plate	88	65	—
Transaxle-to-Engine Mounting Bolts	95	70	—

SPECIAL TOOLS

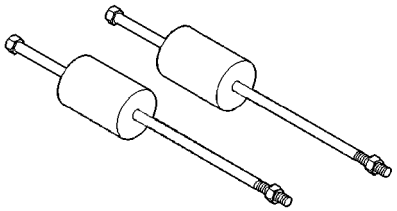

Puller, C-3752

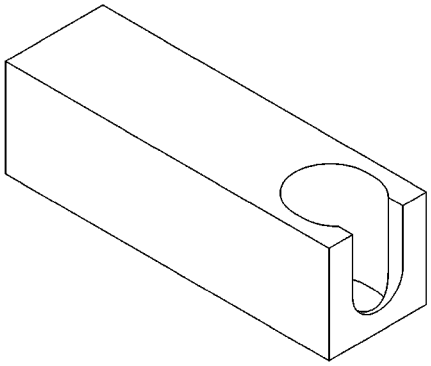

Remover/Installer, 6891

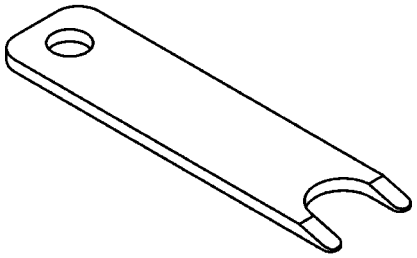

Disconnect Tool, 6638A

CLUTCH MASTER CYLINDER (2.7L/T850 MODELS)

REMOVAL

(1) Open hood.

(2) Disconnect battery negative cable at strut tower.

(3) Remove air cleaner assembly.

(4) Remove clutch master cylinder reservoir from speed control servo bracket (Fig. 8).

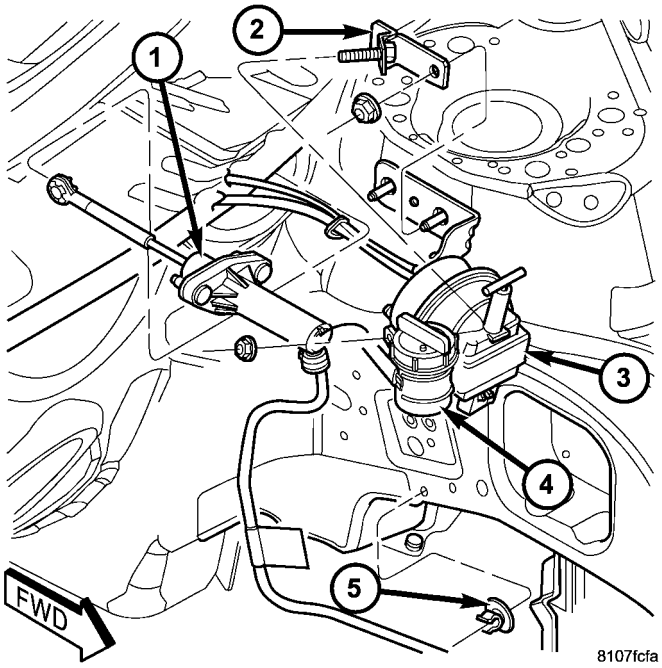

Fig. 8 Clutch Master Cylinder and Reservoir

1 - CLUTCH MASTER CYLINDER
2 - BRACKET
3 - SPEED CONTROL SERVO
4 - RESERVOIR

(5) Lift purge solenoid off of mounting bracket and secure out of way.

(6) Disconnect speed control servo connector. Remove speed control servo/bracket from strut tower and secure out of way.

(7) Raise vehicle on hoist.

(8) Using tool 6638A, disconnect clutch hydraulic circuit quick-connect fitting (Fig. 9).

(9) Lower vehicle.

(10) Open driver's door.

(11) Remove fuse box access cover.

(12) Remove instrument panel lower silencer panel.

(13) Disconnect clutch master cylinder pushrod from clutch pedal pin (Fig. 10).

(14) From inside vehicle, remove two (2) master cylinder-to-panel mounting nuts (Fig. 10).

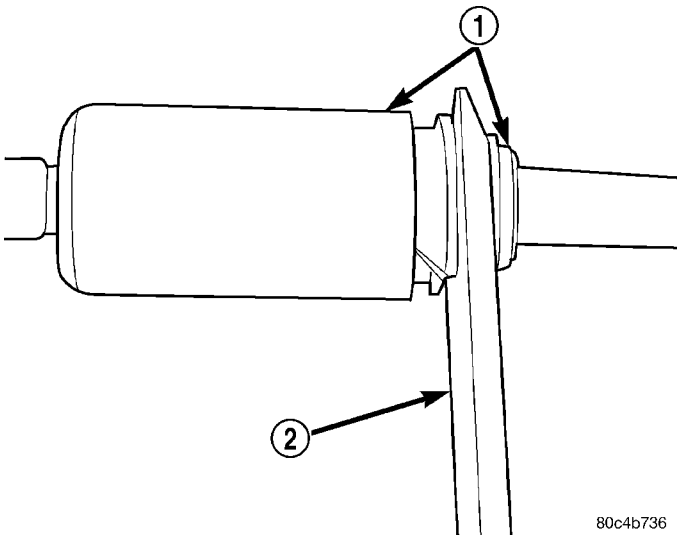

Fig. 9 Disconnect Hydraulic Circuit Using Tool 6638A

1 - QUICK CONNECT FITTING
2 - TOOL 6638A

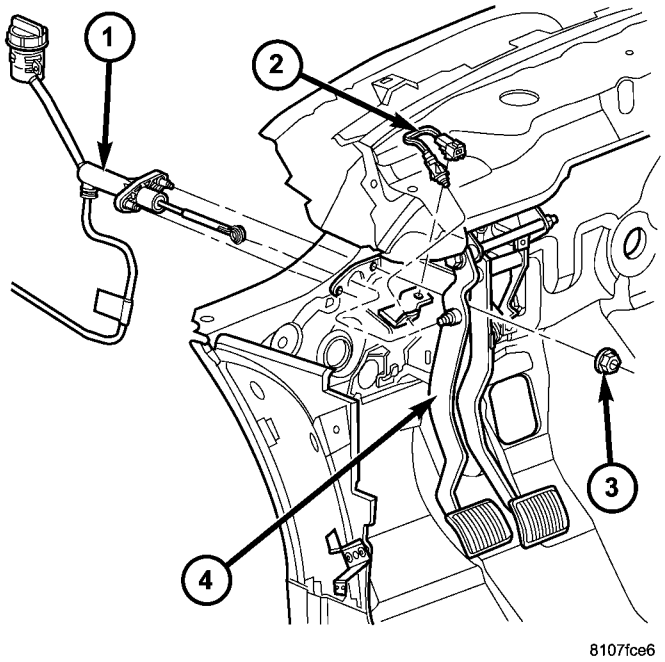

Fig. 10 Clutch Master Cylinder Removal/Installation

1 - CLUTCH MASTER CYLINDER
2 - INTERLOCK SWITCH
3 - NUT (2)
4 - CLUTCH PEDAL

(15) Work master cylinder and plumbing out of engine compartment, using care not to bend or damage plumbing. Note routing of plumbing for reassembly.

CLUTCH MASTER CYLINDER (2.7L/T850 MODELS) (Continued)

INSTALLATION

(1) Install master cylinder and plumbing into position as removed. Use care not to bend or damage plumbing.

(2) Install master cylinder-to-dash panel. From inside vehicle, install and torque two (2) nuts to 27 N·m (20 ft. lbs.) (Fig. 10).

(3) Connect master cylinder pushrod to clutch pedal pin. An audible click should be heard. Verify plastic retainer is intact and secures pushrod. **If retainer is damaged, it MUST be replaced.**

(4) Install instrument panel lower silencer panel.

(5) Install fuse box access panel.

(6) Raise vehicle.

(7) Route master cylinder plumbing into position and connect to slave cylinder. An audible click should be heard. Verify by pulling outward on connection.

(8) Lower vehicle.

(9) Install purge solenoid to mounting bracket.

(10) Connect brake master cylinder level sensor connector.

(11) Install speed control servo and connect connector.

(12) Install clutch master cylinder reservoir and torque retaining nut to 6 N·m (51 in. lbs.) (Fig. 8).

(13) Install air cleaner assembly.

(14) Install battery negative cable.

(15) Verify clutch pedal operation. Actuate clutch pedal at least ten (10) times to purge any trapped air from system.

(16) Check and adjust clutch master cylinder fluid level.

CLUTCH PEDAL

REMOVAL

2.0L-Equipped Models

(1) Remove instrument panel left lower sound insulator.

(2) Using suitable pliers, remove clutch pedal return spring (Fig. 11).

(3) Remove clutch upstop spacer retainer clip from pedal pin (Fig. 11). Remove cable/spacer from pedal.

(4) Remove clutch pedal pivot shaft and nut.

(5) Remove clutch pedal assembly (Fig. 12). Inspect bushings for excessive wear and replace as necessary.

2.7L-Equipped Models

(1) Remove instrument panel left lower sound insulator.

(2) Remove clutch master cylinder pushrod from clutch pedal pin. Inspect plastic retainer. **If plastic retainer is damaged/broken in any way, it MUST be replaced.**

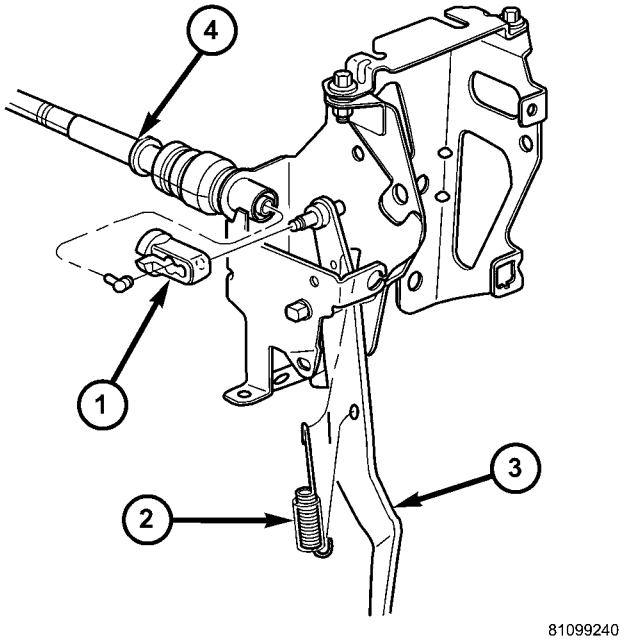

Fig. 11 Clutch Pedal Upstop Spacer and Return Spring

1 - UPSTOP SPACER
2 - RETURN SPRING
3 - CLUTCH PEDAL
4 - CLUTCH CABLE

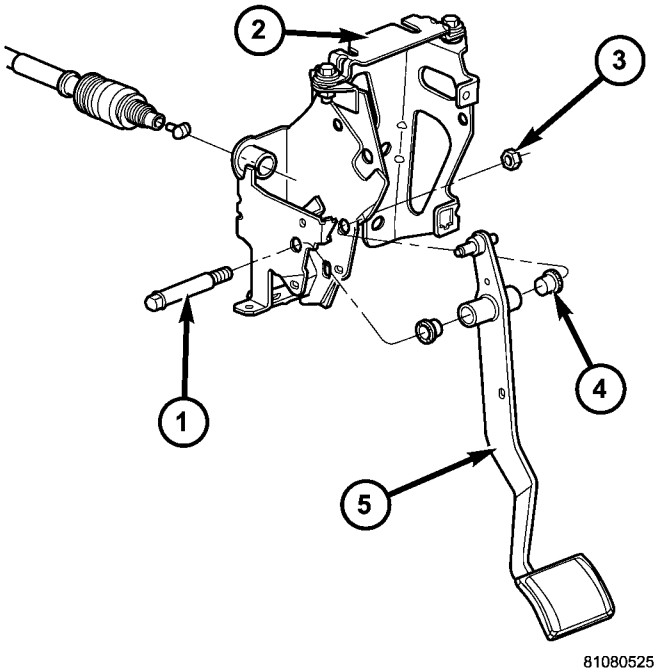

Fig. 12 Clutch Pedal Removal/Installation (2.0L Models)

1 - SHAFT
2 - BRACKET
3 - NUT
4 - BUSHING (2)
5 - PEDAL

CLUTCH PEDAL (Continued)

(3) Remove clutch pedal pivot shaft and nut.

(4) Remove clutch pedal assembly (Fig. 13). Inspect bushings and replace as necessary.

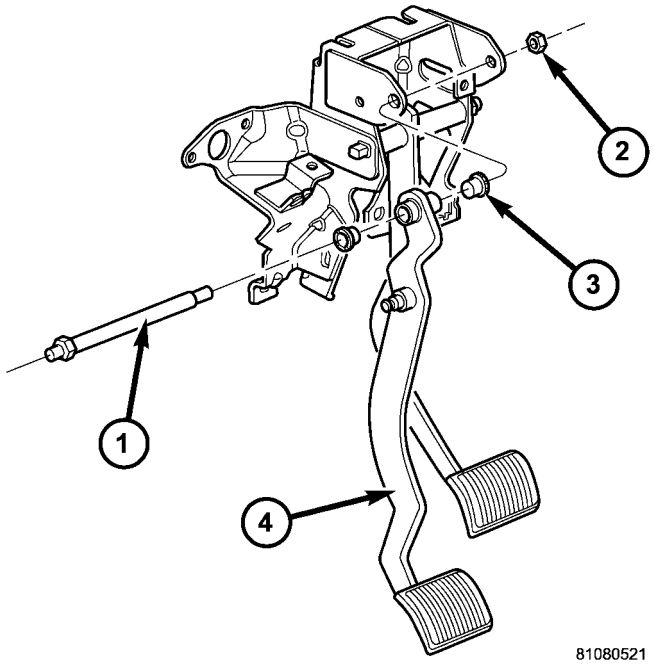

Fig. 13 Clutch Pedal Removal/Installation (2.7L Models)

1 - SHAFT
2 - NUT
3 - BUSHING (2)
4 - PEDAL

INSTALLATION

2.0L-Equipped Models

(1) Install clutch pedal assembly into position.

(2) Install pivot shaft and nut as shown in (Fig. 12) and torque to 31 N·m (23 ft. lbs.) torque.

(3) Install clutch cable/upstop spacer to clutch pedal pin (Fig. 11). An audible “click” should be heard. Verify upstop spacer retainer is intact and secures spacer.

(4) Install clutch pedal return spring (Fig. 11). Install to pedal blade first, then slip into position at pedal bracket using suitable pliers.

(5) Verify proper clutch pedal operation, as well as proper interlock switch contact.

(6) Install instrument panel left lower sound insulator.

2.7L-Equipped Models

(1) Install clutch pedal assembly into position.

(2) Install pivot shaft and nut as shown in (Fig. 13) and torque to 34 N·m (25 ft. lbs.).

(3) Install clutch master cylinder pushrod. An audible “click” should be heard. Verify plastic retainer is intact and secures pushrod. **If retainer is damaged, it MUST be replaced.**

(4) Verify proper clutch pedal operation, as well as proper interlock switch contact.

(5) Install instrument panel left lower sound insulator.

CLUTCH PEDAL INTERLOCK SWITCH

DIAGNOSIS AND TESTING - CLUTCH PEDAL INTERLOCK SWITCH

CLUTCH PEDAL INTERLOCK SWITCH–ELECTRICAL TEST

Disconnect clutch pedal interlock switch harness from instrument panel wiring harness. Using an ohmmeter, check for continuity between the two terminals in the connector on the switch harness. There should be no continuity between the terminals when the switch is in its normal (fully extended) position. When the switch is depressed more than 1.25 mm (0.050), the ohmmeter should show continuity (zero ohms).

If ohmmeter readings do not fall within these ranges, the switch is defective, and must be replaced.

CLUTCH PEDAL INTERLOCK SWITCH–MECHANICAL TEST

With the park brake set and the vehicle **IN NEUTRAL,** turn the key to the start position. The vehicle should not crank. If the vehicle cranks, the switch is defective (shorted out) and must be replaced. If the vehicle does not crank proceed to the next step.

WARNING: BEFORE PERFORMING THIS STEP, BE SURE THAT THE AREA IN FRONT OF THE VEHICLE IS CLEAR OF OBSTRUCTIONS AND PEOPLE. VEHICLE MAY MOVE WHEN PERFORMING THIS TEST.

With the park brake set and the vehicle **IN GEAR,** turn the key to the start position and hold it there.

Slowly depress the clutch pedal and feel for any vehicle motion when the starter is energized. If there is no motion the switch is working properly.

If motion is felt, check to see if the switch is making contact when the pedal is between 25 mm (1.0 in.) and 6 mm (0.25 in.) from the floor. If this condition is met, then the problem is either the clutch or the self-adjusting cable (See “Clutch Will Not Disengage Properly”). If this condition is not met, then the switch mounting tab on the brake bracket is bent, and the brake bracket must be replaced.

If vehicle will not crank, even with clutch pedal pressed to the floor, refer to “Service Diagnosis-Clutch Pedal Position Switch” chart in this section.

CLUTCH PEDAL INTERLOCK SWITCH (Continued)

SERVICE DIAGNOSIS–CLUTCH PEDAL POSITION SWITCH

CONDITION	POSSIBLE CAUSE	CORRECTION
ENGINE WON'T CRANK WHEN CLUTCH PEDAL IS DEPRESSED TO THE FLOOR	Switch does not have continuity when plunger is depressed 1.25 mm	Defective switch. Replace switch.
	Switch plunger is not depressed when clutch pedal is depressed to the floor.	Floor mat or other obstruction interferes with clutch pedal movement.
	Problem is related to other components in the starting circuit.	Check other components in the starting circuit. Refer to Section 8A.

REMOVAL

(1) Disconnect battery negative cable.
(2) Remove steering column lower panel.
(3) Remove knee bolster.
(4) Disconnect position switch connector.
(5) Depress wing tabs on switch and push switch out of mounting bracket (Fig. 14) (Fig. 15).

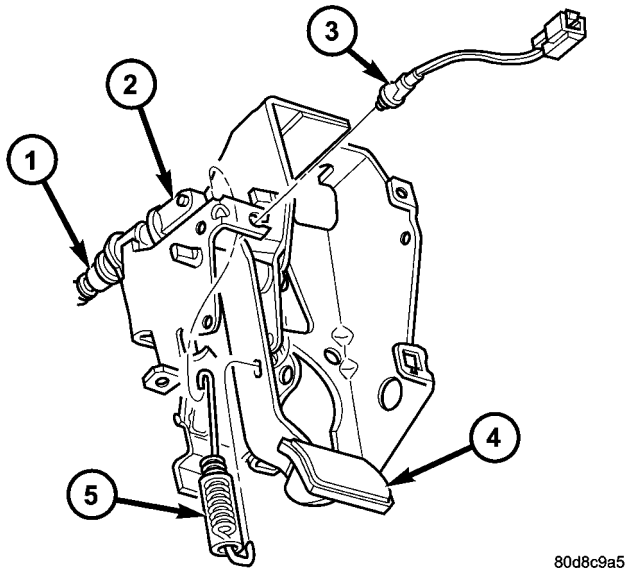

Fig. 14 Clutch Pedal Interlock Switch (2.0L Models)

1 - CLUTCH CABLE
2 - UPSTOP SPACER
3 - CLUTCH PEDAL INTERLOCK SWITCH
4 - CLUTCH PEDAL
5 - CLUTCH PEDAL RETURN SPRING

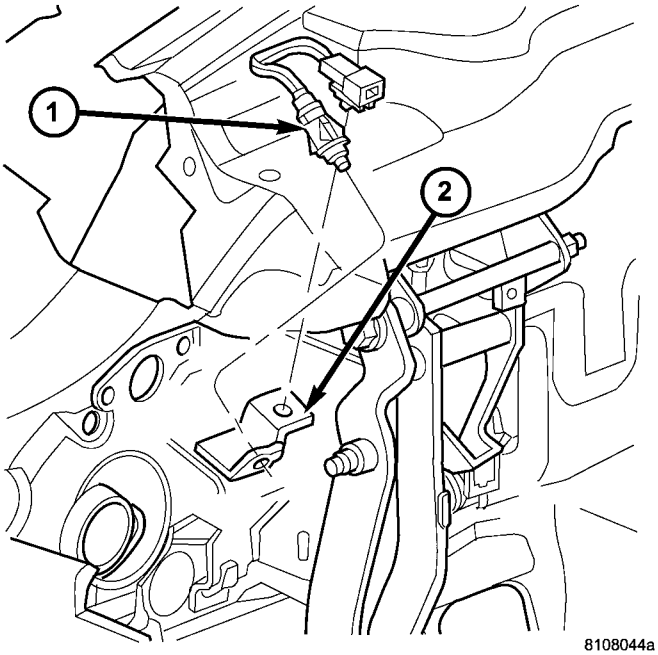

Fig. 15 Clutch Pedal Interlock Switch (2.7L Models)

1 - INTERLOCK SWITCH
2 - BRACKET

INSTALLATION

(1) Slide switch wires through slot in bracket.
(2) Line up switch tab with slot in bracket and push switch into position (Fig. 14) (Fig. 15).
(3) Attach switch connector.
(4) Install knee bolster.
(5) Install steering column lower panel.
(6) Connect battery negative cable.

CLUTCH RELEASE BEARING AND LEVER

DESCRIPTION

A conventional release bearing is used to engage and disengage the clutch pressure plate. The clutch release bearing is mounted on the transaxle front bearing retainer. The bearing is attached to and operated by the release lever (Fig. 16) (Fig. 17), which moves the bearing into contact with the clutch cover diaphragm spring.

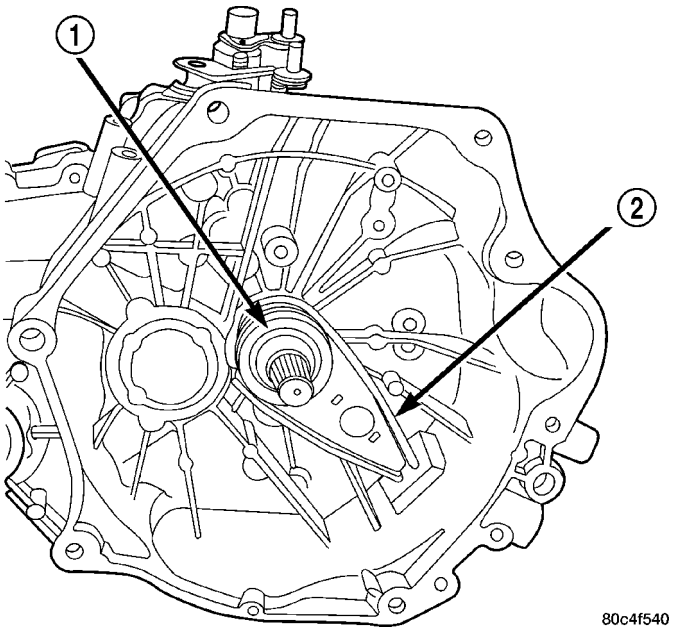

Fig. 16 Clutch Release Bearing and Lever—Typical

1 - RELEASE BEARING
2 - RELEASE LEVER

OPERATION

The release bearing is operated by the release lever (Fig. 16) (Fig. 17). Slave cylinder force causes the release lever to move the release bearing into contact with the diaphragm spring. As additional force is applied, the bearing presses the diaphragm spring fingers inward on the fulcrums. This action moves the pressure plate rearward, relieving clamping force on the clutch disc. Releasing pedal pressure removes clutch hydraulic pressure. The release bearing then moves away from the diaphragm spring which allows the pressure plate to exert clamping force on the clutch disc.

REMOVAL

REMOVAL - T350 EQUIPPED MODELS

(1) Remove the transaxle from the vehicle. (Refer to 21 - TRANSMISSION/TRANSAXLE/T350 MANUAL - REMOVAL)

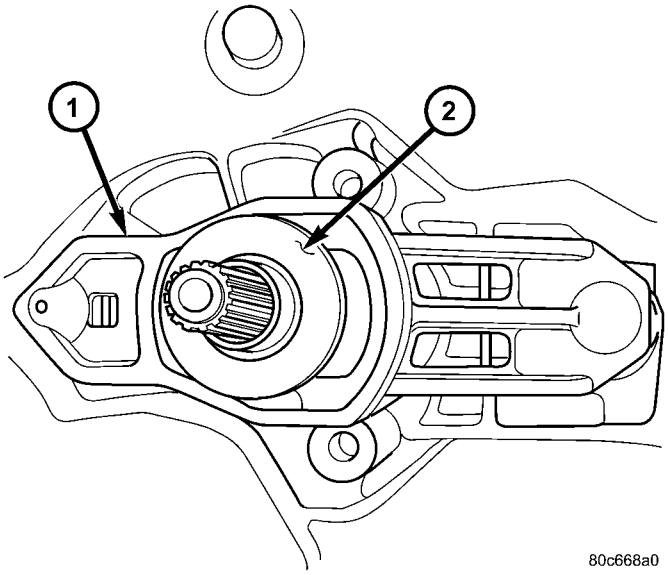

Fig. 17 Clutch Release Bearing and Lever (2.7L/ T850)

1 - RELEASE LEVER
2 - RELEASE BEARING

(2) Move the lever and bearing assembly (Fig. 18) to a vertical in-line position. Grasp the release lever with two hands in the pivot stud socket area. Pull with even pressure and the lever will pop off the pivot–stud. Do not use a screwdriver or pry bar to pop off the lever. This may damage the spring clip on the lever.

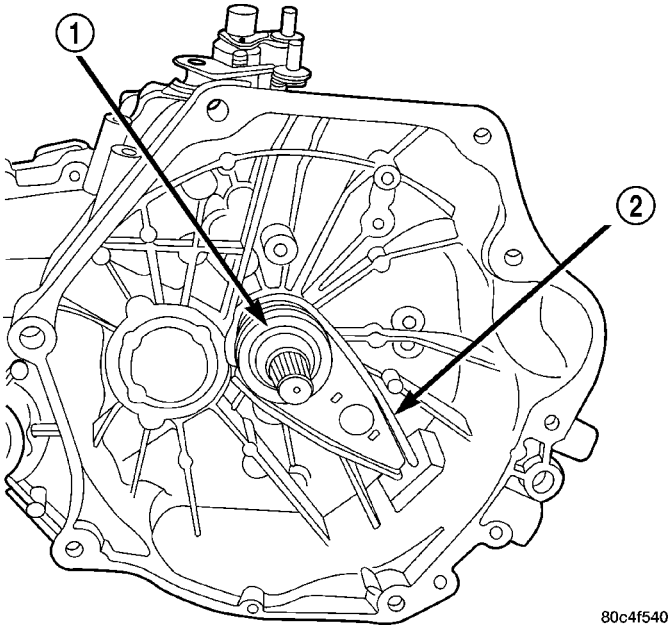

Fig. 18 Clutch Release Bearing and Lever

1 - RELEASE BEARING
2 - RELEASE LEVER

CLUTCH RELEASE BEARING AND LEVER (Continued)

(3) As a unit, remove the lever from the bearing thrust plate. Be careful not to damage retention tabs on bearing.

(4) Examine the condition of the bearing. **It is pre-lubricated and sealed and should not be immersed in oil or solvent.**

(5) The bearing should turn smoothly when held in the hand under a light thrust load. A light drag caused by the lubricant fill is normal. If the bearing is noisy, rough, or dry, replace the complete bearing assembly with a new bearing.

(6) Check the condition of the pivot stud spring clips on back side of clutch release lever. If the clips are broken or distorted, replace the release lever.

REMOVAL - T850 EQUIPPED MODELS

(1) Remove transaxle assembly. (Refer to 21 - TRANSMISSION/TRANSAXLE/T850 MANUAL - REMOVAL)

(2) Remove modular clutch assembly from input shaft.

(3) Grasp clutch release lever and bearing (Fig. 19) with both hands and pull outward using moderate pressure to release lever from pivot ball(s).

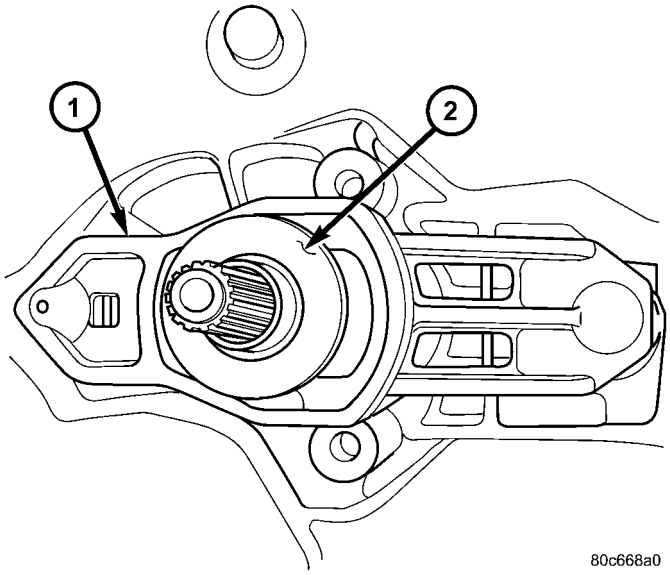

Fig. 19 Release Bearing and Lever (2.7L/T850)

1 - RELEASE LEVER
2 - RELEASE BEARING

(4) Separate release bearing from lever.

NOTE: Remove release lever pivot ball(s) ONLY if replacement is necessary.

(5) Remove pivot ball(s) using slide hammer C-3752 and remover/installer 6891 (Fig. 20).

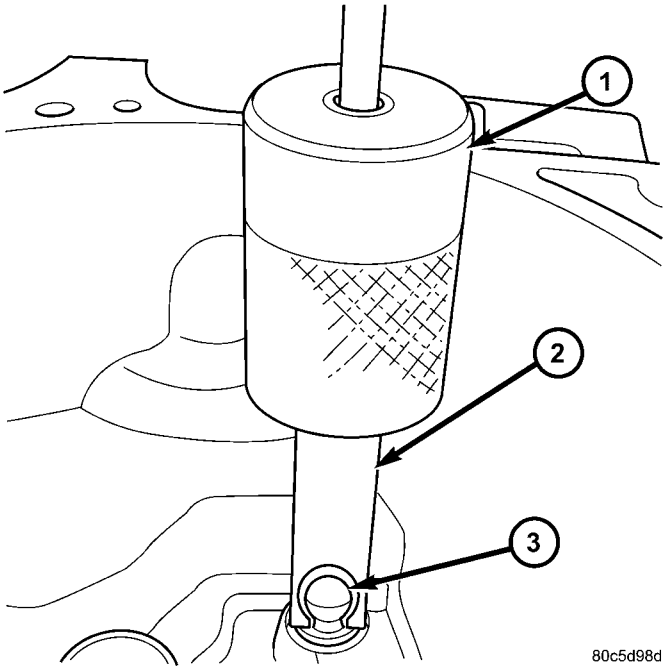

Fig. 20 Pivot Ball Removal/Installation

1 - C-3752 SLIDE HAMMER
2 - REMOVER/INSTALLER 6891
3 - PIVOT BALL

INSTALLATION

INSTALLATION - T350 EQUIPPED MODELS

(1) The pivot ball pocket in the lever, as well as the lever arms should be lubricated with grease prior to installation.

(2) Assemble the lever to the bearing. The small pegs on the bearing must go over the lever arms.

(3) Slide the bearing and lever assembly onto the input shaft bearing retainer, as a unit (Fig. 18).

(4) Snap the clutch release lever onto the pivot ball.

(5) Reinstall transaxle assembly. (Refer to 21 - TRANSMISSION/TRANSAXLE/T350 MANUAL - INSTALLATION)

INSTALLATION - T850 EQUIPPED MODELS

(1) If removed, install **new** release lever pivot ball(s) using slide hammer C-3752 and remover/installer 6891 (Fig. 21) (Fig. 22).

(2) Install clutch release bearing to lever. Apply grease to interface points. Make sure release bearing retainers engage lever pocket as shown in (Fig. 23).

(3) Apply grease to pivot ball, and on release lever at slave cylinder contact point.

CLUTCH RELEASE BEARING AND LEVER (Continued)

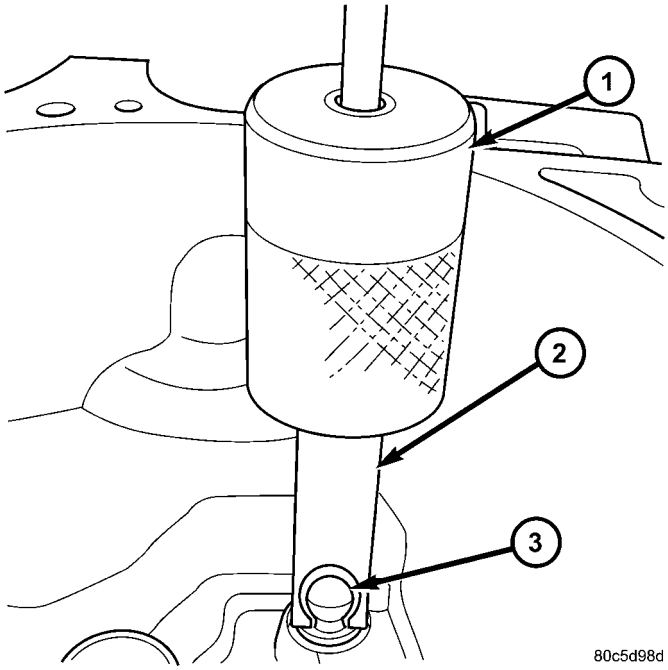

Fig. 21 Pivot Ball Removal/Installation

1 - C-3752 SLIDE HAMMER
2 - REMOVER/INSTALLER 6891
3 - PIVOT BALL

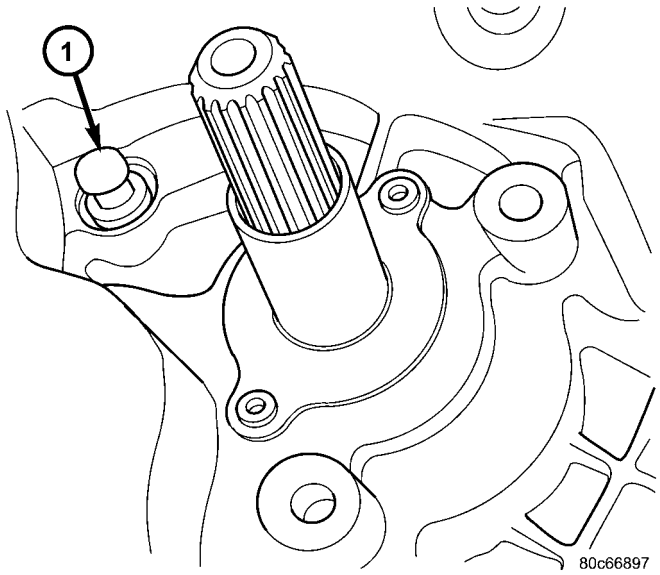

Fig. 22 Pivot Ball Position

1 - PIVOT BALL (1)

(4) Install clutch release bearing/lever assembly into position by sliding bearing onto input bearing retainer, and using moderate hand pressure to seat release lever to pivot ball (Fig. 24). A “pop” sound should be heard. Verify proper engagement by lightly pulling outward on lever at pivot ball location, and then actuating lever and bearing to ensure proper operation.

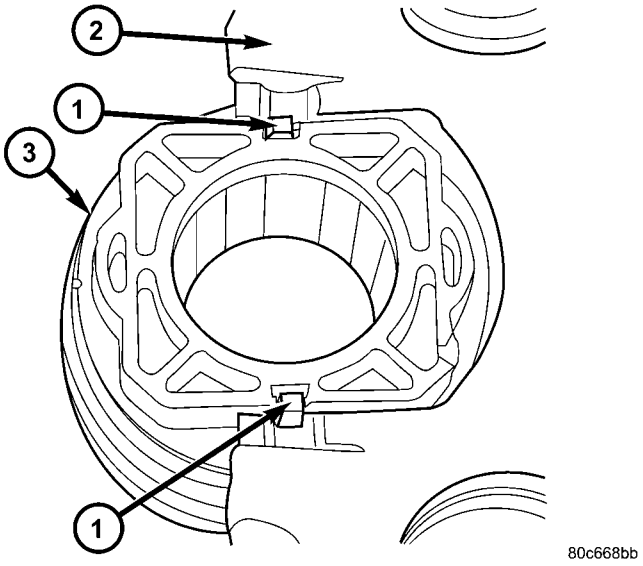

Fig. 23 Release Bearing-to-Lever

1 - RETAINER (2)
2 - RELEASE LEVER
3 - RELEASE BEARING

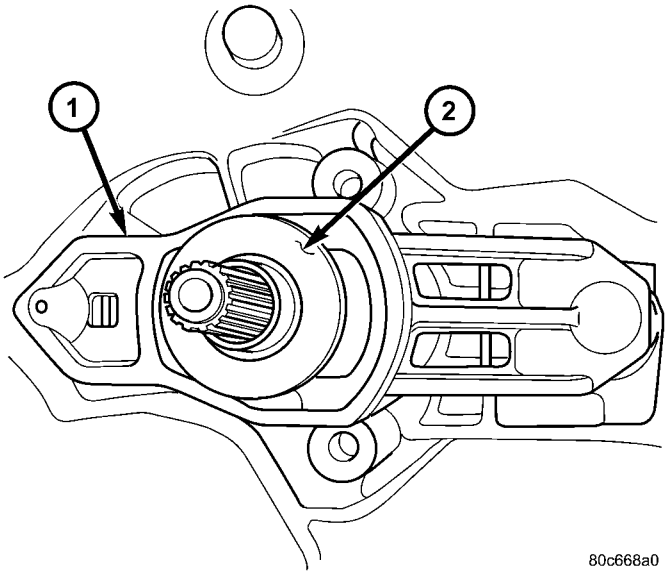

Fig. 24 Release Bearing and Lever

1 - RELEASE LEVER
2 - RELEASE BEARING

(5) Reinstall transaxle assembly (Refer to 21 - TRANSMISSION/TRANSAXLE/T 850 MANUAL - INSTALLATION)

CLUTCH RELEASE CABLE (2.0L/T350 MODELS)

DESCRIPTION

2.0L equipped models use a cable style clutch release system. The clutch cable assembly (Fig. 25) carries the movement of the clutch pedal to the clutch release bearing. The cable is designed to maintain tension against the clutch fork, or lever, and has a built in self-adjusting mechanism, which compensates for clutch disc wear.

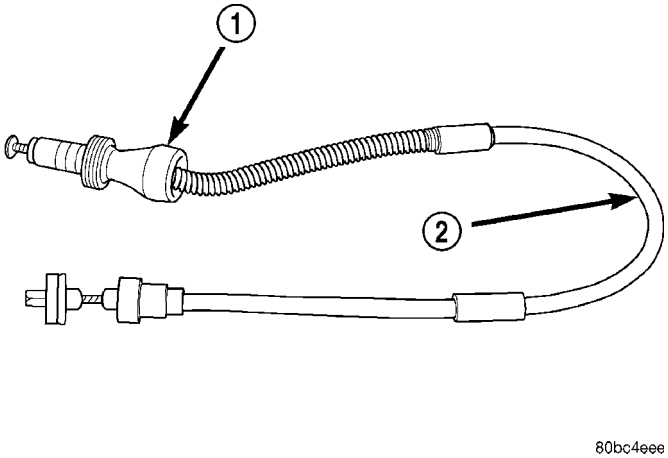

Fig. 25 Clutch Cable Assembly

1 - ADJUSTER MECHANISM
2 - CLUTCH CABLE

REMOVAL

(1) Disconnect battery negative cable.
(2) Remove air cleaner assembly.
(3) Remove bellhousing cap (Fig. 26).
(4) Disconnect clutch cable from release lever (Fig. 26).
(5) Remove steering column lower shroud.
(6) Remove knee bolster.
(7) Remove upstop spacer retainer clip from pedal pin.

NOTE: Depressing the clutch pedal provides access to the clutch cable strand. Disconnect the cable upstop/spacer from the pedal pivot pin by removing the retaining clip at the top of the clutch pedal. Wedge a flat–blade pry tool between the pin and the retaining tab. While holding the tab slightly separated from the pin, pull the upstop/spacer off the pedal. Now remove the cable end from the upstop/spacer.

(8) Remove clutch release cable core from upstop spacer (Fig. 27).
(9) Loosen but do not remove four (4) brake booster-to-dash panel nuts.

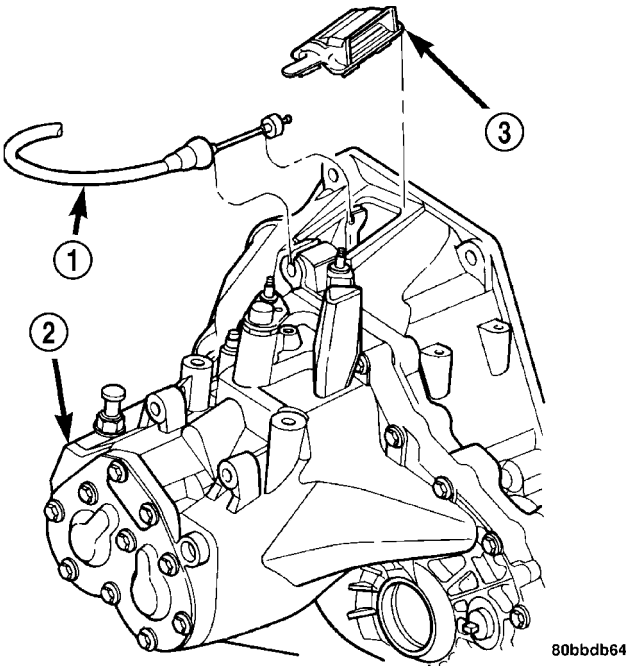

Fig. 26 Clutch Cable at Transaxle

1 - CLUTCH CABLE
2 - TRANSAXLE
3 - BELLHOUSING CAP

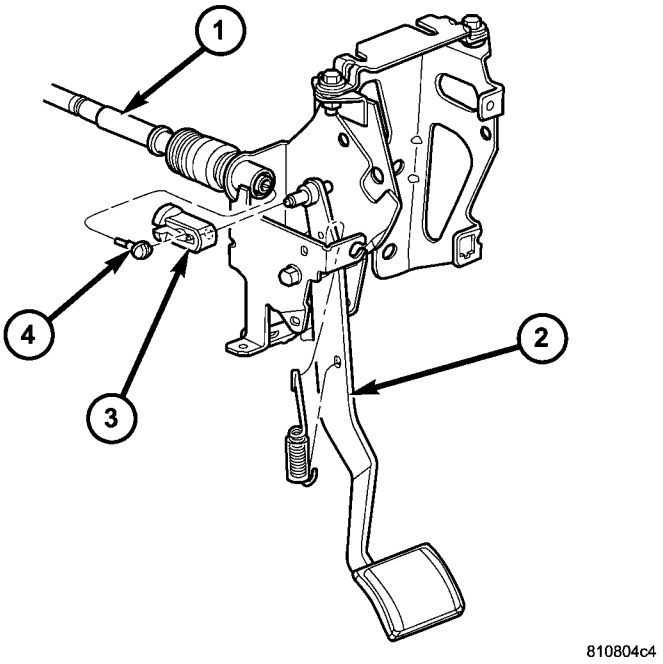

Fig. 27 Clutch Cable at Pedal Assembly

1 - CABLE ASSEMBLY
2 - CLUTCH PEDAL
3 - SPACER
4 - CABLE CORE

(10) Remove clutch release cable through engine compartment.

CLUTCH RELEASE CABLE (2.0L/T350 MODELS) (Continued)

INSTALLATION

(1) Feed clutch release cable through dash panel hole and into passenger compartment.

(2) Connect clutch release cable core to upstop spacer.

(3) Connect upstop spacer to clutch pedal pin and secure with retainer clip.

(4) Route clutch release cable through engine compartment as removed, and connect clutch release cable to clutch release lever (Fig. 26).

(5) Verify adjuster mechanism operation: With slight pressure, pull the clutch release lever end of the cable to draw the cable taut. Push the clutch cable housing toward the dash panel (With less than 25 lbs. of effort, the cable housing should move 30-50mm.). This indicates proper adjuster mechanism function. If the cable does not adjust, determine if the mechanism is properly seated on the bracket.

(6) Install bellhousing cap (Fig. 26).

(7) Torque brake booster nuts.

(8) Install knee bolster.

(9) Install steering column lower shroud.

(10) Install air cleaner assembly.

(11) Connect battery negative cable.

CLUTCH SLAVE CYLINDER (2.7L/T850 MODELS)

DESCRIPTION

2.7L equipped models that utilize the T850 transaxle use a clutch slave cylinder to operate the release lever and bearing. The clutch slave cylinder fastens to the transaxle bellhousing (Fig. 28), and consists of a hydraulic piston and cylinder, seal, return spring, and integrated hydraulic quick connect fitting for ease of service.

OPERATION

When the clutch pedal is depressed, fluid pressurized by the clutch master cylinder pushes the slave cylinder piston, extending the push rod and operating the clutch release lever and bearing.

REMOVAL

(1) Raise vehicle on hoist.

(2) Using Tool 6638A, disconnect hyrdraulic clutch circuit quick connect fitting.

(3) Remove clutch slave cylinder (Fig. 29) by lifting nylon tab with a small screwdriver, and then depressing cylinder inward towards case and rotating cylinder 60° counter-clockwise.

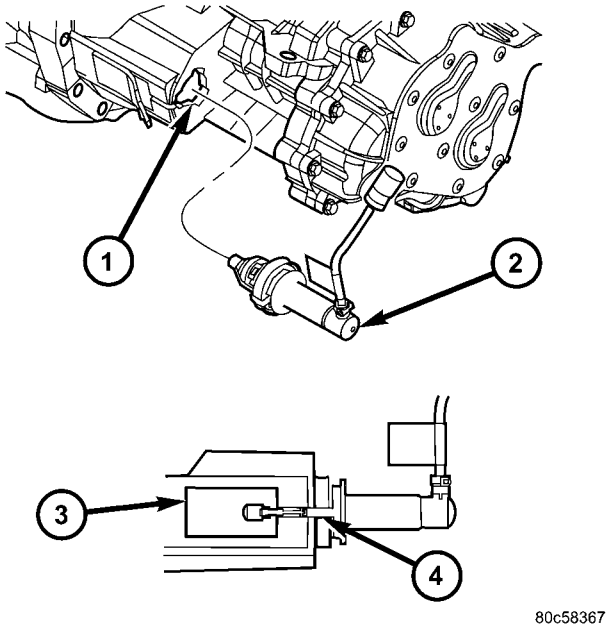

Fig. 28 Slave Cylinder Location

1 - MOUNTING HOLE
2 - SLAVE CYLINDER
3 - ACCESS HOLE
4 - NYLON ANTI-ROTATION TAB

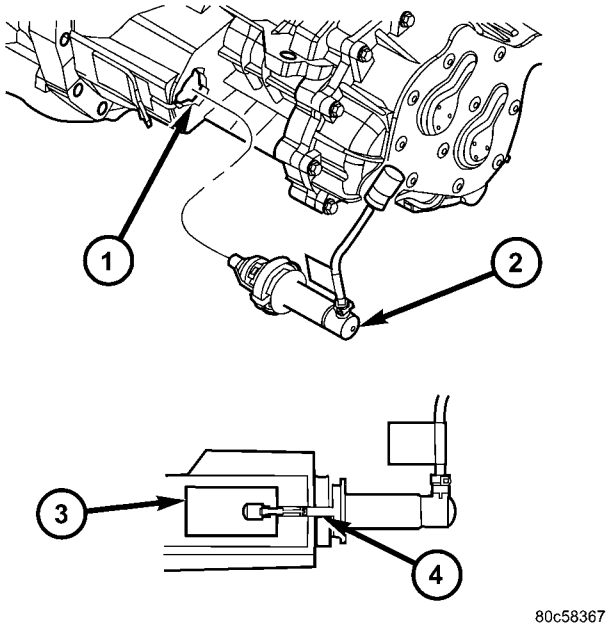

Fig. 29 Slave Cylinder Removal/Installation

1 - MOUNTING HOLE
2 - SLAVE CYLINDER
3 - ACCESS HOLE
4 - NYLON ANTI-ROTATION TAB

CLUTCH SLAVE CYLINDER (2.7L/T850 MODELS) (Continued)

INSTALLATION

(1) Install clutch slave cylinder into position, noting orientation of different sized lugs. While depressing inward, rotate slave cylinder clockwise until nylon locating tab rests in transaxle case cutout, and the hydraulic tube is vertical (Fig. 29).

(2) Connect “quick-connect” connection until an audible “click” is heard. Verify connection by pulling outward on connection.

(3) Lower vehicle.

MODULAR CLUTCH

DESCRIPTION

Manual transaxle equipped vehicles utilize a modular clutch assembly (Fig. 30). The transaxle must be removed to gain access to and replace the modular clutch, drive plate, and/or clutch release bearing and lever.

The modular clutch assembly used in this vehicle consists of a single, dry-type clutch disc, a diaphragm style clutch cover, and an integrated flywheel. The clutch cover is riveted to the flywheel, containing the clutch disc within. The modular clutch can only be serviced as an assembly.

The clutch disc has cushion springs riveted to the disc hub assembly. The clutch disc facings are riveted to the cushion springs. The facings are made from a non-asbestos material.

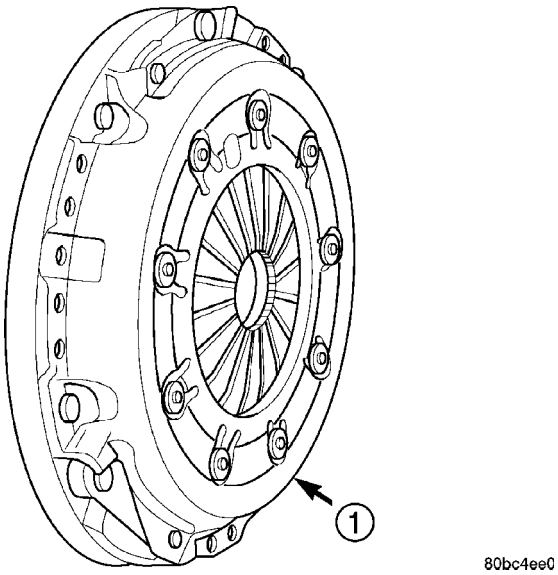

Fig. 30 Modular Clutch Assembly

1 - MODULAR CLUTCH ASSEMBLY

The clutch cover pressure plate assembly is a diaphragm type unit with a one-piece diaphragm spring with multiple release fingers. The pressure plate release fingers are preset during manufacture and are not adjustable.

MODULAR CLUTCH (Continued)

REMOVAL

(1) Remove transaxle and modular clutch assembly from engine. (Refer to 21 - TRANSMISSION/TRANSAXLE/MANUAL - REMOVAL)

(2) Remove the modular clutch assembly fom the transaxle input shaft (Fig. 31).

INSTALLATION

(1) Install modular clutch assembly onto input shaft (Fig. 31).

(2) Install transaxle to vehicle. (Refer to 21 - TRANSMISSION/TRANSAXLE/MANUAL - INSTALLATION)

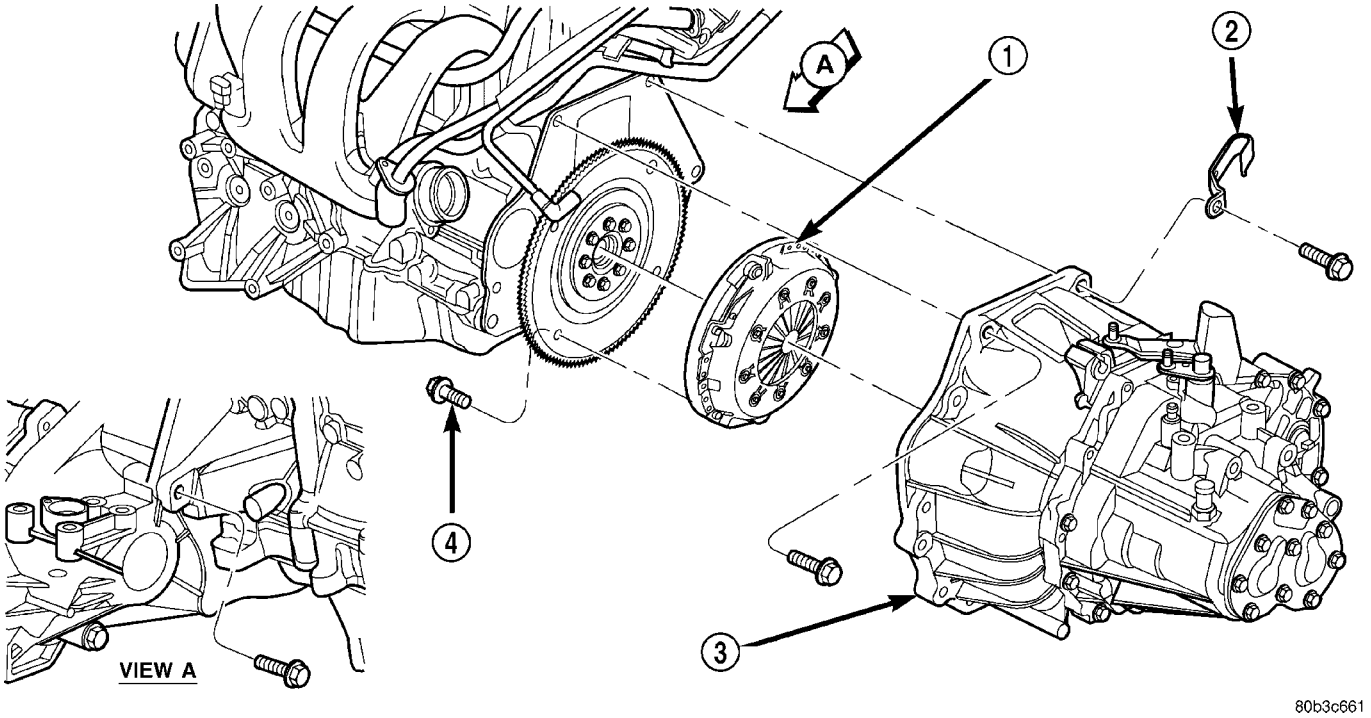

Fig. 31 Modular Clutch Removal/Installation (2.0L/T350 Shown - 2.7L/T850 Similar)

1 - MODULAR CLUTCH ASSEMBLY
2 - CLIP
3 - TRANSAXLE
4 - CLUTCH MODULE BOLT (4)

COOLING

TABLE OF CONTENTS

page

COOLING
SPECIFICATIONS
ACCESSORY DRIVE BELT TENSION 1
TORQUE 2
SPECIAL TOOLS
COOLING SYSTEM 3

page

ACCESSORY DRIVE 4
ENGINE 10
TRANSMISSION 46

COOLING

SPECIFICATIONS

ACCESSORY DRIVE BELT TENSION

2.0L/2.4L

Accessory Drive Belt	Belt Tension		
Air Conditioning Compressor/ Generator	Dynamic Tensioned		
Power Steering Pump	New	120 - 180 lbs.	160 - 223 Hz
	Used*	70 - 115 lbs.	114 - 179 Hz
*A belt is considered used after 15 minutes of run-in time.			

2.7L

Accessory Drive Belt	Belt Tension		
Air Conditioning Compressor/ Generator	New	185 - 235 lbs.	204 - 230 Hz
	Used*	110 - 160 lbs.	157 - 190 Hz
Power Steering Pump	New	120 - 180 lbs.	122 - 170 Hz
	Used*	70 - 115 lbs.	94 - 136 Hz
*A belt is considered used after 15 minutes of run-in time.			

COOLING (Continued)

TORQUE

DESCRIPTION	N·m	Ft. Lbs.	In. Lbs.
Accessory Drive Belt Tensioner Bracket (2.0L)—Fasteners	30	—	265
Accessory Drive Belt Tensioner Assembly(2.4L)—Fastener	54	40	—
Accessory Drive Belt Tensioner Bracket (2.7L)—Fasteners	28	—	250
A/C Condenser to Radiator—Fasteners	5	—	45
Coolant Outlet Connector —Bolts	12	—	105
Cooling System Bleed Valve	12	—	105
Fan Module to Radiator—Fasteners	5	—	45
Fan Motor to Shroud—Fasteners	5	—	45
Thermostat Housing to cylinder head - 2.0L/2.4L—Bolts	28	—	250
Thermostat Housing 2.7L—Bolts	12	—	105
Transmission Cooler Tube Bracket—Fastener	5	—	45
Transmission Cooler Tube—Fastener	9	—	80
Transmission Cooler—Hose Clamps	3.2	—	28
Water Pump Mounting 2.0L/2.4L/2.7L—Bolts	12	—	105
Water Pump Inlet Tube to Block 2.0L/2.4L—Bolts	12	—	105

COOLING (Continued)

SPECIAL TOOLS

COOLING SYSTEM

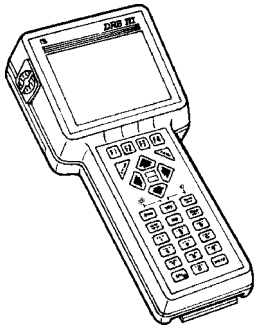

DRB III® with PEP Module – OT-CH6010A

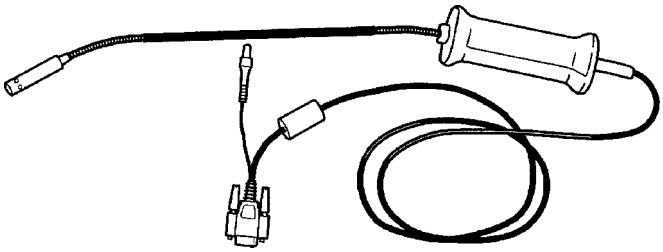

Belt Tension Gauge Adapter – 8371

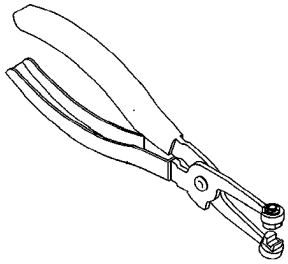

Hose Clamp Pliers 8495

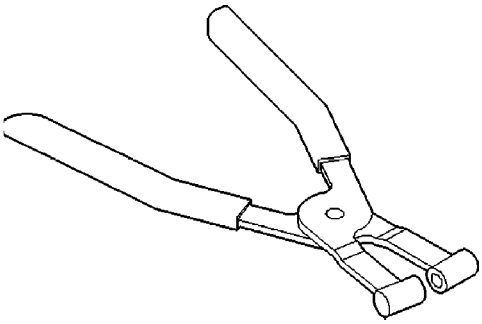

Hose Clamp Pliers 6094

Filling Aid Funnel 8195

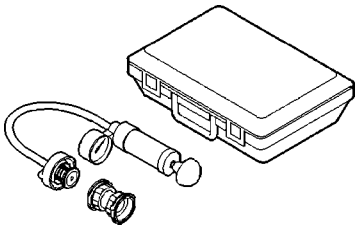

Cooling System Tester 7700

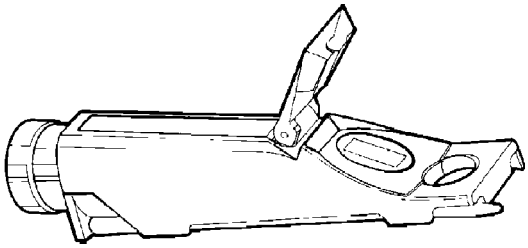

Coolant Refractometer 8286

ACCESSORY DRIVE

TABLE OF CONTENTS

	page
DRIVE BELTS	
DESCRIPTION	4
DIAGNOSIS AND TESTING - ACCESSORY DRIVE BELTS	5
STANDARD PROCEDURE - CHECKING ACCESSORY DRIVE BELT TENSION - 2.7L	5
REMOVAL	
REMOVAL - 2.0L/2.4L	6
REMOVAL - 2.7L	6
CLEANING	7
INSPECTION	7
INSTALLATION	
INSTALLATION - 2.0L/2.4L	7
INSTALLATION - 2.7L	8
ADJUSTMENTS	
ADJUSTMENT - 2.7L ACCESSORY DRIVE BELTS	8

DRIVE BELTS

DESCRIPTION

The accessory drive consists of two Poly-V type belts (Fig. 1) or (Fig. 2). One belt drives the power steering pump, the other drives the generator and air conditioning compressor. Both belts on the 2.7L engine are manually tensioned. The power steering belt on the 2.0L/2.4L engine is manually tensioned. The air conditioning/generator belt on the 2.0L/2.4L engine has an automatic belt tensioner.

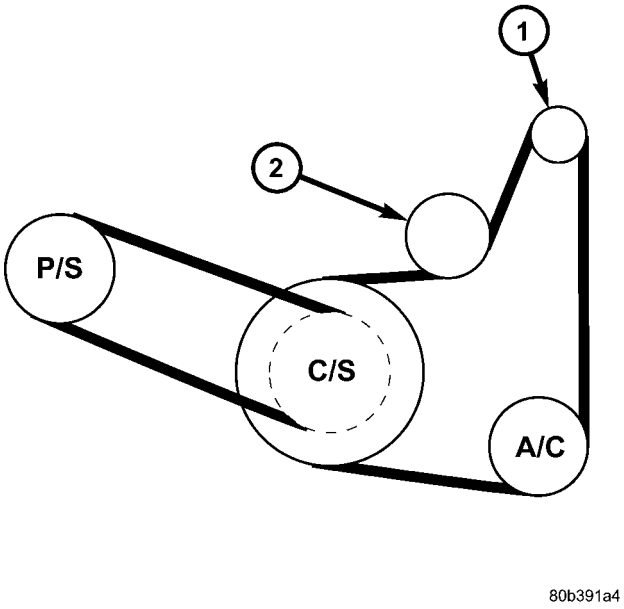

Fig. 1 Accessory Drive Belt System - 2.0L/2.4L

1 - GENERATOR
2 - IDLER/TENSIONER

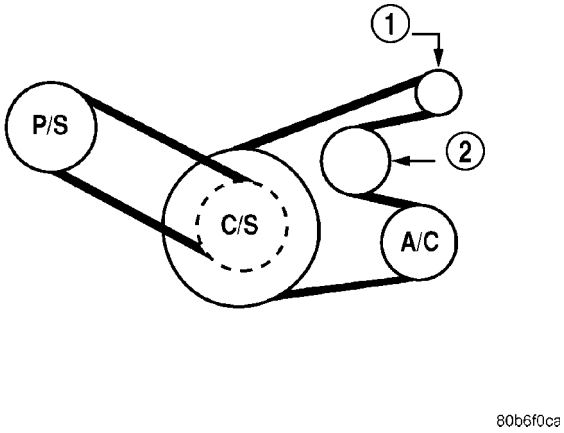

Fig. 2 Accessory Drive Belt System - 2.7L

1 - GENERATOR
2 - IDLER/TENSIONER

DRIVE BELTS (Continued)

DIAGNOSIS AND TESTING - ACCESSORY DRIVE BELTS

Satisfactory performance of the belt driven accessories depends on belt condition and proper belt tension.

ACCESSORY DRIVE BELT DIAGNOSIS

CONDITION	POSSIBLE CAUSE	CORRECTION
INSUFFICIENT ACCESSORY OUTPUT DUE TO BELT SLIPPAGE	1. Belt too loose.	1. Adjust belt tension.
	2. Belt excessively glazed or worn.	2. Replace and tighten as specified.
BELT SQUEAL WHEN ACCELERATING ENGINE	1. Belts too loose.	1. Adjust belt tension.
	2. Belts glazed.	2. Replace belts.
BELT CHIRP AT IDLE	1. Belts too loose.	1. Adjust belt tension.
	2. Foreign material imbedded in belt.	2. Replace belt.
	3. Non-uniform belt.	3. Replace belt.
	4. Misaligned pulley(s).	4. Align accessories.
	5. Non-uniform groove or eccentric pulley.	5. Replace pulley(s).
BELT ROLLED OVER IN GROOVE OR BELT JUMPS OFF	1. Broken cord in belt.	1. Replace belt.
	2. Belt too loose, or too tight.	2. Adjust belt tension.
	3. Misaligned pulleys.	3. Align accessories.
	4. Non-uniform grooves or eccentric pulley.	4. Replace pulley(s).

STANDARD PROCEDURE - CHECKING ACCESSORY DRIVE BELT TENSION - 2.7L

WARNING: DO NOT CHECK BELT TENSION WITH ENGINE RUNNING.

Accessory drive belt tension can be measured with Special Tool 8371 – Belt Tension Gauge Adapter, and the DRBIII® using the following procedures:

(1) Connect 8371 to the DRBIII® following the instructions provided with tool.

(2) Place end of microphone probe approximately 2.54 cm (1 in.) from belt at one of the belt center span locations shown in (Fig. 3).

(3) Pluck the belt a minimum of 3 times. (Use your finger or other suitable tool) The frequency of the belt in hertz (Hz) will display on DRBIII® screen.

(4) Adjust belt to obtain proper frequency (tension). Refer to ACCESSORY DRIVE BELT TENSION CHART for belt tension specifications.

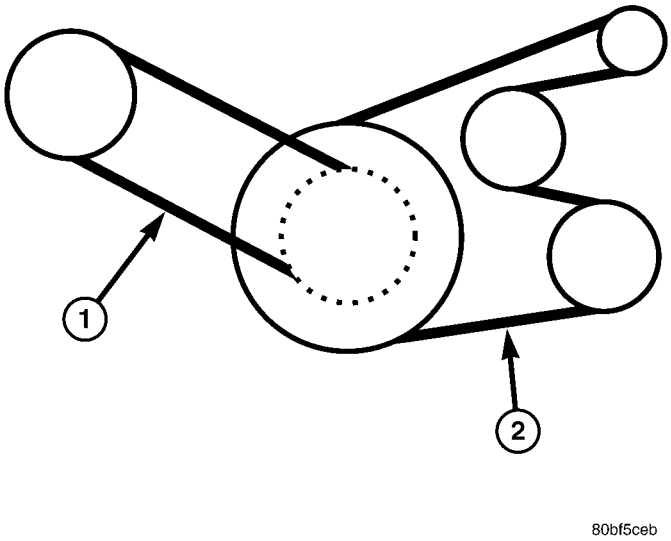

Fig. 3 Belt Center Span Locations - 2.7L

1 - POWER STEERING BELT CENTER SPAN
2 - AC/GENERATOR BELT CENTER SPAN

DRIVE BELTS (Continued)

2.7L ACCESSORY DRIVE BELT TENSION CHART

Accessory Drive Belt	Belt Tension		
Air Conditioning Compressor/ Generator	New	185 - 235 lbs.	204 - 230 Hz
	Used*	110 - 160 lbs	157 - 190 Hz
Power Steering Pump	New	120 - 180 lbs.	122 - 170 Hz
	Used*	70 - 115 lbs.	94 - 136 Hz
*A belt is considered used after 15 minutes of run-in time.			

REMOVAL

REMOVAL - 2.0L/2.4L

AIR CONDITIONING COMPRESSOR/GENERATOR BELT

(1) Raise vehicle on hoist.
(2) Remove right front wheel and belt splash shield.
(3) Insert a 3/8” drive breaker bar into the square opening of the belt tensioner pivot bracket.

CAUTION: Avoid excessive force to over compress belt tensioner. This may result in damage to the belt tensioner.

(4) Gently apply a force to rotate belt tensioner clockwise until the belt tensioner bottoms out and the belt can be removed from pulleys (Fig. 4) or (Fig. 5).
(5) Remove belt.
(6) Gently release tensioner.

POWER STEERING PUMP BELT

(1) Raise vehicle on hoist.
(2) Remove right front wheel and belt splash shield.
(3) Remove air conditioning compressor/generator belt.
(4) Loosen pivot bolt and locking bolt/nut.
(5) Release tension on belt by moving pump assembly inward towards engine.
(6) Remove belt.

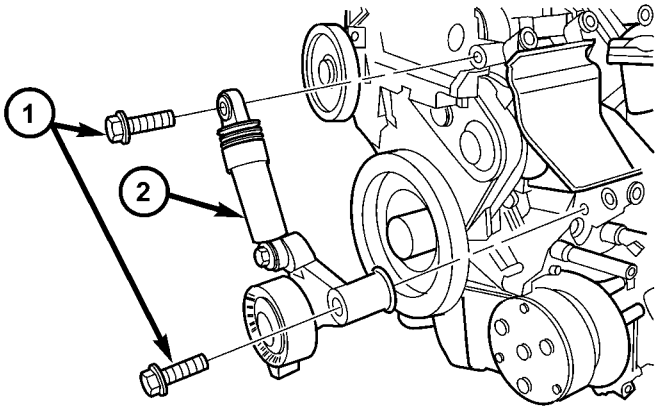

Fig. 4 Accessory Drive Belt Tensioner - 2.0L

1 - ATTACHING BOLTS
2 - HYDRAULIC TENSIONER

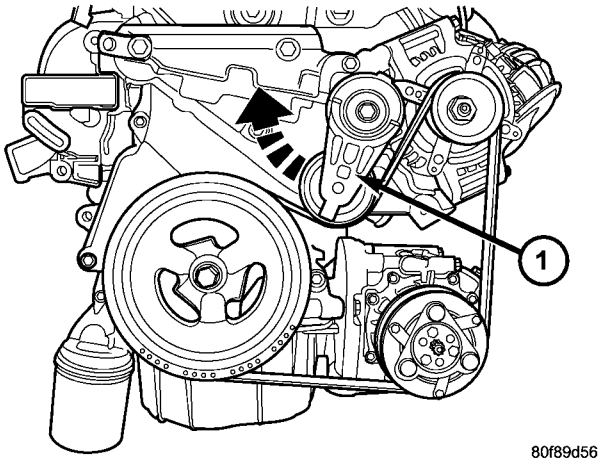

Fig. 5 Accessory Drive Belt Tensioner - 2.4L

1 - INSERT 3/8″ DRIVE TOOL TO ROTATE TENSIONER

REMOVAL - 2.7L

AIR CONDITIONING COMPRESSOR/GENERATOR BELT

(1) Raise vehicle on hoist.
(2) Remove right front wheel and belt splash shield.
(3) Loosen tensioner locking bolt and pivot bolt.
(4) Rotate tensioner clockwise to allow enough slack to remove belt.

DRIVE BELTS (Continued)

POWER STEERING PUMP BELT

(1) Raise vehicle on hoist.

(2) Remove right front wheel and belt splash shield.

(3) Remove the air conditioning compressor/generator belt.

(4) Loosen belt adjusting bolt. It is not necessary to loosen the pivot bolt on the power steering pump. There is a bushing incorporated into the power steering pump/bracket that allows it to pivot.

(5) Remove power steering belt.

CLEANING

Clean all foreign debris from belt pulley grooves. The belt pulleys must be free of oil, grease, and coolants before installing the drive belt.

INSPECTION

Belt replacement under any or all of the following conditions is required:

- Excessive wear
- Frayed cords
- Severe glazing

Poly-V Belt system may develop minor cracks across the ribbed side (due to reverse bending). These minor cracks are considered normal and acceptable. Parallel cracks are not (Fig. 6).

NOTE: Do not use any type of belt dressing or restorer on Poly-V Belts.

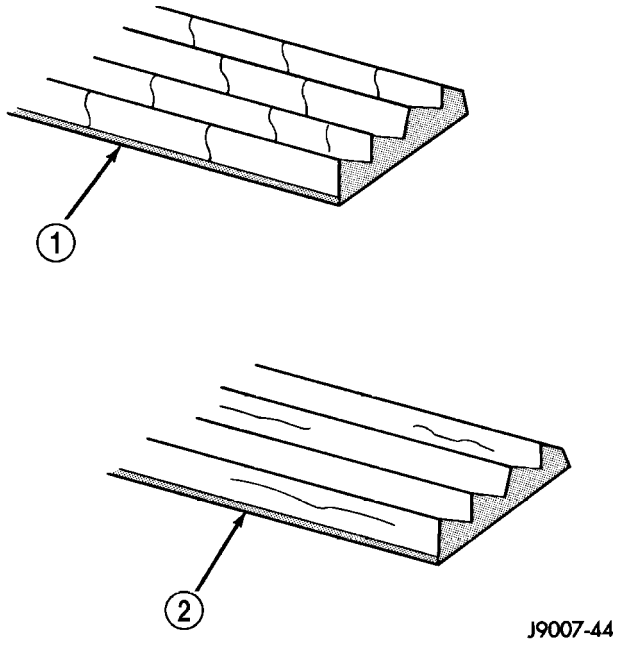

Fig. 6 Drive Belt Wear Pattern

1 - NORMAL CRACKS - BELT OK
2 - NOT NORMAL CRACKS - REPLACE BELT

INSTALLATION

INSTALLATION - 2.0L/2.4L

NOTE: When installing drive belt onto pulleys, make sure that belt is properly routed and all V-grooves make proper contact with pulley.

AIR CONDITIONING COMPRESSOR/GENERATOR BELT

(1) Install belt over all pulleys except for the air conditioning compressor pulley (Fig. 7).

(2) Insert a 3/8” drive breaker bar into the square opening of the belt tensioner pivot bracket.

CAUTION: Avoid excessive force to over compress belt tensioner. This may result in damage to the belt tensioner.

(3) Gently apply a force to rotate belt tensioner clockwise until the belt tensioner bottoms out and the belt can be installed onto air conditioning compressor pulley (Fig. 4) or (Fig. 5).

(4) Install belt over air conditioning compressor pulley.

(5) Release spring tension onto belt.

(6) Remove breaker bar from belt tensioner pivot bracket.

(7) Install belt splash shield and right front wheel.

(8) Lower vehicle.

DRIVE BELTS (Continued)

POWER STEERING PUMP BELT

(1) Install power steering pump belt on pulleys (Fig. 7).
(2) Insert a 1/2” drive breaker bar into the square opening on the power steering pump bracket.
(3) Hold clockwise pressure on power steering pump bracket and tighten adjusting bolt/nut.
(4) Tighten pivot bolt.
(5) Install air conditioning compressor/generator belt.
(6) Install belt splash shield and right front wheel.
(7) Lower vehicle.

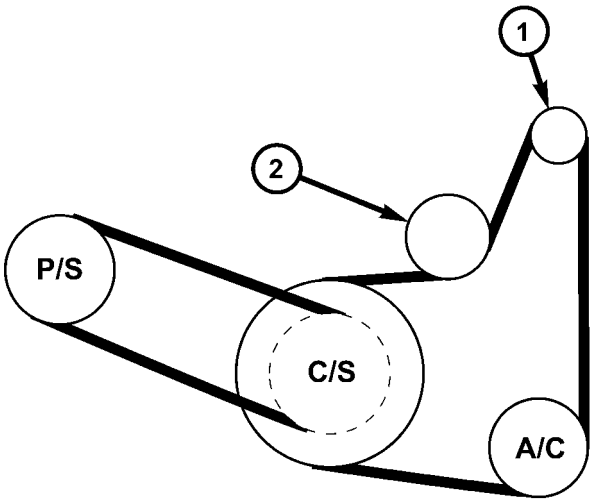

80b391a4

Fig. 7 Accessory Drive Belt System - 2.0L/2.4L

1 - GENERATOR
2 - IDLER/TENSIONER

INSTALLATION - 2.7L

NOTE: When installing drive belt onto pulleys, make sure that belt is properly routed and all V-grooves make proper contact with pulley.

AIR CONDITIONING COMPRESSOR/GENERATOR BELT

(1) Install air conditioning compressor/generator belt on pulleys, tensioner in slack position, slip belt over idler last (Fig. 8).
(2) (Refer to 7 - COOLING/ACCESSORY DRIVE/ DRIVE BELTS - ADJUSTMENTS) for proper drive belt tension adjustment.
(3) Install belt splash shield and right front wheel.
(4) Lower vehicle.

POWER STEERING PUMP BELT

(1) Install power steering belt on pulleys (Fig. 8).

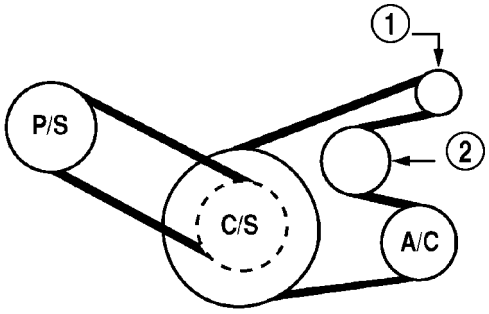

80b6f0ca

Fig. 8 Accessory Drive Belt System - 2.7L

1 - GENERATOR
2 - IDLER/TENSIONER

(2) (Refer to 7 - COOLING/ACCESSORY DRIVE/ DRIVE BELTS - ADJUSTMENTS) for proper drive belt tension adjustment.
(3) Install air conditioning compressor/generator belt.
(4) Install belt splash shield and right front wheel.
(5) Lower vehicle.

ADJUSTMENTS

ADJUSTMENT - 2.7L ACCESSORY DRIVE BELTS

NOTE: A belt is considered “used” after 15 minutes of run time.

AIR CONDITIONING COMPRESSOR/GENERATOR BELT TENSIONING

WARNING: DO NOT EXERT MORE THAN 190 N·m (140 ft. lbs.) OF FORCE ON AIR CONDITIONING COMPRESSOR/GENERATOR BELT TENSIONER BRACKET DURING TENSIONING PROCEDURE.

NOTE: Ensure lower tensioner bracket bolt is finger tight/seated to prevent bending.

NEW BELT

(1) Engage a torque wrench, with a maximum 2 inch extension in the 1/2 inch square opening of the tensioner bracket (Fig. 9).
(2) Apply 141 N·m (104 ft. lbs.) of torque, counter-clockwise to the tensioner bracket while tightening the upper fastener. Torque fastener to 28 N·m (250 in. lbs.) (Fig. 9).

DRIVE BELTS (Continued)

(3) Remove torque wrench from tensioner bracket, and torque lower tensioner bracket fastener to 28 N·m (250 in. lbs.).

(4) Verify proper belt tension (Refer to 7 - COOLING/ACCESSORY DRIVE/DRIVE BELTS - STANDARD PROCEDURE - CHECKING ACCESSORY DRIVE BELT TENSION - 2.7L).

USED BELT

(1) Engage a torque wrench, with a maximum 2 inch extension in the 1/2 inch square opening of the tensioner bracket (Fig. 9).

(2) Apply 96 N·m (71 ft. lbs.) of torque, counterclockwise to the tensioner bracket while tightening the upper fastener. Torque fastener to 28 N·m (250 in. lbs.) (Fig. 9).

(3) Remove torque wrench from tensioner bracket, and torque lower tensioner bracket fastener to 28 N·m (250 in. lbs.).

(4) Verify proper belt tension (Refer to 7 - COOLING/ACCESSORY DRIVE/DRIVE BELTS - STANDARD PROCEDURE - CHECKING ACCESSORY DRIVE BELT TENSION - 2.7L).

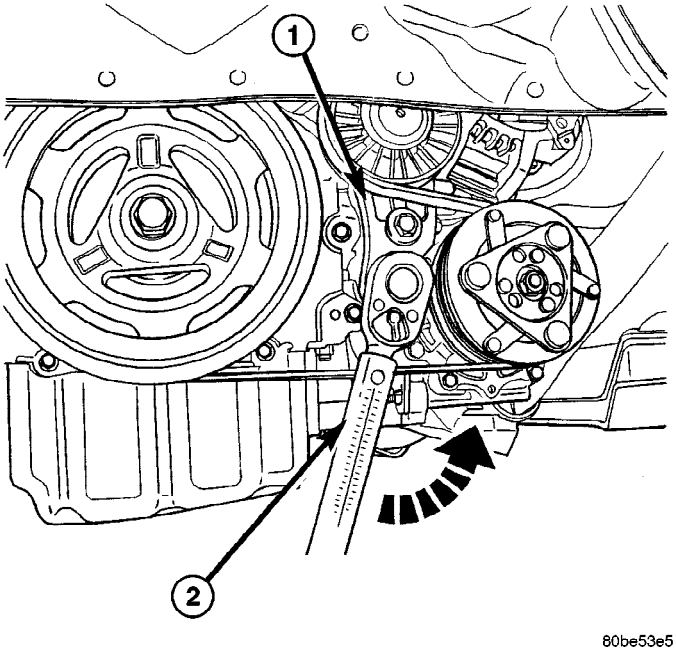

Fig. 9 Air Conditioning Compressor/Generator Belt Adjustment - 2.7L

1 - TENSIONER BRACKET
2 - TORQUE WRENCH WITH TWO INCH EXTENSION

POWER STEERING PUMP BELT TENSIONING

(1) Insert a 1/2” drive breaker bar into the square opening on the power steering pump bracket.

(2) Hold clockwise pressure on power steering pump bracket and tighten adjusting bolt.

(3) Verify proper belt tension (Refer to 7 - COOLING/ACCESSORY DRIVE/DRIVE BELTS - STANDARD PROCEDURE - CHECKING ACCESSORY DRIVE BELT TENSION - 2.7L).

ENGINE

TABLE OF CONTENTS

page

ENGINE
DESCRIPTION - COOLING SYSTEM 11
OPERATION 11
DIAGNOSIS AND TESTING
DIAGNOSIS AND TESTING - COOLING SYSTEM DIAGNOSIS 15
DIAGNOSIS AND TESTING - COOLING SYSTEM FLOW CHECK 21
DIAGNOSIS AND TESTING - COOLING SYSTEM LEAK TESTING 22
DIAGNOSIS AND TESTING - COOLING SYSTEM AERATION 22
DIAGNOSIS AND TESTING - COOLING SYSTEM DEAERATION 23
STANDARD PROCEDURE
COOLANT LEVEL CHECK - ROUTINE 23
COOLING SYSTEM - DRAINING 24
COOLING SYSTEM - FILLING 24
CLEANING 25
INSPECTION 26
COOLANT
DESCRIPTION - ENGINE COOLANT 26
DIAGNOSIS AND TESTING - COOLANT CONCENTRATION TESTING 26
STANDARD PROCEDURE
COOLANT - ADDING ADDITIONAL 27
STANDARD PROCEDURE - COOLANT SERVICE 27
COOLANT OUTLET CONNECTOR
REMOVAL 27
INSTALLATION 28
COOLANT RECOVERY CONTAINER - 2.0L/2.4L
DESCRIPTION 28
OPERATION 28
REMOVAL 28
INSTALLATION 29
COOLANT PRESSURE CONTAINER - 2.7L
DESCRIPTION 29
OPERATION 29
REMOVAL 29
INSTALLATION 29
ENGINE BLOCK HEATER
DESCRIPTION
DESCRIPTION - 2.0L/2.4L 30
DESCRIPTION - 2.7L 30
OPERATION
OPERATION - 2.0L/2.4L 30
OPERATION - 2.7L 30
DIAGNOSIS AND TESTING - ENGINE BLOCK HEATER TESTING 30
REMOVAL
REMOVAL - 2.0L/2.4L 30
REMOVAL - 2.7L 30
INSTALLATION
INSTALLATION - 2.0L/2.4L 31
INSTALLATION - 2.7L 31
ENGINE COOLANT TEMPERATURE SENSOR
DESCRIPTION 31
OPERATION 31
REMOVAL 31
INSTALLATION 32
ENGINE COOLANT THERMOSTAT
DESCRIPTION
DESCRIPTION - 2.0L/2.4L 32
DESCRIPTION - 2.7L 32
OPERATION 32
DIAGNOSIS AND TESTING - ENGINE COOLANT THERMOSTAT TESTING 32
REMOVAL
REMOVAL - 2.0L/2.4L 32
REMOVAL - 2.7L 32
INSTALLATION
INSTALLATION - 2.0L/2.4L 33
INSTALLATION - 2.7L 34
HOSE CLAMPS
DESCRIPTION - HOSE CLAMPS 34
OPERATION - HOSE CLAMPS 34
RADIATOR
REMOVAL 35
CLEANING 36
INSPECTION 36
INSTALLATION 36
RADIATOR DRAINCOCK
REMOVAL 36
INSTALLATION 36
PRESSURE CAP
DESCRIPTION 36
OPERATION 37
DIAGNOSIS AND TESTING
DIAGNOSIS AND TESTING - PRESSURE CAP TESTING 37
DIAGNOSIS AND TESTING - COOLING SYSTEM PRESSURE RELIEF TESTING 37
CLEANING 38
INSPECTION 38
RADIATOR FAN(S)
DESCRIPTION 39
OPERATION 39

DIAGNOSIS AND TESTING
DIAGNOSIS AND TESTING - RADIATOR FAN CONTROL 39
DIAGNOSIS AND TESTING - ELECTRIC FAN MOTOR TEST 40
REMOVAL 40
INSPECTION 40
INSTALLATION 41
THERMOSTAT HOUSING
REMOVAL
REMOVAL - 2.0L 41
REMOVAL - 2.4L 41
INSTALLATION
INSTALLATION - 2.0L 41
INSTALLATION - 2.4L 42
WATER PUMP
DESCRIPTION
DESCRIPTION - 2.0L/2.4L 42
DESCRIPTION - 2.7L 42
DIAGNOSIS AND TESTING - WATER PUMP . . . 42
REMOVAL
REMOVAL - 2.0L/2.4L 43
REMOVAL - 2.7L 43
CLEANING 43
INSPECTION
INSPECTION - 2.0L/2.4L 43
INSPECTION - 2.7L 43
INSTALLATION
INSTALLATION - 2.0L/2.4L 44
INSTALLATION - 2.7L 45
WATER PUMP INLET TUBE
REMOVAL
REMOVAL - 2.0L 45
REMOVAL - 2.4L 45
INSTALLATION
INSTALLATION - 2.0L 45
INSTALLATION - 2.4L 45

ENGINE

DESCRIPTION - COOLING SYSTEM

The cooling system consists of an engine cooling module, thermostat, coolant recovery/reserve system (2.0L/2.4L) or coolant pressure container (2.7L), coolant, hoses, and a water pump to circulate the coolant. The engine cooling module consists of a radiator, electric fans, shroud, transmission oil cooler, and air conditioning condenser (Fig. 1).

OPERATION

The primary purpose of a cooling system is to maintain engine temperature in a range that will provide satisfactory engine performance and emission levels under all expected driving conditions. It also provides hot water (coolant) for heater performance (Fig. 2) or (Fig. 3).

ENGINE (Continued)

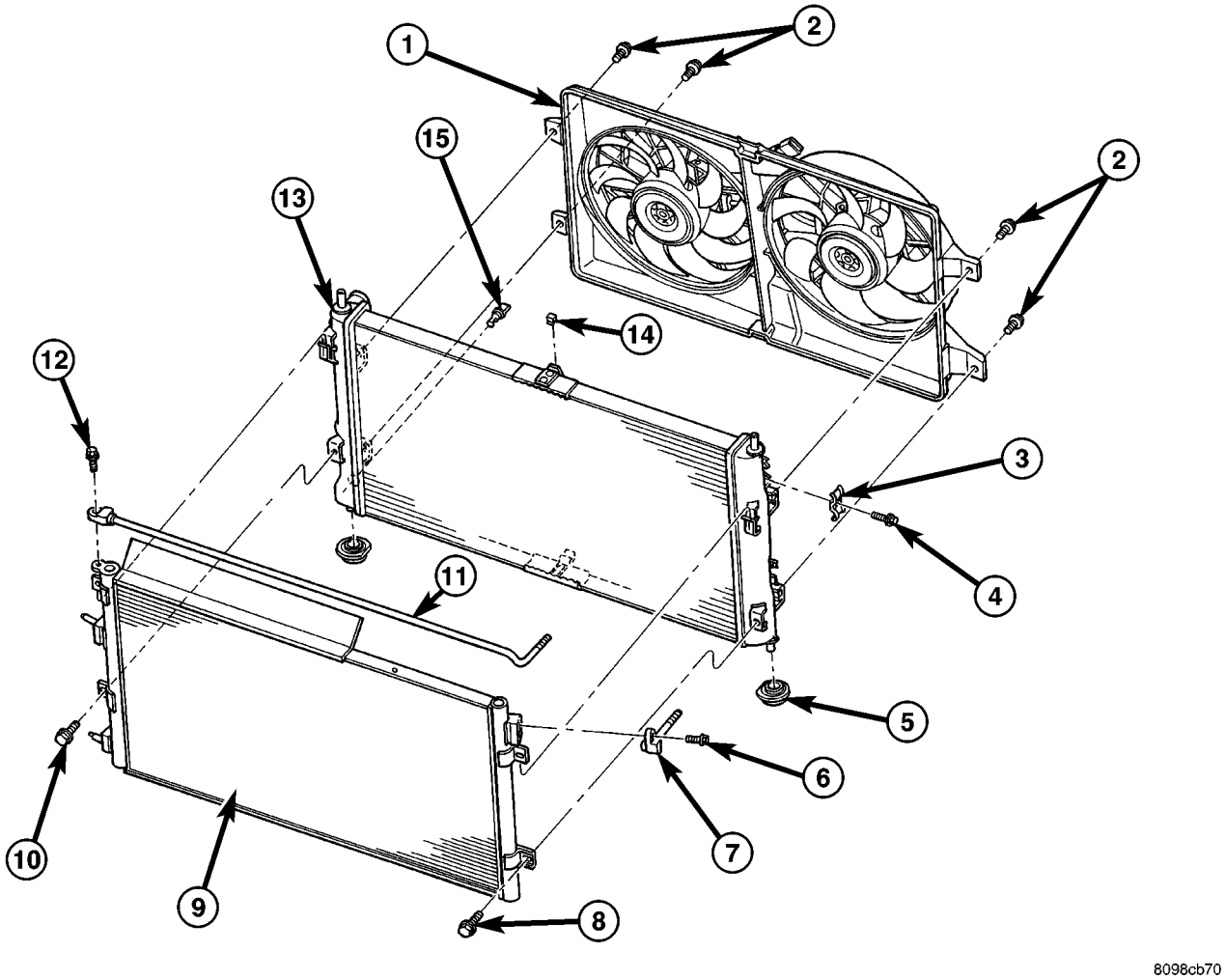

Fig. 1 COOLING MODULE

1 - RADIATOR FAN MODULE
2 - FAN MODULE TO RADIATOR FASTENERS
3 - TRANSMISSION COOLER TUBE BRACKET
4 - BRACKET FASTENER
5 - ISOLATOR
6 - TRANSMISSION COOLER TUBE FASTENER
7 - TRANSMISSION COOLER TUBE (INLET)
8 - CONDENSER TO RADIATOR FASTENER
9 - COMBINATION A/C CONDENSER AND TRANSMISSION OIL COOLER
10 - CONDENSER TO RADIATOR FASTENER
11 - TRANSMISSION COOLER TUBE (OUTLET)
12 - TRANSMISSION COOLER TUBE FASTENER
13 - RADIATOR
14 - CLIP
15 - RADIATOR DRAINCOCK

ENGINE (Continued)

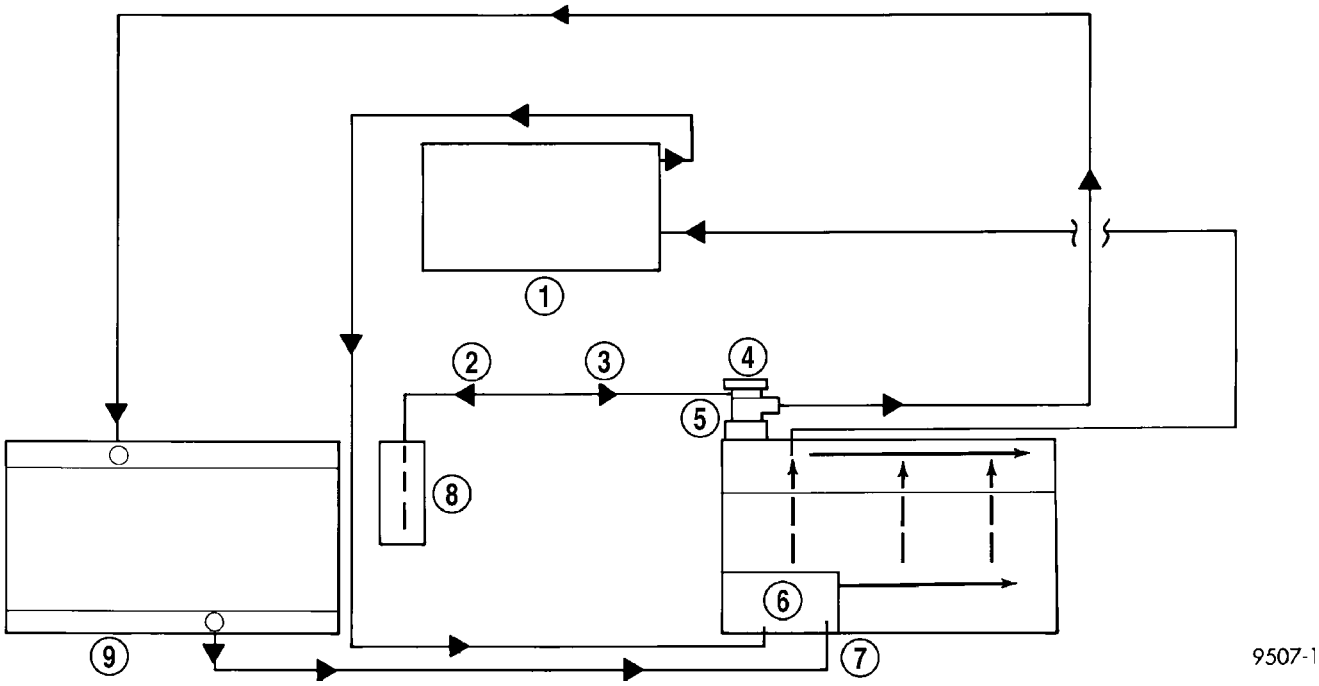

Fig. 2 Cooling System Operation - 2.0L/2.4L

1 - HEATER
2 - HEAT UP
3 - COOL DOWN
4 - PRESSURE CAP
5 - COOLANT OUTLET CONNECTOR
6 - WATER PUMP
7 - ENGINE
8 - COOLANT RECOVERY CONTAINER
9 - RADIATOR

ENGINE (Continued)

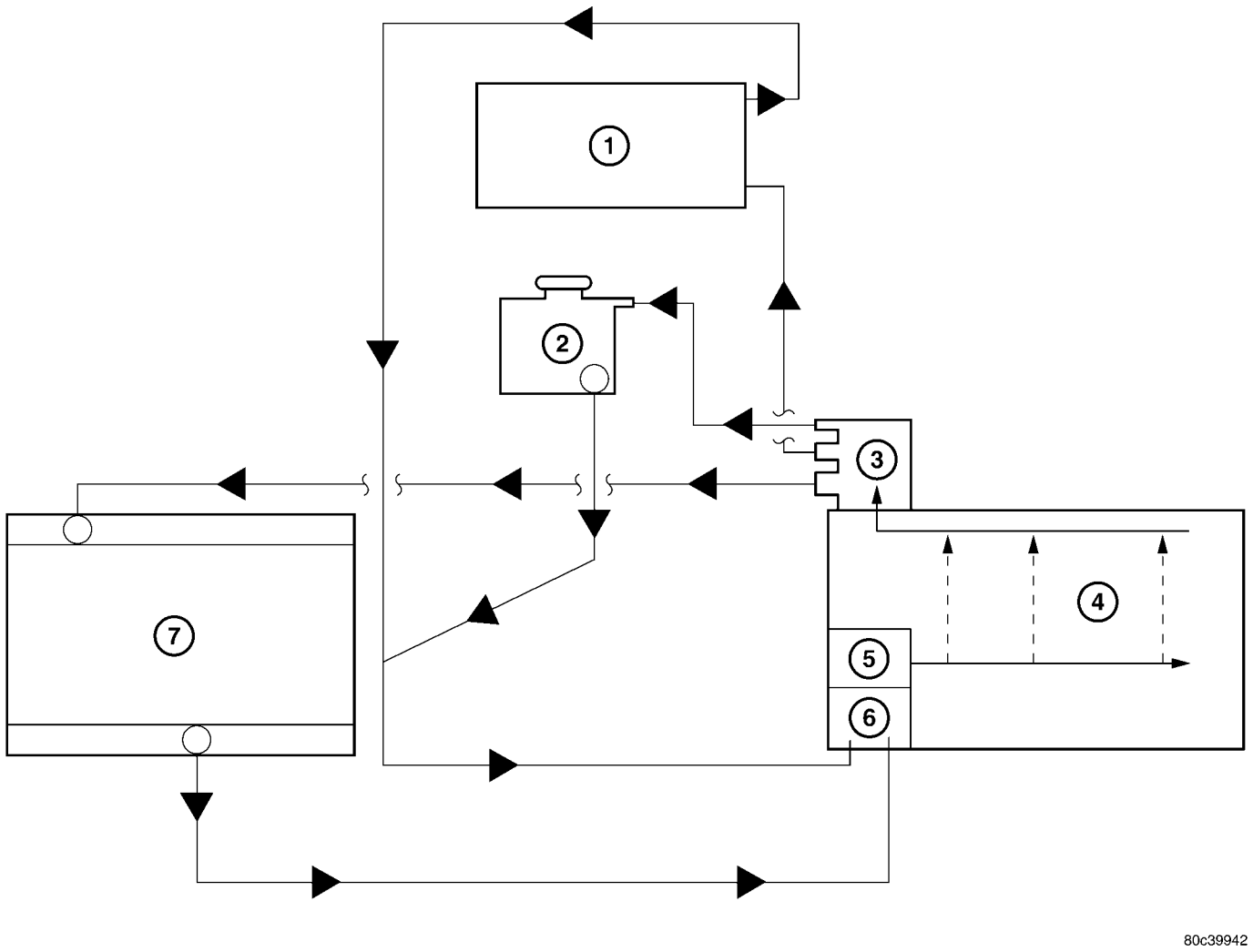

Fig. 3 Cooling System Operation - 2.7L

1 - HEATER CORE
2 - COOLANT PRESSURE CONTAINER
3 - COOLANT OUTLET CONNECTOR
4 - ENGINE
5 - WATER PUMP
6 - THERMOSTAT
7 - RADIATOR

ENGINE (Continued)

DIAGNOSIS AND TESTING

DIAGNOSIS AND TESTING - COOLING SYSTEM DIAGNOSIS

CONDITION	POSSIBLE CAUSE	CORRECTION
TEMPERATURE GAUGE READS LOW	1. Diagnostic Trouble Code (DTC) set indicating a stuck open engine thermostat.	1. (Refer to Appropriate Diagnostic Information) Replace thermostat, if necessary. If a (DTC) has not been set, the problem may be with the temperature gauge.
	2. Problem with engine coolant temperature (ECT) sensor or circuit.	2. Refer to the Appropriate Diagnostic Information for checking the ECT sensor
	3. Problem with Temperature gauge.	3. Check Gauge operation. (Refer to the Appropriate Diagnostic Information)
	4. Coolant level low during cold ambient temperature, accompanied by poor heater performance.	4. Check coolant level. (Refer to 7 - COOLING - STANDARD PROCEDURE) Inspect the system for leaks. Repair as necessary.
TEMPERATURE GAUGE READS HIGH OR ENGINE COOLANT WARNING LAMP ILLUMINATES. COOLANT MAY OR MAY NOT BE LOST FROM SYSTEM.	1. Trailer being towed, a steep hill being climbed, vehicle being operated in slow moving traffic, or engine idling during high ambient (outside) temperatures with air conditioning on. High altitudes could cause these conditions.	1. This may be a temporary condition and repair is not necessary. Turn off the air conditioning and drive the vehicle without any of the previous conditions. Observe the temperature gauge. The gauge should return to the normal range. If the gauge does not return to the normal range, determine the cause of the overheating and repair. Refer to POSSIBLE CAUSES in this section.
	2. Is temperature gauge (if equipped) reading correctly?	2. Check the gauge. (Refer to the Appropriate Diagnostic Information) Repair as necessary.
	3. Is temperature warning lamp (if equipped) illuminating unnecessarily?	3. Check warning lamp operation. (Refer to the Appropriate Diagnostic Information) Repair as necessary.
	4. Low coolant level.	4. Check for coolant leaks. (Refer to 7 - COOLING - DIAGNOSIS AND TESTING) Repair as necessary.
	5. Pressure cap not installed tightly. If cap is loose, boiling point of coolant will be lowered. Also refer to the following step 6.	5. Tighten pressure cap.

ENGINE (Continued)

CONDITION	POSSIBLE CAUSE	CORRECTION
	6. Poor seals at pressure cap.	6. (a) Check condition of cap and cap seals. (Refer to 7 - COOLING/ ENGINE/RADIATOR PRESSURE CAP - INSPECTION) Replace cap if necessary. (b) Check condition of filler neck. If neck is damaged, replace as necessary.
	7. Wrong pressure cap installed.	7. Vehicles equipped with 2.0L/2.4L engines use different pressure caps than vehicles equipped with 2.7L engines. Verify proper pressure cap part number.
	8. 2.0L/2.4L Vehicles: Coolant level low in radiator, but not in coolant recovery container. This indicates the radiator is not drawing coolant from the coolant recovery container as the engine cools. As the engine cools, a vacuum is formed inside the cooling system. If the radiator cap seals are defective, or the cooling system has a leak, a vacuum cannot be formed.	8. (a) Check condition of pressure cap and seals. Replace cap if necessary. (b) Check condition of filler neck. Replace if damaged. (c) Check condition of hose from filler neck to coolant container. It should be tight at both ends without any kinks or tears. Replace hose as necessary. (d) Check coolant recovery container and hose for blockage. Repair as necessary.
	9. Freeze point of coolant not correct. Mixture ratio may be too rich.	9. Check coolant concentration. (Refer to 7 - COOLING/ENGINE/ COOLANT - DIAGNOSIS AND TESTING) Adjust glycol-to-water ratio as required.
	10. Coolant not flowing through system.	10. (a) 2.0L/2.4L Vehicles: Check for coolant flow at filler neck with some coolant removed, engine warm, and thermostat open. Coolant should be observed flowing through filler neck. If flow is not observed, determine reason for lack of flow and repair as necessary. (b) 2.7L Vehicles: Engine coolant motion should be observable in coolant pressure container when revving the engine while running.
	11. Radiator or A/C condenser fins are dirty or clogged.	11. Clean obstruction from fins.
	12. Radiator core is plugged or corroded.	12. Clean or replace radiator as necessary.
	13. Fuel or ignition system problems.	13. (Refer to the Appropriate Diagnostic Information)

ENGINE (Continued)

CONDITION	POSSIBLE CAUSE	CORRECTION
	14. Dragging Brakes.	14. Inspect brake system and repair as necessary. (Refer to 5 - BRAKES/HYDRAULIC/ MECHANICAL - DIAGNOSIS AND TESTING)
	15. Bug screen or other aftermarket accessory is being used causing reduced air flow.	15. Remove bug screen or accessory.
	16. Thermostat partially or completely closed.	16. Check thermostat operation and replace as necessary. (Refer to 7 - COOLING/ENGINE/ENGINE COOLANT THERMOSTAT - DIAGNOSIS AND TESTING)
	17. Electric radiator fan not operating properly.	17. Check electric fan operation and repair as necessary.
	18. Cylinder head gasket leaking.	18. Check cylinder head gasket for leaks. (Refer to 9 - ENGINE/ CYLINDER HEAD - DIAGNOSIS AND TESTING)
	19. Heater core leaking.	19. Check heater core for leaks. Repair as necessary.
TEMPERATURE GAUGE READING IS INCONSISTENT (FLUCTUATES, CYCLES OR IS ERRATIC)	1. The gauge may cycle up and down. This is due to the cycling of the electric radiator fan and/or changing vehicle operating conditions.	1. A normal condition. No correction is necessary. If gauge cycling is going into the hot zone, check electric fan operation and repair as necessary. (Refer to 7 - COOLING/ ENGINE/RADIATOR FAN - DIAGNOSIS AND TESTING)
	2. During cold weather operation with the heater blower in the high position, the gauge reading may drop slightly.	2. A normal condition. No correction is necessary.
	3. Temperature gauge or engine coolant temperature sensor is defective or shorted.	3. Check operation of gauge and repair as necessary. (Refer to the Appropriate Diagnostic Information)
	4. Gauge reading rises when vehicle is brought to a stop after heavy use (engine still running).	4. A normal condition. No correction is necessary. The gauge should return to normal range after vehicle is driven.
	5. Gauge reading high after restarting a warmed-up (hot) engine.	5. A normal condition. No correction is necessary. The gauge should return to normal range after a few minutes of engine operation.
	6. Coolant level low (air will build up in the cooling system causing the thermostat to open late).	6. Check cooling system for leaks. Repair as necessary. (Refer to 7 - COOLING - DIAGNOSIS AND TESTING)

ENGINE (Continued)

CONDITION	POSSIBLE CAUSE	CORRECTION
	7. Cylinder head gasket leaking allowing exhaust gas to enter cooling system. This will cause thermostat to open late.	7. (a) Check for cylinder head gasket leaks. Repair as necessary. (Refer to 9 - ENGINE/CYLINDER HEAD - DIAGNOSIS AND TESTING) (b) Check for coolant in the engine oil. Inspect for white steam emitting from exhaust system. Repair as necessary.
	8. Water pump impeller or pulley loose on shaft.	8. Check water pump and replace as necessary.
	9. Air leak on the suction side of water pump allows air to build up in cooling system. This will cause the thermostat to open late.	9. Locate leak and repair as necessary.
PRESSURE CAP IS BLOWING OFF STEAM AND/OR COOLANT FLOWING INTO RECOVERY CONTAINER. TEMPERATURE GAUGE READING MAY BE ABOVE NORMAL, BUT NOT HIGH. COOLANT LEVEL MAY BE HIGH IN RECOVERY CONTAINER.	1. Pressure relief valve in pressure cap defective or wrong pressure cap installed.	1. Verify proper pressure cap part number. Check condition of pressure cap and seals. Replace as necessary. (Refer to 7 - COOLING/ ENGINE/RADIATOR PRESSURE CAP - DIAGNOSIS AND TESTING)
COOLANT LOSS TO THE GROUND WITHOUT PRESSURE CAP BLOWOFF. GAUGE IS READING HIGH OR HOT.	1. Coolant leaks in radiator, cooling system hoses, water pump or engine.	1. Pressure test and repair as necessary. (Refer to 7 - COOLING - DIAGNOSIS AND TESTING)
DETONATION OR PRE-IGNITION (NOT CAUSED BY IGNITION SYSTEM). GAUGE MAY OR MAY NOT BE READING HIGH.	1. Engine overheating.	1. Check reason for overheating and repair as necessary.
	2. Freeze point of coolant not correct.	2. Check the freeze point of the coolant. (Refer to 7 - COOLING/ ENGINE/COOLANT - DIAGNOSIS AND TESTING) Adjust glycol-to-water ratio as required.

ENGINE (Continued)

CONDITION	POSSIBLE CAUSE	CORRECTION
HOSE OR HOSES COLLAPSE WHEN ENGINE IS COOLING	1. Vacuum created in cooling system on engine cool-down is not being relieved through coolant recovery container system.	1. (a) Radiator pressure cap relief valve stuck. (Refer to 7 - COOLING/ ENGINE/RADIATOR PRESSURE CAP - DIAGNOSIS AND TESTING) Replace as necessary. (b) Hose between coolant recovery container and radiator is kinked. Repair as necessary. (c) Vent at coolant recovery container is plugged. Clean vent and repair as necessary. (d) Coolant recovery container is internally blocked or plugged. Check for blockage and repair as necessary.
ELECTRIC RADIATOR FAN OPERATES ALL THE TIME.	1. Fan relay, powertrain control module (PCM) or engine coolant temperature sensor defective. 2. Check for low coolant level.	1. (Refer to the Appropriate Diagnostic Information) Repair as necessary. 2. (Refer to 7 - COOLING - STANDARD PROCEDURE) Repair as necessary.
ELECTRIC RADIATOR FAN WILL NOT OPERATE. GAUGE READING HIGH OR HOT	1. Radiator fan motor defective. 2. Radiator fan relay, powertrain control module (PCM) or engine coolant temperature sensor defective. 3. Blown fuse in power distribution center (PDC).	1. (Refer to the Appropriate Diagnostic Information) Repair as necessary. 2. (Refer to the Appropriate Diagnostic Information) Repair as necessary. 3. Determine reason for blown fuse and repair as necessary.
NOISY FAN	1. Radiator fan blade loose. 2. Radiator fan blade striking a surrounding object. 3. Air obstructions at radiator or A/C condenser. 4. Radiator fan motor defective.	1. Replace fan assembly. 2. Locate point of fan blade contact and repair as necessary. 3. Remove obstructions and/or clean debris from radiator and/or A/C condenser. 4. Replace as necessary. (Refer to 7 - COOLING/ENGINE/RADIATOR FAN - DISASSEMBLY)

ENGINE (Continued)

CONDITION	POSSIBLE CAUSE	CORRECTION
INADEQUATE AIR CONDITIONER PERFORMANCE (COOLING SYSTEM SUSPECTED)	1. Radiator and/or air conditioning condenser is restricted, obstructed or dirty.	1. Remove restriction and/or clean as necessary.
	2. Electric radiator fan not operating when A/C is on.	2. (Refer to the Appropriate Diagnostic Information) Repair as necessary.
	3. Engine is overheating (heat may be transferred from radiator to A/C condenser). High underhood temperature due to engine overheating may also transfer heat to A/C components.	3. Correct overheating condition.
INADEQUATE HEATER PERFORMANCE.	1. Has a diagnostic trouble code (DTC) been set?	1. (Refer to the Appropriate Diagnostic Information)
	2. Coolant level low.	2. (Refer to 7 - COOLING - DIAGNOSIS AND TESTING) Repair as necessary.
	3. Obstructions in heater hose fittings at engine.	3. Remove heater hoses at both ends and check for obstructions. Repair as necessary.
	4. Heater hose kinked.	4. Locate kinked area and repair as necessary.
	5. Water pump is not pumping coolant to heater core. When the engine is fully warmed up, both heater hoses should be hot to the touch.	5. (Refer to 7 - COOLING/ENGINE/ WATER PUMP - DIAGNOSIS AND TESTING) Repair as necessary.
HEAT ODOR	1. Various heat shields are used at certain driveline components. One or more of these shields may be missing.	1. Locate missing shields and replace or repair as necessary.
	2. Is temperature gauge reading above the normal range?	2. Refer to the previous Temperature Gauge Reads High in these Diagnostic Charts. Repair as necessary.
	3. Radiator fan operating incorrectly.	3. (Refer to 7 - COOLING/ENGINE/ RADIATOR FAN - DIAGNOSIS AND TESTING) Repair as necessary.
	4. Has undercoating been applied to any unnecessary component?	4. Clean undercoating as necessary.
	5. Engine may be running rich causing the catalytic converter to overheat.	5. (Refer to the Appropriate Diagnostic Information) Repair as necessary.

ENGINE (Continued)

CONDITION	POSSIBLE CAUSE	CORRECTION
POOR DRIVEABILITY (THERMOSTAT POSSIBLY STUCK OPEN). GAUGE MAY BE READING LOW	1. For proper driveability, good vehicle emissions and for preventing build-up of engine oil sludge, the thermostat must be operating properly. Has a diagnostic trouble code (DTC) been set?	1. (Refer to the Appropriate Diagnostic Information) Replace thermostat if necessary.
STEAM IS COMING FROM FRONT OF VEHICLE NEAR GRILL AREA WHEN WEATHER IS WET, ENGINE IS WARMED UP, RUNNING, AND VEHICLE IS STATIONARY. TEMPERATURE GAUGE IS IN NORMAL RANGE.	1. During wet weather, moisture (snow, ice or rain condensation) on the radiator will evaporate when the thermostat opens. This opening allows heated water into the radiator. When the moisture contact the hot radiator, steam may be emitted. This usually occurs in cold weather with no fan or airflow to blow it away.	1. Occasional steam emitting from this area is normal. No repair is necessary.
COOLANT COLOR	1. Coolant color is not necessarily an indication of adequate corrosion or temperature protection. Do not rely on coolant color for determining condition of coolant.	1. Check the freeze point of the coolant. (Refer to 7 - COOLING/ ENGINE/COOLANT - DIAGNOSIS AND TESTING) Adjust the glycol-to-water ratio as required.
COOLANT LEVEL CHANGES IN COOLANT RECOVERY CONTAINER	1. Level changes are to be expected as coolant volume fluctuates with engine temperature. If the level in the container was between the MIN and MAX marks when the engine was cold, the level should return to within that range after operation at elevated temperatures.	1. A normal condition. No repair is necessary.

DIAGNOSIS AND TESTING - COOLING SYSTEM FLOW CHECK

To determine whether coolant is flowing through the cooling system, use one of the following procedures:

PREFERRED METHOD

WARNING: DO NOT REMOVE THE COOLING SYSTEM PRESSURE CAP OR ANY HOSE WITH THE SYSTEM HOT AND UNDER PRESSURE BECAUSE SERIOUS BURNS FROM COOLANT CAN OCCUR.

- **2.0L/2.4L:** Remove pressure cap when engine is cold. Remove small amount of coolant. Idle engine until thermostat opens. You should observe coolant flow while looking down the filler neck. Once flow is detected install the pressure cap. Replace removed coolant into coolant recovery container.
- **2.7L:** Start engine, coolant flow should be observable in coolant pressure container when revving the engine.

ALTERNATIVE METHOD

- If engine is cold, idle engine until normal operating temperature is reached. Feel the upper radiator hose. If it is hot, coolant is circulating.

ENGINE (Continued)

DIAGNOSIS AND TESTING - COOLING SYSTEM LEAK TESTING

WARNING: IF VEHICLE HAS BEEN RUN RECENTLY, WAIT 15 MINUTES BEFORE REMOVING PRESSURE CAP. PLACE A SHOP TOWEL OVER THE CAP, AND WITHOUT PUSHING DOWN, ROTATE IT COUNTER-CLOCKWISE TO THE FIRST STOP. ALLOW FLUIDS TO ESCAPE THROUGH THE OVERFLOW TUBE. WHEN THE SYSTEM STOPS PUSHING COOLANT AND STEAM INTO THE COOLANT RECOVERY BOTTLE AND PRESSURE DROPS, PUSH DOWN ON THE CAP AND REMOVE IT COMPLETELY. SQUEEZING THE RADIATOR INLET HOSE WITH A SHOP TOWEL (TO CHECK PRESSURE) BEFORE AND AFTER TURNING TO THE FIRST STOP IS RECOMMENDED.

Coolant level should be full. Add coolant if necessary. With engine not running, remove pressure cap and wipe the coolant filler neck sealing seat clean.

Attach a cooling system pressure tester (Tool 7700 or equivalent) to the coolant filler neck, as shown in (Fig. 4) or (Fig. 5) and apply 104 kPa (15 psi) pressure. If the pressure drops more than 2 psi in 2 minutes inspect all points for external leaks.

All hoses, radiator and heater, should be moved while at 104 kPa (15 psi) since some leaks occur while driving due to engine rock, etc.

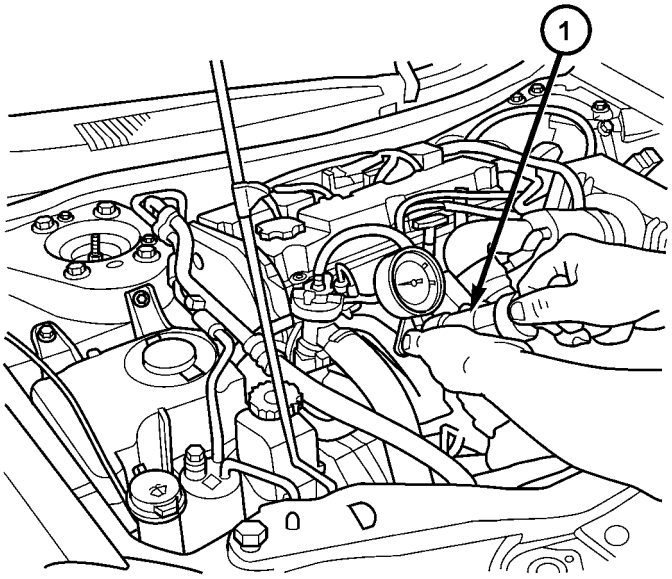

80b3929c

Fig. 4 PRESSURE TESTING COOLING SYSTEM - 2.0L/2.4L

1 - SPECIAL TOOL 7700

If there are no external leaks after the gauge dial shows a drop in pressure, detach the tester. Start engine and run the engine to normal operating temperature in order to open the thermostat and allow the coolant to expand. Reattach the tester. If the needle on the dial fluctuates, it indicates a combustion leak and is usually a head gasket leak.

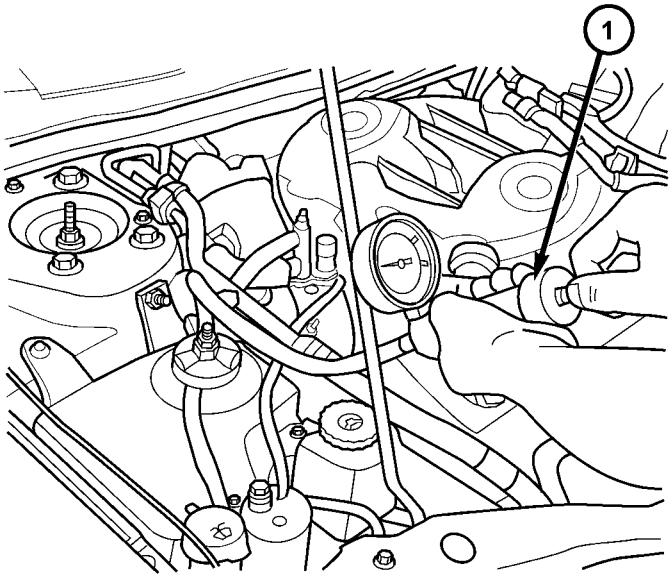

80b392a4

Fig. 5 PRESSURE TESTING COOLING SYSTEM - 2.7L

1 - SPECIAL TOOL 7700

WARNING: WITH TOOL IN PLACE PRESSURE BUILDS UP FAST. ANY EXCESSIVE AMOUNT OF PRESSURE BUILT UP BY CONTINUOUS ENGINE OPERATION MUST BE RELEASED TO A SAFE PRESSURE POINT. NEVER PERMIT PRESSURE TO EXCEED 138 kPa (20 psi).

If the needle on the dial does not fluctuate, race the engine a few times. If an abnormal amount of coolant or steam is emitted from the tailpipe, it may indicate a faulty head gasket, cracked engine block or cylinder head.

There may be internal leaks which can be determined by removing the oil dipstick. If water globules appear intermixed with the oil, it will indicate a internal leak in the engine. If there is an internal leak, the engine must be disassembled for repair.

DIAGNOSIS AND TESTING - COOLING SYSTEM AERATION

Low coolant level in a cross flow radiator will equalize in both tanks with engine off. With engine at running and at operating temperature, the high pressure inlet tank runs full and the low pressure outlet tank drops, resulting in cooling system aeration. Aeration will draw air into the water pump resulting in the following:

ENGINE (Continued)

- High reading shown on the temperature gauge.
- Loss of coolant flow through the heater core.
- Corrosion in the cooling system.
- Water pump seal may run dry, increasing the risk of premature seal failure.
- Combustion gas leaks into the coolant can also cause the above problems.

DIAGNOSIS AND TESTING - COOLING SYSTEM DEAERATION

2.0L/2.4L

Removal of air from the engine cooling system only occurs when the engine is first warming up. Air in the cooling system will collect under the cooling system pressure cap while the engine is run and will be pushed into the coolant recovery container. When the engine cools down, coolant will be drawn from the coolant recovery container back into the active cooling system. Once the thermostat opens, deaeration no longer occurs. Multiple warm up and cool down cycles may be required to remove all the air in the cooling system. If the system is very low on coolant, deaeration will not occur. Following the proper cooling system fill procedure is essential for proper operation. This system will not function if the wrong cooling system pressure cap is installed. Ensure proper cooling system pressure cap is used. Verify proper pressure cap part number.

2.7L

This engine has a premium system to remove air from the engine cooling system. Removal of air from the engine cooling system occurs continuously when the engine is run at speeds above idle. Thirty minutes of normal driving after a properly completed service fill will deaerate the engine cooling system. This system will not function if the wrong cooling system pressure cap is installed. Ensure proper cooling system pressure cap is used. Verify proper pressure cap part number.

STANDARD PROCEDURE

COOLANT LEVEL CHECK - ROUTINE

NOTE: Do not remove pressure cap for routine coolant level inspections.

The coolant bottle provides a quick visual method for determining the coolant level without removing the pressure cap. **With the engine cold and not running**, simply observe the level of the coolant in the coolant recovery container (2.0L/2.4L) (Fig. 6) or the coolant pressure container (2.7L) (Fig. 7). The level should be between the MIN and MAX marks.

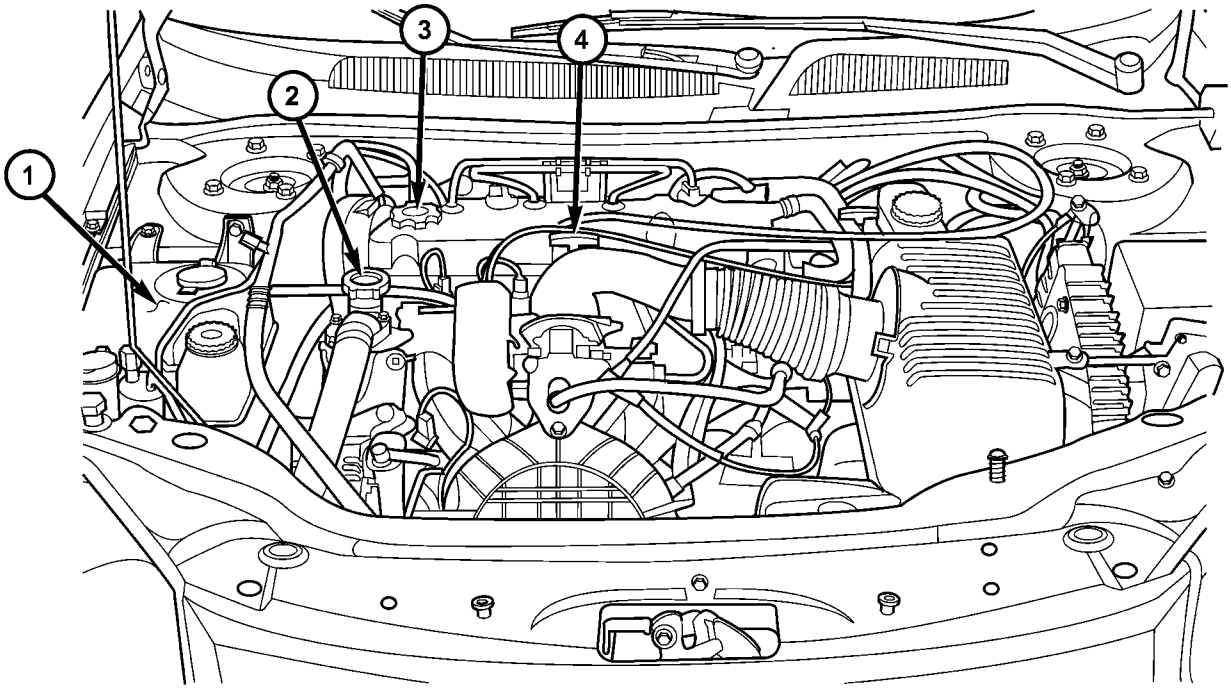

Fig. 6 Fluid Level Check - 2.0/2.4L

1 - COOLANT RECOVERY CONTAINER
2 - COOLANT PRESSURE CAP
3 - ENGINE OIL FILL
4 - ENGINE OIL DIPSTICK

ENGINE (Continued)

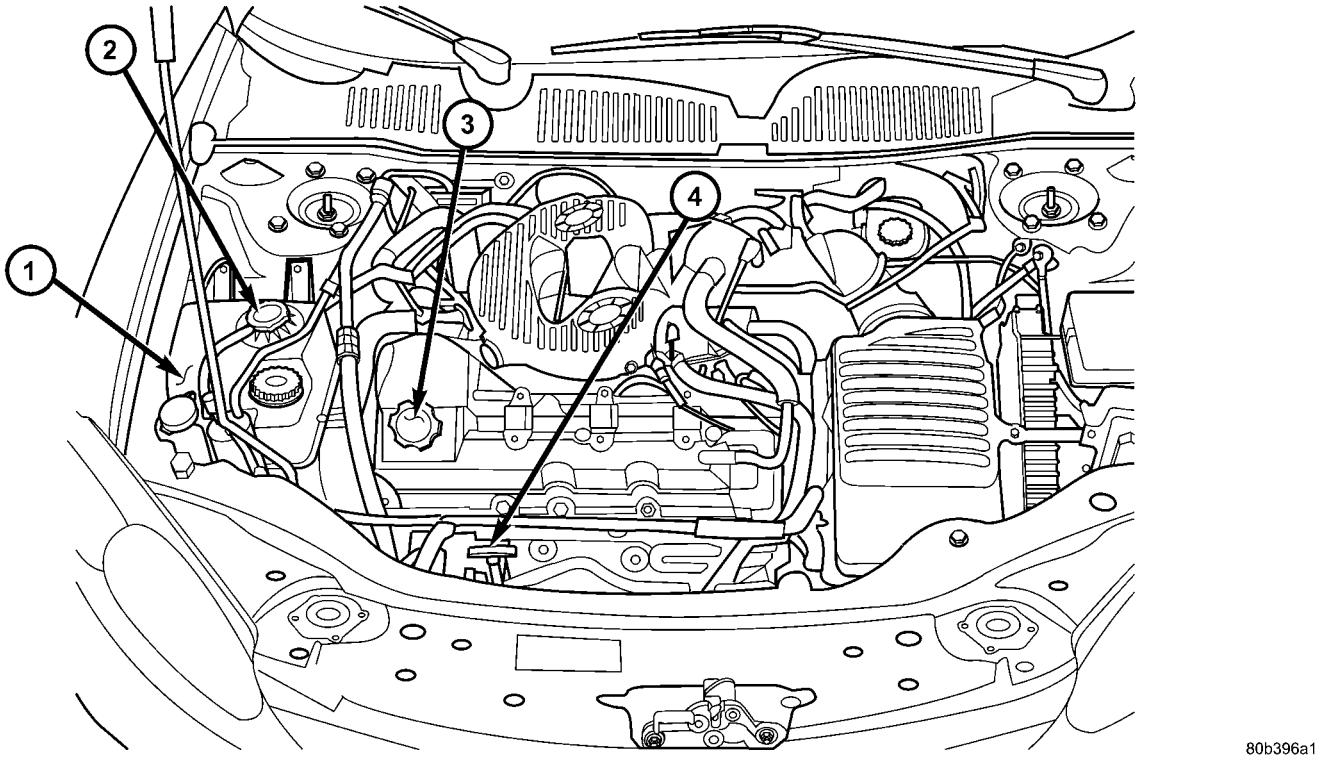

Fig. 7 Fluid Level Check - 2.7L

1 - COOLANT PRESSURE CONTAINER
2 - COOLANT PRESSURE CAP
3 - ENGINE OIL FILL
4 - ENGINE OIL DIPSTICK

COOLING SYSTEM - DRAINING

When servicing the cooling system, it is essential that coolant does not drip onto the accessory drive belts and/or pulleys. Shield the belts with shop towels before working on the cooling system. If coolant contacts the belts or pulleys, flush both with clean water.

WARNING: MAKE SURE ENGINE COOLING SYSTEM IS COOL BEFORE SERVICING. DO NOT REMOVE ANY CLAMPS OR HOSES , PRESSURE CAP, OR OPEN THE RADIATOR DRAINCOCK. WHEN THE SYSTEM IS HOT AND UNDER PRESSURE SERIOUS BURNS FROM COOLANT CAN OCCUR.

(1) Position a clean collecting container under draincock location.

(2) Open radiator draincock located at the lower right side of radiator. Turn draincock counterclockwise until it stops.

(3) Remove coolant pressure cap and open cooling system bleed valve.

(4) Raise vehicle on hoist.

(5) **2.7L:** Remove heater hose at heater tube located at the right front inner frame rail and direct coolant flow into container.

COOLING SYSTEM - FILLING

CAUTION: Do not use well water or suspect water supply in cooling system. A 50/50 mixture of the recommended ethylene glycol and distilled water is recommended.

NOTE: COOLING SYSTEM FILL PROCEDURE IS CRITICAL TO OVERALL COOLING SYSTEM PERFORMANCE.

NOTE: Make sure all hoses are connected and radiator draincock is closed.

FILLING - 2.0L/2.4L

(1) Close radiator draincock by turning clockwise.

(2) Open cooling system bleed valve (Fig. 8).

(3) Attach a 6.35 mm (0.250 in.) inside diameter clear hose that is 120.0 cm (48 in.) long to the bleed valve. Route the hose away from accessory drive belts and radiator fan. Position the other end of hose into a collecting container. The hose will prevent coolant from contacting accessory drive belts and other components.

ENGINE (Continued)

(4) Remove cooling system pressure cap and fill cooling system with recommended coolant.

(5) Slowly continue filling until a steady stream of coolant flows from attached hose on bleed valve.

(6) Close bleed valve and remove hose.

(7) Fill coolant to the top of pressure cap neck.

(8) Install cooling system pressure cap.

(9) Fill coolant recovery container to the MAX mark.

(10) Start engine and allow to run until thermostat opens and radiator fans cycle.

NOTE: It may be necessary to add additional coolant to the coolant recovery container after three or four warm-up/cool down cycles to maintain coolant level between the MIN and MAX marks; as additional trapped air is removed from the system.

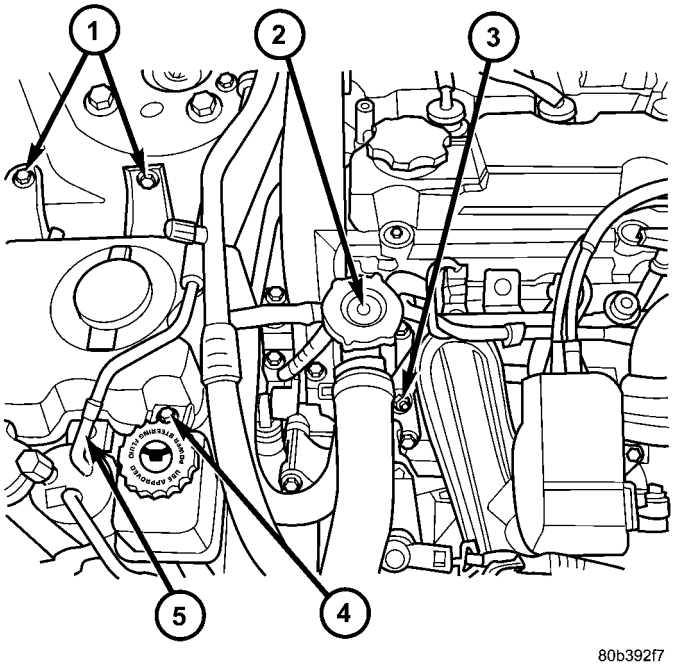

Fig. 8 Cooling System Filling - 2.0L/2.4L

1 - COOLANT RECOVERY CONTAINER FASTENERS
2 - COOLANT PRESSURE CAP
3 - COOLING SYSTEM BLEED VALVE
4 - POWER STEERING RESERVIOR FASTENER
5 - RECEIVER/DRIER FASTENER

FILLING - 2.7L

(1) Close radiator draincock by turning clockwise.

NOTE: IT IS IMPERATIVE THAT THE COOLING SYSTEM AIR BLEED VALVE BE OPENED BEFORE ANY COOLANT IS ADDED TO THE COOLING SYSTEM. FAILURE TO OPEN THE BLEED VALVE FIRST WILL RESULT IN AN INCOMPLETE FILL OF THE SYSTEM.

(2) Open cooling system bleed valve (Fig. 9).

(3) Attach a 6.35 mm (0.250 in.) inside diameter clear hose that is 120.0 cm (48 in.) long to the bleed valve. Route the hose away from accessory drive belts and radiator fan. Position the other end of hose into a collecting container. The hose will prevent coolant from contacting accessory drive belts and other components.

(4) Remove cooling system pressure cap. Attach Special Tool 8195, Filling Aid Funnel to coolant pressure container filler neck.

(5) Use the supplied clip to pinch overflow hose that connects between the two chambers of the pressure container (Fig. 9).

(6) Pour coolant into the larger section of Filling Aid Funnel (the smaller section of funnel is to allow air to escape).

(7) Slowly continue filling until a steady stream of coolant flows from attached hose on bleed valve.

(8) Close bleed valve and continue filling system to top of Filling Aid Funnel.

(9) Remove clip from overflow hose.

(10) Allow coolant in Filling Aid Funnel to drain into overflow chamber of pressure container.

(11) Remove Special Tool 8195, Filling Aid Funnel and install pressure cap on pressure container.

(12) Remove hose from bleed valve.

(13) Start engine and allow to run until thermostat opens and radiator fans cycle.

NOTE:
The engine cooling system will push any remaining air into the pressure container within about one half hour of normal driving. As a result, a drop in coolant level in the pressure container may occur.
If the engine cooling system overheats and pushes coolant into the overflow chamber of the pressure container, this coolant will be sucked back into the cooling system ONLY IF THE PRESSURE CAP IS LEFT ON THE PRESSURE CONTAINER. Removing the pressure cap breaks the vacuum path between the two chambers of the pressure container and the coolant will not return to the cooling system.

(14) Shut off engine and allow it to cool down. This permits coolant to be drawn into the pressure chamber.

(15) With engine COLD, observe coolant level in pressure chamber. Coolant level should be within MIN and MAX marks. Adjust coolant level as necessary.

CLEANING

Drain cooling system and refill with clean water. Refer to drain and fill procedures in this section. Run engine with radiator cap installed until upper radiator hose is hot. Stop engine and drain water from system. If water is dirty; fill, run, and drain system

ENGINE (Continued)

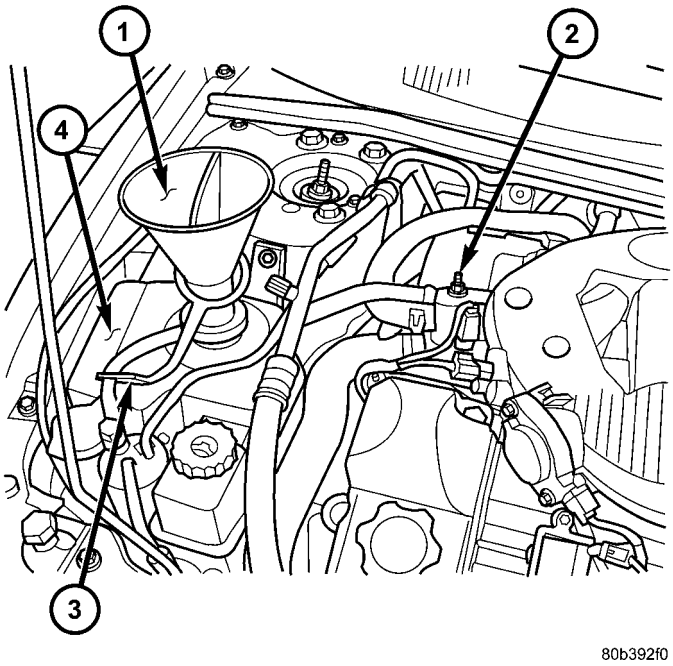

Fig. 9 Cooling System Filling - 2.7L

1 - SPECIAL TOOL 8195
2 - COOLING SYSTEM BLEED VALVE
3 - PINCH OVERFLOW HOSE
4 - COOLANT PRESSURE CONTAINER

again, until water runs clear. Refill cooling system with a 50/50 mixture of the recommended ethylene glycol and distilled water (Refer to LUBRICATION & MAINTENANCE/FLUID TYPES - DESCRIPTION).

INSPECTION

After performing a cleaning/flush procedure, inspect all hoses, clamps and connections for deterioration and leaks. Inspect radiator and heater core for leaks.

COOLANT

DESCRIPTION - ENGINE COOLANT

WARNING: ANTIFREEZE IS AN ETHYLENE GLYCOL BASE COOLANT AND IS HARMFUL IF SWALLOWED OR INHALED. IF SWALLOWED, DRINK TWO GLASSES OF WATER AND INDUCE VOMITING. IF INHALED, MOVE TO FRESH AIR AREA. SEEK MEDICAL ATTENTION IMMEDIATELY. DO NOT STORE IN OPEN OR UNMARKED CONTAINERS. WASH SKIN AND CLOTHING THOROUGHLY AFTER COMING IN CONTACT WITH ETHYLENE GLYCOL. KEEP OUT OF REACH OF CHILDREN. DISPOSE OF GLYCOL BASE COOLANT PROPERLY, CONTACT YOUR DEALER OR GOVERNMENT AGENCY FOR LOCATION OF COLLECTION CENTER IN YOUR AREA. DO NOT OPEN A COOLING SYSTEM WHEN THE ENGINE IS AT OPERATING TEMPERATURE OR HOT UNDER PRESSURE, PERSONAL INJURY CAN RESULT. AVOID RADIATOR COOLING FAN WHEN ENGINE COMPARTMENT RELATED SERVICE IS PERFORMED, PERSONAL INJURY CAN RESULT.

CAUTION: Use of Propylene Glycol based coolants is not recommended, as they provide less freeze protection and less boiling protection.

The cooling system is designed around the coolant. The coolant must accept heat from engine metal, in the cylinder head area near the exhaust valves and engine block. Then coolant carries the heat to the radiator where the tube/fin radiator can transfer the heat to the air.

The use of aluminum cylinder blocks, cylinder heads, and water pumps requires special corrosion protection. Mopar® Antifreeze/Coolant, 5 Year/100,000 Mile Formula (MS-9769), or the equivalent ethylene glycol base coolant with hybrid organic corrosion inhibitors (called HOAT, for Hybrid Organic Additive Technology) is recommended. This coolant offers the best engine cooling without corrosion when mixed with 50% Ethylene Glycol and 50% distilled water to obtain a freeze point of -37°C (-35°F). If it loses color or becomes contaminated, drain, flush, and replace with fresh properly mixed coolant solution.

The green coolant **MUST NOT BE MIXED** with the orange or magenta coolants. When replacing coolant the complete system flush must be performed before using the replacement coolant.

CAUTION: Mopar® Antifreeze/Coolant, 5 Year/100,000 Mile Formula (MS-9769) may not be mixed with any other type of antifreeze. Doing so will reduce the corrosion protection and may result in premature water pump seal failure. If non-HOAT coolant is introduced into the cooling system in an emergency, it should be replaced with the specified coolant as soon as possible.

DIAGNOSIS AND TESTING - COOLANT CONCENTRATION TESTING

Coolant concentration should be checked when any additional coolant was added to system or after a coolant drain, flush and refill. The coolant mixture offers optimum engine cooling and protection against corrosion when mixed to a freeze point of -37°C (-34°F) to -46°C (-50°F). The use of a hydrometer or a refractometer can be used to test coolant concentration.

A hydrometer will test the amount of glycol in a mixture by measuring the specific gravity of the mix-

COOLANT (Continued)

ture. The higher the concentration of ethylene glycol, the larger the number of balls that will float, and higher the freeze protection (up to a maximum of 60% by volume glycol).

A refractometer (Special Tool 8286)(Refer to 7 - COOLING - SPECIAL TOOLS) will test the amount of glycol in a coolant mixture by measuring the amount a beam of light bends as it passes through the fluid.

Some coolant manufactures use other types of glycols into their coolant formulations. Propylene glycol is the most common new coolant. However, propylene glycol based coolants do not provide the same freezing protection and corrosion protection and is not recommended.

CAUTION: Do not mix types of coolant—corrosion protection will be severely reduced.

STANDARD PROCEDURE

COOLANT - ADDING ADDITIONAL

NOTE: 2.0L/2.4L - The pressure cap should only be removed if the coolant recovery container is empty.

When additional coolant is needed, it should be added to the coolant recovery container (2.0L/2.4L)/ coolant pressure container (2.7L). Use only 50/50 concentration of ethylene glycol type antifreeze and distilled water.

STANDARD PROCEDURE - COOLANT SERVICE

For engine coolant recommended service schedule, (Refer to LUBRICATION & MAINTENANCE/MAINTENANCE SCHEDULES - DESCRIPTION).

COOLANT OUTLET CONNECTOR

REMOVAL

WARNING: DO NOT REMOVE PRESSURE CAP WITH THE SYSTEM HOT AND UNDER PRESSURE BECAUSE SERIOUS BURNS FROM COOLANT CAN OCCUR.

2.4L ENGINE

(1) Drain cooling system (Refer to 7 - COOLING/ ENGINE - STANDARD PROCEDURE).

(2) Remove pressure cap (Fig. 10).

(3) Disconnect hoses at coolant outlet connector.

(4) Remove bolts attaching coolant outlet connector.

(5) Remove coolant outlet connector.

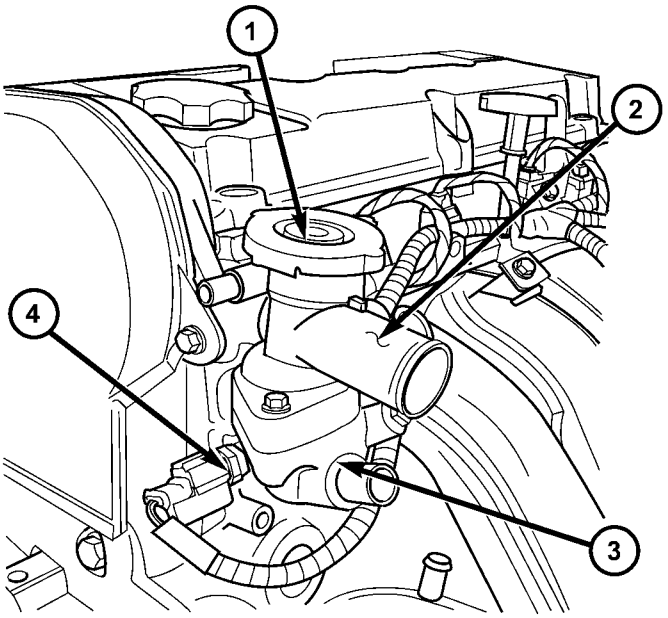

Fig. 10 Coolant Outlet Connector - 2.0L/2.4L

1 - PRESSURE CAP
2 - COOLANT OUTLET CONNECTOR
3 - THERMOSTAT HOUSING
4 - ENGINE COOLANT TEMPERATURE SENSOR

2.7L ENGINE

(1) Drain cooling system (Refer to 7 - COOLING/ ENGINE - STANDARD PROCEDURE).

(2) Remove upper intake manifold (Refer to 9 - ENGINE/MANIFOLDS/INTAKE MANIFOLD - REMOVAL).

(3) Disconnect engine coolant temperature (ECT) sensor connector.

(4) Disconnect hoses at coolant outlet connector. Use Special Tool 8495 Pliers to remove clamps (Fig. 11).

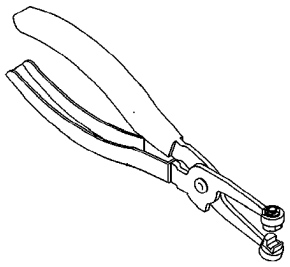

Fig. 11 Hose Clamp Pliers 8495

COOLANT OUTLET CONNECTOR (Continued)

(5) Remove bolts attaching coolant outlet connector (Fig. 12).

(6) Remove coolant outlet connector.

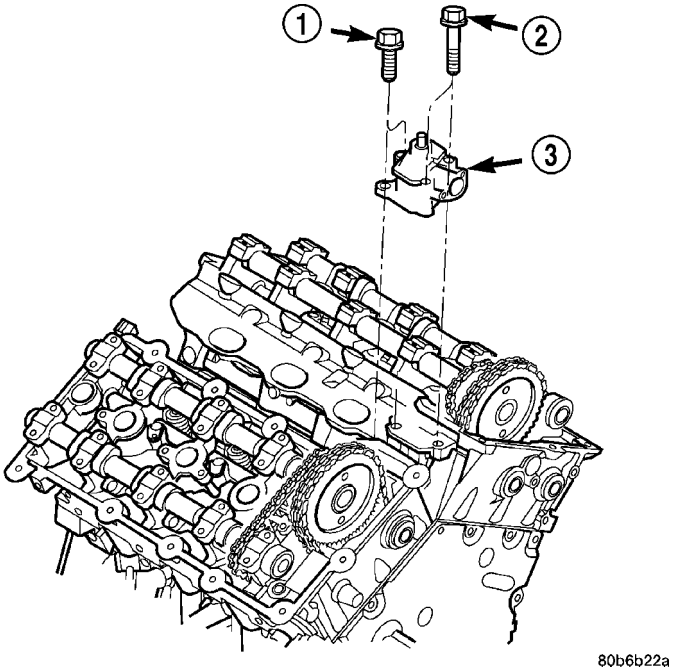

Fig. 12 Coolant Outlet Connector - 2.7L

1 - BOLT (2)
2 - BOLT (2)
3 - COOLANT OUTLET CONNECTOR

INSTALLATION

2.4L ENGINE

(1) Clean sealing surfaces. Inspect gaskets for tears and cuts. Replace as necessary.

(2) Install coolant outlet connector and tighten bolts to 12 N·m (105 in. lbs.) (Fig. 10).

(3) Connect hoses at coolant outlet connector.

(4) Fill cooling system (Refer to 7 - COOLING/ENGINE - STANDARD PROCEDURE).

2.7L ENGINE

(1) Clean sealing surfaces. Inspect gaskets for tears and cuts. Replace as necessary.

(2) Install coolant outlet connector and tighten bolts to 12 N·m (105 in. lbs.) (Fig. 12).

(3) Connect hoses at coolant outlet connector. Use Special Tool 8495 Pliers to install clamps (Fig. 11).

(4) Connect engine coolant temperature sensor connector.

(5) Install upper intake manifold (Refer to 9 - ENGINE/MANIFOLDS/INTAKE MANIFOLD - INSTALLATION).

(6) Fill cooling system (Refer to 7 - COOLING/ENGINE - STANDARD PROCEDURE).

COOLANT RECOVERY CONTAINER - 2.0L/2.4L

DESCRIPTION

The coolant recovery system consists of a container and an overflow hose that is connected to the coolant outlet connector (Fig. 13). The coolant recovery container is mounted in the right side engine compartment.

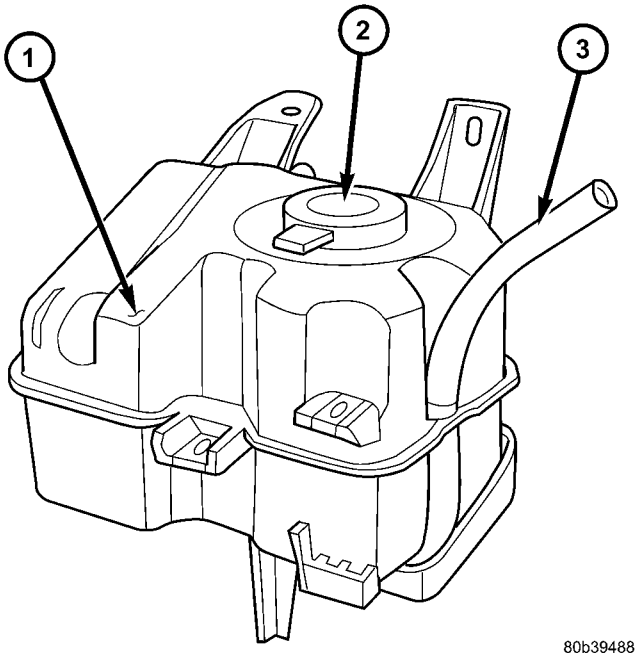

Fig. 13 Coolant Recovery Container - 2.0L/2.4L

1 - COOLANT RECOVERY CONTAINER
2 - CONTAINER FILL CAP
3 - OVERFLOW HOSE

OPERATION

This system works in conjunction with the pressure cap to utilize thermal expansion and contraction of the coolant to keep the coolant free of trapped air. It provides a volume for expansion and contraction, provides a convenient and safe method for checking coolant level, and adjusting level at atmospheric pressure without removing the pressure cap. It also provides some reserve coolant to cover minor leaks and evaporation or boiling losses.

REMOVAL

(1) Remove the power steering reservoir attaching screw.

(2) Remove the air conditioning receiver/dryer attaching screw.

(3) Unsnap the washer hose from the coolant recovery container.

COOLANT RECOVERY CONTAINER - 2.0L/2.4L (Continued)

(4) Disconnect the overflow hose from coolant outlet connector.
(5) Remove coolant recovery container screws.
(6) Remove coolant recovery container.

INSTALLATION

(1) Install container in mounting position and install attaching screws.
(2) Connect the overflow hose to the coolant outlet connector.
(3) Snap the washer hose into groove on coolant recovery container.
(4) Install the air conditioning receiver/dryer attaching screw.
(5) Install the power steering reservoir attaching screw.
(6) Fill cooling system (Refer to 7 - COOLING/ENGINE - STANDARD PROCEDURE).

COOLANT PRESSURE CONTAINER - 2.7L

DESCRIPTION

The coolant pressure container consists of a pressure chamber and a overflow chamber (Fig. 14). The coolant pressure container is mounted in the right side engine compartment. An overflow hose connects the pressure chamber to the overflow chamber.

NOTE: Coolant will normally be in the pressure chamber side of the coolant bottle. The overflow chamber should normally be empty

OPERATION

The pressure chamber keeps the coolant free of trapped air, provides a volume for expansion and contraction, and provides a convenient and safe method for checking and adjusting coolant level at atmospheric pressure. It also provides some reserve coolant to cover minor leaks, evaporation or boiling losses. The overflow chamber allows coolant recovery in case of an overheat.

REMOVAL

(1) Drain coolant below the coolant pressure container level.
(2) Remove the power steering reservoir attaching screw.
(3) Remove the air conditioning receiver/dryer attaching screw.
(4) Unsnap washer hose from the bottle.
(5) Disconnect the hose from coolant outlet connector to the bottle.
(6) Remove pressure container attaching screws.

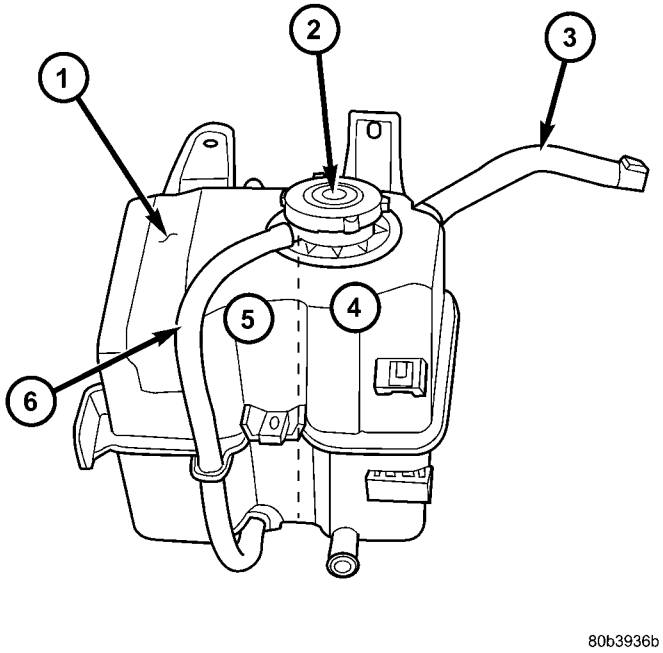

Fig. 14 Coolant Pressure Container - 2.7L

1 - COOLANT PRESSURE CONTAINER
2 - COOLANT PRESSURE CAP
3 - HOSE TO COOLANT OUTLET CONNECTOR
4 - PRESSURE CHAMBER
5 - OVERFLOW CHAMBER
6 - OVERFLOW HOSE

(7) Reposition pressure container and disconnect the heater hose at the container.
(8) Remove coolant pressure container.

INSTALLATION

(1) Connect heater hose to coolant pressure container.
(2) Install container in mounting position and install attaching screws.
(3) Connect the coolant outlet connector hose to the bottle.
(4) Snap washer hose into groove on coolant pressure container.
(5) Install the air conditioning receiver/dryer attaching screw.
(6) Install the power steering reservoir attaching screw.
(7) Fill cooling system (Refer to 7 - COOLING/ENGINE - STANDARD PROCEDURE).

ENGINE BLOCK HEATER

DESCRIPTION

DESCRIPTION - 2.0L/2.4L

The block heater is operated by ordinary house current (110 Volt A.C.) through a power cord and connector located in the engine compartment. The heater is mounted in a core hole (in place of a core hole plug) in the engine block, with the heating element immersed in coolant (Fig. 15).

CAUTION: The power cord must be secured in its retainer clips, and not positioned so it could contact linkages or exhaust manifolds and become damaged.

DESCRIPTION - 2.7L

The engine block heater is mounted in the cylinder block, near the right rear corner (Fig. 16). The block heater is a dry cylinder type design and is powered by 110 volt AC. **The power cord must be secured in its retainer clips, and not positioned so it could contact linkages or exhaust manifolds and become damaged.**

OPERATION

OPERATION - 2.0L/2.4L

The block heater element is submerged in the cooling system's coolant. When electrical power (110 volt A.C.) is applied to the element, it creates heat. This heat is transferred to the engine coolant. This provides easier engine starting and faster warm-up when vehicle is operated in areas having extremely low temperatures.

OPERATION - 2.7L

When power is applied (110 volt A.C.) to the block heater, the heating element transfers heat through the aluminum engine block and into the coolant without directly penetrating the cooling system.

DIAGNOSIS AND TESTING - ENGINE BLOCK HEATER TESTING

If unit does not operate, trouble can be in either the power cord or the heater element. Test power cord for continuity with a 110-volt voltmeter or 110-volt test light; test heater element continuity with an ohmmeter or 12-volt test light.

REMOVAL

REMOVAL - 2.0L/2.4L

(1) Drain cooling system (Refer to 7 - COOLING/ENGINE - STANDARD PROCEDURE).
(2) Raise vehicle on hoist.
(3) Detach power cord plug from heater.
(4) Loosen screw in center of heater. Remove heater assembly (Fig. 15).

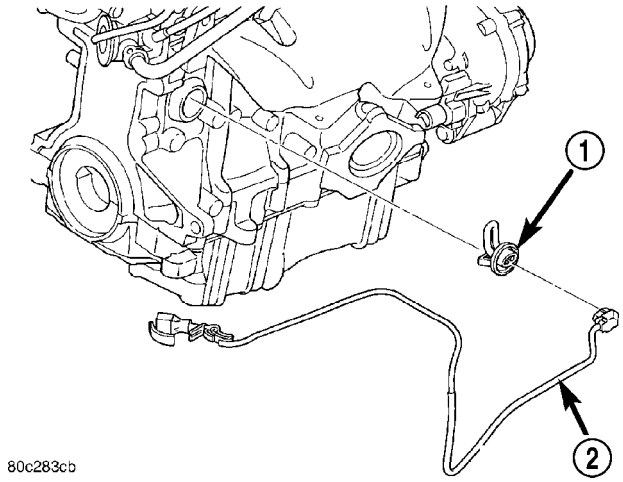

Fig. 15 Engine Block Heater

1 - BLOCK HEATER
2 - POWER CORD

REMOVAL - 2.7L

(1) Raise vehicle on hoist.
(2) Detach power cord plug from heater (Fig. 16).
(3) Remove block heater attaching screw located below heater terminals.
(4) Remove block heater from cylinder block.

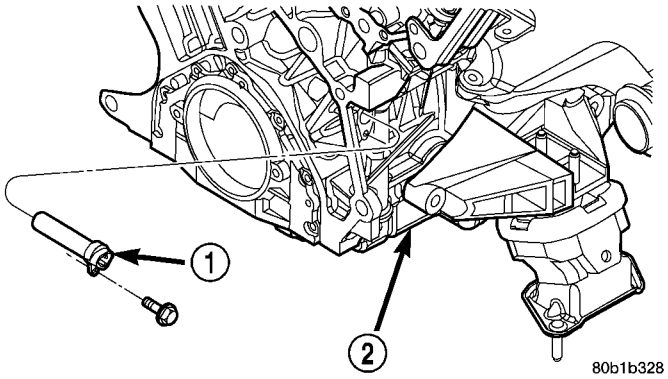

Fig. 16 ENGINE BLOCK HEATER

1 - BLOCK HEATER
2 - ENGINE — RIGHT SIDE

ENGINE BLOCK HEATER (Continued)

INSTALLATION

INSTALLATION - 2.0L/2.4L

(1) Thoroughly clean core hole and heater seat.

(2) Insert heater assembly with element loop positioned **upward** (Fig. 15).

(3) With heater seated, tighten center screw securely to assure a positive seal.

CAUTION: To prevent damage, the power cord must be secured in it's retaining clips, and not positioned so it could contact linkages or exhaust manifold.

(4) Connect power cord to heater.

(5) Lower vehicle.

(6) Fill cooling system (Refer to 7 - COOLING/ENGINE - STANDARD PROCEDURE).

INSTALLATION - 2.7L

(1) Thoroughly clean cylinder block heater cavity.

(2) Insert heater assembly into block such that mounting hole is located below heater terminals (Fig. 16).

(3) Install mounting screw and tighten to 12 N·m (105 in. lb.).

CAUTION: To prevent damage, the power cord must be secured in its retainer clips, and not positioned so it could contact linkages or exhaust manifolds.

(4) Attach power cord to heater.

(5) Lower vehicle.

ENGINE COOLANT TEMPERATURE SENSOR

DESCRIPTION

2.0L/2.4L ENGINE

The Engine Coolant Temperature (ECT) Sensor threads into the thermostat housing just below the coolant outlet connector (Fig. 17). The ECT Sensor is a negative thermal coefficient sensor.

2.7L ENGINE

The Engine Coolant Temperature (ECT) Sensor threads into the coolant outlet connector (Fig. 18). The ECT Sensor is a negative thermal coefficient sensor.

OPERATION

The ECT sensor provides an input to the PCM. As temperature increases, resistance of the sensor decreases. As coolant temperature varies, the ECT sensor resistance changes resulting in a different voltage value at the PCM ECT sensor signal circuit. The ECT sensor provides input for various PCM operations. The PCM uses the input to control air-fuel mixture, timing, and radiator fan on/off times. The PCM uses ECT sensor input to send messages over the PCI bus to various modules for other functions such as temperature gauge and AC operation.

REMOVAL

(1) With engine cold, partially drain cooling system below level of ECT sensor.

(2) Disconnect ECT sensor electrical connector (Fig. 17) or (Fig. 18).

(3) Remove ECT sensor.

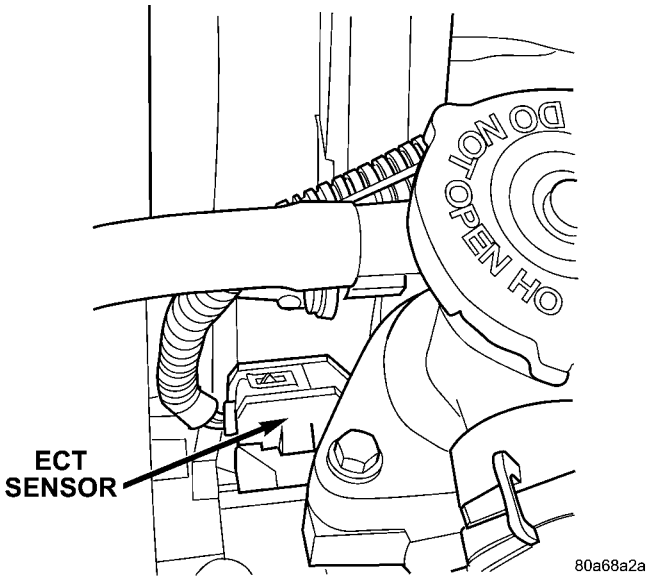

Fig. 17 ECT SENSOR 2.0L/2.4L

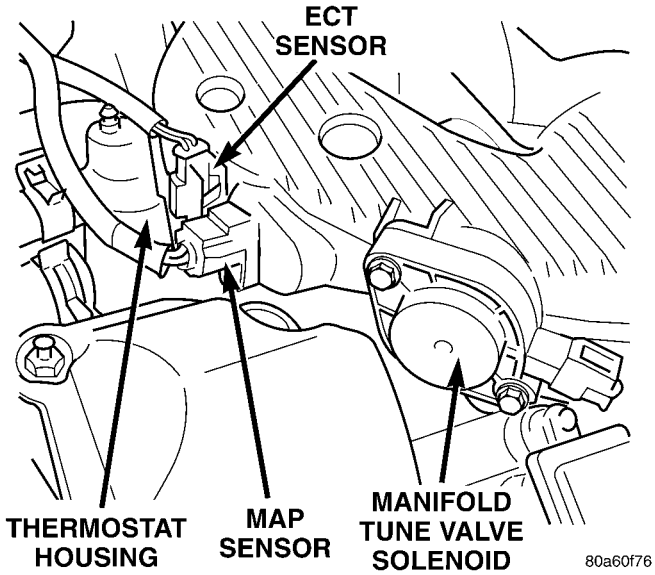

Fig. 18 ECT SENSOR 2.7L

ENGINE COOLANT TEMPERATURE SENSOR (Continued)

INSTALLATION

(1) Install ECT sensor. Torque sensor to 19 N·m (168 in. lbs.).

(2) Reconnect ECT sensor electrical sensor.

(3) Fill cooling system (Refer to 7 - COOLING/ENGINE - STANDARD PROCEDURE).

ENGINE COOLANT THERMOSTAT

DESCRIPTION

DESCRIPTION - 2.0L/2.4L

The thermostat is located on the front of the engine (radiator side) in the thermostat housing/coolant outlet connector (Fig. 19). The thermostat has a air bleed vent located in the flange and an O-ring with a locating dimple incorporated on it. There is a relief in the housing for positioning the air bleed.

DESCRIPTION - 2.7L

The thermostat is located on the lower left side of engine, near the front (Fig. 20). The thermostat is on the inlet side of the water pump. It has an air bleed located in the thermostat flange. The air bleed allows internal trapped air during cooling system filling to be released.

OPERATION

The engine cooling thermostat is a wax pellet driven, reverse poppet choke type. The thermostat is designed to provide the fastest warm up possible by preventing leakage through it and to guarantee a minimum engine operating temperature of 88 to 93°C (192 to 199°F). The thermostat also will automatically reach wide open so it will not restrict flow to the radiator as temperature of the coolant rises in hot weather to around 104°C (220°F). Above this temperature the coolant temperature is controlled by the radiator, fan, and ambient temperature, not the thermostat.

The thermostat is operated by a wax filled container (pellet) which is sealed. When heated coolant reaches a predetermined temperature, the wax expands enough to overcome the closing spring and water pump pressure, which forces the valve to open.

DIAGNOSIS AND TESTING - ENGINE COOLANT THERMOSTAT TESTING

The thermostat is operated by a wax filled container (pellet) which is sealed. When heated coolant reaches a predetermined temperature the wax pellet expands enough to overcome the closing spring and water pump pressure, which forces the valve to open. Coolant leakage into the pellet will cause a thermostat to fail open. Do not attempt to free up a thermostat with a screwdriver.

The thermostat that opens too soon type failure mode is included in the on-board diagnosis. The check engine light will not be lit by an open too soon condition. If it has failed open, a diagnostic trouble code (DTC) will be set. Do not change a thermostat for lack of heater performance or temperature gauge position, unless a DTC is present. For other probable causes, (Refer to 7 - COOLING/ENGINE - DIAGNOSIS AND TESTING). Thermostat failing shut is the normal long term mode of failure, and normally, only on high mileage vehicles. The temperature gauge will indicate this. (Refer to 7 - COOLING/ENGINE - DIAGNOSIS AND TESTING)

REMOVAL

REMOVAL - 2.0L/2.4L

WARNING: DO NOT REMOVE PRESSURE CAP OR ANY HOSE WITH THE SYSTEM HOT AND UNDER PRESSURE BECAUSE SERIOUS BURNS FROM COOLANT CAN OCCUR.

(1) Partially drain cooling system below thermostat level.

(2) Disconnect hoses at coolant outlet connector.

(3) Remove bolts attaching coolant outlet connector (Fig. 19).

(4) Remove coolant outlet connector and thermostat.

REMOVAL - 2.7L

(1) Disconnect negative cable from remote jumper terminal.

WARNING: DO NOT REMOVE PRESSURE CAP OR ANY HOSE WITH THE SYSTEM HOT AND UNDER PRESSURE BECAUSE SERIOUS BURNS FROM COOLANT CAN OCCUR.

(2) Drain cooling system (Refer to 7 - COOLING/ENGINE - STANDARD PROCEDURE).

(3) Raise vehicle on hoist.

(4) Remove right front wheel and belt splash shield.

(5) Remove accessory drive belts (Refer to 7 - COOLING/ACCESSORY DRIVE/DRIVE BELTS - REMOVAL).

(6) Remove lower generator mounting bolt.

(7) Lower vehicle.

(8) Disconnect generator electrical connectors.

ENGINE COOLANT THERMOSTAT (Continued)

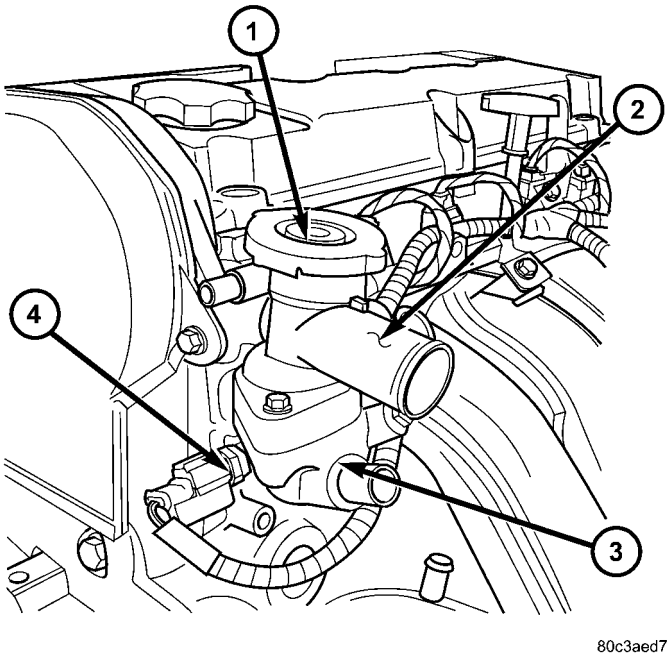

Fig. 19 Coolant Outlet Connector - 2.0L/2.4L

1 - PRESSURE CAP
2 - COOLANT OUTLET CONNECTOR
3 - THERMOSTAT HOUSING
4 - ENGINE COOLANT TEMPERATURE SENSOR

(9) Disconnect AC clutch and AC pressure sensor electrical connectors. Reposition wiring harness.

(10) Remove oil dipstick and tube. Plug hole in oil pan where dipstick tube mounts with water tight stopper.

WARNING: IF HOLE FOR DIPSTICK TUBE IN OIL PAN IS NOT PLUGGED, COOLANT WILL ENTER OIL PAN. SERIOUS ENGINE DAMAGE CAN OCCUR.

(11) Remove remaining generator mounting bolts. Remove generator.

(12) Disconnect hoses at thermostat housing.

(13) Remove thermostat housing bolts (Fig. 20).

(14) Remove thermostat and housing.

INSTALLATION

INSTALLATION - 2.0L/2.4L

(1) Clean sealing surfaces.

(2) Place the new thermostat assembly into the coolant outlet connector. Align air bleed with notch on the coolant outlet connector (Fig. 21).

(3) Install coolant outlet connector onto thermostat housing and tighten bolts to 12.5 N·m (110 in. lbs.) (Fig. 19).

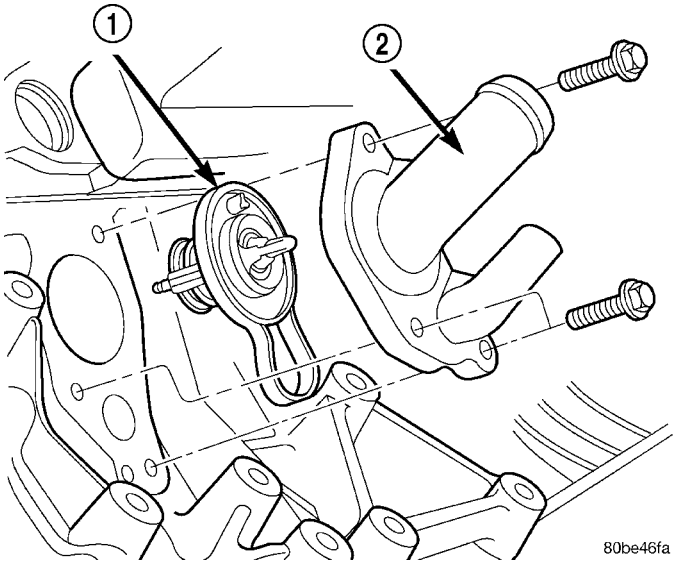

Fig. 20 Thermostat and Housing—2.7L Engine

1 - THERMOSTAT AND GASKET
2 - THERMOSTAT HOUSING/COOLANT INLET

(4) Connect hoses to coolant outlet connector.

(5) Fill cooling system (Refer to 7 - COOLING/ENGINE - STANDARD PROCEDURE).

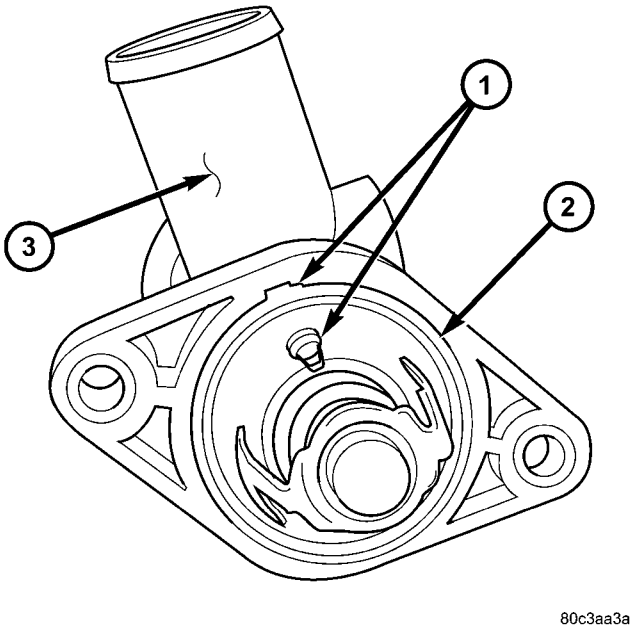

Fig. 21 Thermostat Indexing - 2.0L/2.4L

1 - ALIGN AIR BLEED WITH NOTCH IN COOLANT OUTLET CONNECTOR
2 - THERMOSTAT SEAL
3 - COOLANT OUTLET CONNECTOR

ENGINE COOLANT THERMOSTAT (Continued)

INSTALLATION - 2.7L

(1) Clean gasket sealing surfaces.

NOTE: Install thermostat with the bleed valve located at the 12 o'clock position.

(2) Install thermostat and gasket into the thermostat housing.
(3) Install thermostat and housing to cylinder block. Tighten attaching bolts to 12 N·m (105 in. lbs.) (Fig. 20).
(4) Connect hoses at thermostat housing.
(5) Install generator and attaching bolts.

CAUTION: Before removing plug in oil pan, clean residual coolant from area.

(6) Remove plug in oil pan and install engine oil dipstick tube.
(7) Reconnect AC clutch and AC pressure sensor connectors.
(8) Reconnect generator connectors.
(9) Raise vehicle on hoist.
(10) Install accessory drive belts (Refer to 7 - COOLING/ACCESSORY DRIVE/DRIVE BELTS - INSTALLATION).
(11) Install belt splash shield and right front wheel.
(12) Lower vehicle.
(13) Reconnect negative battery cable.
(14) Fill cooling system (Refer to 7 - COOLING/ ENGINE - STANDARD PROCEDURE).

HOSE CLAMPS

DESCRIPTION - HOSE CLAMPS

The cooling system uses constant tension spring type hose clamps. If a spring type clamp replacement is necessary, replace with the original Mopar® equipment spring type clamp.

Vehicles equipped with a 2.7L engine, use unique "Low Profile" type constant tension hose clamps at the coolant outlet connector hoses.

CAUTION: A number or letter is stamped into the tongue of constant tension clamps. If replacement is necessary, use only an original equipment clamp with matching number or letter (Fig. 22) or (Fig. 23).

OPERATION - HOSE CLAMPS

The constant tension type hose clamps maintain constant clamping force on the hose connections as the temperature of the cooling system rises and falls. Worm gear type hose clamps may not have sufficient clamping force in colder weather conditions if installed during warm weather.

To remove a spring type hose clamp, use Special Tool 8495 Hose Clamp Pliers, or equivalent, (Fig. 24) to compress the hose clamp.

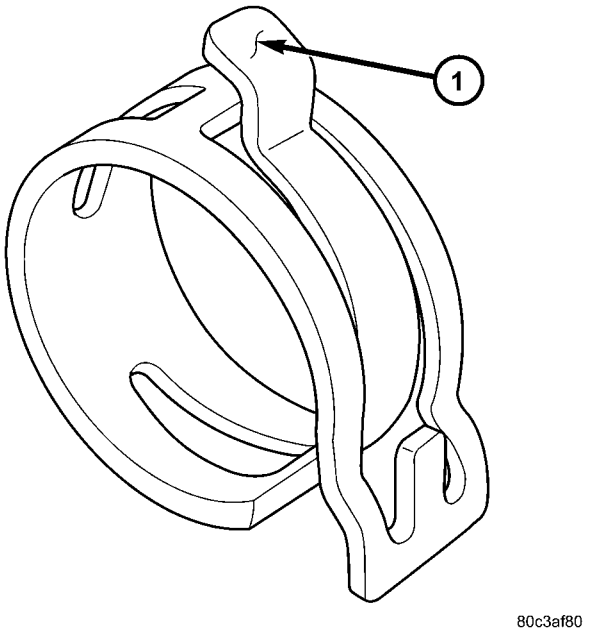

Fig. 22 "Low Profile" Spring Clamp Size Location

1 - SPRING CLAMP SIZE LOCATION

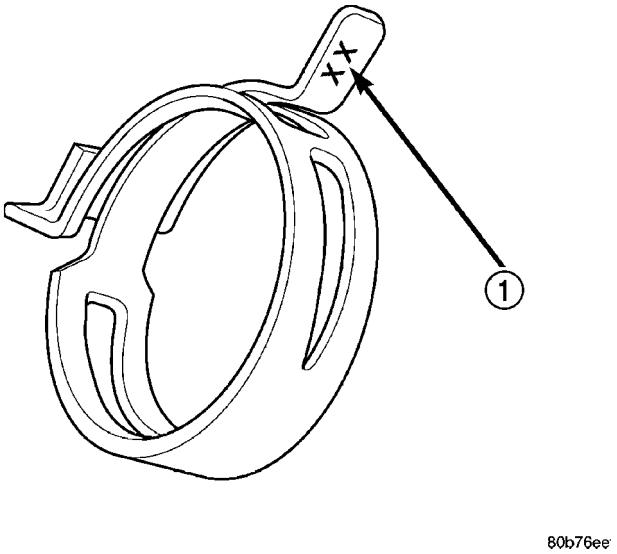

Fig. 23 Spring Clamp Size Location

1 - SPRING CLAMP SIZE LOCATION

HOSE CLAMPS (Continued)

NOTE: Special Tool 8495 was specifically designed for use on the "Low Profile" type hose clamps used at the coolant outlet connector hoses on the 2.7L engine. The pliers are also compatible with other styles of constant tension type hose clamps.

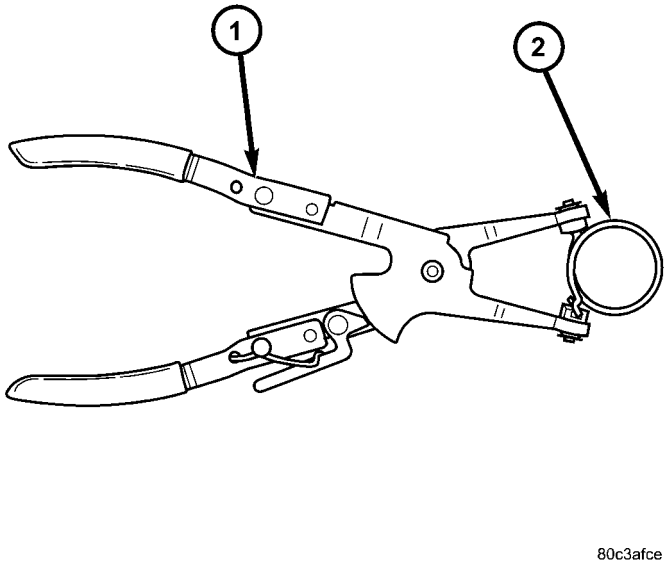

Fig. 24 Hose Clamp Pliers

1 - SPECIAL TOOL 8495 HOSE CLAMP PLIERS
2 - HOSE CLAMP

RADIATOR

REMOVAL

(1) Disconnect negative cable from auxiliary jumper terminal.

WARNING: DO NOT REMOVE PRESSURE CAP OR ANY HOSE WITH THE SYSTEM HOT AND UNDER PRESSURE BECAUSE SERIOUS BURNS FROM COOLANT CAN OCCUR.

(2) Drain cooling system (Refer to 7 - COOLING/ ENGINE - STANDARD PROCEDURE).
(3) Remove upper radiator crossmember (Fig. 25).

CAUTION: Plastic tanks, while stronger than brass are subject to damage by impact, such as wrenches.

(4) Disconnect the radiator fan electrical connector.
(5) Remove radiator fan.
(6) Disconnect hoses from radiator.
(7) Remove screw that holds support bracket for transmission cooler tubes at left side of radiator (if equipped).

CAUTION: Avoid bending the condenser inlet tube. Care should be taken not to damage radiator or condenser cooling fins.

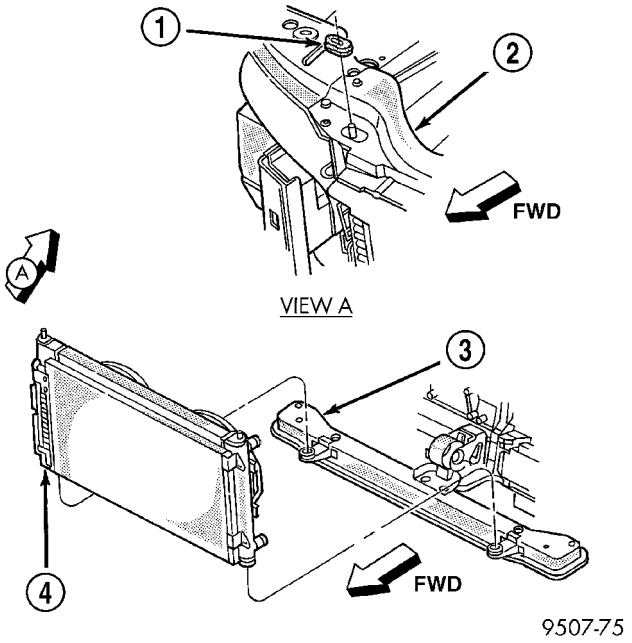

Fig. 25 Cooling Module Mounting

1 - ISOLATOR
2 - UPPER RADIATOR CROSSMEMBER
3 - LOWER RADIATOR CROSSMEMBER
4 - COOLING MODULE

(8) Remove the air conditioning condenser attaching screws located at the front of the radiator (Fig. 26). Disengage AC condenser from radiator. It is not necessary to discharge the air conditioning system to remove radiator.

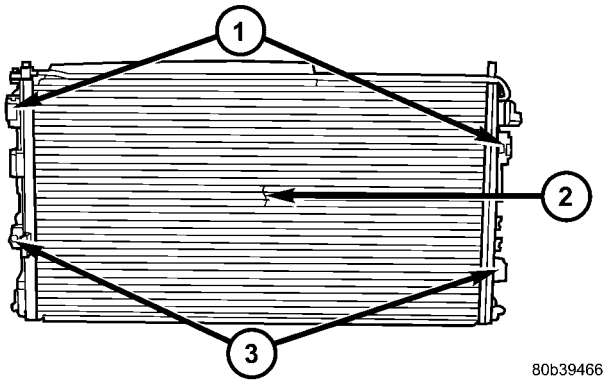

Fig. 26 A/C CONDENSER MOUNTING

1 - A/C CONDENSER LOCATING TABS
2 - COMBINATION A/C CONDENSER AND TRANSMISSION OIL COOLER
3 - A/C CONDENSER MOUNTING SCREWS

(9) Radiator can now be lifted free from engine compartment. **Care should be taken not to damage radiator or condenser cooling fins during removal.**

RADIATOR (Continued)

CLEANING

Clean radiator fins are necessary for good heat transfer. The radiator and air conditioning fins should be cleaned when an accumulation of debris has occurred. With the engine cold, apply cold water and compressed air to the back (engine side) of the radiator to flush the radiator and/or A/C condenser of debris.

INSPECTION

Inspect the radiator tanks for cracks, broken or missing fittings also inspect the joint where the tanks seam up to the radiator core for signs of leakage and/or deteriorating seals.

Inspect radiator core for corroded, bent or missing cooling fins. Inspect the core for bent or damaged cooling tubes.

INSTALLATION

(1) Slide radiator into position and seat the radiator assembly lower rubber isolators in the mount holes.

(2) Attach air conditioning condenser to radiator. Tighten mounting screws to 5 N·m (45 in. lbs.).

(3) Install transmission oil cooler tube support bracket and attaching screw to left side of radiator. Tighten mounting screw to 5 N·m (45 in. lbs.).

(4) Connect hoses to radiator.

(5) Install radiator fan.

(6) Connect radiator fan electrical connector.

(7) Install upper radiator crossmember.

(8) Connect negative cable to auxiliary jumper terminal.

(9) Fill cooling system(Refer to 7 - COOLING/ENGINE - STANDARD PROCEDURE).

RADIATOR DRAINCOCK

REMOVAL

CAUTION: Use of pliers on draincock is not recommended. Damage may occur to radiator or draincock.

NOTE: It is not necessary to remove draincock during a routine coolant drain.

(1) Drain the cooling system (Refer to 7 - COOLING/ENGINE - STANDARD PROCEDURE).

(2) Open the draincock by turning it counterclockwise until it stops.

(3) Turn the draincock back (clockwise) 1/8 turn.

(4) Pull the draincock (Fig. 27) from the radiator tank.

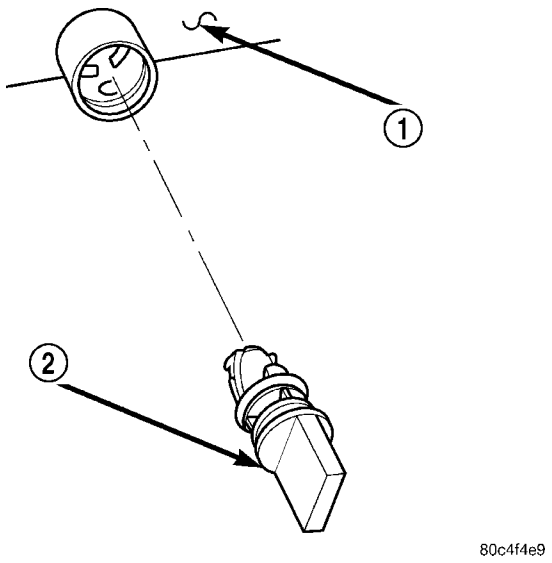

Fig. 27 Draincock

1 - RADIATOR TANK
2 - DRAINCOCK

INSTALLATION

(1) Align draincock stem to radiator tank opening.

(2) Push draincock into the radiator tank opening.

(3) Tighten the draincock by turning clockwise until it stops.

(4) Fill the cooling system (Refer to 7 - COOLING/ENGINE - STANDARD PROCEDURE).

PRESSURE CAP

DESCRIPTION

CAUTION: Vehicles equipped with 2.0L/2.4L engines use a different pressure cap than vehicles equipped with 2.7L engines. The pressure caps are NOT interchangeable. Verify proper pressure cap part number.

The cooling system is equipped with a pressure cap that releases built up pressure, maintaining a range of 97-124 kPa (14-18 psi).

There is also a vent valve in the center of the cap. This valve also opens when coolant is cooling and contracting, allowing coolant to return to radiator from coolant reserve/recovery system container by vacuum through connecting hose. **If valve is stuck shut, the radiator hoses will be collapsed on cool down. Clean the vent valve (Fig. 28) to ensure proper sealing when boiling point is reached.**

PRESSURE CAP (Continued)

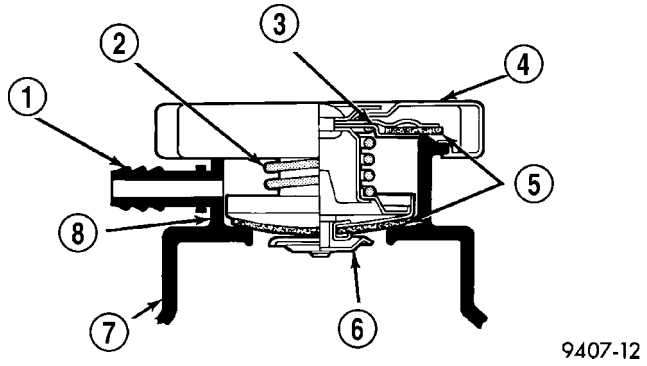

Fig. 28 Cooling System Pressure Cap

1 - OVERFLOW NIPPLE
2 - MAIN SPRING
3 - GASKET RETAINER
4 - STAINLESS-STEEL SWIVEL TOP
5 - RUBBER SEALS
6 - VENT VALVE
7 - COOLANT OUTLET CONNECTOR (2.0L/2.4L)/PRESSURE CONTAINER (2.7L)
8 - FILLER NECK

OPERATION

CAUTION: Vehicles equipped with 2.0L/2.4L engines use a different pressure cap than vehicles equipped with 2.7L engines. The pressure caps are NOT interchangeable. Verify proper pressure cap part number.

The pressure cap allows the cooling system to operate at higher than atmospheric pressure. The higher pressure raises the coolant boiling point; this allows increased radiator cooling capacity.

The gasket in the cap seals the filler neck, so that vacuum can be maintained, allowing coolant to be drawn back into the cooling system from the reserve container.

DIAGNOSIS AND TESTING

DIAGNOSIS AND TESTING - PRESSURE CAP TESTING

CAUTION: Vehicles equipped with 2.0L/2.4L engines use a different pressure cap than vehicles equipped with 2.7L engines. The pressure caps are NOT interchangeable. Verify proper pressure cap part number.

Dip the pressure cap in water. Clean any deposits off the vent valve or its seat and apply cap to end of the Pressure Cap Test Adaptor that is included with the Cooling System Tester 7700. Working the plunger, bring the pressure to 104 kPa (15 psi) on the gauge. If the pressure cap fails to hold pressure of at least 97 kPa (14 psi), replace the pressure cap.

CAUTION: The Cooling System Tester Tool is very sensitive to small air leaks that will not cause cooling system problems. A pressure cap that does not have a history of coolant loss should not be replaced just because it leaks slowly when tested with this tool. Add water to the tool. Turn tool upside down and recheck pressure cap to confirm that cap is bad.

If the pressure cap tests properly while positioned on Cooling System Tester (Fig. 29), but will not hold pressure or vacuum when positioned on the filler neck. Inspect the filler neck and cap top gasket for irregularities that may prevent the cap from sealing properly.

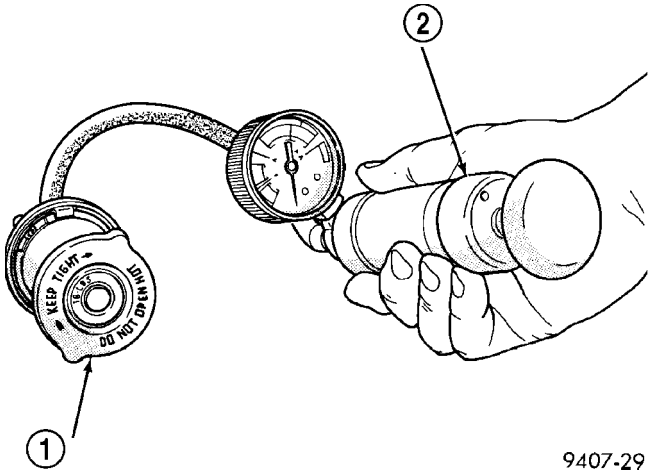

Fig. 29 Testing Cooling System Pressure Cap

1 - PRESSURE CAP
2 - PRESSURE TESTER

DIAGNOSIS AND TESTING - COOLING SYSTEM PRESSURE RELIEF TESTING

WARNING: THE WARNING WORDS “DO NOT OPEN HOT” ON THE PRESSURE CAP IS A SAFETY PRECAUTION. WHEN HOT, THE COOLING SYSTEM BUILDS UP PRESSURE. TO PREVENT SCALDING OR OTHER INJURY, THE PRESSURE CAP SHOULD NOT BE REMOVED WHILE THE SYSTEM IS HOT AND/OR UNDER PRESSURE.

CAUTION: Vehicles equipped with 2.0L/2.4L engines use a different pressure cap than vehicles equipped with 2.7L engines. The pressure caps are NOT interchangeable. Verify proper pressure cap part number.

The pressure cap upper gasket to filler neck seal can be checked by removing the overflow hose at the filler neck overflow nipple (Fig. 30). Attach the radiator pressure tester to the **filler neck overflow**

PRESSURE CAP (Continued)

nipple, and pump air into the system. The pressure cap upper gasket should relieve pressure at 69-124 kPa (10-18 psi), and hold pressure at 55 kPa (8 psi) minimum.

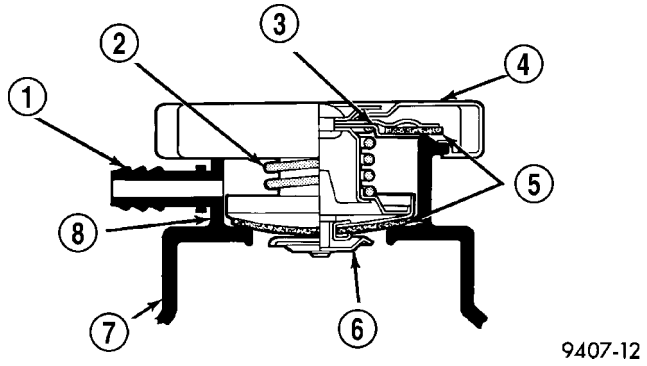

Fig. 30 Cooling System Pressure Cap to Filler Neck

1 - OVERFLOW NIPPLE
2 - MAIN SPRING
3 - GASKET RETAINER
4 - STAINLESS-STEEL SWIVEL TOP
5 - RUBBER SEALS
6 - VENT VALVE
7 - COOLANT OUTLET CONNECTOR (2.0L/2.4L)/PRESSURE CONTAINER (2.7L)
8 - FILLER NECK

There is no need to remove the pressure cap at any time **except** for the following purposes:

- Check and adjust coolant freeze point
- Refill system with new coolant
- Conducting service procedures
- Checking for leaks

WARNING: IF VEHICLE HAS BEEN RUN RECENTLY, WAIT 15 MINUTES BEFORE REMOVING CAP. PLACE A SHOP TOWEL OVER THE CAP, AND WITHOUT PUSHING DOWN, ROTATE IT COUNTERCLOCKWISE TO THE FIRST STOP. ALLOW FLUIDS TO ESCAPE THROUGH THE OVERFLOW TUBE. WHEN THE SYSTEM STOPS PUSHING COOLANT AND STEAM INTO THE CRS TANK AND PRESSURE DROPS, PUSH DOWN ON THE CAP AND REMOVE IT COMPLETELY. SQUEEZING THE RADIATOR INLET HOSE WITH A SHOP TOWEL (TO CHECK PRESSURE) BEFORE AND AFTER TURNING TO THE FIRST STOP IS RECOMMENDED.

CLEANING

Use only a mild soap to clean the pressure cap.

INSPECTION

CAUTION: Vehicles equipped with 2.0L/2.4L engines use a different pressure cap than vehicles equipped with 2.7L engines. The pressure caps are NOT interchangeable. Verify proper pressure cap part number.

2.0L/2.4L

Hold the cap in your hand, **right side up** (Fig. 31). The vent valve at the bottom of the cap should fall open. Turn the cap upside down. The vent valve should close.

Replace the cap for any of the following conditions:

- Rubber gasket has swollen, preventing the valve from opening
- Any light can be seen between the vent valve and the rubber gasket (with cap upside down)
- Gasket on the bottom of the cap shows noticeable thinning
- Cap has been through more than one engine overheat.

2.7L

Hold the cap in your hand, **right side up** (Fig. 31). The vent valve at the bottom of the cap should be normally closed. The vent valve should open with a slight pull with your finger nail.

Replace the cap for any of the following conditions:

- Rubber gasket has swollen, preventing the valve from opening
- Any light can be seen between the vent valve and the rubber gasket. **Use only a replacement cap that has a spring to hold the vent shut.**
- Gasket on the bottom of the cap shows noticeable thinning
- Cap has been through more than one engine overheat.

PRESSURE CAP (Continued)

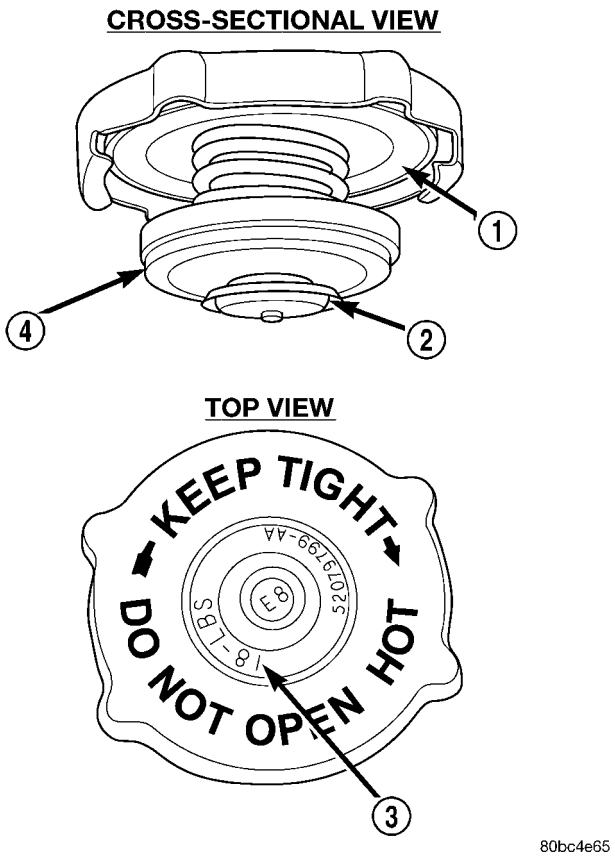

Fig. 31 Cooling System Pressure Cap - Typical

1 - FILLER NECK SEAL
2 - VACUUM VENT VALVE
3 - PRESSURE RATING
4 - PRESSURE VALVE

RADIATOR FAN(S)

DESCRIPTION

The radiator fan module includes a support shroud with two electrically driven motors with fan blades (Fig. 32). The radiator fan module is fastened to the radiator. The motors, shroud, and fan blades are serviced separately.

OPERATION

The radiator fans are controlled by the Powertrain Control Module (PCM) which energizes a high speed or low speed fan relay. The electric motor drives the cooling fan to produce air flow across the radiator fins.

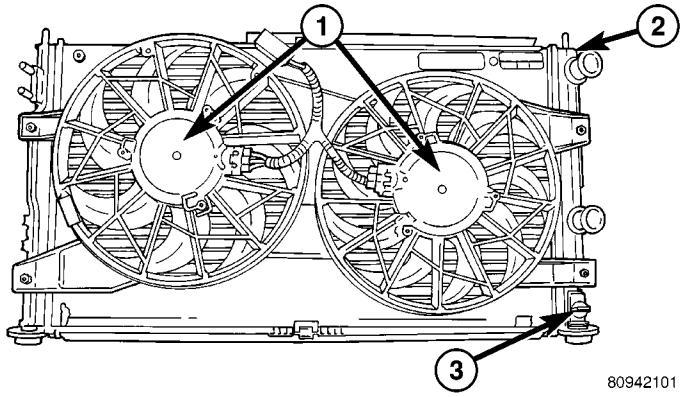

Fig. 32 Fan Module

1 - RADIATOR FAN MOTOR
2 - RADIATOR
3 - RADIATOR DRAINCOCK

DIAGNOSIS AND TESTING

DIAGNOSIS AND TESTING - RADIATOR FAN CONTROL

Fan control is accomplished three ways. The fan runs when the air conditioning pressure reaches a set psi see charts below. In addition to this control, the fan is turned on by the temperature of the coolant which is sensed by the coolant temperature sensor which sends the message to the Powertrain Control Module (PCM). The PCM turns on the fan through a fan relay. On models equipped with automatic transmission, a transmission fluid thermister may have some influences on fan operation. See Wiring Diagrams Manual for circuity and diagnostics provided.

The Powertrain Control Module (PCM) provides fan control for the following conditions:

- The fan will not run during cranking until the engine starts no matter what the coolant temperature is.
- Fan will run when the air conditioning clutch is engaged, low pressure cutout switch is closed and once set compressor head pressure is reached. See charts.
- Fan will run according to the following information charts.

RADIATOR FAN(S) (Continued)

RADIATOR FAN OPERATION—2.0L ENGINE

Radiator Fan Control			A/C Pressure	
A/C Off	**Low**	**High**		
Fan On:	104°C (220°F)	110°C (230°F)		
Fan Off:	99°C (210°F)	104°C (220°F)		
A/C On	**Low**	**High**	**Low**	**High**
Fan On:	99°C (210°F)	110°C (230°F)	1,466 Kpa (209 psi)	1,717 Kpa (249 psi)
Fan Off:	93°C (200°F)	104°C (220°F)	1,172 Kpa (170 psi)	1,579 Kpa (229 psi)
EATX Fluid Temperature			**Low Speed**	**High Speed**
Fan On:			109°C (228°F)	111°C (232°F)
Fan Off:			104°C (220°F)	109°C (228°F)

RADIATOR FAN OPERATION—2.4L ENGINE

Radiator Fan Control			A/C Pressure	
A/C Off	**Low**	**High**		
Fan On:	104°C (219°F)	110°C (230°F)		
Fan Off:	99°C (210°F)	105°C (221°F)		
A/C On	**Low**	**High**	**Low**	**High**
Fan On:	99°C (210°F)	110°C (230°F)	1,448 Kpa (210 psi)	1,718 Kpa (249 psi)
Fan Off:	93°C (199°F)	105°C (221°F)	1,207 Kpa (175 Psi)	1,585 Kpa (229 Psi)
EATX Fluid Temperature			**Low Speed**	**High Speed**
Fan On:			109°C (228°F)	111°C (232°F)
Fan Off:			104°C (220°F)	109°C (228°F)

RADIATOR FAN OPERATION—2.7L ENGINE

Radiator Fan Control			A/C Pressure	
A/C Off	**Low**	**High**		
Fan On:	104°C (220°F)	110°C (230°F)		
Fan Off:	98°C (208°F)	105°C (221°F)		
A/C On	**Low**	**High**	**Low**	**High**
Fan On:	99°C (210°F)	110°C (230°F)	1,448 Kpa (210 psi)	1,718 Kpa (249 psi)
Fan Off:	93°C (199°F)	105°C (221°F)	1,207 Kpa (175 psi)	1,585 kpa (229 psi)
EATX Fluid Temperature			**Low Speed**	**High Speed**
Fan On:			109°C (228°F)	111°C (232°F)
Fan Off:			104°C (220°F)	109°C (228°F)

DIAGNOSIS AND TESTING - ELECTRIC FAN MOTOR TEST

Refer to the appropriate Diagnostic Information for testing the fan motor with the DRBIII®.

For wiring diagrams of the fan motor systems refer to Wiring Diagrams.

REMOVAL

(1) Remove upper radiator crossmember.

(2) Disconnect radiator fan electrical connector (Fig. 33).

(3) Remove fasteners and upper clip attaching fan assembly to radiator (Fig. 33).

(4) Remove radiator fan assembly by lifting upward.

INSPECTION

There are no repairs to be made to the fan. If the fan is warped, cracked, or otherwise damaged, it must be replaced with **only** the recommended replacement part for adequate strength, performance and safety.

RADIATOR FAN(S) (Continued)

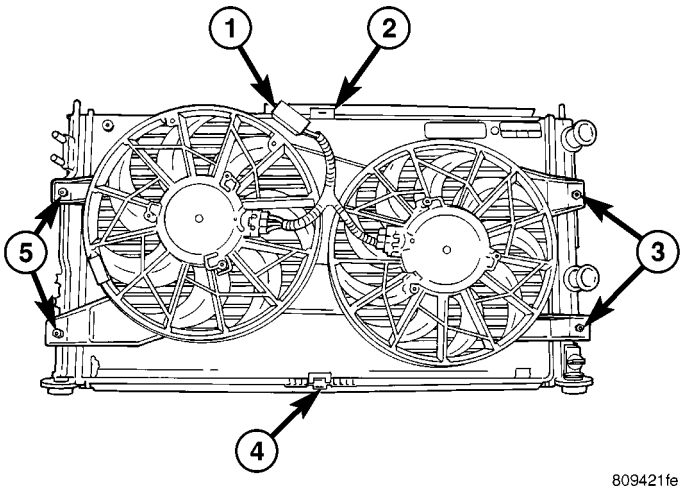

Fig. 33 RADIATOR FAN

1 - FAN MOTOR ELECTRICAL CONNECTOR
2 - CLIP - UPPER ATTACHING
3 - SCREWS - RIGHT SIDE
4 - CLIP - LOWER RETAINING (REMAINS ON RADIATOR)
5 - SCREWS - LEFT SIDE

INSTALLATION

(1) Install radiator fan to radiator. Install retaining clip and tighten fasteners to 5 N·m (45 in. lbs.) (Fig. 33).

(2) Connect radiator fan electrical connector.

(3) Install upper radiator crossmember.

THERMOSTAT HOUSING

REMOVAL

REMOVAL - 2.0L

(1) Disconnect negative battery cable.

(2) Partially drain cooling system below thermostat housing level.

(3) Remove accessory drive belt (Refer to 7 - COOLING/ACCESSORY DRIVE/DRIVE BELTS - REMOVAL).

(4) Disconnect and remove generator.

(5) Remove thermostat (Refer to 7 - COOLING/ENGINE/ENGINE COOLANT THERMOSTAT - REMOVAL).

(6) Disconnect engine coolant temperature sensor connector.

(7) Disconnect heater supply hose.

(8) Remove housing attaching bolts (Fig. 34).

(9) Remove housing and gasket (Fig. 34).

REMOVAL - 2.4L

(1) Partially drain cooling system below thermostat housing level.

(2) Remove thermostat (Refer to 7 - COOLING/ENGINE/ENGINE COOLANT THERMOSTAT - REMOVAL).

(3) Disconnect engine coolant temperature sensor connector.

(4) Disconnect heater supply hose.

(5) Remove housing attaching bolts (Fig. 34).

(6) Remove housing and gasket (Fig. 34).

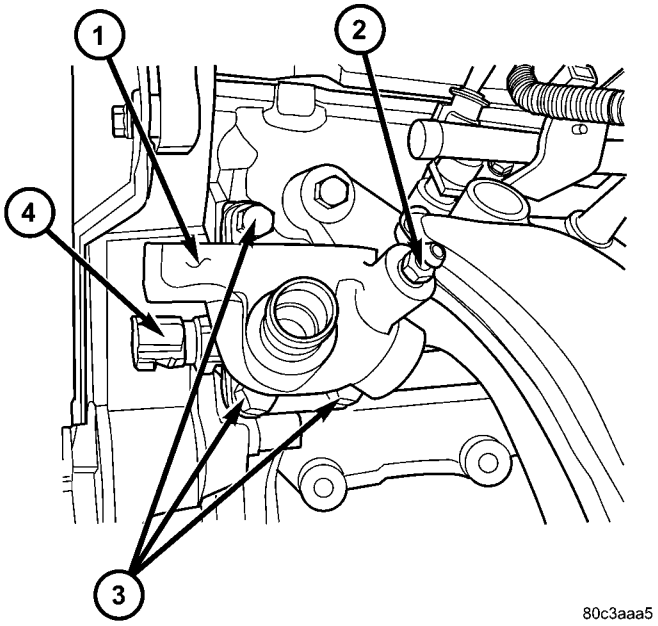

Fig. 34 Thermostat Housing

1 - THERMOSTAT HOUSING
2 - COOLING SYSTEM BLEED VALVE
3 - BOLTS
4 - ENGINE COOLANT TEMPERATURE SENSOR

INSTALLATION

INSTALLATION - 2.0L

(1) Clean all gasket sealing surfaces.

(2) Install gasket and housing (Fig. 34). Tighten bolts to 28 N·m (20 ft. lbs.).

(3) Reconnect heater supply hose.

(4) Reconnect engine coolant temperature sensor connector.

(5) Install thermostat (Refer to 7 - COOLING/ENGINE/ENGINE COOLANT THERMOSTAT - INSTALLATION).

(6) Install generator. Reconnect generator connectors.

(7) Install accessory drive belt (Refer to 7 - COOLING/ACCESSORY DRIVE/DRIVE BELTS - INSTALLATION).

(8) Fill cooling system (Refer to 7 - COOLING/ENGINE - STANDARD PROCEDURE).

(9) Connect negative battery cable.

THERMOSTAT HOUSING (Continued)

INSTALLATION - 2.4L

(1) Clean all gasket sealing surfaces.

(2) Install gasket and housing (Fig. 34). Tighten bolts to 28 N·m (20 ft. lbs.).

(3) Reconnect heater supply hose.

(4) Reconnect engine coolant temperature sensor connector.

(5) Install thermostat (Refer to 7 - COOLING/ENGINE/ENGINE COOLANT THERMOSTAT - INSTALLATION).

(6) Fill cooling system (Refer to 7 - COOLING/ENGINE - STANDARD PROCEDURE).

WATER PUMP

DESCRIPTION

DESCRIPTION - 2.0L/2.4L

The water pump has a diecast aluminum body and housing with a stamped steel impeller. The water pump bolts directly to the block (Fig. 35) and is driven by the timing belt. Cylinder block to water pump sealing is provided by a rubber O-ring.

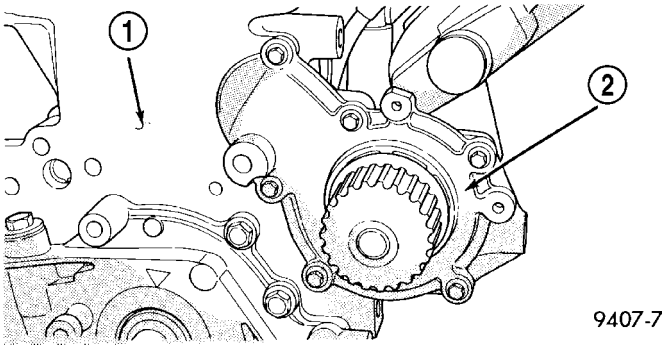

Fig. 35 Water Pump - 2.0L/2.4L

1 - CYLINDER BLOCK
2 - PUMP BODY

DESCRIPTION - 2.7L

The 2.7L pump has a die cast aluminum housing and a plastic swept vane impeller. It bolts directly to the cylinder block, behind the timing chain cover (Fig. 36). The water pump is driven by the back side of the engine's primary timing chain.

DIAGNOSIS AND TESTING - WATER PUMP

To determine whether coolant is flowing through the cooling system, use one of the following procedures:

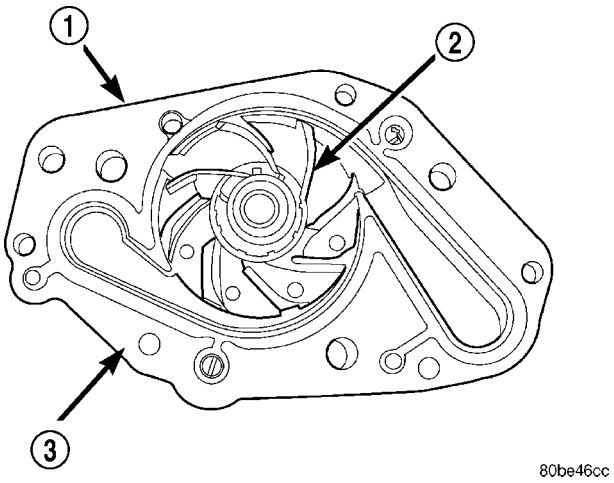

Fig. 36 Water Pump—2.7L Engine

1 - WATER PUMP BODY
2 - IMPELLER
3 - GASKET

PREFERRED METHOD

WARNING: DO NOT REMOVE THE COOLING SYSTEM PRESSURE CAP OR ANY HOSE WITH THE SYSTEM HOT AND UNDER PRESSURE BECAUSE SERIOUS BURNS FROM COOLANT CAN OCCUR.

- **2.0L/2.4L:** Remove pressure cap when engine is cold. Remove small amount of coolant. Idle engine until thermostat opens. You should observe coolant flow while looking down the filler neck. Once flow is detected install the pressure cap. Replace removed coolant into coolant recovery container.
- **2.7L:** Start engine, coolant flow should be observable in coolant pressure container when revving the engine.

ALTERNATIVE METHOD

- If engine is cold, idle engine until normal operating temperature is reached. Feel the upper radiator hose. If it is hot, coolant is circulating.

WATER PUMP (Continued)

REMOVAL

REMOVAL - 2.0L/2.4L

(1) Disconnect negative battery cable.

(2) Drain cooling system (Refer to 7 - COOLING/ENGINE - STANDARD PROCEDURE).

(3) Remove timing belt, camshaft sprockets, and rear timing belt cover (Refer to 9 - ENGINE/VALVE TIMING/TIMING BELT/CHAIN AND SPROCKETS - REMOVAL).

(4) Remove water pump to engine attaching screws (Fig. 37).

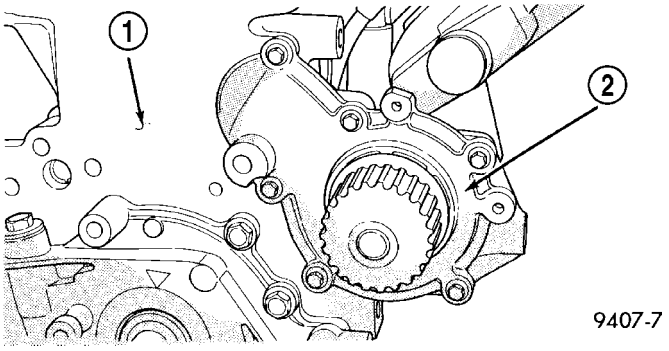

Fig. 37 Water Pump

1 - CYLINDER BLOCK
2 - PUMP BODY

REMOVAL - 2.7L

NOTE: It is normal for the water pump to weep a small amount of coolant from the primary weep hole (black stain at weep passage). Do not replace the water pump if this condition exists. Replace the water pump if a heavy deposit or a steady flow of engine coolant is evident from the primary weep passage (Fig. 39) and (Fig. 40). This indicates a shaft seal failure and pump must be replaced. Coolant may leak from the secondary weep passage and fill the valley of the engine (Fig. 39) and (Fig. 41). If this condition is found, clean the primary weep passage of debris. Be sure to perform a thorough analysis before replacing water pump.

WARNING: DO NOT REMOVE PRESSURE CAP WITH THE SYSTEM HOT AND PRESSURIZED. SERIOUS BURNS FROM COOLANT CAN RESULT.

(1) Disconnect negative battery cable.

(2) Drain cooling system (Refer to 7 - COOLING/ENGINE - STANDARD PROCEDURE).

NOTE: The water pump is driven by the primary timing chain.

(3) Remove the timing chain cover, timing chain, and all chain guides (Refer to 9 - ENGINE/VALVE TIMING/TIMING BELT/CHAIN AND SPROCKETS - REMOVAL).

(4) Remove bolts attaching water pump to block (Fig. 38).

(5) Remove water pump and gasket.

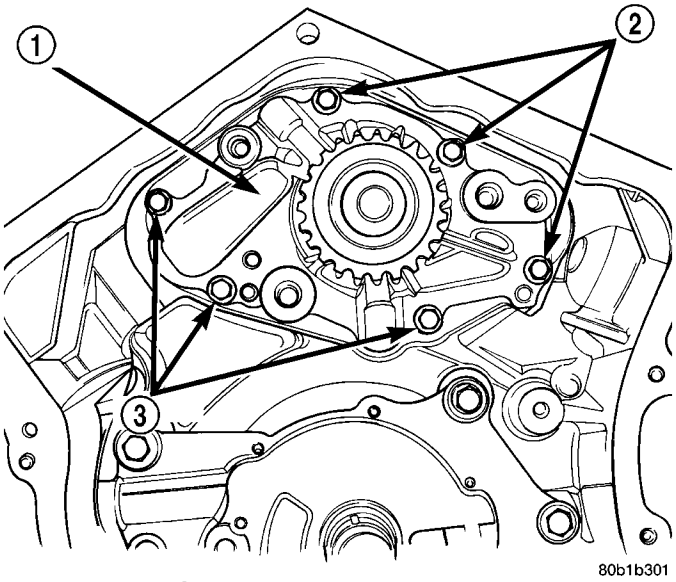

Fig. 38 WATER PUMP - 2.7L

1 - WATER PUMP
2 - BOLTS
3 - BOLTS

CLEANING

Clean gasket mating surfaces as necessary.

INSPECTION

INSPECTION - 2.0L/2.4L

Replace water pump body assembly if it has any of these defects:

(1) Cracks or damage on the body.

(2) Coolant leaks from the shaft seal, evident by wet coolant traces on the pump body.

(3) Loose or rough turning bearing.

(4) Impeller rubs either the pump body or the engine block.

(5) Impeller loose or damaged.

(6) Sprocket or sprocket flange loose or damaged.

INSPECTION - 2.7L

Inspect and replace the water pump if it has any of the following defects:

(1) Damage or cracks on the pump body.

(2) Coolant leaks: If the shaft seal is leaking, this will be evident by traces of thick deposits of dried glycol running down from the pump primary weep passage (Fig. 39) and (Fig. 40). A thin black stain

WATER PUMP (Continued)

below the pump primary weep hole/passage is considered normal operation.

(3) Coolant leaks: If the pump primary weep passage is plugged, coolant may come from the secondary weep passage and collect in the valley of the engine. The coolant will eventually run out the back side of the engine (Fig. 39) and (Fig. 41). Leakage from the secondary weep passage may give false indications that core plug(s) may be leaking on the back side of the engine block. If this condition is found, clean the primary weep passage of debris.

(4) Impeller rubs inside of cylinder block.

(5) Excessively loose or rough turning bearing.

NOTE: It is normal for the water pump to weep a small amount of coolant from the primary weep hole (black stain at weep passage). Do not replace the water pump if this condition exists. Replace the water pump if a heavy deposit or a steady flow of engine coolant is evident from the primary weep passage (Fig. 39) and (Fig. 40). This indicates a shaft seal failure and pump must be replaced. Coolant may leak from the secondary weep passage and fill the valley of the engine (Fig. 39) and (Fig. 41). If this condition is found, clean the primary weep passage of debris. Be sure to perform a thorough analysis before replacing water pump.

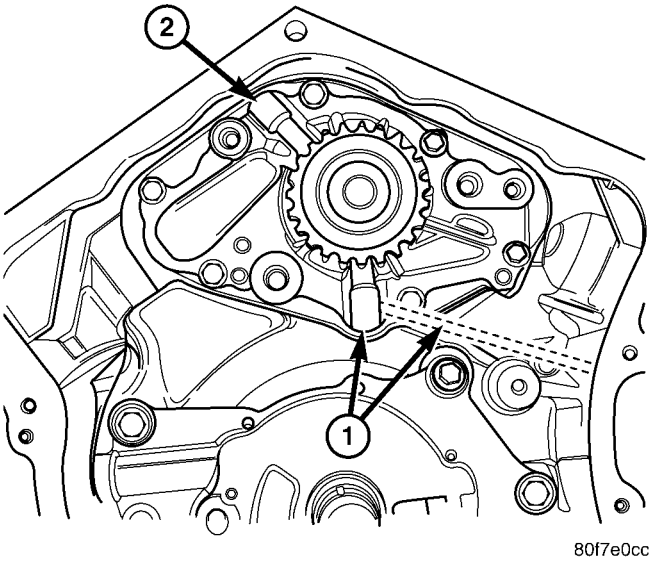

Fig. 39 Water Pump Weep Passages - 2.7L

1 - PRIMARY WEEP PASSAGE
2 - SECONDARY WEEP PASSAGE

INSTALLATION

INSTALLATION - 2.0L/2.4L

(1) Install new O-ring gasket in water pump body O-ring groove (Fig. 42).

CAUTION: Make sure O-ring is properly seated in water pump groove before tightening screws. An improperly located O-ring may cause damage to the O-ring and cause a coolant leak.

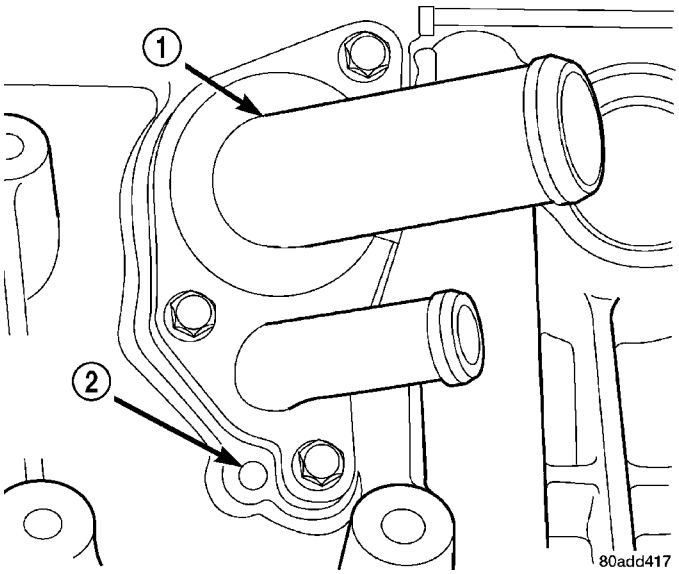

Fig. 40 Primary Water Pump Weep Passage - 2.7L

1 - THERMOSTAT HOUSING/COOLANT INLET
2 - WATER PUMP WEEP PASSAGE

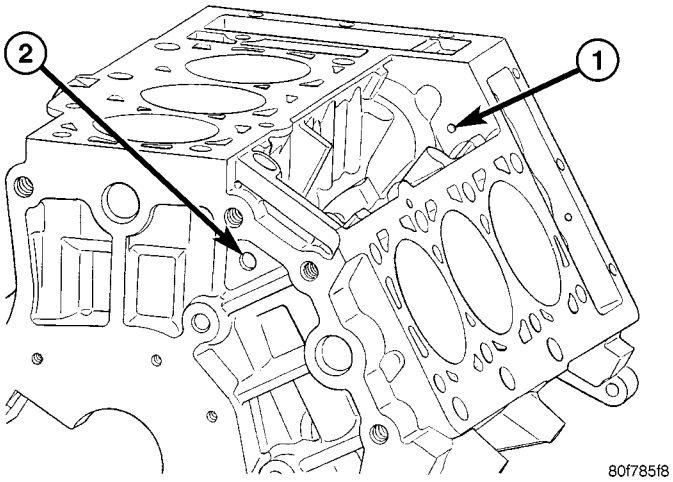

Fig. 41 Secondary Water Pump Weep Passage - 2.7L

1 - WEEP PASSAGE TO VALLEY OF BLOCK
2 - HOLE IN REAR OF BLOCK

(2) Assemble pump body to block and tighten screws to 12 N·m (105 in. lbs.) (Fig. 37).

(3) Rotate pump by hand to check for freedom of movement.

(4) Install rear timing belt cover, camshaft sprockets, and timing belt (Refer to 9 - ENGINE/VALVE TIMING/TIMING BELT/CHAIN AND SPROCKETS - INSTALLATION).

(5) Fill cooling system (Refer to 7 - COOLING/ENGINE - STANDARD PROCEDURE).

WATER PUMP (Continued)

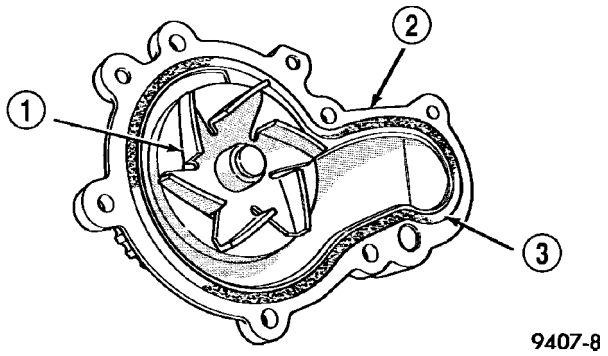

Fig. 42 Water Pump Body

1 - IMPELLER
2 - PUMP BODY
3 - O-RING

INSTALLATION - 2.7L

(1) Clean all sealing surfaces.

(2) Install water pump and gasket. Tighten mounting bolts to 12 N·m (105 in. lbs.).

(3) Install timing chain guides, timing chain, and timing chain cover (Refer to 9 - ENGINE/VALVE TIMING/TIMING BELT/CHAIN AND SPROCKETS - INSTALLATION).

(4) Reconnect negative battery cable.

(5) Fill cooling system (Refer to 7 - COOLING/ENGINE - STANDARD PROCEDURE).

WATER PUMP INLET TUBE

REMOVAL

REMOVAL - 2.0L

(1) Drain cooling system (Refer to 7 - COOLING/ENGINE - STANDARD PROCEDURE).

(2) Raise vehicle on hoist.

(3) Remove Air Conditioning Compressor/Generator accessory drive belt (Refer to 7 - COOLING/ACCESSORY DRIVE/DRIVE BELTS - REMOVAL).

(4) Disconnect and remove generator.

(5) Remove generator bracket.

(6) Disconnect lower radiator hose and heater hose from the inlet tube (Fig. 43).

(7) Remove fasteners that hold the inlet tube to the block.

(8) Rotate inlet tube while removing from the engine block (Fig. 43).

REMOVAL - 2.4L

(1) Drain cooling system (Refer to 7 - COOLING/ENGINE - STANDARD PROCEDURE).

(2) Raise vehicle on hoist.

(3) Disconnect lower radiator hose and heater hose from the inlet tube (Fig. 43).

(4) Remove fasteners that hold the inlet tube to the block.

(5) Rotate inlet tube while removing from the engine block (Fig. 43).

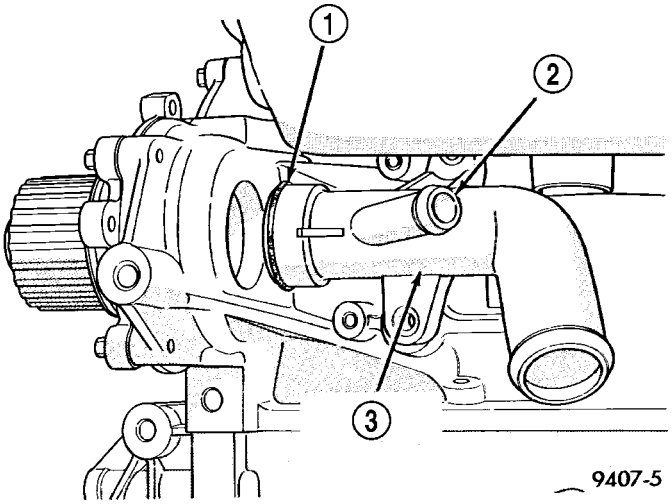

Fig. 43 Water Pump Inlet Tube - Typical

1 - O-RING
2 - TO HEATER
3 - WATER PUMP INLET TUBE

INSTALLATION

INSTALLATION - 2.0L

(1) Inspect the O-ring for damage before installing the tube into the cylinder block (Fig. 43).

(2) Lube O-ring with coolant and install tube into the cylinder block opening.

(3) Install fasteners and tighten to 12 N·m (105 in. lbs.).

(4) Reconnect lower radiator hose and heater hose to inlet tube (Fig. 43).

(5) Install generator bracket.

(6) Install generator, reconnect connectors.

(7) Install Air Conditioning Compressor/Generator accessory drive belt (Refer to 7 - COOLING/ACCESSORY DRIVE/DRIVE BELTS - INSTALLATION).

(8) Lower vehicle.

(9) Fill cooling system (Refer to 7 - COOLING/ENGINE - STANDARD PROCEDURE).

INSTALLATION - 2.4L

(1) Inspect the O-ring for damage before installing the tube into the cylinder block (Fig. 43).

(2) Lube O-ring with coolant and install tube into the cylinder block opening.

(3) Install fasteners and tighten to 12 N·m (105 in. lbs.).

(4) Reconnect lower radiator hose and heater hose to inlet tube (Fig. 43).

(5) Lower vehicle.

(6) Fill cooling system (Refer to 7 - COOLING/ENGINE - STANDARD PROCEDURE).

TRANSMISSION

TABLE OF CONTENTS

	page
TRANSMISSION COOLER HOSES	
DESCRIPTION	46
TRANSMISSION OIL COOLER	
DESCRIPTION	46
OPERATION	46
REMOVAL	46
CLEANING	46
INSPECTION	46
INSTALLATION	46

TRANSMISSION COOLER HOSES

DESCRIPTION

The transmission oil cooling circuit uses special aggressive fittings for the transmission oil cooler hoses. Whenever a transmission oil cooler hose is removed from a transmission fitting (at transmission), it must be cut off flush with the fitting, and a service splice kit must be used upon reassembly. Refer to instructions provided with splice kit. Whenever a transmission oil cooler hose is removed from a transmission oil cooler tube (at transmission oil cooler), it must be replaced with a new hose. Removing the hose from the aggressive fitting will scrape material from inside the hose making the hose larger. Failure to replace the hose or install a service splice kit will result in transmission oil leaks.

When hose clamp replacement is necessary, replace with the same type of hose clamp. Always use proper hose clamp pliers on clamps. Use of improper hose clamp pliers may bend hose clamps out-of-round resulting in transmission oil leaks.

TRANSMISSION OIL COOLER

DESCRIPTION

An external oil-to-air type automatic transmission oil cooler is mounted to the front of the radiator and is integral to the A/C condenser (Fig. 1). The six upper tubes are used for transaxle oil cooling, and the remaining tubes below are for the A/C system.

The cooler uses tubes and rubber hoses to feed oil to and from the automatic transaxle. The replaceable inlet and outlet tubes use an O-ring for sealing. The trans oil cooler is replaced with the A/C condenser.

OPERATION

The oil flows from the transmission to the oil-to-air cooler. Heat is then transferred into the air.

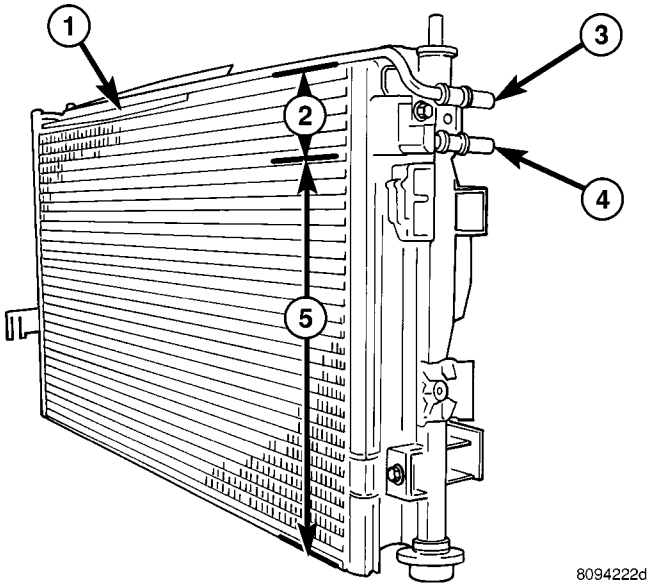

Fig. 1 Transmission Oil Cooler

1 - AIR CONDITIONING CONDENSER/TRANSMISSION OIL COOLER
2 - TRANSMISSION OIL COOLER PORTION
3 - TRANSMISSION COOLER OUTLET
4 - TRANSMISSION COOLER INLET
5 - AIR CONDITIONING CONDENSER PORTION

REMOVAL

(1) Remove AC condenser(Refer to 24 - HEATING & AIR CONDITIONING/PLUMBING/A/C CONDENSER - REMOVAL).

CLEANING

Check the AC condenser for debris on the cooling fin surfaces. Clean as necessary.

INSPECTION

Inspect all hoses, tubes, clamps and connections for leaks, cracks, or damage. Replace as necessary. Use only approved transmission oil cooler hoses that are molded to fit the space available.

INSTALLATION

(1) Install AC condenser(Refer to 24 - HEATING & AIR CONDITIONING/PLUMBING/A/C CONDENSER - INSTALLATION).

AUDIO/VIDEO

TABLE OF CONTENTS

page

AUDIO
DESCRIPTION 1
OPERATION 1
DIAGNOSIS AND TESTING - AUDIO 2
AMPLIFIER
DESCRIPTION 4
OPERATION 4
REMOVAL 4
INSTALLATION 4
ANTENNA BODY & CABLE
DIAGNOSIS AND TESTING - ANTENNA BODY AND CABLE 4
REMOVAL 6
INSTALLATION 6
CD CHANGER
DESCRIPTION 6
OPERATION 6
REMOVAL 6
INSTALLATION 6
POWER ANTENNA - EXPORT
DIAGNOSIS AND TESTING - POWER ANTENNA - EXPORT 7
REMOVAL 7
INSTALLATION 7
REMOTE SWITCHES
DESCRIPTION 7
OPERATION 8
DIAGNOSIS AND TESTING - REMOTE SWITCHES 8
REMOVAL 9
INSTALLATION 9
RADIO
DESCRIPTION 10
OPERATION 10
REMOVAL 10
INSTALLATION 10
SPEAKER
DESCRIPTION 11
OPERATION 11
DIAGNOSIS AND TESTING - SPEAKER 11
REMOVAL 12
INSTALLATION 13

AUDIO

DESCRIPTION

Several combinations of radio receivers and speaker systems are offered. The audio system uses an ignition switched source of battery current so that the system will only operate when the ignition switch is in the RUN or ACCESSORY positions.

The audio system includes the following components:

- Antenna
- Power amplifier (with premium speaker system only)
- Radio noise suppression components
- Radio receiver
- Remote radio switches (if equipped)
- Speakers

Certain functions and features of the audio system rely upon resources shared with other electronic modules in the vehicle over the Programmable Communication Interface (PCI) bus network. The data bus network allows the sharing of sensor information. For diagnosis of these electronic modules or of the data bus network, the use of a DRB III® scan tool and the proper Diagnostic Procedures manual are recommended.

Refer to the appropriate wiring information for complete standard and premium audio system circuit diagrams. The wiring information includes proper wire and connector repair procedures, further details on wire harness routing and retention, as well as pin-out and location views for the various wire harness connectors, splices, and grounds.

OPERATION

The audio system components are designed to provide audio entertainment and information through the reception, tuning and amplification of locally broadcast radio signals in both the Amplitude Modulating (AM) and Frequency Modulating (FM) commercial frequency ranges.

The audio system components operate on battery current received through a fuse in the Power Distribution Center (PDC) on a fused ignition switch output (run-acc) circuit so that the system will only operate when the ignition switch is in the Run or Accessory positions.

Refer to the owner's manual for more information on the features, use and operation of each of the available audio systems.

AUDIO (Continued)

DIAGNOSIS AND TESTING - AUDIO

Any diagnosis of the Audio system should begin with the use of the DRB III® diagnostic tool. For information on the use of the DRB III®, refer to the appropriate Diagnostic Service Manual.

Refer to the appropriate wiring information. The wiring information includes wiring diagrams, proper wire and connector repair procedures, details of wire harness routing and retention, connector pin-out information and location views for the various wire harness connectors, splices and grounds.

WARNING: DISABLE THE AIRBAG SYSTEM BEFORE ATTEMPTING ANY STEERING WHEEL, STEERING COLUMN, SEAT BELT TENSIONER, SIDE AIRBAG, OR INSTRUMENT PANEL COMPONENT DIAGNOSIS OR SERVICE. DISCONNECT AND ISOLATE THE BATTERY NEGATIVE (GROUND) CABLE, THEN WAIT TWO MINUTES FOR THE AIRBAG SYSTEM CAPACITOR TO DISCHARGE BEFORE PERFORMING FURTHER DIAGNOSIS OR SERVICE. THIS IS THE ONLY SURE WAY TO DISABLE THE AIRBAG SYSTEM. FAILURE TO TAKE THE PROPER PRECAUTIONS COULD RESULT IN ACCIDENTAL AIRBAG DEPLOYMENT AND POSSIBLE PERSONAL INJURY.

AUDIO SYSTEM DIAGNOSIS

CONDITION	POSSIBLE CAUSES	CORRECTION
NO AUDIO AT ALL SPEAKERS - RADIO DISPLAY AND CONTROLS ARE OPERATIONAL	1. Amplifier fuse faulty, if equipped.	1. Check and replace fuses, if required.
	2. Radio faulty.	2. Refer to appropriate Diagnostic Service Manual.
	3. Wiring to amplifier faulty, if equipped.	3. Verify radio on/off input to amplifier and verify battery and ground connections. Repair wiring as necessary.
	4. Amplifier faulty, if equipped.	4. Replace amplifier.
NO AUDIO AT SOME SPEAKERS - RADIO DISPLAY AND CONTROLS ARE OPERATIONAL	1. Radio faulty.	1. Refer to appropriate Diagnostic Service Manual.
	2. Speaker(s) faulty.	2. Refer to speaker diagnostics.
	3. Wiring faulty between radio and speaker.	3. Check wiring for open or short, repair wiring as necessary.
	4. Wiring faulty between radio and amplifier.	4. Refer to speaker diagnostics. Repair wiring as necessary.
	5. Wiring faulty between amplifier and speaker.	5. Wiring faulty between amplifier and speaker.
	6. Amplifier faulty.	6. Replace amplifier.
POOR AUDIO AT ALL SPEAKERS - RADIO DISPLAY AND CONTROLS ARE OPERATIONAL	1. Radio faulty.	1. Refer to appropriate Diagnostic Service Manual.
	2. Power/ground wiring open or shorted.	2. Repair wiring as necessary.
	3. Amplifier faulty.	3. Replace amplifier.
	4. Power/ground wiring to amplifier open or shorted.	4. Repair wiring as necessary.

AUDIO (Continued)

CONDITION	POSSIBLE CAUSES	CORRECTION
POOR AUDIO AT SOME SPEAKERS - RADIO DISPLAY AND CONTROLS ARE OPERATIONAL	1. Radio faulty.	1. Refer to appropriate Diagnostic Service Manual.
	2. Speakers faulty.	2. Refer to speaker diagnostics.
	3. Wiring faulty between radio and speaker.	3. Check wiring for open or short, repair wiring as necessary.
	4. Wiring faulty between radio and amplifier.	4. Refer to speaker diagnostics. Repair wiring as necessary.
	5. Wiring faulty between amplifier and speaker.	5. Wiring faulty between amplifier and speaker.
	6. Amplifier faulty.	6. Replace amplifier.
SPEAKER BASS DISTORTION (″BUZZING″)	1. Trim panel near speaker contacting speaker or installed incorrectly.	1. Ensure that trim pane l is installed correctly.
NO RADIO DISPLAY - AUDIO AND CONTROLS ARE OPERATIONAL	1. Radio faulty.	1. Refer to appropriate Diagnostic Service Manual.
NO RADIO DISPLAY - AUDIO AND CONTROLS ARE NOT OPERATIONAL	1. Fuse faulty.	1. Check radio fuse and Ignition-Off Draw (IOD) fuse in Junction Block (JB). Replace fuses, if required.
	2. Radio connector faulty.	2. Check for loose or corroded radio connector. Repair, if required.
CLOCK WILL NOT KEEP SET TIME	1. Fuse faulty.	1. Check Ignition-Off Draw (IOD) fuse in the Junction Block (JB). Replace fuse, if required.
	2. Radio connector faulty.	2. Check for loose or corroded radio connector. Repair, if required.
	3. Wiring faulty.	3. Check for battery voltage at radio connector. Repair wiring, if required.
	4. Radio faulty.	4. Refer to appropriate Diagnostic Service Manual.
POOR RADIO RECEPTION WITH KEY IN ACCESSORY OR IGNITION ON POSTION	1. Antenna faulty.	1. (Refer to 8 - ELECTRICAL/AUDIO/ANTENNA BODY & CABLE - DIAGNOSIS AND TESTING).
	2. Radio ground faulty.	2. Check for continuity between radio chassis and a known good ground. There should be continuity. Repair ground, if required.
	3. Radio noise suppression faulty.	3. Repair or replace ground strap as necessary.
	4. Radio faulty.	4. Refer to appropriate Diagnostic Service Manual.
NO/POOR TAPE OPERATION	1. Faulty tape.	1. Insert known good tape and test operation.
	2. Foreign objects behind tape door.	2. Remove foreign objects and test operation.
	3. Dirty cassette tape head.	3. Clean head with Mopar Cassette Head Cleaner.
	4. Faulty tape deck.	4. Exchange or replace radio, if required.

AUDIO (Continued)

CONDITION	POSSIBLE CAUSES	CORRECTION
NO COMPACT DISC OPERATION	1. Faulty CD.	1. Insert known good CD and test operation.
	2. Foreign material on CD.	2. Clean CD and test operation.
	3. Condensation on CD or optics.	3. Allow temperature of vehicle interior to stabilize and test operation.
	4. Faulty CD player.	4. Refer to appropriate Diagnostic Service Manual.

AMPLIFIER

DESCRIPTION

The optional premium speaker system includes a separate audio power amplifier. The amplifier is a four channel unit and is rated at 120 (RCC sales code) or a six channel rated at 150 (RCK sales code) total output watts. The amplifier is located below the front passenger seat.

OPERATION

The power amplifier electronically increases the frequency response of the normal audio signal output from the radio amplifier in order to improve the acoustic performance of the speakers. On vehicles equipped with an amplifier, the amplifier section of the radio becomes a pre-amplifier.

The amplifier receives audio signal inputs for speaker channels from the radio, then sends amplified audio outputs through six separate channels with dedicated feed and return circuits to the individual speakers.

REMOVAL

(1) Disconnect and isolate the battery negative cable.

(2) Remove the retaining fasteners. Adjust or remove the seat as necessary to gain access.

(3) Disconnect the wire harness connector.

(4) Remove the amplifier.

INSTALLATION

(1) Connect wire harness connector to amplifier.

(2) Install amplifier. Tighten the forward screw to 3 N·m (26.5 in. lbs.) and the rear nut to 2 N·m (18 in. lbs.).

(3) Connect battery negative cable.

ANTENNA BODY & CABLE

DIAGNOSIS AND TESTING - ANTENNA BODY AND CABLE

The following four tests are used to diagnose the antenna with an ohmmeter:

- **Test 1** - Coax cable at back of radio to ground test
- **Test 2** - Tip-of-mast to tip-of-conductor test
- **Test 3** - Body ground to battery ground test
- **Test 4** - Body ground to antenna coaxial cable shield test.

WARNING: DISABLE THE AIRBAG SYSTEM BEFORE ATTEMPTING ANY STEERING WHEEL, STEERING COLUMN, SEAT BELT TENSIONER, SIDE AIRBAG, OR INSTRUMENT PANEL COMPONENT DIAGNOSIS OR SERVICE. DISCONNECT AND ISOLATE THE BATTERY NEGATIVE (GROUND) CABLE, THEN WAIT TWO MINUTES FOR THE AIRBAG SYSTEM CAPACITOR TO DISCHARGE BEFORE PERFORMING FURTHER DIAGNOSIS OR SERVICE. THIS IS THE ONLY SURE WAY TO DISABLE THE AIRBAG SYSTEM. FAILURE TO TAKE THE PROPER PRECAUTIONS COULD RESULT IN ACCIDENTAL AIRBAG DEPLOYMENT AND POSSIBLE PERSONAL INJURY.

The ohmmeter test lead connections for each test are shown in the illustration (Fig. 1).

NOTE: This model has a two-piece antenna coaxial cable. Tests 2 and 4 must be conducted in two steps to isolate an antenna cable problem. First, test the primary antenna cable (integral to the body wiring) from the coaxial cable connector just in front of the front seat crossmember of the passenger seat to the antenna body. Then, test the secondary antenna cable (instrument panel antenna cable) from the coaxial cable connector just in front of the front seat crossmember of the passenger seat to the coaxial cable connector at the radio.

TEST 1

Test 1 checks the antenna conductor components for a short circuit. This test should be performed first on the entire antenna circuit, from the antenna mast to the center conductor of the coaxial cable connector at the radio. If a short circuit is detected, each of the three antenna conductor components (antenna mast, antenna body and primary cable unit, instrument panel antenna secondary cable) should be isolated

ANTENNA BODY & CABLE (Continued)

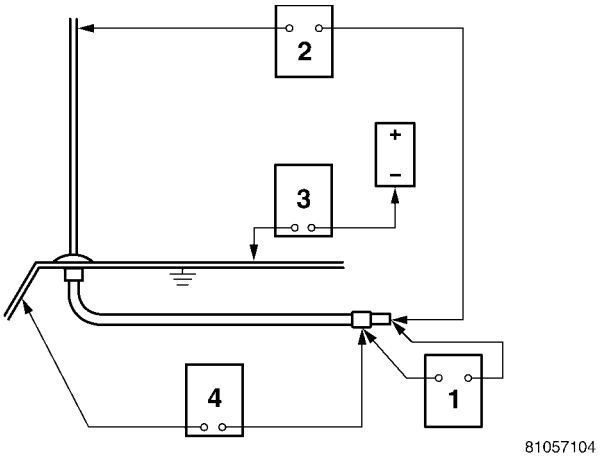

Fig. 1 ANTENNA TESTS - TYPICAL

and tested individually to locate the exact component that is the source of the short circuit. To begin this test, proceed as follows:

(1) Disconnect the instrument panel (secondary) antenna cable coaxial connector from the back of the radio.

(2) Touch one ohmmeter test lead to the shield ground of the coaxial cable. Touch the other test lead to the center conductor pin of the instrument panel antenna cable coaxial connector for the radio. Check the ohmmeter reading for continuity.

(3) There should be no continuity. The ohmmeter should register an open circuit. Low resistance indicates a damaged or shorted antenna conductor. If OK, go to Test 2. If not OK, isolate and test each of the individual antenna conductor components. Replace only the faulty antenna conductor component.

TEST 2

Remove antenna mast or unplug antenna cable to perform this test.

Test 2 checks the antenna conductor components for an open circuit. This test should be performed first on the entire antenna circuit, from the antenna mast to the center conductor of the coaxial cable connector at the radio. If an open circuit is detected, each of the three antenna conductor components (antenna mast, antenna body and primary cable unit, instrument panel antenna secondary cable) should be isolated and tested individually to locate the exact component that is the source of the open circuit. To begin this test, proceed as follows:

(1) Disconnect the instrument panel (secondary) antenna cable coaxial connector from the back of the radio.

(2) Touch one ohmmeter test lead to the tip of the antenna mast. Touch the other test lead to the center conductor pin of the instrument panel antenna cable coaxial connector for the radio. Check the ohmmeter reading for continuity.

(3) There should be continuity. The ohmmeter should register only a fraction of an ohm resistance. High or infinite resistance indicates a damaged or open antenna conductor. If OK, go to Test 3. If not OK, isolate and test each of the individual antenna conductor components. Replace only the faulty antenna conductor component.

TEST 3

Test 3 checks the condition of the vehicle body ground connection. To begin this test, proceed as follows:

(1) This test must be performed with the battery positive cable disconnected from the battery. Disconnect and isolate both battery cables, negative cable first.

(2) Reconnect the battery negative cable.

(3) Touch one ohmmeter test lead to a good clean ground point on the vehicle fender. Touch the other test lead to the battery negative terminal post. Check the ohmmeter reading for continuity.

(4) There should be continuity. The ohmmeter should register less than one ohm resistance. High or infinite resistance indicates a loose, corroded, or damaged connection between the battery negative terminal and the vehicle body. If OK, go to Test 4. If not OK, check the battery negative cable connection to the vehicle body and the radio noise suppression ground strap connections to the engine and the vehicle body for being loose or corroded. Clean or tighten these connections as required.

TEST 4

Test 4 checks the condition of the connection between the antenna coaxial cable shield and the vehicle body ground as follows:

(1) Disconnect and isolate the antenna coaxial cable connector just in front of the front seat crossmember of the passenger seat.

(2) Touch one ohmmeter test lead to a good clean ground point on the vehicle fender. Touch the other test lead to the outer crimp on the antenna coaxial cable connector just in front of the front seat crossmember of the passenger seat. Check the ohmmeter reading for continuity.

(3) There should be continuity. The ohmmeter should register less than one ohm resistance. High or infinite resistance indicates a loose, corroded, or damaged connection between the antenna body and the vehicle body or between the antenna body and the antenna coaxial cable shield. If not OK, clean the antenna body to fender mating surfaces and tighten the antenna cap nut to specifications.

ANTENNA BODY & CABLE (Continued)

(4) Check the resistance again with an ohmmeter. If the resistance is still more then one ohm, replace the faulty antenna body and cable.

REMOVAL

(1) Disconnect and isolate the battery negative cable.
(2) Pull the right side trunk liner aside.
(3) Remove antenna mast by unscrewing mast from antenna body.
(4) Remove screw from mounting bracket.
(5) Pull antenna body down through the rubber grommet.
(6) Unplug antenna lead from base of antenna body.

INSTALLATION

(1) Insert antenna lead to base of antenna body.
(2) Push antenna body up through the rubber grommet.
(3) Install screw into mounting bracket. Tighten screw to 12 N·m (106 in. lbs.).
(4) Install antenna mast. Tighten to 12 N·m (106 in. lbs.) **Ensure that the antenna mast is fully seated on antenna base and that there is no gap between the mast and base.**
(5) Install trunk liner.
(6) Connect battery negative cable.

CD CHANGER

DESCRIPTION

The In-Dash CD Changer (if equipped) is located in the instrument panel below the radio. The remote changer does not use a cartridge or magazine for the CD's. Up to 6 CD's can be directly loaded into this unit, one at a time.

OPERATION

Due to its compact design, the CD changer can carry out only one operation at a time. For example, you can not load a new disc while playing another at the same time. Each operation happens sequentially.

The radio unit provides control over all features of the CD changer with the exception of the CD load and eject functions, which are controlled by buttons located on the front of the CD changer. All features you would expect, such as Disc Up/Down, Track Up/Down, Random and Scan are controlled by the radio, which also displays all relevant CD changer information on the radio display.

On JR27 models, the CD changer will not operate with the ignition in the OFF position. With the ignition OFF, CD's can not be removed from the changer.

The CD changer contains a Load/Eject button and an indicator LED for each of the six disc positions as well as an illuminated disc opening. The individual LED indicates whether a CD is currently loaded. Pressing the Eject button will eject the disc presently selected. If the chamber is currently empty, actuating the Select button will position that chamber to receive and load a new disc in that chamber.

REMOVAL

(1) Disconnect and isolate the battery negative cable.
(2) Remove lower center trim bezel.
(3) Remove screws from radio.
(4) Remove screws from CD changer (Fig. 2).

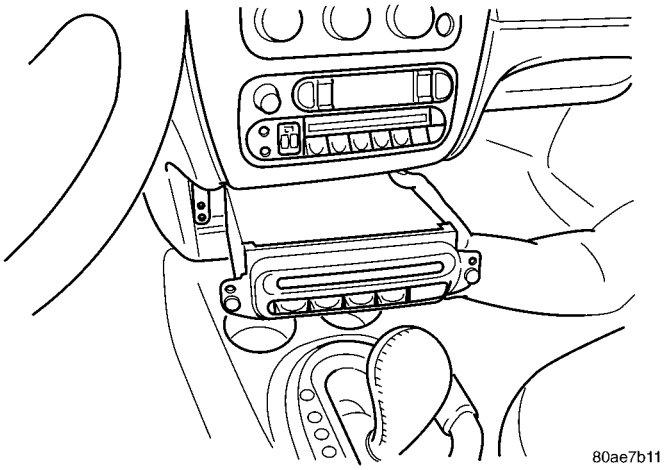

Fig. 2 CD CHANGER

(5) Remove CD changer from Instrument panel.
(6) Disconnect wire connector from CD changer.

INSTALLATION

(1) Connect wire harness connector to CD changer.
(2) Insert CD changer into instrument panel. Make sure that bumper on back of changer is inserted into instrument panel opening.
(3) Pull radio from instrument panel far enough to reach behind. Pull CD changer cable through radio opening while inserting changer into instrument panel.
(4) Install radio.
(5) Install screws to radio and CD changer.
(6) Install lower center trim bezel.
(7) Connect battery negative cable.

POWER ANTENNA - EXPORT

DIAGNOSIS AND TESTING - POWER ANTENNA - EXPORT

Refer to the appropriate wiring information. The wiring information includes wiring diagrams, proper wire and connector repair procedures, further details on wire harness routing and retention, as well as pin-out and location views for the various wire harness connectors, splices and grounds.

(1) Using an ohmmeter, check for continuity between the antenna body and ground. There should be no measurable resistance. If OK, go to Step 2. If not, repair or clean ground as necessary.

(2) Disconnect the wire harness connector at the antenna. Check for battery voltage at pin A1. If OK, go to Step 3. If not, check circuit fuse or check for a shorted or open wire.

(3) With the ignition in the ON or ACC position, turn radio ON and check for battery voltage at pin A2. If OK, replace power antenna (Refer to 8 - ELECTRICAL/AUDIO/ANTENNA - REMOVAL). If not, check for a shorted or open wire.

REMOVAL

(1) Disconnect and isolate the battery negative cable.

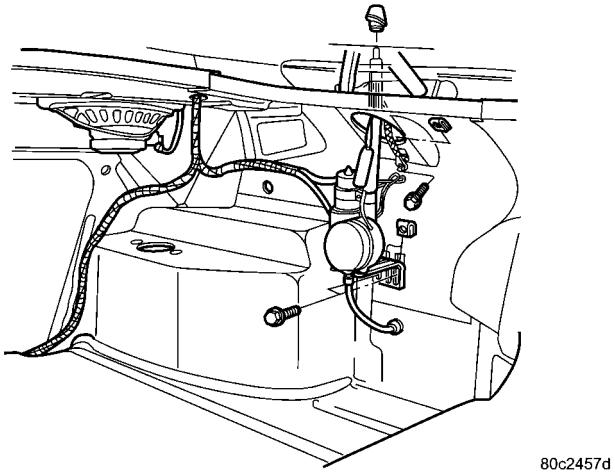

Fig. 3 POWER ANTENNA - TYPICAL

(2) Disconnect drain tube.
(3) Disconnect electrical connector.
(4) Disconnect antenna cable.
(5) Remove mounting bolts from antenna (Fig. 3).
(6) Pull antenna through grommet in quarter panel.

INSTALLATION

(1) Push antenna up through grommet in quarter panel.
(2) Install mounting bolts to antenna. Tighten to 12 N·m (110 in. lbs.).
(3) Connect antenna cable.
(4) Connect electrical connector to antenna.
(5) Connect drain tube.
(6) Install ground strap (if equipped) and fastener. Tighten to 12 N·m (110 in. lbs.).
(7) Connect battery negative cable.

REMOTE SWITCHES

DESCRIPTION

Remote radio control switches are rocker-type switch units (Fig. 4) are mounted in the upper spoke covers of the rear (instrument panel side) steering wheel trim cover. The switch unit on the left side is the seek switch and has seek up, seek down, and preset station advance switch functions. The switch unit on the right side is the volume control switch and has volume up, volume down, and mode advance switch functions.

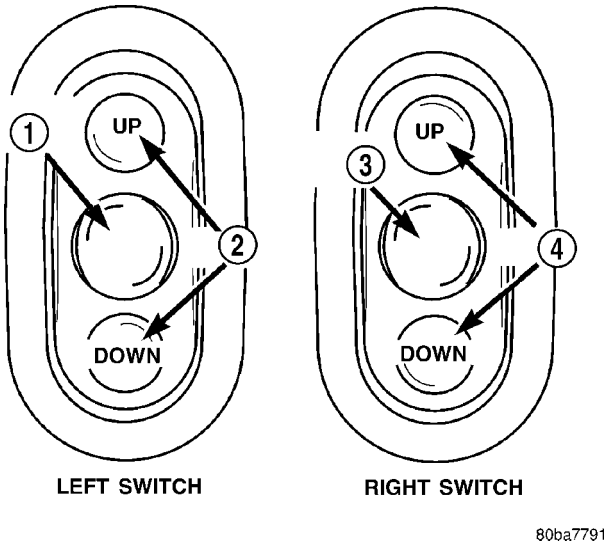

Fig. 4 REMOTE RADIO SWITCHES

1 - PRESET ADVANCE
2 - SEEK
3 - MODE ADVANCE
4 - VOLUME

The two remote radio switch units are each retained in a mounting hole located on opposite sides of the rear steering wheel trim cover by four integral snap features. A plastic bracket on the back of each switch unit provides additional support for the unit by extending towards the center of the steering wheel where it is clamped between the steering wheel armature and the steering wheel rear trim cover mounting boss by the trim cover mounting screw.

REMOTE SWITCHES (Continued)

The two remote radio switch units share a common steering wheel wire harness with the vehicle speed control switches. The steering wheel wire harness is connected to the instrument panel wire harness through the clockspring.

OPERATION

The six switches in the two remote radio switch units are normally open, resistor multiplexed momentary switches that are hard wired to the Body Control Module (BCM) through the clockspring. The BCM sends a five volt reference signal to both switch units on one circuit, and senses the status of all of the switches by reading the voltage drop on a second circuit.

When the BCM senses an input (voltage drop) from any one of the remote radio switches, it sends the proper switch status messages on the Programmable Communication Interface (PCI) data bus network to the radio receiver. The electronic circuitry within the radio receiver is programmed to respond to these remote radio switch status messages by adjusting the radio settings as requested. For diagnosis of the BCM or the PCI data bus, the use of a DRB III scan tool and the proper Body Diagnostic Procedures manual are recommended.

DIAGNOSIS AND TESTING - REMOTE SWITCHES

Any diagnosis of the Audio system should begin with the use of the DRB III® diagnostic tool. For information on the use of the DRB III®, refer to the appropriate Diagnostic Service Manual.

Refer to the appropriate wiring information. The wiring information includes wiring diagrams, proper wire and connector repair procedures, details of wire harness routing and retention, connector pin-out information and location views for the various wire harness connectors, splices and grounds.

WARNING: DISABLE THE AIRBAG SYSTEM BEFORE ATTEMPTING ANY STEERING WHEEL, STEERING COLUMN, SEAT BELT TENSIONER, SIDE AIRBAG, OR INSTRUMENT PANEL COMPONENT DIAGNOSIS OR SERVICE. DISCONNECT AND ISOLATE THE BATTERY NEGATIVE (GROUND) CABLE, THEN WAIT TWO MINUTES FOR THE AIRBAG SYSTEM CAPACITOR TO DISCHARGE BEFORE PERFORMING FURTHER DIAGNOSIS OR SERVICE. THIS IS THE ONLY SURE WAY TO DISABLE THE AIRBAG SYSTEM. FAILURE TO TAKE THE PROPER PRECAUTIONS COULD RESULT IN ACCIDENTAL AIRBAG DEPLOYMENT AND POSSIBLE PERSONAL INJURY.

(1) Disconnect and isolate the battery negative cable. Remove the remote radio switch(es) (Fig. 5) from the steering wheel.

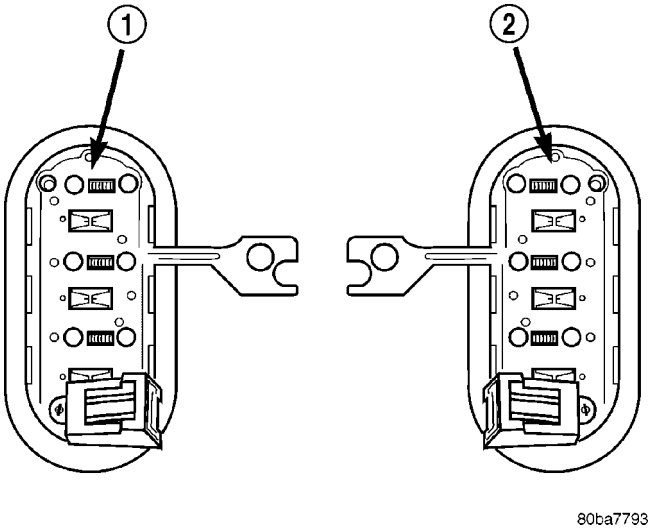

Fig. 5 REMOTE RADIO SWITCHES

1 - BLACK (LEFT) SWITCH
2 - WHITE (RIGHT) SWITCH

(2) Use an ohmmeter to check the switch resistances as shown in the Remote Radio Switch Test table. If the remote radio switch resistances check OK, go to Step 3. If not OK, replace the faulty switch.

REMOTE RADIO SWITCH TEST

Switch	Switch Position	Resistance
Right (White)	Volume Up	3.9K ohms ±5%
Right (White)	Volume Down	10K ohms ±5%
Right (White)	Mode Advance	330 0hms ±5%
Left (Black)	Seek Up	1.2K ohms ±5%
Left (Black)	Seek Down	2.2K ohms ±5%
Left (Black)	Pre-Set Station Advance	68K ohms ±5%

(3) Reconnect the battery negative cable. Turn the ignition switch to the ON position. Check for 5 volts at the radio control mux circuit cavities of the steering wheel wire harness connectors for both remote radio switches. If OK, go to Step 4. If not OK, repair the open or shorted radio control mux circuit to the Body Control Module (BCM) as required.

REMOTE SWITCHES (Continued)

(4) Disconnect and isolate the battery negative cable. Disconnect the 18-way instrument panel wire harness connector from the BCM. Check for continuity between the remote radio switch ground circuit cavities of the steering wheel wire harness connectors for both remote radio switches and a good ground. There should be no continuity. If OK, go to Step 5. If not OK, repair the shorted remote radio switch ground circuit to the BCM as required.

(5) Check for continuity between the remote radio switch ground circuit cavities of the steering wheel wire harness connectors for both remote radio switches and the 18-way instrument panel wire harness connector for the BCM. There should be continuity. If OK, refer to the proper Body Diagnostic Procedures manual to test the BCM and the PCI data bus. If not OK, repair the open remote radio switch ground circuit as required.

REMOVAL

WARNING: DISABLE THE AIRBAG SYSTEM BEFORE ATTEMPTING ANY STEERING WHEEL, STEERING COLUMN, SEAT BELT TENSIONER, SIDE AIRBAG, OR INSTRUMENT PANEL COMPONENT DIAGNOSIS OR SERVICE. DISCONNECT AND ISOLATE THE BATTERY NEGATIVE (GROUND) CABLE, THEN WAIT TWO MINUTES FOR THE AIRBAG SYSTEM CAPACITOR TO DISCHARGE BEFORE PERFORMING FURTHER DIAGNOSIS OR SERVICE. THIS IS THE ONLY SURE WAY TO DISABLE THE AIRBAG SYSTEM. FAILURE TO TAKE THE PROPER PRECAUTIONS COULD RESULT IN ACCIDENTAL AIRBAG DEPLOYMENT AND POSSIBLE PERSONAL INJURY.

(1) Disconnect and isolate the battery negative cable.

(2) Remove the driver side airbag module from the steering wheel. (Refer to 8 - ELECTRICAL/RESTRAINTS/DRIVER AIRBAG - REMOVAL).

(3) Remove the speed control switch located on the same side of the steering wheel as the remote radio switch that is being serviced. (Refer to 8 - ELECTRICAL/SPEED CONTROL/SWITCH - REMOVAL).

(4) Disconnect the steering wheel wire harness connector from the connector receptacle of the remote radio switch (Fig. 6).

(5) From the inside of the steering wheel rear trim cover, press firmly and evenly outward on the back of the switch to disengage the four snap features that secure the switch to the inside of the mounting hole.

(6) From the outside of the steering wheel rear trim cover, remove the remote radio switch from the trim cover mounting hole.

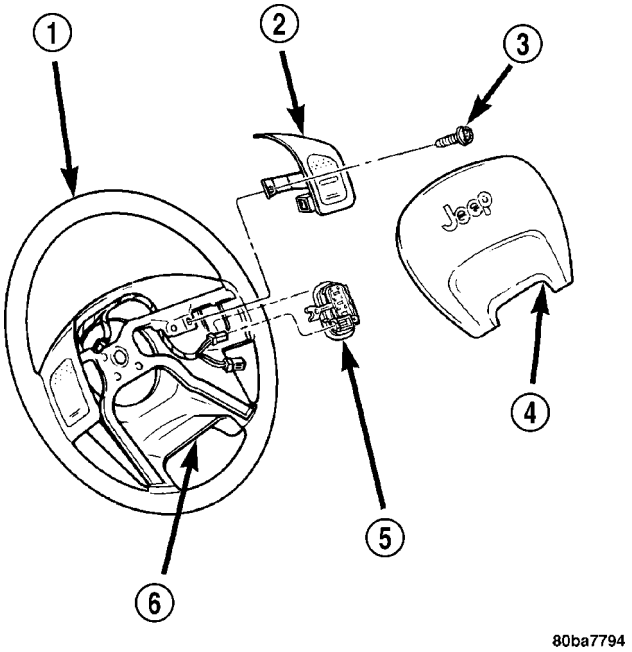

Fig. 6 REMOTE RADIO SWITCHES - TYPICAL

1 - STEERING WHEEL
2 - SPEED CONTROL SWITCH
3 - SCREW
4 - DRIVER SIDE AIRBAG MODULE
5 - REMOTE RADIO SWITCH
6 - REAR TRIM COVER

INSTALLATION

WARNING: DISABLE THE AIRBAG SYSTEM BEFORE ATTEMPTING ANY STEERING WHEEL, STEERING COLUMN, SEAT BELT TENSIONER, SIDE AIRBAG, OR INSTRUMENT PANEL COMPONENT DIAGNOSIS OR SERVICE. DISCONNECT AND ISOLATE THE BATTERY NEGATIVE (GROUND) CABLE, THEN WAIT TWO MINUTES FOR THE AIRBAG SYSTEM CAPACITOR TO DISCHARGE BEFORE PERFORMING FURTHER DIAGNOSIS OR SERVICE. THIS IS THE ONLY SURE WAY TO DISABLE THE AIRBAG SYSTEM. FAILURE TO TAKE THE PROPER PRECAUTIONS COULD RESULT IN ACCIDENTAL AIRBAG DEPLOYMENT AND POSSIBLE PERSONAL INJURY.

(1) Position the remote radio switch to the mounting hole on the outside of the steering wheel rear trim cover. Be certain that the connector receptacle is oriented toward the bottom of the switch and pointed toward the center of the steering wheel.

(2) Press firmly and evenly on the remote radio switch until each of the switch snap features is fully engaged in the mounting hole of the steering wheel rear trim cover.

(3) Reconnect the steering wheel wire harness connector to the connector receptacle of the remote radio switch.

REMOTE SWITCHES (Continued)

(4) Install the speed control switch located on the same side of the steering wheel as the remote radio switch. (Refer to 8 - ELECTRICAL/SPEED CONTROL/SWITCH - INSTALLATION).

(5) Install the driver side airbag module to the steering wheel. (Refer to 8 - ELECTRICAL/RESTRAINTS/DRIVER AIRBAG - INSTALLATION).

(6) Connect the battery negative cable.

RADIO

DESCRIPTION

Available factory-installed radio receivers for this model include:

- AM/FM/cassette/CD (RAZ sales code)
- AM/FM/cassette with CD changer control feature (RBB sales code)
- AM/FM/CD with CD changer control feature (RBK sales code)
- AM/FM/cassette/CD (RBY sales code) - export only
- AM/FM/cassette/CD with CD changer control feature (RAD sales code) - export only

All factory-installed radio receivers can communicate on the Programmable Communications Interface (PCI) data bus network. All factory-installed receivers are stereo Electronically Tuned Radios (ETR) and include an electronic digital clock function.

These radio receivers can only be serviced by an authorized radio repair station. See the latest Warranty Policies and Procedures manual for a current listing of authorized radio repair stations.

OPERATION

The radio receiver operates on ignition switched battery current that is available only when the ignition switch is in the On or Accessory positions. The electronic digital clock function of the radio operates on fused battery current supplied through the IOD fuse, regardless of the ignition switch position.

For more information on the features, setting procedures, and control functions for each of the available factory-installed radio receivers, refer to the owner's manual.

REMOVAL

(1) Disconnect and isolate the battery negative cable.

(2) Remove instrument panel center bezel trim.

(3) Remove radio mounting screws.

(4) Remove radio (Fig. 7).

(5) Disconnect wire harness connectors.

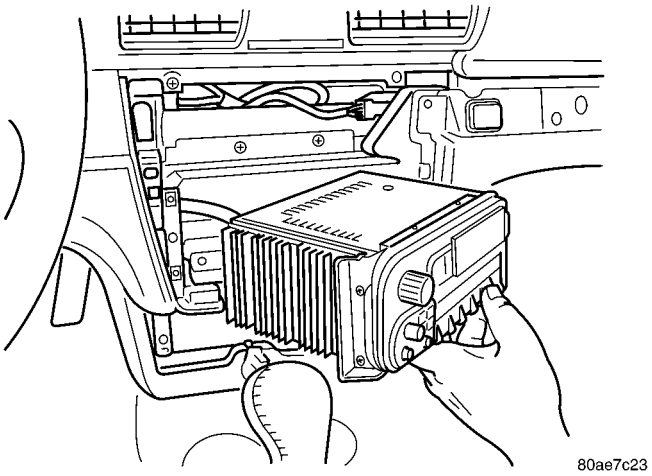

Fig. 7 RADIO

CAUTION: Pulling the antenna cable straight out of the radio without pulling on the locking antenna connector could damage the cable or radio.

(6) Disconnect the antenna cable by pulling the locking antenna connector away from the radio (Fig. 8).

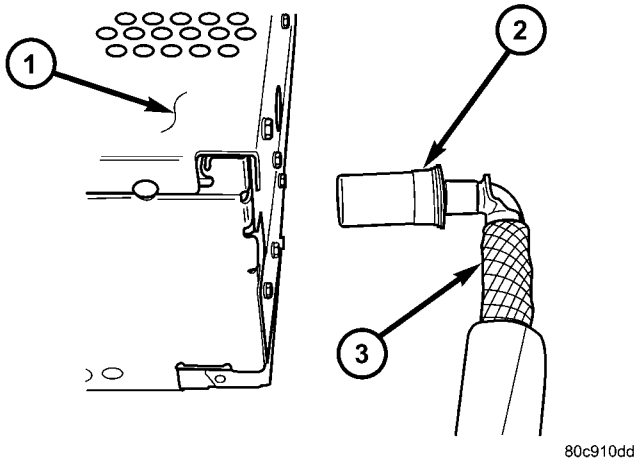

Fig. 8 ANTENNA TO RADIO

1 - RADIO
2 - LOCKING ANTENNA CONNECTOR
3 - INSTRUMENT PANEL ANTENNA CABLE

INSTALLATION

(1) Connect wire harness connector to radio.

(2) Connect antenna to radio.

(3) Install radio and screws. Tighten to 3 N·m (30 in. lbs.).

(4) Install instrument panel center bezel trim.

(5) Connect battery negative cable.

SPEAKER

DESCRIPTION

STANDARD - JR41

The standard equipment speaker system includes speaker in four locations: One 15.2 cm X 22.9 cm (6 in. X 9 in.) speaker is installed in each front door and one 15.2 cm X 22.9 cm (6 in. X 9 in.) speaker is installed outboard at each end of the rear shelf panel.

STANDARD - JR27

The standard equipment speaker system includes speaker in six locations: One 15.2 cm X 22.9 cm (6 in. X 9 in.) speaker is installed in each front door, one 15.2 cm X 22.9 cm (6 in. X 9 in.) speaker is installed in each quarter trim panel and one 6.4 cm (2.5 in.) speaker installed in each end of the instrument panel.

PREMIUM

The optional premium speaker system includes speakers in six locations: One 15.2 cm X 22.9 cm (6 in. X 9 in.) speaker is installed in each front door, one 15.2 cm X 22.9 cm (6 in. X 9 in.) speaker is installed outboard at each end of the rear shelf panel and one 6.4 cm (2.5 in.) speaker installed in each end of the instrument panel. The system includes a separate 120 or 150 watt amplifier located under the front passenger seat.

OPERATION

Two wires connected to each speaker, one feed circuit (+) and one return circuit (–), allow the audio output signal electrical current to flow through the voice coil. For complete circuit diagrams, refer to the appropriate wiring information. The wiring information includes wiring diagrams, proper wire and connector repair procedures, details of wire harness routing and retention, connector pin-out information and location views for the various wire harness connectors, splices and grounds.

DIAGNOSIS AND TESTING - SPEAKER

Any diagnosis of the Audio system should begin with the use of the DRB III® diagnostic tool. For information on the use of the DRB III®, refer to the appropriate Diagnostic Service Manual.

Refer to the appropriate wiring information. The wiring information includes wiring diagrams, proper wire and connector repair procedures, details of wire harness routing and retention, connector pin-out information and location views for the various wire harness connectors, splices and grounds.

WARNING: DISABLE THE AIRBAG SYSTEM BEFORE ATTEMPTING ANY STEERING WHEEL, STEERING COLUMN, SEAT BELT TENSIONER, SIDE AIRBAG, OR INSTRUMENT PANEL COMPONENT DIAGNOSIS OR SERVICE. DISCONNECT AND ISOLATE THE BATTERY NEGATIVE (GROUND) CABLE, THEN WAIT TWO MINUTES FOR THE AIRBAG SYSTEM CAPACITOR TO DISCHARGE BEFORE PERFORMING FURTHER DIAGNOSIS OR SERVICE. THIS IS THE ONLY SURE WAY TO DISABLE THE AIRBAG SYSTEM. FAILURE TO TAKE THE PROPER PRECAUTIONS COULD RESULT IN ACCIDENTAL AIRBAG DEPLOYMENT AND POSSIBLE PERSONAL INJURY.

CAUTION: The speaker output of the radio is a “floating ground” system. Do not allow any speaker lead to short to ground, as damage to the radio may result.

(1) If all speakers are inoperative, check the radio fuses in the Junction Block (JB). If OK, go to Step 2. If not OK, repair the shorted circuit or component as required and replace the faulty fuse.

(2) Check the amplifier fuse (if equipped) in the junction block. If OK, go to Step 3. If not OK, repair the shorted circuit or component as required and replace the faulty fuse.

(3) Turn the ignition switch to the ON position. Turn the radio receiver ON. Adjust the balance and fader control controls to check the performance of each individual speaker. Note the speaker locations that are not performing correctly. Go to Step 4.

(4) Turn the radio receiver OFF. Turn the ignition OFF. Disconnect and isolate the battery negative cable. If vehicle is **not** equipped with a amplifier, remove the radio receiver. If vehicle is equipped with an amplifier. disconnect wire harness connector at output side of amplifier. Go to Step 4.

(5) Check both the speaker feed (+) circuit and return (-) circuit cavities for the inoperative speaker at the radio receiver wire harness connector for continuity to ground. There should be no continuity. If OK, go to Step 5. If not OK, repair the shorted speaker feed (+) and/or return (-) circuits(s) to the speaker as required.

(6) Disconnect wire harness connector at the inoperative speaker. Check for continuity between the speaker feed (+) circuit cavities of the radio receiver wire harness connector or if equipped, the amplifier wire harness connector and the speaker wire harness connector. Repeat the check between the speaker return (-) circuit cavities of the radio receiver wire harness connector and the speaker wire harness connector. In each case, there should be continuity. If OK, replace the faulty speaker. If not OK, repair the open speaker feed (+) and/or return (-) circuits(s) as required.

SPEAKER (Continued)

REMOVAL

FRONT DOOR - JR41

(1) Disconnect and isolate the battery negative cable.

(2) Remove door trim panel (Refer to 23 - BODY/ DOOR - FRONT/TRIM PANEL - REMOVAL).

(3) Remove speaker screws.

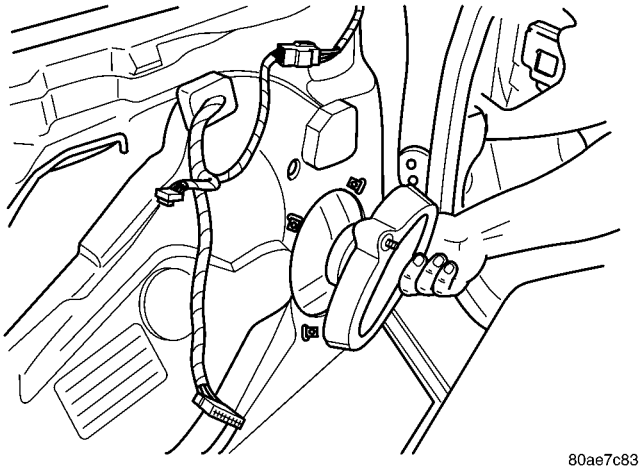

Fig. 9 DOOR SPEAKER - JR41

(4) Disconnect wire harness connector from speaker.

(5) Remove speaker from door (Fig. 9).

FRONT DOOR - JR27

(1) Disconnect and isolate the battery negative cable.

(2) Using a trim stick, pry speaker grill from door trim panel (Fig. 10).

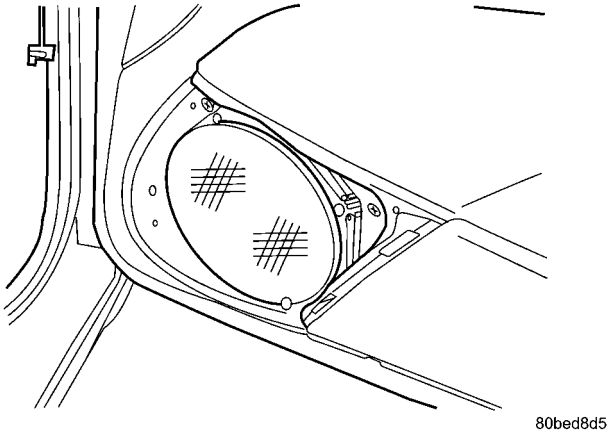

Fig. 10 DOOR SPEAKER - JR27

(3) Remove the speaker mounting fasteners.

(4) Remove speaker from door trim panel.

(5) Disconnect wire harness connector from speaker.

INSTRUMENT PANEL

(1) Disconnect and isolate battery negative cable.

(2) Remove A-pillar trim.

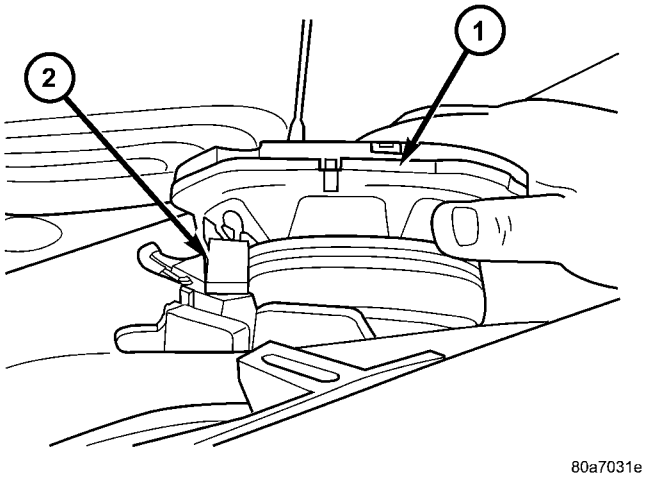

Fig. 11 INSTRUMENT PANEL SPEAKER

1 - INSTRUMENT PANEL SPEAKER
2 - ELECTRICAL HARNESS CONNECTOR

(3) Remove instrument panel top pad (Refer to 23 - BODY/INSTRUMENT PANEL/INSTRUMENT PANEL TOP PAD - REMOVAL).

(4) Remove speaker screws.

(5) Disconnect wire harness connector from speaker.

(6) Remove speaker (Fig. 11).

REAR SPEAKER - JR41

(1) Disconnect and isolate the battery negative cable.

(2) Fold down the rear seat backs.

(3) Remove C-pillar trim.

(4) Remove lower quarter trim behind rear seat backs.

(5) Remove fasteners from rear shelf trim. Pull out trim to access speaker.

(6) Remove speaker screws.

(7) Disconnect wire harness connector.

(8) Remove speaker (Fig. 12).

REAR SPEAKER - JR27

(1) Disconnect and isolate the battery negative cable.

(2) Using a trim stick, pry the speaker grill from the trim panel.

(3) Remove speaker mounting screws (Fig. 13).

(4) Remove speaker from trim panel.

(5) Disconnect wire harness connector from speaker.

SPEAKER (Continued)

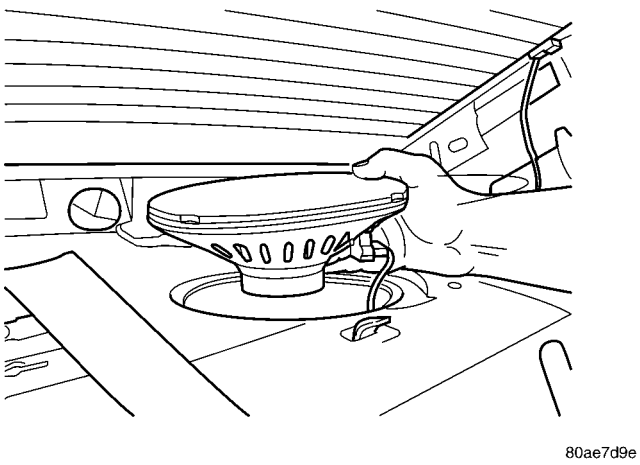

Fig. 12 REAR SPEAKER - JR41

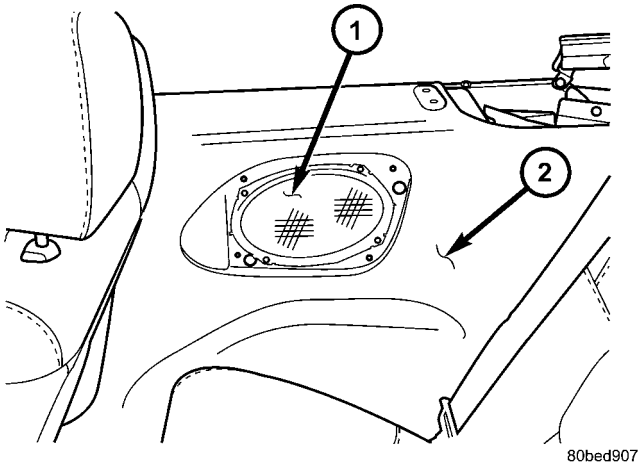

Fig. 13 REAR SPEAKER - JR27

1 - REAR SPEAKER
2 - TRIM PANEL

INSTALLATION

FRONT DOOR SPEAKER – JR41

(1) Reconnect wire harness to speaker.
(2) Align and install speaker to door.
(3) Install speaker screws. Tighten to 3 N·m (30 in. lbs.).
(4) Install door trim panel.
(5) Reconnect battery negative cable.

FRONT DOOR SPEAKER – JR27

(1) Connect the wire harness connector to speaker.
(2) Install the speaker to the door trim panel.
(3) Install the speaker mounting fasteners. Tighten to 4 N·m (35 in. lbs.).
(4) Press speaker grill onto the door panel.
(5) Connect the battery negative cable.

INSTRUMENT PANEL SPEAKER

(1) Connect wire harness connector to speaker.
(2) Install speaker screws. Tighten to 3 N·m (30 in. lbs.).
(3) Install instrument panel top cover.
(4) Install A-pillar trim.
(5) Connect battery negative cable.

REAR SPEAKER - JR41

(1) Connect wire harness connector to speaker.
(2) Position speaker into opening.
(3) Install speaker screws. Tighten to 4 N·m (35 in. lbs.).
(4) Install rear shelf trim.
(5) Install lower quarter trim panel.
(6) Install C-pillar trim.
(7) Raise seat backs.
(8) Connect battery negative cable.

REAR SPEAKER - JR27

(1) Connect wire harness connector to speaker.
(2) Position speaker into trim panel.
(3) Install speaker mounting screws. Tighten to 4 N·m (35 in. lbs.).
(4) Press speaker grill into position.
(5) Connect battery negative cable.

CHIME/BUZZER

TABLE OF CONTENTS

page

CHIME/BUZZER
DESCRIPTION 1
OPERATION 1
DIAGNOSIS AND TESTING
DIAGNOSIS AND TESTING - CHIME CONDITIONS 2
DIAGNOSIS AND TESTING - EXTERIOR LAMPS LEFT ON 3
DIAGNOSIS AND TESTING - KEY LEFT IN IGNITION SWITCH 3
DIAGNOSIS AND TESTING - FASTEN SEAT BELTS 3

CHIME/BUZZER

DESCRIPTION

The chime warning/reminder system includes signals for fasten seat belts, certain warning indicators, exterior lamps left ON, key left in ignition and door ajar.

For diagnosis and testing, use the DRB lll® scan tool and the proper Body Diagnostic Procedures manual.

OPERATION

DOOR AJAR CHIME

The BCM will sound an audible chime when the key is in the ignition and the drivers door is open. This is to prevent partial closing of vehicle doors.

An audible chime will sound when the vehicle begins to move and the transmission range indicator display will indicate DOOR.

ENHANCED SEAT BELT REMINDER

If all the following are met after sixty seconds with the engine ON, then the enhanced seat belt reminder feature will be activated.

- Driver seat belt is unbuckled for ten seconds or more.
- Vehicle speed is greater than five mph (8 km/h).
- The gear positioning is not in REVERSE (except in MTX vehicles where the reverse position can not be detected).

The seat belt indicator will periodically blink, accompanied with a continuous chime for approximately ninety-six seconds or until the driver seat belt is buckled. When the enhanced seat belt feature is not initiated or if the feature is disabled, the seat belt indicator will be turned ON continuously until the driver seat belt is buckled.

In the same ignition cycle, if the seat belt is again unbuckled for more than ten seconds with the vehicle speed greater than five mph (8 km/h), the enhanced seat belt reminder feature will again be initiated.

The enhanced seat belt reminder feature is customer programmable and can be enabled/disabled with the use of a DRBIII® scan tool, or by the customer completing a sequence of steps.

CUSTOMER PROGRAMMING OF ENHANCED SEAT BELT REMINDER FEATURE

(1) With the ignition not in RUN or START, buckle the driver seat belt.

(2) Turn the ignition switch to the RUN or START position and wait for the seat belt reminder check to be completed.

(3) Unbuckle and then re-buckle the driver seat belt causing the indicator to go ON and OFF three or more times ending with the seat belt buckled.

(4) Return the ignition switch back to a non-RUN or no-START position (the feature will toggle from the current status) and a confirmation chime will sound indicating to the customer the proper sequence to enable/disable the feature was performed.

EXTERIOR LAMPS LEFT ON

An audible chime tone that indicates the exterior lamps were left on.

FASTEN SEAT BELTS

At power up, a seat belt lamp bulb check will be conducted by the instrument cluster. If the driver side seat belt buckle is unbuckled during the bulb check, an accompanying chime will sound within the duration of the bulb check.

KEY LEFT IN IGNITION

An audible chime tone that indicates the key was left in ignition.

CHIME/BUZZER (Continued)

SINGLE WARNING CHIME

After bulb check at power-up, if any of the following indicators are still activated, the cluster will request a single chime from the BCM. ABS, Air Bag, Check Engine, Charging System, Engine Temperature, Low Fuel (after 10 seconds for accurate fuel information), and BRAKE (if speed is greater than 2 mph).

DIAGNOSIS AND TESTING

DIAGNOSIS AND TESTING - CHIME CONDITIONS

For Removal and Installation of Junction Block (JB) (Refer to 8 - ELECTRICAL/POWER DISTRIBUTION/JUNCTION BLOCK - REMOVAL).

For Removal and Installation of Body Control Module (BCM), refer to Electrical, Electronic Control Modules, Body Control Modules, Removal, and Installation.

NO TONE WHEN IGNITION SWITCH IS TURNED ON AND DRIVERS SEAT BELT IS UNBUCKLED AND FULLY RETRACTED

(1) Check driver's seat belt retractor switch for a ground when belt is retracted.

(2) Use DRB III® scan tool to perform PCI data bus diagnostics on the BCM for battery, ignition and seat belt switch inputs.

(3) Use DRB III® scan tool to perform actuator diagnostics on BCM Chime.

(4) Check for tone in any other function.

(5) Remove BCM from Junction Block. Check for battery voltage at terminal JB-12 and ignition feed at terminal JB-6 of BCM (Fig. 1). Refer to the appropriate wiring information. The wiring information includes wiring diagrams, proper wire and connector repair procedures, details of wire harness routing and retention, connector pin-out information and location views for the various wire harness connectors, splices and grounds.

(6) If voltage not OK, repair as necessary.

NO FASTEN SEAT BELT LAMP WHEN IGNITION SWITCH IS TURNED ON

(1) At power-up, the cluster will turn ON the seat belt warning indicator for 6 ± 1 seconds as required regardless of the driver side seat belt buckle status. If the warning indicator does not turn ON, verify if the socketed red LED is seated properly and good contact with the PC-board is present. If not seated properly, then seat the LED properly by twisting the socket counterclockwise. If seated properly, replace the LED.

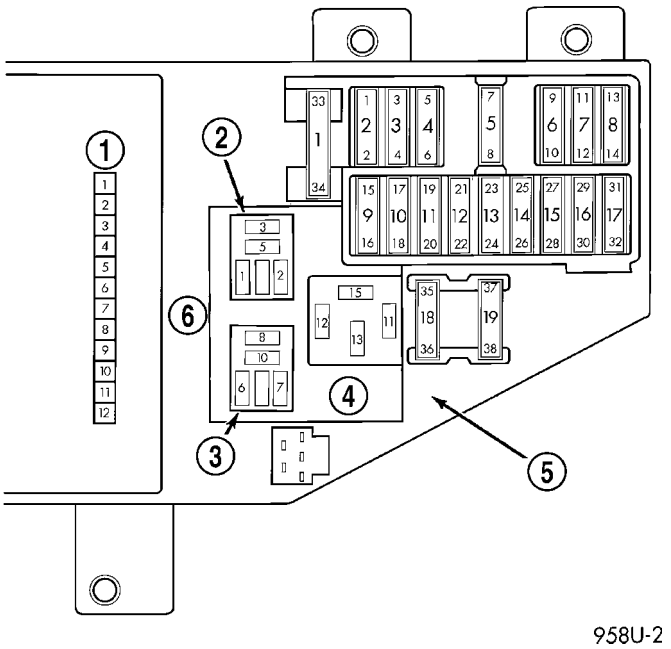

Fig. 1 JUNCTION BLOCK CONNECTOR TO THE BCM

1 - BODY CONTROL MODULE
2 - H/LP RELAY
3 - HORN RELAY
4 - EBL
5 - CIRCUIT BREAKERS
6 - HORN

SEAT BELT LAMP ON FOR MORE THAN 7 SECONDS AFTER DRIVER SEAT BELT BUCKLE SWITCH IS FASTENED AND IGNITION ON

(1) Use a DRB III® scan tool to verify status of the driver seat belt buckle switch as received by the instrument cluster. Compare to the actual seat belt buckle status: If buckled, lamp is OFF or if unbuckled, lamp is ON. If the status received by the instrument cluster does match the actual buckle seat belt switch status (buckled/unbuckled), then check the driver seat belt switch and wiring for proper connection.

NO TONE OR DOOR INDICATED IN PLACE OF ODOMETER WHEN A DOOR IS AJAR AND VEHICLE BEGINS MOVING

The vehicle must be moving for the chime to occur. However the door indicator will come ON regardless of the vehicle movement. The PCI data bus, Transmission Control Module (TCM) and Powertrain Control Module (PCM) must be operational.

(1) Check all door jamb switches.

(2) Use DRB III® scan tool to perform PCI data bus diagnostics on BCM for battery and ignition switch input

(3) Inspect BCM connectors and wires for proper connection.

CHIME/BUZZER (Continued)

(4) Remove BCM from Junction Block. Check for battery voltage at terminal JB-12 and ignition feed at terminal JB-6 of BCM. Refer to the appropriate wiring information.

(5) If voltage not OK, repair as necessary.

NO TONE WHEN HEADLAMPS ARE ON, IGNITION SWITCH IS OFF AND DRIVER'S DOOR IS OPEN.

(1) Check left door jamb switch for good ground when driver's door is open.

(2) Use DRB III® scan tool to perform PCI data bus diagnostics on BCM for battery, ignition switch input, headlamp and driver's door input and Chime Output Test.

(3) Check headlamp switch.

(4) Inspect BCM connectors and wires for proper connection.

(5) Remove BCM from Junction Block. Check for battery voltage at terminal JB-12 and ignition feed at terminal JB-6 of BCM. Refer to the appropriate wiring information.

(6) If voltage not OK, repair as necessary.

NO TONE WHEN IGNITION KEY IS LEFT IN IGNITION SWITCH AND IT IS IN THE OFF POSITION WITH DRIVER'S DOOR IS OPEN

(1) Check left door jamb switch for good ground when drivers door is open.

(2) Use DRB III® scan tool to perform PCI data bus diagnostics on BCM for battery, ignition switch input, key-in-switch and driver's door input and Chime Output Test.

(3) Check key-in switch.

(4) Inspect BCM connectors and wires for proper connection.

(5) Remove BCM from Junction Block. Check for battery voltage at terminal JB-12 and ignition feed at terminal JB-6 of BCM. Refer to the appropriate wiring information.

(6) If voltage not OK, repair as necessary.

CHIMES CONTINUE WHEN HEADLAMPS ARE TURNED OFF AND/OR KEY IS REMOVED FROM IGNITION

(1) Use DRB III® scan tool to perform PCI data bus diagnostics on BCM for headlamp or key-in-ignition inputs.

(2) Check wiring for a grounded condition between key-in switch and BCM. Check headlamp switch to BCM wiring for short to battery.

(3) Inspect BCM connectors and wires for proper connection.

DIAGNOSIS AND TESTING - EXTERIOR LAMPS LEFT ON

To test the headlamps left on function, turn ignition off, turn exterior lamps on with driver's door open. Chime should sound until headlamps are turned off or drivers door is closed.

DIAGNOSIS AND TESTING - KEY LEFT IN IGNITION SWITCH

To test the key left in ignition function:

- The ignition switch must be in the OFF position with key in ignition.
- Driver's door open.
- Chime should sound until key is removed from ignition or drivers door is closed.

DIAGNOSIS AND TESTING - FASTEN SEAT BELTS

To test, the ignition switch must be in the OFF position before testing the fasten seat belts. Turn the ignition switch to the ON position with the driver's seat belt unbuckled. The seat belt warning lamp should light for 5 to 7 seconds and the chime should sound 5 to 7 seconds.

ELECTRONIC CONTROL MODULES

TABLE OF CONTENTS

page

ELECTRONIC CONTROL MODULES
STANDARD PROCEDURE - PCM/SKIM PROGRAMMING 1
BODY CONTROL MODULE
DESCRIPTION 2
OPERATION 3
REMOVAL 3
INSTALLATION 3
CONTROLLER ANTILOCK BRAKE
DESCRIPTION 4
OPERATION 4
REMOVAL 4
INSTALLATION 5
HEATED SEAT MODULE
DESCRIPTION 5
OPERATION 5
DIAGNOSIS AND TESTING - HEATED SEAT MODULE 5
REMOVAL 6
INSTALLATION 6
POWERTRAIN CONTROL MODULE
DESCRIPTION
OPERATION 6
OPERATION - SENSOR RETURN - PCM INPUT 9
OPERATION - DATA BUS COMMUNICATION RECEIVE - PCM INPUT 9
OPERATION - IGNITION SENSE - PCM INPUT 9
PCM REPLACEMENT 9
OPERATION - PCM GROUND 10
OPERATION
OPERATION - 8-VOLT SUPPLY - PCM OUTPUT - SBEC CONTROLLER 10
OPERATION - 5 VOLT SUPPLY - PCM OUTPUT 10
STANDARD PROCEDURE
STANDARD PROCEDURE - OBTAINING DIAGNOSTIC TROUBLE CODES 10
STANDARD PROCEDURE - PINION FACTOR SETTING 10
STANDARD PROCEDURE - QUICK LEARN PROCEDURE 11
REMOVAL
REMOVAL - SBEC CONTROLLER 11
REMOVAL - NGC CONTROLLER 12
INSTALLATION
INSTALLATION - SBEC CONTROLLER 13
INSTALLATION - NGC CONTROLLER 13
SENTRY KEY IMMOBILIZER MODULE
DESCRIPTION 13
OPERATION 14
REMOVAL 14
INSTALLATION 14
TRANSMISSION CONTROL MODULE
DESCRIPTION 15
OPERATION 15
STANDARD PROCEDURE
STANDARD PROCEDURE - PINION FACTOR SETTING 17
STANDARD PROCEDURE - QUICK LEARN PROCEDURE 18
REMOVAL 18
INSTALLATION 18

ELECTRONIC CONTROL MODULES

STANDARD PROCEDURE - PCM/SKIM PROGRAMMING

NOTE: Before replacing the PCM for a failed driver, control circuit or ground circuit, be sure to check the related component/circuit integrity for failures not detected due to a double fault in the circuit. Most PCM driver/control circuit failures are caused by internal component failures (i.e. relay and solenoids) and shorted circuits (i.e. pull-ups, drivers and switched circuits). These failures are difficult to detect when a double fault has occurred and only one DTC has set.

When a PCM (SBEC) and the SKIM are replaced at the same time perform the following steps in order:

(1) Program the new PCM (SBEC)
(2) Program the new SKIM
(3) Replace all ignition keys and program them to the new SKIM.

ELECTRONIC CONTROL MODULES (Continued)

PROGRAMMING THE PCM (SBEC)

The SKIS Secret Key is an ID code that is unique to each SKIM. This code is programmed and stored in the SKIM, PCM and transponder chip (ignition keys). When replacing the PCM it is necessary to program the secret key into the new PCM using the DRB III. Perform the following steps to program the secret key into the PCM.

(1) Turn the ignition switch on (transmission in park/neutral).

(2) Use the DRB III and select THEFT ALARM, SKIM then MISCELLANEOUS.

(3) Select PCM REPLACED (GAS ENGINE).

(4) Enter secured access mode by entering the vehicle four-digit PIN.

(5) Select ENTER to update PCM VIN.

NOTE: If three attempts are made to enter secure access mode using an incorrect PIN, secured access mode will be locked out for one hour. To exit this lockout mode, turn the ignition to the RUN position for one hour then enter the correct PIN. (Ensure all accessories are turned off. Also monitor the battery state and connect a battery charger if necessary).

(6) Press ENTER to transfer the secret key (the SKIM will send the secret key to the PCM).

(7) Press Page Back to get to the Select System menu and select ENGINE, MISCELLANEOUS, and SRI MEMORY CHECK.

(8) The DRB III will ask, Is odometer reading between XX and XX? Select the YES or NO button on the DRB III. If NO is selected, the DRB III will read, Enter odometer Reading<From I.P. odometer>. Enter the odometer reading from the Instrument Panel and press ENTER.

PROGRAMMING THE SKIM

(1) Turn the ignition switch on (transmission in park/neutral).

(2) Use the DRB III and select THEFT ALARM, SKIM then MISCELLANEOUS.

(3) Select PCM REPLACED (GAS ENGINE).

(4) Program the vehicle four-digit PIN into SKIM.

(5) Select COUNTRY CODE and enter the correct country.

NOTE: Be sure to enter the correct country code. If the incorrect country code is programmed into SKIM, the SKIM must be replaced.

(6) Select YES to update VIN (the SKIM will learn the VIN from the PCM).

(7) Press ENTER to transfer the secret key (the PCM will send the secret key to the SKIM).

(8) Program ignition keys to SKIM.

NOTE: If the PCM and the SKIM are replaced at the same time, all vehicle keys will need to be replaced and programmed to the new SKIM.

PROGRAMMING IGNITION KEYS TO THE SKIM

(1) Turn the ignition switch on (transmission in park/neutral).

(2) Use the DRB III and select THEFT ALARM, SKIM then MISCELLANEOUS.

(3) Select PROGRAM IGNITION KEY'S.

(4) Enter secured access mode by entering the vehicle four-digit PIN.

NOTE: A maximum of eight keys can be learned to each SKIM. Once a key is learned to a SKIM it (the key) cannot be transferred to another vehicle.

If ignition key programming is unsuccessful, the DRB III will display one of the following messages:

Programming Not Attempted - The DRB III attempts to read the programmed key status and there are no keys programmed into SKIM memory.

Programming Key Failed (Possible Used Key From Wrong Vehicle) - SKIM is unable to program key due to one of the following:

- faulty ignition key transponder
- ignition key is programmed to another vehicle.

8 Keys Already Learned, Programming Not Done - SKIM transponder ID memory is full.

(5) Obtain ignition keys to be programmed from customer (8 keys maximum).

(6) Using the DRB III, erase all ignition keys by selecting MISCELLANEOUS and ERASE ALL CURRENT IGN. KEYS.

(7) Program all ignition keys.

Learned Key In Ignition - Ignition key transponder ID is currently programmed in SKIM memory.

BODY CONTROL MODULE

DESCRIPTION

The Body Control Module (BCM) is concealed below the driver side end of the instrument panel in the passenger compartment, where it is secured to the dash panel side of the Junction Block (JB).

BODY CONTROL MODULE (Continued)

The BCM utilizes integrated circuitry and information carried on the Programmable Communications Interface (PCI) data bus network along with many hard wired inputs to monitor many sensor and switch inputs throughout the vehicle. In response to those inputs, the internal circuitry and programming of the BCM allow it to control and integrate many electronic functions and features of the vehicle through both hard wired outputs and the transmission of electronic message outputs to other electronic modules in the vehicle over the PCI data bus.

OPERATION

The Body Control Module (BCM) is designed to control and integrate many of the electronic features and functions of the vehicle. The microprocessor-based BCM hardware and software monitors many hard wired switch and sensor inputs as well as those resources it shares with other electronic modules in the vehicle through its communication over the PCI data bus network. The internal programming and all of these inputs allow the BCM microprocessor to determine the tasks it needs to perform and their priorities, as well as both the standard and optional features that it should provide. The BCM programming then performs those tasks and provides those features through both PCI data bus communication with other electronic modules and through hard wired low current outputs to a number of relays. These relays provide the BCM with the ability to control numerous high current accessory systems in the vehicle.

The BCM monitors its own internal circuitry as well as many of its input and output circuits, and will store a Diagnostic Trouble Code (DTC) in electronic memory for any failure it detects. These DTCs can be retrieved and diagnosed using a DRBIII® scan tool. Refer to the appropriate diagnostic information.

REMOVAL

The Junction Block and Body Control Module (BCM) are attached to each other. After removal they can be separated.

(1) Disconnect and isolate the remote battery negative cable from the terminal on the shock tower.

(2) Open the front driver's door and remove end cap.

(3) Remove power mirror switch bezel, radio bezel, and small bezel on the right side of the steering column.

(4) Remove the left lower instrument panel trim.

(5) Remove silencer.

(6) Remove wire harness connectors from Junction Block.

(7) Remove Junction Block three mounting screws.

(8) Remove Junction Block/BCM by pulling straight down from the mounting bayonet.

(9) Disconnect BCM wire connectors and remove the assembly.

(10) Remove Junction Block/BCM from vehicle.

(11) With the Junction Block/BCM removed from the vehicle, separate the BCM from the Junction Block by removing the four screws.

(12) Disconnect BCM from the Junction Block.

(13) Unsnap the remote keyless entry module from the BCM.

NOTE: The Remote Keyless Entry (RKE) module is attached to the BCM. This must be transferred (if equipped) to the new BCM if being replaced.

NOTE: If BCM is replaced, the VTSS must be enabled in the new BCM via the DRB III® in order to start the vehicle.

INSTALLATION

NOTE: If BCM is replaced, the VTSS must be enabled in the new BCM via the DRB III® in order to start the vehicle.

(1) Snap the remote keyless entry module onto the BCM.

(2) Connect BCM to the Junction Block.

(3) Connect the BCM and junction block together with the four screws.

(4) Install the Junction Block/BCM into vehicle.

(5) Connect BCM wire connectors and install the assembly onto instrument panel.

(6) Install the Junction Block/BCM by pushing straight up.

(7) Install the Junction Block three mounting screws.

(8) Install the wire harness connectors to the Junction Block.

(9) Install the silencer.

(10) Install the left lower instrument panel trim.

(11) Install the power mirror switch bezel, radio bezel, and small bezel to the right of the steering column.

(12) Install the left end cover.

(13) Connect the remote battery negative cable to the remote terminal on the shock tower.

CONTROLLER ANTILOCK BRAKE

DESCRIPTION

The controller antilock brake (CAB) is a microprocessor-based device which monitors the antilock brake system (ABS) during normal braking and controls it when the vehicle is in an ABS stop. The CAB is mounted to the HCU as part of the integrated control unit (ICU) (Fig. 1). The CAB uses a 24-way electrical connector on the vehicle wiring harness. The power source for the CAB is through the ignition switch in the RUN or ON position. The CAB is on the PCI bus.

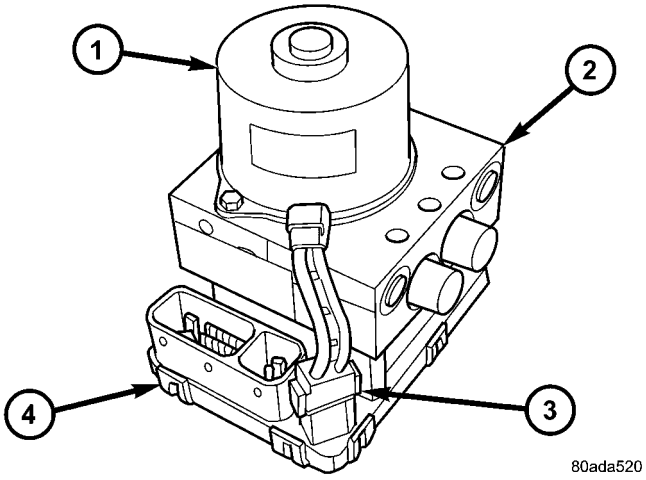

Fig. 1 INTEGRATED CONTROL UNIT (TYPICAL)

1 - PUMP/MOTOR
2 - HCU
3 - PUMP/MOTOR CONNECTOR
4 - CAB

OPERATION

The primary functions of the controller antilock brake (CAB) are to:

- Monitor the antilock brake system for proper operation.
- Detect wheel locking or wheel slipping tendencies by monitoring the speed of all four wheels of the vehicle.
- Control fluid modulation to the wheel brakes while the system is in an ABS mode.
- Store diagnostic information.
- Provide communication to the DRBIII® scan tool while in diagnostic mode.
- Illuminate the ABS and BRAKE (with loss of EVBP) warning indicator lamps.

The CAB constantly monitors the antilock brake system for proper operation. If the CAB detects a fault, it will turn on the amber ABS warning indicator lamp and disable the antilock braking system. The normal base braking system will remain operational.

The CAB continuously monitors the speed of each wheel through the signals generated by the wheel speed sensors to determine if any wheel is beginning to lock. When a wheel locking tendency is detected, the CAB commands the CAB command coils to actuate. The coils then open and close the valves in the HCU that modulate brake fluid pressure in some or all of the hydraulic circuits. The CAB continues to control pressure in individual hydraulic circuits until a locking tendency is no longer present.

The CAB contains a self-diagnostic program that monitors the antilock brake system for system faults. When a fault is detected, the amber ABS warning indicator lamp is turned on and the fault diagnostic trouble code (DTC) is then stored in a diagnostic program memory. These DTC's will remain in the CAB memory even after the ignition has been turned off. The DTC's can be read and cleared from the CAB memory by a technician using the DRBIII® scan tool. If not cleared with a DRBIII® scan tool, the fault occurrence and DTC will be automatically cleared from the CAB memory after the identical fault has not been seen during the next 3,500 miles.

CAB INPUTS

- Wheel speed sensors (four)
- Brake lamp switch
- Ignition switch
- Traction control OFF switch
- System and pump voltage
- Ground
- Diagnostic communication (PCI)

CAB OUTPUTS

- Amber ABS warning indicator lamp actuation (via BUS)
- Instrument cluster (MIC) communication (PCI)
- Diagnostic communication (PCI, via BUS)

REMOVAL

(1) Disconnect the battery negative cable.

(2) Raise vehicle. (Refer to LUBRICATION & MAINTENANCE/HOISTING - STANDARD PROCEDURE)

(3) Pull up on the CAB connector lock and disconnect the 24–way electrical connector and the pump/motor connector from the CAB.

(4) Remove the bolts securing the integrated control unit's (ICU's) mounting bracket to the lower radiator support.

(5) Carefully move the ICU toward the right side of the car. Move the ICU far enough to access the CAB mounting screws. **Be careful not to bend the brake tubes connected to the ICU.**

CONTROLLER ANTILOCK BRAKE (Continued)

(6) Remove the screws securing the CAB to the HCU half of the ICU. Remove the CAB.

INSTALLATION

(1) Install screws to secure the CAB to the HCU half of the ICU. Tighten the mounting screws to 2 N·m (17 in. lbs.) torque.

(2) Remount the ICU mounting bracket to the lower radiator support. Tighten the mounting bolts to 28 N·m (21 ft. lbs.) torque.

(3) Reconnect the 24–way electrical and the pump/motor connector.

(4) Lower vehicle.

(5) Connect negative battery cable.

(6) Connect a DRBIII® to the vehicle and initialize the system.

HEATED SEAT MODULE

DESCRIPTION

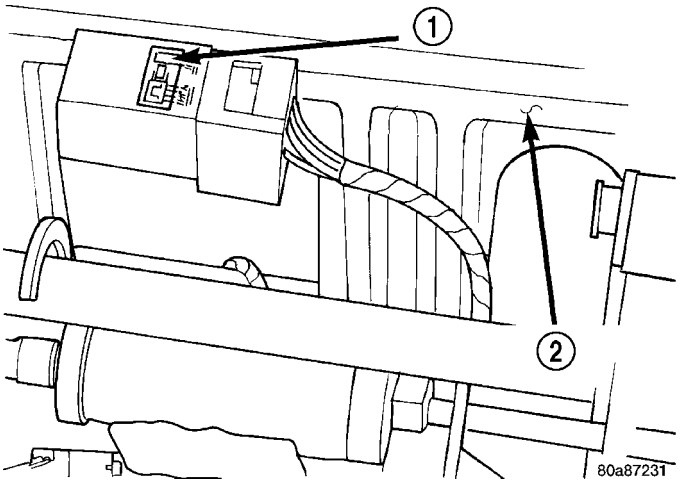

Fig. 2 HEATED SEAT MODULE

1 - HEATED SEAT MODULE
2 - SEAT CUSHION FRAME

Two heated seat modules are used on this vehicle, one for each front seat. The heated seat modules are located under each front seat cushion frame (Fig. 2). The heated seat module has a single connector receptacle that allows the module to be connected to all of the required inputs and outputs through the body wire harness.

The heated seat module is an electronic microprocessor controlled device designed and programmed to use inputs from the ignition switch, the heated seat switch and the heated seat sensor to operate/control the heated seat elements in each front seat.

The heated seat module cannot be repaired. If the heated seat module is damaged or faulty, the entire module must be replaced.

OPERATION

The heated seat module operates on fused battery current received from the ignition switch. The module is grounded at all times through the body harness. Inputs to the module include a resistor multiplexed heated seat switch request circuit for each of the two heated seat switches and the heated seat sensor inputs from the seat cushions of each front seat. In response to those inputs the heated seat module controls battery current feeds to the heated seat elements and sensors.

When a heated seat switch (Driver or Passenger) request signal is received by the heated seat module, the module energizes the selected heated seat sensor circuit and the sensor provides the module with an input indicating the surface temperature of the selected seat cushion.

The Low heat set point is about 38° C (100.4° F), and the High heat set point is about 42° C (107.6° F). If the seat cushion surface temperature input is below the temperature set point for the selected temperature setting, the heated seat module energizes an N-channel Field Effect Transistor (N-FET) within the module which energizes the heated seat elements in the selected seat cushion and back. When the sensor input to the module indicates the correct temperature set point has been achieved, the module de-energizes the N-FET which de-energizes the heated seat elements. The heated seat module will continue to cycle the N-FET as needed to maintain the selected temperature set point.

DIAGNOSIS AND TESTING - HEATED SEAT MODULE

One heated seat module is located under each front seat. The drivers side module controls the drivers heated seat and the passenger controls the passenger heated seat. The first step in the testing procedure is to locate the suspect module and unsnap it from the appropriate seat cushion pan. After the module is visible, disconnect the modules electrical connector. Perform the following tests, Refer to **Wiring** for the location of complete heated seat system wiring diagrams.

(1) Check for 12 volts at the Fused B+ terminal of the heated seat control module electrical connector. If OK go to Step 2. If not OK, check the heated seat cut-out relay, located in the Power Distribution Center.

(2) Turn the ignition switch “ON” and check for 12 volts at the switched ignition feed terminal of the heated seat control module electrical connector. If OK go to Step 3. If not OK, check the ignition feed circuit for shorts or opens.

(3) Check for continuity between a known good ground and the ground wire terminal of the heated

HEATED SEAT MODULE (Continued)

seat control module electrical connector. If OK go to step 4. If not OK, carefully inspect the harness for an open or short.

(4) Check the heated seat switch input terminal of the heated seat control module electrical connector for the proper MUX signal (resistance range of 0-500 ohms, refer to the heated seat switch diagnosis and testing). If OK replace the heated seat module. If not OK, test the heated seat switch and harness as described in this section.

REMOVAL

(1) Move the appropriate power seat track to its uppermost and rearward-most stop position.

(2) Disconnect and isolate the negative battery cable.

(3) Reach under the front of the seat cushion and separate the heated seat module from the seat cushion frame (Fig. 2).

(4) Disconnect the wire harness connector from the connector receptacle on the back of the heated seat module.

(5) Remove the heated seat module from the vehicle.

INSTALLATION

(1) Position the heated seat module under the seat.

(2) Connect the wire harness connector on the back of the heated seat module.

(3) Reposition the drivers power seat track.

(4) Connect the negative battery cable.

POWERTRAIN CONTROL MODULE

DESCRIPTION

OPERATION

The Powertrain Control Module (PCM) is a digital computer containing a microprocessor (Fig. 3) and (Fig. 4). The PCM receives input signals from various switches and sensors referred to as Powertrain Control Module Inputs. Based on these inputs, the PCM adjusts various engine and vehicle operations through devices referred to as Powertrain Control Module Outputs.

NOTE: PCM Inputs:

- Air Conditioning Pressure Transducer
- ASD Relay
- Battery Voltage
- Brake Switch

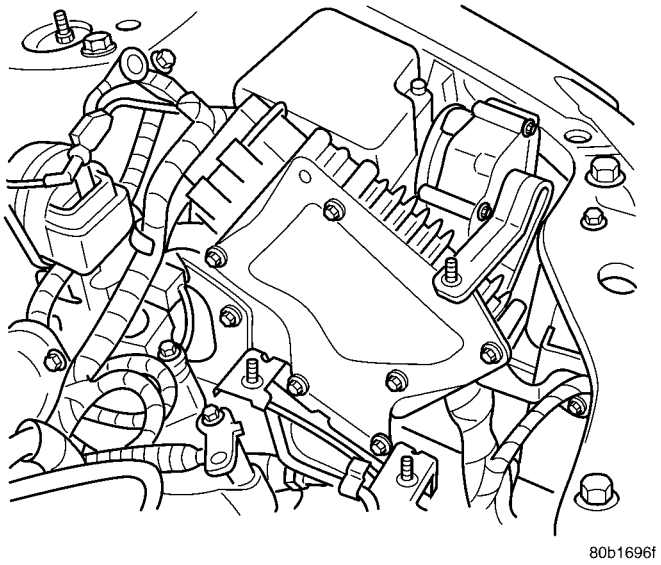

Fig. 3 Powertrain Control Module (PCM)

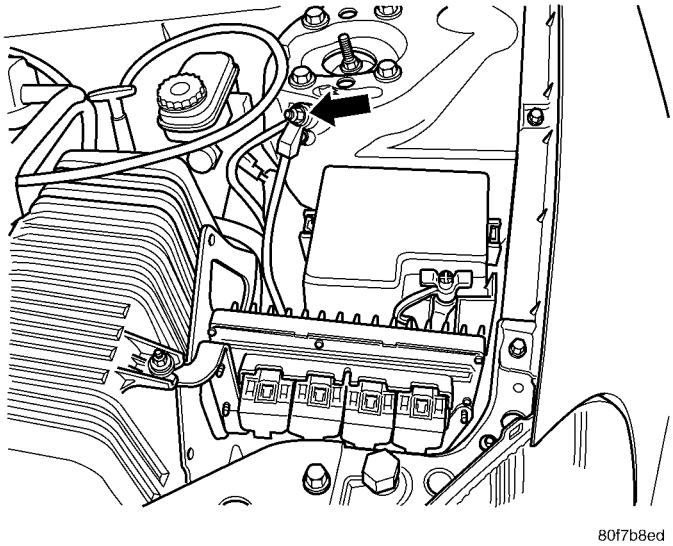

Fig. 4 NGC CONTROLLER

- Camshaft Position Sensor
- Crankshaft Position Sensor
- Distance Sensor (from transmission control module)
- EGR Position Feedback (if equipped)
- Engine Coolant Temperature Sensor
- Heated Oxygen Sensors
- Ignition sense
- Inlet Air Temperature Sensor
- Knock Sensor
- Leak Detection Pump Feedback
- Manifold Absolute Pressure (MAP) Sensor
- Park/Neutral (from trans range sensor)
- PCI Bus
- Power Steering Pressure Switch
- Proportional Purge Sense

POWERTRAIN CONTROL MODULE (Continued)

- SCI Receive
- Speed Control
- Throttle Position Sensor
- Transaxle Control Module (2.7L Only)
- Transmission Control Relay (Switched B+) (2.4L Only)
- Transmission Pressure Switches (2.4L Only)
- Transmission Temperature Sensor (2.4L Only)
- Transmission Input Shaft Speed Sensor (2.4L Only)
- Transmission Output Shaft Speed Sensor (2.4L Only)
- Torque Management Input (From TCM) (2.7L Only)
- Transaxle Gear Engagement (From TCM)
- Vehicle Speed

NOTE: PCM Outputs:

- Air Conditioning Clutch Relay
- Automatic Shut Down (ASD) and Fuel Pump Relays
- Data Link Connector (PCI and SCI Transmit)
- Double Start Override
- EGR Solenoid (if equipped)
- Fuel Injectors
- Generator Field
- High Speed Fan Relay
- Idle Air Control Motor
- Ignition Coils
- Leak Detection Pump
- Natural Vacuum Leak Detection
- Low Speed Fan Relay
- MTV Actuator
- Proportional Purge Solenoid
- SRV Valve
- Speed Control Relay
- Speed Control Vent Relay
- Speed Control Vacuum Relay
- Torque Reduction Request
- Transmission Control Relay (2.4L Only)
- Transmission Solenoids (2.4L Only)
- 8 Volt Output (SBEC controlled vehicles)
- 5 Volt Output

Based on inputs it receives, the powertrain control module (PCM) adjusts fuel injector pulse width, idle speed, ignition timing, and canister purge operation and EGR if equipped. The PCM regulates the cooling fans, air conditioning and speed control systems. The PCM changes generator charge rate by adjusting the generator field.

The PCM adjusts injector pulse width (air-fuel ratio) based on the following inputs.

- Manifold Absolute Pressure
- Engine Speed (crankshaft position sensor)
- Battery Voltage
- Inlet Air Temperature Sensor
- Engine Coolant Temperature
- Exhaust Gas Oxygen Content (heated oxygen sensors)
- Throttle Position

The PCM adjusts engine idle speed through the idle air control motor based on the following inputs.

- Brake Switch
- Engine Coolant Temperature
- Engine Speed (crankshaft position sensor)
- Park/Neutral (
- Transaxle Gear Engagement
- Throttle Position
- Vehicle Speed (from Transmission Control Module) (SBEC controlled vehicles)

The PCM adjusts ignition timing based on the following inputs.

- Inlet Air Temperature
- Engine Coolant Temperature
- Engine Speed (crankshaft position sensor)
- Knock Sensor
- Manifold Absolute Pressure
- Park/Neutral (from trans range sensor)
- Transaxle Gear Engagement
- Throttle Position

The automatic shut down (ASD) and fuel pump relays are mounted externally, but turned on and off by the powertrain control module.

The camshaft and crankshaft signals are sent to the powertrain control module. If the PCM does not receive both signals within approximately one second of engine cranking, it deactivates the ASD and fuel pump relays. When these relays are deactivated, power is shut off to the fuel injectors, ignition coils, fuel pump and the heating element in each oxygen sensor.

The PCM contains a voltage converter that changes battery voltage to a regulated 8.0 volts. The 8.0 volts power the camshaft position sensor, and crankshaft position sensor. The PCM also provides a regulated 5.0 volts supply for the, manifold absolute pressure sensor, throttle position sensor and EGR (if equipped).

The PCM engine control strategy prevents reduced idle speeds until after the engine operates for 320 km (200 miles). If the PCM is replaced after 320 km (200 miles) of usage, update the mileage in new PCM. Use the DRBIII® scan tool to change the mileage in the PCM. Refer to the appropriate Powertrain Diagnostic Manual and the DRBIII® scan tool. If equipped with SKIM, must use SKIM function to program VIN number in new PCM.

POWERTRAIN CONTROL MODULE (Continued)

TRANSMISSION CONTROL (2.4L MODELS ONLY)

CVI CALCULATION

An important function of the PCM is to monitor Clutch Volume Index (CVI). CVIs represent the volume of fluid needed to compress a clutch pack.

The PCM monitors gear ratio changes by monitoring the Input and Output Speed Sensors. The Input, or Turbine Speed Sensor sends an electrical signal to the PCM that represents input shaft rpm. The Output Speed Sensor provides the PCM with output shaft speed information.

By comparing the two inputs, the PCM can determine transaxle gear ratio. This is important to the CVI calculation because the PCM determines CVIs by monitoring how long it takes for a gear change to occur (Fig. 5).

Gear ratios can be determined by using the DRB Scan Tool and reading the Input/Output Speed Sensor values in the “Monitors” display. Gear ratio can be obtained by dividing the Input Speed Sensor value by the Output Speed Sensor value.

For example, if the input shaft is rotating at 1000 rpm and the output shaft is rotating at 500 rpm, then the PCM can determine that the gear ratio is 2:1. In direct drive (3rd gear), the gear ratio changes to 1:1. The gear ratio changes as clutches are applied and released. By monitoring the length of time it takes for the gear ratio to change following a shift request, the PCM can determine the volume of fluid used to apply or release a friction element.

The volume of transmission fluid needed to apply the friction elements are continuously updated for adaptive controls. As friction material wears, the volume of fluid need to apply the element increases.

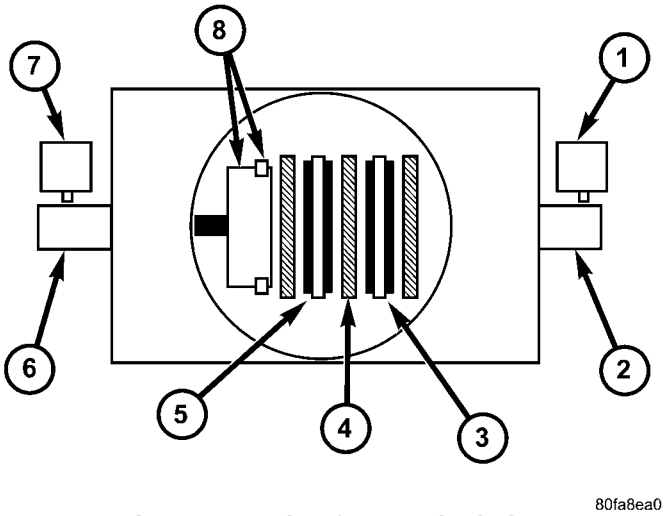

Fig. 5 Example of CVI Calculation

1 - OUTPUT SPEED SENSOR
2 - OUTPUT SHAFT
3 - CLUTCH PACK
4 - SEPARATOR PLATE
5 - FRICTION DISCS
6 - INPUT SHAFT
7 - INPUT SPEED SENSOR
8 - PISTON AND SEAL

Certain mechanical problems within the clutch assemblies (broken return springs, out of position snap rings, excessive clutch pack clearance, improper assembly, etc.) can cause inadequate or out-of-range clutch volumes. Also, defective Input/Output Speed Sensors and wiring can cause these conditions. The following chart identifies the appropriate clutch volumes and when they are monitored/updated:

CLUTCH VOLUMES				
Clutch	When Updated			Proper Clutch Volume
	Shift Sequence	Oil Temperature	Throttle Angle	
L/R	2-1 or 3-1 coast downshift	> 70°	< 5°	35 to 83
2/4	1-2 shift	> 110°	5 - 54°	20 to 77
OD	2-3 shift			48 to 150
UD	4-3 or 4-2 shift		> 5°	24 to 70

SHIFT SCHEDULES

The PCM has programming that allows it to select a variety of shift schedules. Shift schedule selection is dependent on the following:

- Shift lever position
- Throttle position
- Engine load
- Fluid temperature
- Software level

As driving conditions change, the PCM appropriately adjusts the shift schedule. Refer to the following chart to determine the appropriate operation expected, depending on driving conditions.

POWERTRAIN CONTROL MODULE (Continued)

Schedule	Condition	Expected Operation
Extreme Cold	Oil temperature at start-up below -16° F	Park, Reverse, Neutral and 2nd gear only (prevents shifting which may fail a clutch with frequent shifts)
Cold	Oil temperature at start-up above -12° F and below 36° F	– Delayed 2-3 upshift (approximately 22-31 mph) – Delayed 3-4 upshift (45-53 mph) – Early 4-3 costdown shift (approximately 30 mph) – Early 3-2 coastdown shift (approximately 17 mph) – High speed 4-2, 3-2, 2-1 kickdown shifts are prevented – No EMCC
Warm	Oil temperature at start-up above 36° F and below 80 degree F	– Normal operation (upshift, kickdowns, and coastdowns) – No EMCC
Hot	Oil temperature at start-up above 80° F	– Normal operation (upshift, kickdowns, and coastdowns) – Full EMCC, no PEMCC except to engage FEMCC (except at closed throttle at speeds above 70-83 mph)
Overheat	Oil temperature above 240° F or engine coolant temperature above 244° F	– Delayed 2-3 upshift (25-32 mph) – Delayed 3-4 upshift (41-48 mph) – 3rd gear FEMCC from 30-48 mph – 3rd gear PEMCC from 27-31 mph
Super Overheat	Oil temperature above 260° F	– All ″Overheat″ shift schedule features apply – 2nd gear PEMCC above 22 mph – Above 22 mph the torque converter will not unlock unless the throttle is closed or if a wide open throttle 2nd PEMCC to 1 kickdown is made

OPERATION - SENSOR RETURN - PCM INPUT

The sensor return circuit provides a low electrical noise ground reference for all of the systems sensors. The sensor return circuit connects to internal ground circuits within the Powertrain Control Module (PCM).

OPERATION - DATA BUS COMMUNICATION RECEIVE - PCM INPUT

The PCM uses the SCI communication bus to preform engine diagnostics and flash operations. The transmission side of the PCM uses the SCI communication bus to flash new software. However, diagnostics is performed via the vehicles J1850 bus for the transmission side of the PCM.

OPERATION - IGNITION SENSE - PCM INPUT

The ignition sense input informs the Powertrain Control Module (PCM) that the ignition switch is in the crank or run position.

PCM REPLACEMENT

DESCRIPTION

USE THE DRB SCAN TOOL TO REPROGRAM THE NEW PCM WITH THE VEHICLES ORIGI-

POWERTRAIN CONTROL MODULE (Continued)

NAL IDENTIFICATION NUMBER (VIN) AND THE VEHICLES ORIGINAL MILEAGE. IF THIS STEP IS NOT DONE A DIAGNOSTIC TROUBLE CODE (DTC) MAY BE SET.

OPERATION - PCM GROUND

Ground is provided through multiple pins of the PCM connector. Depending on the vehicle there may be as many as two different ground pins. There are power grounds and sensor grounds.

The power grounds are used to control the ground side relays, solenoids, ignition coil or injectors. The signal ground is used for any input that uses sensor return for ground, and the ground side of any internal processing component.

The PCM case is shielded to prevent RFI and EMI. The PCM case is grounded and must be firmly attached to a good, clean body ground.

Internally all grounds are connected together, however there is noise suppression on the sensor ground. For EMI and RFI protection the housing and cover are also grounded separately from the ground pins.

OPERATION

OPERATION - 8-VOLT SUPPLY - PCM OUTPUT - SBEC CONTROLLER

The PCM supplies 8 volts to the crankshaft position sensor, camshaft position sensor.

OPERATION - 5 VOLT SUPPLY - PCM OUTPUT

The PCM supplies 5 volts to the following sensors:

- A/C pressure transducer
- Ambient Temperature sensor
- Battery temperature
- Camshaft Position Sensor (NGC)
- Crankshaft Position Sensor (NGC)
- Electronic Throttle Control (1.6L)
- Engine coolant temperature sensor
- Inlet Air Temperature Sensor
- Knock sensor
- Linear EGR solenoid (if equipped)
- Manifold absolute pressure sensor
- Oil Pressure Switch
- Pedal Position Sensor (1.6L)
- Throttle position sensor
- Vehicle Speed Sensor

STANDARD PROCEDURE

STANDARD PROCEDURE - OBTAINING DIAGNOSTIC TROUBLE CODES

BULB CHECK

Key on: Bulb illuminated until vehicle starts, as long as all once per trip (readiness) monitors completed. If monitors have **not** been completed, then: Key on: bulb check for about 5 to 8 seconds, lamp then flashes if once per trip (readiness) monitors have **not** been completed until vehicle is started, then MIL is extinguished.

OBTAINING DTC'S USING DRB SCAN TOOL

(1) Connect the DRB scan tool to the data link (diagnostic) connector. This connector is located in the passenger compartment; at the lower edge of instrument panel; near the steering column.

(2) Turn the ignition switch on and access the "Read Fault" screen.

(3) Record all the DTC's and "freeze frame" information shown on the DRB scan tool.

(4) To erase DTC's, use the "Erase Trouble Code" data screen on the DRB scan tool. **Do not erase any DTC's until problems have been investigated and repairs have been performed.**

STANDARD PROCEDURE - PINION FACTOR SETTING

NOTE: This procedure must be performed if the PCM/TCM has been replaced with a NEW or replacement unit. Failure to perform this procedure will result in an inoperative or improperly calibrated speedometer.

The vehicle speed readings for the speedometer are taken from the output speed sensor. The PCM/TCM must be calibrated to the different combinations of equipment (final drive and tires) available. Pinion Factor allows the technician to set the Powertrain/Transmission Control Module initial setting so that the speedometer readings will be correct. To properly read and/or reset the Pinion Factor, it is necessary to use a DRBIII® scan tool.

(1) Plug the DRBIII® scan tool into the diagnostic connector located under the instrument panel.

(2) Select the Transmission menu.

(3) Select the Miscellaneous menu.

(4) Select Pinion Factor. Then follow the instructions on the DRBIII® scan tool screen.

POWERTRAIN CONTROL MODULE (Continued)

STANDARD PROCEDURE - QUICK LEARN PROCEDURE

The quick learn procedure requires the use of the DRBIII® scan tool. This program allows the electronic transaxle system to recalibrate itself. This will provide the best possible transaxle operation.

NOTE: The quick learn procedure should be performed if any of the following procedures are performed:

- Transaxle Assembly Replacement
- Transmission Control Module Replacement
- Powertrain Control Module Replacement (NGC-Equipped Models)
- Solenoid/Pressure Switch Assembly Replacement
- Clutch Plate and/or Seal Replacement
- Valve Body Replacement or Recondition

To perform the Quick Learn Procedure, the following conditions must be met:

- The brakes must be applied
- The engine speed must be above 500 rpm
- The throttle angle (TPS) must be less than 3 degrees
- The shift lever position must stay until prompted to shift to overdrive
- The shift lever position must stay in overdrive after the Shift to Overdrive prompt until the DRBIII® indicates the procedure is complete
- The calculated oil temperature must be above 60° and below 200°

(1) Plug the DRBIII® scan tool into the diagnostic connector. The connector is located under the instrument panel.
(2) Go to the Transmission screen.
(3) Go to the Miscellaneous screen.
(4) Select Quick Learn Procedure. Follow the instructions of the DRBIII® to perform the Quick Learn Procedure.

REMOVAL

REMOVAL - SBEC CONTROLLER

USE THE DRBIII® SCAN TOOL TO REPROGRAM THE NEW PCM WITH THE VEHICLES ORIGINAL IDENTIFICATION NUMBER (VIN) AND THE VEHICLES ORIGINAL MILEAGE. IF THIS STEP IS NOT DONE A DIAGNOSTIC TROUBLE CODE (DTC) MAY BE SET.

The PCM engine control strategy prevents reduced idle speeds until after the engine operates for 320 km (200 miles). If the PCM is replaced after 320 km (200 miles) of usage, update the mileage and vehicle identification number (VIN) in the new PCM. Use the DRBIII® scan tool to change the milage and VIN in the PCM. If this step is not done a diagnostic trouble code (DTC) may be set and SKIM must be done or car will not start if it is a SKIM equipped car. If a SKIM car you must do a secret key transfer also. Refer to the appropriate Powertrain Diagnostic Manual and the DRBIII® scan tool.

To avoid possible voltage spike damage to PCM, ignition key must be off, and the negative battery cable must be disconnected before unplugging the PCM connectors. Note radio programs.

(1) Disconnect the negative battery cable.
(2) Remove the air cleaner box.
(3) Disconnect PCM 2 40-way connector (Fig. 6).

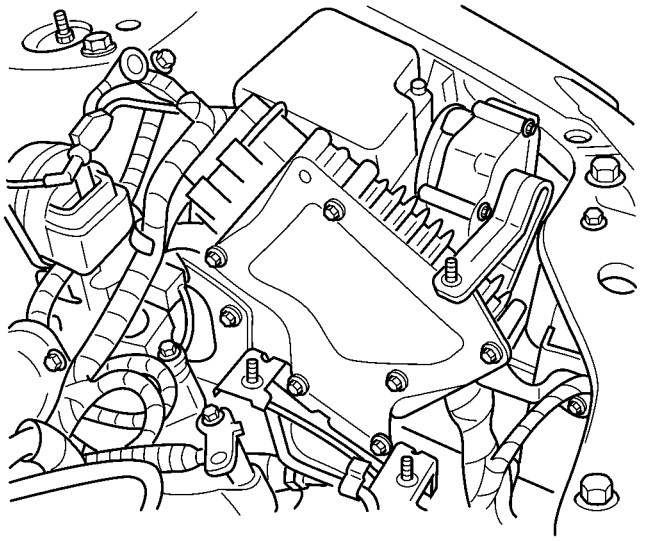

Fig. 6 PCM LOCATION

(4) Reposition wiring harness out of the way.
(5) Remove the 2 bolts and 1 nut and remove PCM and bracket (Fig. 7).

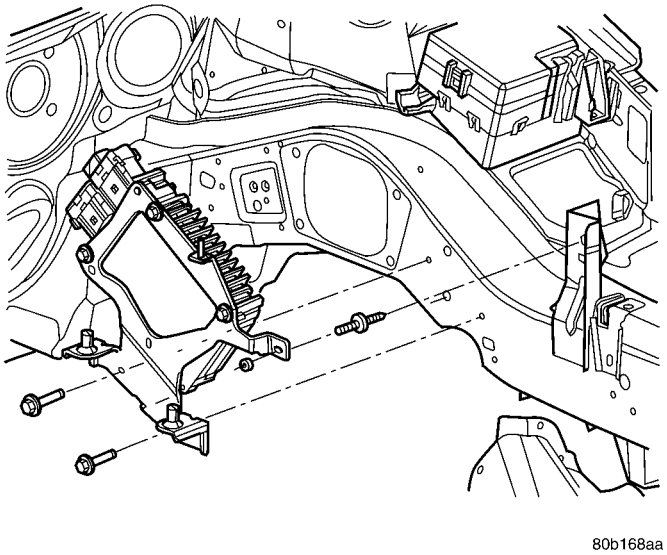

Fig. 7 PCM MOUNTING

POWERTRAIN CONTROL MODULE (Continued)

(6) Remove PCM from bracket (Fig. 8).

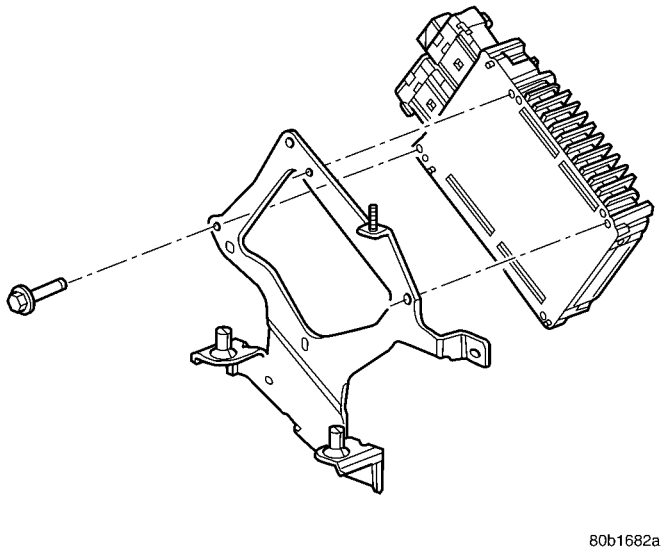

Fig. 8 PCM BRACKET

(7) Remove PCM.

REMOVAL - NGC CONTROLLER

USE THE DRBIII® SCAN TOOL TO REPROGRAM THE NEW PCM WITH THE VEHICLES ORIGINAL IDENTIFICATION NUMBER (VIN) AND THE VEHICLES ORIGINAL MILEAGE. IF THIS STEP IS NOT DONE A DIAGNOSTIC TROUBLE CODE (DTC) MAY BE SET.

The PCM engine control strategy prevents reduced idle speeds until after the engine operates for 320 km (200 miles). If the PCM is replaced after 320 km (200 miles) of usage, update the mileage and vehicle identification number (VIN) in the new PCM. Use the DRBIII® scan tool to change the millage and VIN in the PCM. If this step is not done a diagnostic trouble code (DTC) may be set and SKIM must be done or car will not start if it is a SKIM equipped car. If a SKIM car you must do a secret key transfer also. Refer to the appropriate Powertrain Diagnostic Manual and the DRBIII® scan tool.

To avoid possible voltage spike damage to PCM, ignition key must be off, and the negative battery cable must be disconnected before unplugging the PCM connectors. Note radio programs.

(1) Disconnect the negative battery cable and isolate (Fig. 9).

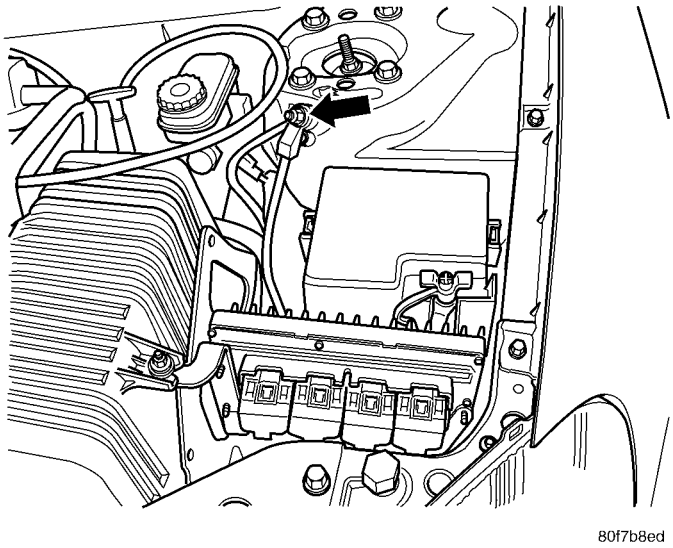

Fig. 9 NEGATIVE BATTERY CABLE

WARNING: If the negative battery cable is not disconnected the possibility of damaging the Powertrain Control Module by contacting the Positive battery cable at the PDC (Fig. 10).

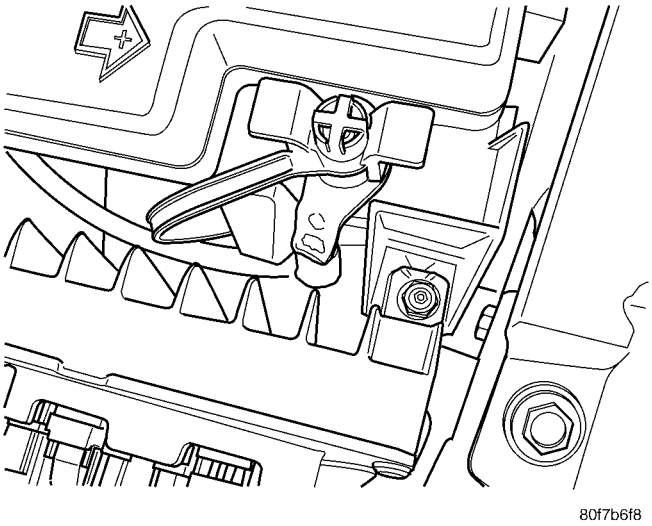

Fig. 10 BATTERY CONNECTION

(2) Remove the 2 nuts holding the PCM and Bracket (Fig. 11).

(3) Unlock and disconnect the electrical connectors at the PCM.

(4) Remove the 3 fasteners holding the PCM to the bracket.

POWERTRAIN CONTROL MODULE (Continued)

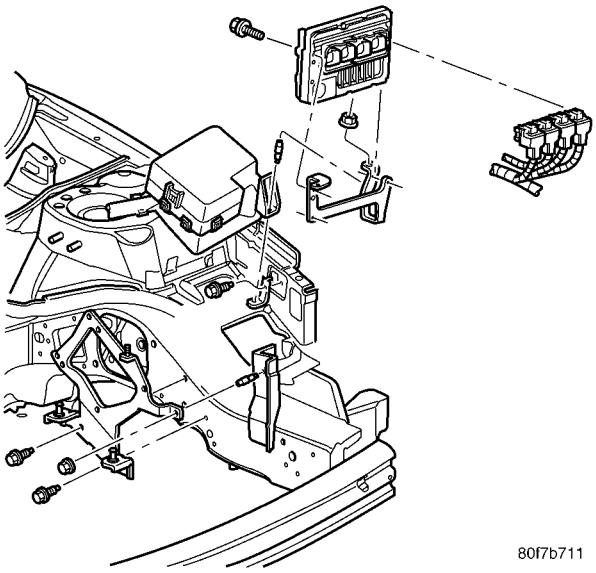

Fig. 11 PCM & BRACKET

INSTALLATION

INSTALLATION - SBEC CONTROLLER

The PCM engine control strategy prevents reduced idle speeds until after the engine operates for 320 km (200 miles). If the PCM is replaced after 320 km (200 miles) of usage, update the mileage and vehicle identification number (VIN) in the new PCM. Use the DRBIII® scan tool to change the millage and VIN in the PCM. If this step is not done a diagnostic trouble code (DTC) may be set and SKIM must be done or car will not start if it is a SKIM equipped car. If a SKIM car you must do a secret key transfer also. Refer to the appropriate Powertrain Diagnostic Manual and the DRBIII® scan tool.

(1) Install PCM to bracket (Fig. 8).

(2) Install PCM and bracket (Fig. 7). Tighten bolt to 4 N·m (35 in. lbs.) torque.

(3) Reposition wiring harness.

(4) Attach 2 40-way connector to PCM (Fig. 6).

(5) Connect negative battery cable and reprogram radio and clock.

(6) Using DRBIII® scan tool, program mileage and vehicle identification number (VIN) into PCM. Refer to the DRBIII® scan tool and the appropriate Powertrain Diagnostic Manual.

INSTALLATION - NGC CONTROLLER

The PCM engine control strategy prevents reduced idle speeds until after the engine operates for 320 km (200 miles). If the PCM is replaced after 320 km (200 miles) of usage, update the mileage and vehicle identification number (VIN) in the new PCM. Use the DRBIII® scan tool to change the millage and VIN in the PCM. If this step is not done a diagnostic trouble code (DTC) may be set and SKIM must be done or car will not start if it is a SKIM equipped car. If a SKIM car you must do a secret key transfer also. Refer to the appropriate Powertrain Diagnostic Manual and the DRBIII® scan tool.

(1) Install PCM to bracket.

(2) Install PCM and bracket to vehicle and connect the electrical connectors and lock connectors.

(3) Install the 2 nuts and tighten.

(4) Connect negative battery cable and reprogram radio and clock.

(5) Using DRBIII® scan tool, program mileage and vehicle identification number (VIN) into PCM. Refer to the DRBIII® scan tool and the appropriate Powertrain Diagnostic Manual.

SENTRY KEY IMMOBILIZER MODULE

DESCRIPTION

The Sentry Key Immobilizer Module (SKIM) contains a Radio Frequency (RF) transceiver and a microprocessor. The SKIM retains in memory the ID numbers of any Sentry Key that is programmed to it. The maximum number of keys that may be programmed to each module is eight (8). The SKIM also communicates over the PCI bus with the Powertrain Control Module (PCM), the Body Control Module (BCM), and the DRB III® scan tool. The SKIM transmits and receives RF signals through a tuned antenna enclosed within a molded plastic ring formation that is integral to the SKIM housing. When the SKIM is properly installed on the steering column, the antenna ring fits snugly around the circumference of the ignition lock cylinder housing. If this ring is not mounted properly, communication problems may arise in the form of transponder-related faults.

For added system security, each SKIM is programmed with a unique ″Secret Key″ code. This code is stored in memory and is sent over the PCI bus to the PCM and to each key that is programmed to work with the vehicle. The ″Secret Key″ code is therefore a common element found in all components of the Sentry Key Immobilizer System (SKIS). In the event that a SKIM replacement is required, the ″Secret Key″ code can be restored from the PCM by following the SKIM replacement procedure found in the DRB III® scan tool. Proper completion of this task will allow the existing ignition keys to be reprogrammed. Therefore, new keys will NOT be needed. In the event that the original ″Secret Key″ code can not be recovered, new ignition keys will be required. The DRB III® scan tool will alert the technician if key replacement is necessary. Another security code, called a PIN, is used to gain secured access to the SKIM for service. The SKIM also stores in its mem-

ory the Vehicle Identification Number (VIN), which it learns through a bus message from the assembly plant tester. The SKIS scrambles the information that is communicated between its components in order to reduce the possibility of unauthorized SKIM access and/or disabling.

OPERATION

When the ignition switch is moved to the RUN position, the SKIM transmits an RF signal to the transponder in the ignition key. The SKIM then waits for a response RF signal from the transponder in the key. If the response received identifies the key as valid, the SKIM sends a ″valid key″ message to the PCM over the PCI bus. If the response received identifies the key as invalid or no response is received from the transponder in the ignition key, the SKIM sends an ″invalid key″ message to the PCM. The PCM will enable or disable engine operation based upon the status of the SKIM messages. It is important to note that the default condition in the PCM is ″invalid key.″ Therefore, if no response is received by the PCM, the engine will be immobilized after two (2) seconds of running.

The SKIM also sends indicator light status messages to the BCM to operate the light. This is the method used to turn the light ON solid or to flash it after the indicator light test is complete to signify a fault in the SKIS. If the light comes ON and stays ON solid after the indicator light test, this signifies that the SKIM has detected a system malfunction and/or that the SKIS has become inoperative. If the SKIM detects an invalid key **OR** a key-related fault exists, the indicator light will flash following the indicator light test. The SKIM may also request an audible chime if the customer key programming feature is available and the procedure is being utilized. Refer to Electrical, Vehicle Theft Security, Transponder Key, Standard Procedure - Transponder Programming.

REMOVAL

WARNING: ON VEHICLES EQUIPPED WITH AIRBAGS, DISABLE THE AIRBAG SYSTEM BEFORE ATTEMPTING ANY STEERING WHEEL, STEERING COLUMN, OR INSTRUMENT PANEL COMPONENT DIAGNOSIS OR SERVICE. DISCONNECT AND ISOLATE THE BATTERY NEGATIVE (GROUND) CABLE, THEN WAIT TWO MINUTES FOR THE AIRBAG SYSTEM CAPACITOR TO DISCHARGE BEFORE PERFORMING FURTHER DIAGNOSIS OR SERVICE. THIS IS THE ONLY SURE WAY TO DISABLE THE AIRBAG SYSTEM. FAILURE TO TAKE THE PROPER PRECAUTIONS COULD RESULT IN ACCIDENTAL AIRBAG DEPLOYMENT AND POSSIBLE PERSONAL INJURY.

(1) Disconnect and isolate the battery negative remote cable.

(2) Remove knee bolster (Refer to 23 - BODY/INSTRUMENT PANEL/INSTRUMENT PANEL ASSEMBLY - REMOVAL).

(3) Remove the steering column upper and lower shrouds (Refer to 23 - BODY/INSTRUMENT PANEL/STEERING COLUMN OPENING COVER - REMOVAL).

(4) Disengage the steering column wire harness from the Sentry Key Immobilizer Module (SKIM).

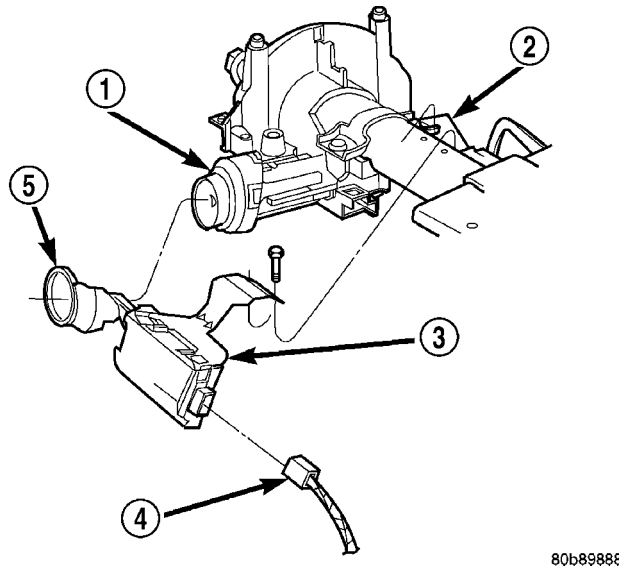

Fig. 12 SKIM Remove/Install

1 - IGNITION KEY CYLINDER
2 - STEERING COLUMN
3 - SENTRY KEY IMMOBILIZER MODULE (SKIM)
4 - SKIM CONNECTOR
5 - SKIM ANTENNA

(5) Remove the two screws securing the SKIM module to the top of the steering column.

(6) Rotate the SKIM and its mounting bracket upwards and then to the side away from the steering column to slide the SKIM antenna ring from around the ignition switch lock cylinder housing.

(7) Remove the SKIM from the vehicle.

INSTALLATION

(1) If the SKIM is replaced with a new unit, a DRB lll® scan tool MUST be used to initialize the new SKIM and to program at least two Sentry Key transponders. (Refer to 8 - ELECTRICAL/VEHICLE THEFT SECURITY - STANDARD PROCEDURE) Sentry Key Immobilizer Module Initialization.

(2) Carefully position the SKIM, the mounting bracket and the antenna ring onto the steering column.

SENTRY KEY IMMOBILIZER MODULE (Continued)

(3) Install the two retaining screws (Fig. 12).
(4) Connect the wire harness connector.
(5) Install the steering column upper and lower shrouds (Refer to 23 - BODY/INSTRUMENT PANEL/STEERING COLUMN OPENING COVER - INSTALLATION).
(6) Install the knee bolster (Refer to 23 - BODY/INSTRUMENT PANEL/INSTRUMENT PANEL ASSEMBLY - INSTALLATION).
(7) Connect the battery negative remote cable.

TRANSMISSION CONTROL MODULE

DESCRIPTION

The Transmission Control Module (TCM) is located between the Power Distribution Center (PDC) and the left headlamp assembly, in the left side of the engine compartment (Fig. 13).

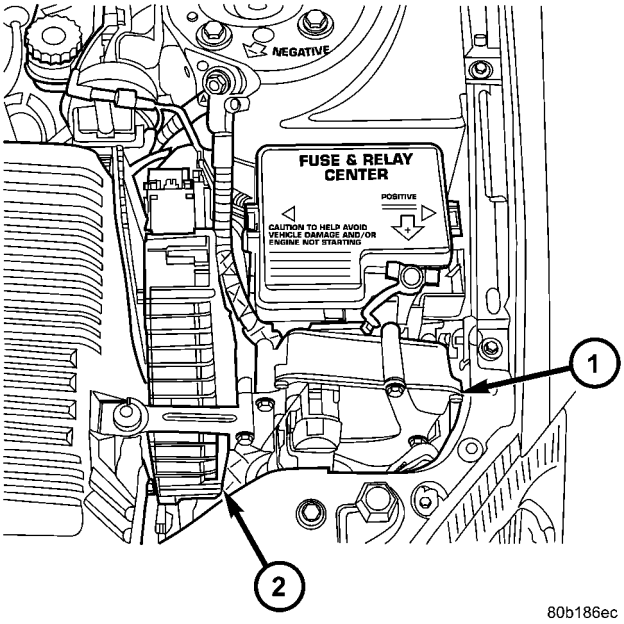

Fig. 13 Transmission Control Module Location—2.4L Models

1 - TRANSMISSION CONTROL MODULE (TCM)
2 - POWERTRAIN CONTROL MODULE (PCM)

OPERATION

The TCM is the controlling unit for all electronic operations of the transaxle. The TCM receives information regarding vehicle operation from both direct and indirect inputs, and selects the operational mode of the transaxle. Direct inputs are hardwired to, and used specifically by the TCM. Indirect inputs originate from other components/modules, and are shared with the TCM via the J1850 communication bus.

Some examples of **direct inputs** to the TCM are:
- Battery (B+) voltage
- Ignition “ON” voltage
- Transmission Control Relay (Switched B+)
- Throttle Position Sensor
- Crankshaft Position Sensor (CKP)
- Transmission Range Sensor (TRS)
- Pressure Switches (L/R, 2/4, OD)
- Transmission Temperature Sensor (Integral to TRS)
- Input Shaft Speed Sensor
- Output Shaft Speed Sensor

Some examples of **indirect inputs** to the TCM are:
- Engine/Body Identification
- Manifold Pressure
- Target Idle
- Torque Reduction Confirmation
- Speed Control ON/OFF Switch
- Engine Coolant Temperature
- Ambient/Battery Temperature
- Brake Switch Status
- DRB Communication

Based on the information received from these various inputs, the TCM determines the appropriate shift schedule and shift points, depending on the present operating conditions and driver demand. This is possible through the control of various direct and indirect outputs.

Some examples of TCM **direct outputs** are:
- Transmission Control Relay
- Solenoids (LR/CC, 2/4, OD and UD)
- Vehicle Speed (to PCM)
- Torque Reduction Request (to PCM)

An example of a TCM **indirect output** is:
- Transmission Temperature (to PCM)

In addition to monitoring inputs and controlling outputs, the TCM has other important responsibilities and functions:
- Storing and maintaining Clutch Volume Indices (CVI)
- Storing and selecting appropriate Shift Schedules
- System self-diagnostics
- Diagnostic capabilities (with DRB scan tool)

CLUTCH VOLUME INDEX (CVI)

An important function of the TCM is to monitor Clutch Volume Index (CVI). CVIs represent the volume of fluid needed to compress a clutch pack.

The TCM monitors gear ratio changes by monitoring the Input and Output Speed Sensors. The Input, or Turbine Speed Sensor sends an electrical signal to the TCM that represents input shaft rpm. The Output Speed Sensor provides the TCM with output shaft speed information.

TRANSMISSION CONTROL MODULE (Continued)

By comparing the two inputs, the TCM can determine transaxle gear ratio. This is important to the CVI calculation because the TCM determines CVIs by monitoring how long it takes for a gear change to occur (Fig. 14).

Gear ratios can be determined by using the DRB Scan Tool and reading the Input/Output Speed Sensor values in the “Monitors” display. Gear ratio can be obtained by dividing the Input Speed Sensor value by the Output Speed Sensor value.

For example, if the input shaft is rotating at 1000 rpm and the output shaft is rotating at 500 rpm, then the TCM can determine that the gear ratio is 2:1. In direct drive (3rd gear), the gear ratio changes to 1:1. The gear ratio changes as clutches are applied and released. By monitoring the length of time it takes for the gear ratio to change following a shift request, the TCM can determine the volume of fluid used to apply or release a friction element.

The volume of transmission fluid needed to apply the friction elements are continuously updated for adaptive controls. As friction material wears, the volume of fluid need to apply the element increases.

Certain mechanical problems within the clutch assemblies (broken return springs, out of position snap rings, excessive clutch pack clearance, improper assembly, etc.) can cause inadequate or out-of-range clutch volumes. Also, defective Input/Output Speed Sensors and wiring can cause these conditions. The following chart identifies the appropriate clutch volumes and when they are monitored/updated:

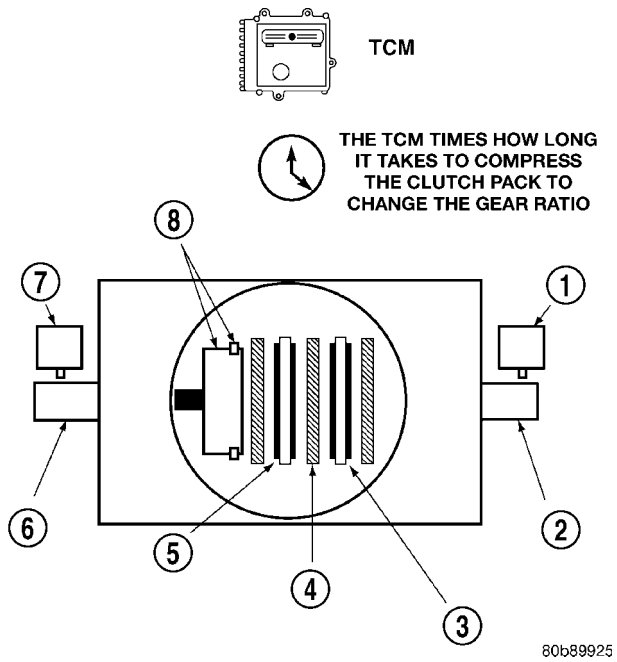

Fig. 14 Example of CVI Calculation

1 - OUTPUT SPEED SENSOR
2 - OUTPUT SHAFT
3 - CLUTCH PACK
4 - SEPARATOR PLATE
5 - FRICTION DISCS
6 - INPUT SHAFT
7 - INPUT SPEED SENSOR
8 - PISTON AND SEAL

CLUTCH VOLUMES				
Clutch	When Updated			Proper Clutch Volume
	Shift Sequence	Oil Temperature	Throttle Angle	
L/R	2-1 or 3-1 coast downshift	> 70°	< 5°	35 to 83
2/4	1-2 shift	> 110°	5 - 54°	20 to 77
OD	2-3 shift			48 to 150
UD	4-3 or 4-2 shift		> 5°	24 to 70

SHIFT SCHEDULES

As mentioned earlier, the TCM has programming that allows it to select a variety of shift schedules. Shift schedule selection is dependent on the following:

- Shift lever position
- Throttle position
- Engine load
- Fluid temperature
- Software level

As driving conditions change, the TCM appropriately adjusts the shift schedule. Refer to the following chart to determine the appropriate operation expected, depending on driving conditions.

TRANSMISSION CONTROL MODULE (Continued)

Schedule	Condition	Expected Operation
Extreme Cold	Oil temperature at start-up below -16° F	Park, Reverse, Neutral and 2nd gear only (prevents shifting which may fail a clutch with frequent shifts)
Cold	Oil temperature at start-up above -12° F and below 36° F	– Delayed 2-3 upshift (approximately 22-31 mph) – Delayed 3-4 upshift (45-53 mph) – Early 4-3 costdown shift (approximately 30 mph) – Early 3-2 coastdown shift (approximately 17 mph) – High speed 4-2, 3-2, 2-1 kickdown shifts are prevented – No EMCC
Warm	Oil temperature at start-up above 36° F and below 80 degree F	– Normal operation (upshift, kickdowns, and coastdowns) – No EMCC
Hot	Oil temperature at start-up above 80° F	– Normal operation (upshift, kickdowns, and coastdowns) – Full EMCC, no PEMCC except to engage FEMCC (except at closed throttle at speeds above 70-83 mph)
Overheat	Oil temperature above 240° F or engine coolant temperature above 244° F	– Delayed 2-3 upshift (25-32 mph) – Delayed 3-4 upshift (41-48 mph) – 3rd gear FEMCC from 30-48 mph – 3rd gear PEMCC from 27-31 mph
Super Overheat	Oil temperature above 260° F	– All ″Overheat″ shift schedule features apply – 2nd gear PEMCC above 22 mph – Above 22 mph the torque converter will not unlock unless the throttle is closed or if a wide open throttle 2nd PEMCC to 1 kickdown is made

STANDARD PROCEDURE

STANDARD PROCEDURE - PINION FACTOR SETTING

NOTE: This procedure must be performed if the PCM/TCM has been replaced with a NEW or replacement unit. Failure to perform this procedure will result in an inoperative or improperly calibrated speedometer.

The vehicle speed readings for the speedometer are taken from the output speed sensor. The PCM/TCM must be calibrated to the different combinations of equipment (final drive and tires) available. Pinion Factor allows the technician to set the Powertrain/Transmission Control Module initial setting so that the speedometer readings will be correct. To properly read and/or reset the Pinion Factor, it is necessary to use a DRBIII® scan tool.

(1) Plug the DRBIII® scan tool into the diagnostic connector located under the instrument panel.

(2) Select the Transmission menu.

(3) Select the Miscellaneous menu.

(4) Select Pinion Factor. Then follow the instructions on the DRBIII® scan tool screen.

TRANSMISSION CONTROL MODULE (Continued)

STANDARD PROCEDURE - QUICK LEARN PROCEDURE

The quick learn procedure requires the use of the DRBIII® scan tool. This program allows the electronic transaxle system to recalibrate itself. This will provide the best possible transaxle operation.

NOTE: The quick learn procedure should be performed if any of the following procedures are performed:

- Transaxle Assembly Replacement
- Transmission Control Module Replacement
- Powertrain Control Module Replacement (NGC-Equipped Models)
- Solenoid/Pressure Switch Assembly Replacement
- Clutch Plate and/or Seal Replacement
- Valve Body Replacement or Recondition

To perform the Quick Learn Procedure, the following conditions must be met:

- The brakes must be applied
- The engine speed must be above 500 rpm
- The throttle angle (TPS) must be less than 3 degrees
- The shift lever position must stay until prompted to shift to overdrive
- The shift lever position must stay in overdrive after the Shift to Overdrive prompt until the DRBIII® indicates the procedure is complete
- The calculated oil temperature must be above 60° and below 200°

(1) Plug the DRBIII® scan tool into the diagnostic connector. The connector is located under the instrument panel.

(2) Go to the Transmission screen.

(3) Go to the Miscellaneous screen.

(4) Select Quick Learn Procedure. Follow the instructions of the DRBIII® to perform the Quick Learn Procedure.

REMOVAL

NOTE: If the transmission control module (TCM) is being replaced with a new or replacement unit, the Pinion Factor and Quick Learn procedures must be performed. (Refer to 8 - ELECTRICAL/ELECTRONIC CONTROL MODULES/TRANSMISSION CONTROL MODULE - STANDARD PROCEDURE) (Refer to 8 - ELECTRICAL/ELECTRONIC CONTROL MODULES/ TRANSMISSION CONTROL MODULE - STANDARD PROCEDURE)

(1) Disconnect battery negative cable at strut tower.

(2) Remove air cleaner assembly and transmission control module (TCM)-to-powertrain control module (PCM) bracket nut.

(3) Partially remove air cleaner assembly to clear PCM bracket stud.

(4) Remove TCM-to-PDC bracket screw (Fig. 15).

(5) Partially remove TCM/mounting bracket assembly and disconnect TCM 60-way connector.

(6) Remove TCM/mounting bracket assembly (Fig. 15).

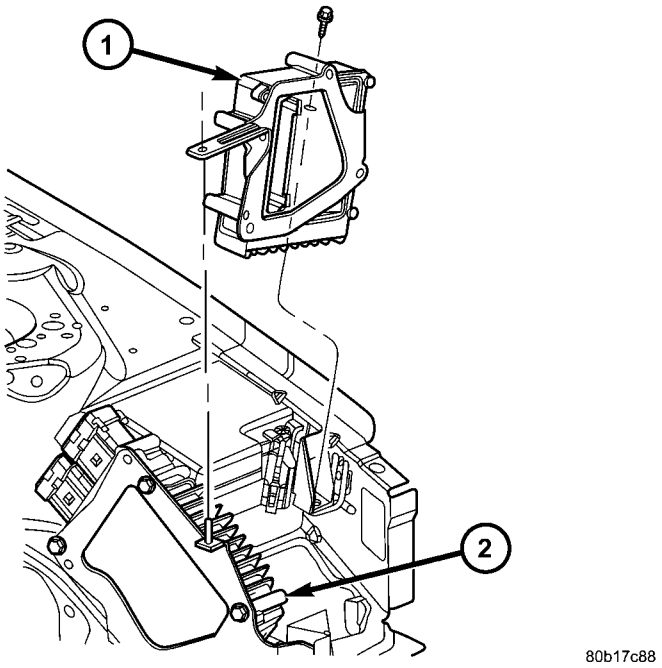

Fig. 15 TCM/Bracket Assembly

1 - TCM/MOUNTING BRACKET
2 - POWERTRAIN CONTROL MODULE (PCM)

(7) Remove TCM mounting bracket from TCM (Fig. 16).

INSTALLATION

NOTE: If transmission control module is being replaced with a new or replacement unit, the Pinion Factor and Quick Learn procedures must be performed. (Refer to 8 - ELECTRICAL/ELECTRONIC CONTROL MODULES/TRANSMISSION CONTROL MODULE - STANDARD PROCEDURE) (Refer to 8 - ELECTRICAL/ELECTRONIC CONTROL MODULES/ TRANSMISSION CONTROL MODULE - STANDARD PROCEDURE)

TRANSMISSION CONTROL MODULE (Continued)

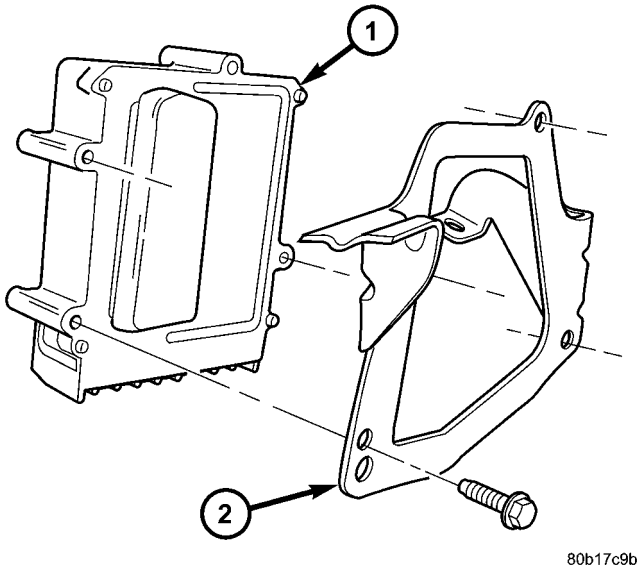

Fig. 16 TCM and Mounting Bracket

1 - TRANSMISSION CONTROL MODULE (TCM)
2 - MOUNTING BRACKET

(1) Install TCM mounting bracket to TCM (Fig. 16) and torque screws to 11 N·m (72 in. lbs.).

(2) Install TCM 60-way connector and torque to 4 N·m (35 in. lbs.).

(3) Install TCM/bracket into position (Fig. 15).

(4) Install and torque TCM bracket-to-PDC bracket mounting screw to 5 N·m (40 in. lbs.).

(5) Install air cleaner assembly into position.

(6) Install and torque air cleaner-to-PCM stud nut to 5 N·m (40 in. lbs.).

(7) Connect battery negative cable.

ENGINE SYSTEMS

TABLE OF CONTENTS

page

BATTERY SYSTEM 1
CHARGING 18
STARTING 24

BATTERY SYSTEM

TABLE OF CONTENTS

page

BATTERY SYSTEM
DESCRIPTION 1
OPERATION 2
DIAGNOSIS AND TESTING - BATTERY SYSTEM 2
CLEANING 5
INSPECTION 5
SPECIFICATIONS
BATTERY SPECIFICATIONS 5
SPECIAL TOOLS
BATTERY SYSTEM SPECIAL TOOLS 6
BATTERY
DESCRIPTION 6
OPERATION 7
DIAGNOSIS AND TESTING - BATTERY 7
STANDARD PROCEDURE
STANDARD PROCEDURE - USING MICRO 420 BATTERY TESTER 7
STANDARD PROCEDURE - BATTERY CHARGING 8
STANDARD PROCEDURE - OPEN-CIRCUIT VOLTAGE TEST 10
STANDARD PROCEDURE - IGNITION-OFF DRAW TEST 11
REMOVAL 12
INSTALLATION 12
BATTERY HOLDDOWN
DESCRIPTION 12
OPERATION 12
REMOVAL 12
INSTALLATION 13
BATTERY CABLES
DESCRIPTION 13
OPERATION 13
DIAGNOSIS AND TESTING - BATTERY CABLES 14
REMOVAL 15
INSTALLATION 15
BATTERY TRAY
DESCRIPTION 15
OPERATION 15
REMOVAL 16
INSTALLATION 16
BATTERY HEATER BLANKET
DESCRIPTION 16
OPERATION 17
DIAGNOSIS AND TESTING - BATTERY HEATER BLANKET 17
REMOVAL 17
INSTALLATION 17

BATTERY SYSTEM

DESCRIPTION

A single 12-volt battery is standard factory-installed equipment on this model. All of the components of the battery system are located in the front of the vehicle, just ahead of the left front wheel and tire assembly. The battery system for this vehicle covers the following related components, which are covered in further detail later in this section of the service manual:

- **Battery** - The storage battery provides a reliable means of storing a renewable source of electrical energy within the vehicle.
- **Battery Cables** - The battery cables connect the batteries positive and negative terminals to the vehicle electrical system.
- **Battery Hold-down** - The battery hold-down hardware secures the battery in the battery tray.

BATTERY SYSTEM (Continued)

- **Battery Heater Blanket** - The battery heater blanket is used to improve battery cold start ability.
- **Battery Tray** - The battery tray provides a secure mounting location in the vehicle for the battery and in some applications, an anchor point for the battery hold-down hardware.

For battery system maintenance schedules and jump starting procedure, see the owner's manual in the vehicle glove box. Optionally, refer to the Lubrication and Maintenance section of the service manual for the recommended battery maintenance schedules and for the proper battery jump starting procedure. While battery charging can be considered a maintenance procedure, the battery charging procedure and related information are located later in this section of this service manual.

OPERATION

The battery system is designed to provide a safe, efficient, reliable and mobile means of delivering and storing electrical energy. This electrical energy is required to operate the engine starting system, as well as to operate many of the other vehicle accessory systems for limited durations while the engine and/or the charging system are not operating. The battery system is also designed to provide a reserve of electrical energy to supplement the charging system for short durations while the engine is running and the electrical current demands of the vehicle exceed the output of the charging system. In addition to delivering, and storing electrical energy for the vehicle, the battery system serves as a capacitor and voltage stabilizer for the vehicle electrical system. It absorbs most abnormal or transient voltages caused by the switching of any of the electrical components or circuits in the vehicle.

DIAGNOSIS AND TESTING - BATTERY SYSTEM

The battery, starting, and charging systems in the vehicle operate with one another and must be tested as a single complete system. In order for the engine to start and the battery to charge properly, all of the components that are used in these systems must perform within specifications. It is important that the battery, starting, and charging systems be thoroughly tested and inspected any time a battery needs to be charged or replaced. The cause of abnormal battery discharge, overcharging or early battery failure must be diagnosed and corrected before a battery is replaced and before a vehicle is returned to service. The service information for these systems has been separated within this service manual to make it easier to locate the specific information you are seeking. However, when attempting to diagnose any of these systems, it is important that you keep their interdependency in mind.

The diagnostic procedures used for the battery, starting, and charging systems include the most basic conventional diagnostic methods, to the more sophisticated On-Board Diagnostics (OBD) built into the Powertrain Control Module (PCM). Use of an induction-type milliampere ammeter, a volt/ohmmeter, a battery charger, a carbon pile rheostat (load tester) and a 12-volt test lamp may be required. All OBD-sensed systems are monitored by the PCM. Each monitored circuit is assigned a Diagnostic Trouble Code (DTC). The PCM will store a DTC in electronic memory for any failure it detects. Refer to Charging System for the proper charging system on-board diagnostic test procedures.

MICRO 420 BATTERY TESTER

The Micro 420 automotive battery tester is designed to help the dealership technicians diagnose the cause of a defective battery. Follow the instruction manual supplied with the tester to properly diagnose a vehicle. If the instruction manual is not available refer to the standard procedure in this section, which includes the directions for using the Micro 420 battery tester.

BATTERY SYSTEM (Continued)

BATTERY SYSTEM DIAGNOSIS		
CONDITION	POSSIBLE CAUSES	CORRECTION
THE BATTERY SEEMS WEAK OR DEAD WHEN ATTEMPTING TO START THE ENGINE.	1. The battery has an incorrect size or rating for this vehicle.	1. Refer to Battery Specifications for the proper size and rating. Replace an incorrect battery, as required.
	2. The battery is physically damaged.	2. Inspect the battery for loose terminal posts or a cracked and leaking case. Replace the damaged battery, as required.
	3. The battery terminal connections are loose or corroded.	3. Refer to Battery Cable for the proper cable diagnosis and testing procedures. Clean and tighten the battery terminal connections, as required.
	4. The battery is discharged.	4. Determine the battery state-of-charge. Refer to Standard Procedures for the proper test procedures. Charge the faulty battery, as required.
	5. The electrical system ignition-off draw is excessive.	5. Refer to Standard Procedures for the proper test procedures. Repair the faulty electrical system, as required.
	6. The battery is faulty.	6. Determine the battery cranking capacity. Refer to Standard Procedures for the test procedures. Replace the faulty battery, as required.
	7. The starting system is faulty.	7. Determine if the starting system is performing to specifications. Refer to Starting System for the proper starting system diagnosis and testing procedures. Repair the faulty starting system, as required.
	8. The charging system is faulty.	8. Determine if the charging system is performing to specifications. Refer to Charging System for the proper charging system diagnosis and testing procedures. Repair the faulty charging system, as required.

BATTERY SYSTEM (Continued)

BATTERY SYSTEM DIAGNOSIS		
CONDITION	POSSIBLE CAUSES	CORRECTION
THE BATTERY STATE OF CHARGE CANNOT BE MAINTAINED.	1. The battery has an incorrect size or rating for this vehicle.	1. Refer to Battery Specifications for the proper specifications. Replace an incorrect battery, as required.
	2. The battery terminal connections are loose or corroded.	2. Refer to Battery Cable for the proper cable diagnosis and testing procedures. Clean and tighten the battery terminal connections, as required.
	3. The generator drive belt is slipping.	3. Refer to Cooling System for the proper accessory drive belt diagnosis and testing procedures. Replace or adjust the faulty generator drive belt, as required.
	4. The electrical system ignition-off draw is excessive.	4. Refer to Standard Procedures for the proper test procedures. Repair the faulty electrical system, as required.
	5. The battery is faulty.	5. Determine the battery cranking capacity. Refer to Standard Procedures for the proper test procedures. Replace the faulty battery, as required.
	6. The starting system is faulty.	6. Determine if the starting system is performing to specifications. Refer to Starting System for the proper starting system diagnosis and testing procedures. Repair the faulty starting system, as required.
	7. The charging system is faulty.	7. Determine if the charging system is performing to specifications. Refer to Charging System for the proper charging system diagnosis and testing procedures. Repair the faulty charging system, as required.
	8. Electrical loads exceed the output of the charging system.	8. Inspect the vehicle for aftermarket electrical equipment which might cause excessive electrical loads.
	9. Slow driving or prolonged idling with high-amperage draw systems in use.	9. Advise the vehicle operator, as required.
THE BATTERY WILL NOT ACCEPT A CHARGE.	1. The battery is faulty.	1. Refer to Standard Procedures for the proper battery charging procedures. Charge or replace the faulty battery, as required.

ABNORMAL BATTERY DISCHARGING

Any of the following conditions can result in abnormal battery discharging:

1. Corroded or loose battery posts and terminal clamps.
2. A loose or worn generator drive belt.
3. Electrical loads that exceed the output of the charging system. This can be due to equipment installed after manufacture, or repeated short trip use.
4. Slow driving speeds (heavy traffic conditions) or prolonged idling, with high-amperage draw systems in use.
5. A faulty circuit or component causing excessive ignition-off draw.
6. A faulty or incorrect charging system component. Refer to Charging System for the proper charging system diagnosis and testing procedures.

BATTERY SYSTEM (Continued)

7. A faulty or incorrect starting system component. Refer to Starting System for the proper starting system diagnosis and testing procedures.

8. A faulty or incorrect battery. Refer to Standard Procedures for the proper battery diagnosis and testing procedures. Refer to Battery System Specifications for the proper specifications.

CLEANING

The following information details the recommended cleaning procedures for the battery and related components. In addition to the maintenance schedules found in this service manual and the owner's manual, it is recommended that these procedures be performed any time the battery or related components must be removed for vehicle service.

(1) Clean the battery cable terminals of all corrosion. Remove any corrosion using a wire brush or cleaning tool, and a sodium bicarbonate (baking soda) and warm water cleaning solution.

(2) Clean the battery tray and battery holddown hardware of all corrosion. Remove any corrosion using a wire brush and a sodium bicarbonate (baking soda) and warm water cleaning solution. Paint any exposed bare metal.

(3) If the removed battery is to be reinstalled, clean the outside of the battery case and the top cover with a sodium bicarbonate (baking soda) and warm water cleaning solution using a stiff bristle parts cleaning brush to remove any acid film (Fig. 1). Rinse the battery with clean water. Ensure that the cleaning solution does not enter the battery cells through the vent holes. If the battery is being replaced, refer to Battery System Specifications for the factory-installed battery specifications. Confirm that the replacement battery is the correct size and has the correct ratings for the vehicle.

(4) If equipped, clean the battery heater blanket with a sodium bicarbonate (baking soda) and warm water cleaning solution using a stiff bristle parts cleaning brush to remove any acid film.

(5) Clean any corrosion from the battery terminals with a wire brush or terminal cleaner, and a sodium bicarbonate (baking soda) and warm water cleaning solution.

INSPECTION

The following information details the recommended inspection procedures for the battery and related components. In addition to the maintenance schedules found in this service manual and the owner's manual, it is recommended that these procedures be performed any time the battery or related components must be removed for vehicle service.

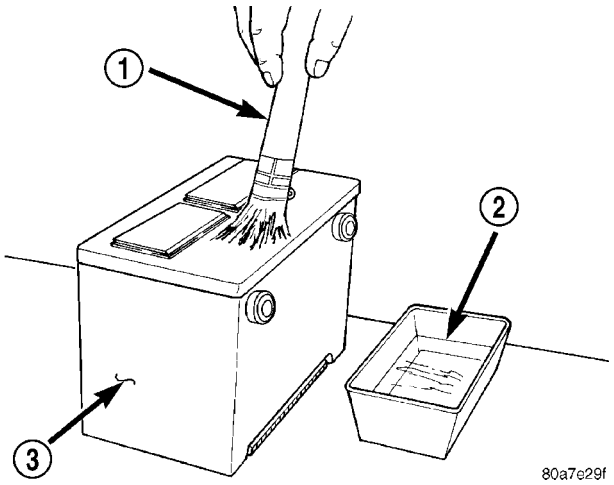

Fig. 1 Cleaning Battery

1 - CLEANING BRUSH
2 - WARM WATER AND BAKING SODA SOLUTION
3 - BATTERY

(1) Inspect the battery cable terminals for damage. Replace any battery cable that has a damaged or deformed terminal.

(2) Inspect the battery tray and battery hold down hardware for damage. Replace any damaged parts.

(3) If equipped, slide the battery heater blanket off of the battery case. Inspect the battery case for cracks or other damage that could result in electrolyte leaks. Also, check the battery terminals for looseness. Batteries with damaged cases or loose terminals must be replaced.

(4) If equipped, inspect the battery heater blanket for tears, cracks, deformation or other damage. Replace any battery heater blanket that has been damaged.

(5) If equipped, inspect the battery built-in test indicator sight glass for an indication of the battery condition. If the battery is discharged, charge as required. Refer to Standard Procedures for the proper battery built-in indicator test procedures. Also refer to Standard Procedures for the proper battery charging procedures.

SPECIFICATIONS

BATTERY SPECIFICATIONS

The battery Group Size number, the Cold Cranking Amperage (CCA) rating, and the Reserve Capacity (RC) rating or Ampere-Hours (AH) rating can be found on the original equipment battery label. Be certain that a replacement battery has the correct Group Size number, as well as CCA, and RC or AH ratings that equal or exceed the original equipment specification for the vehicle being serviced. Battery sizes and ratings are discussed in more detail below.

BATTERY SYSTEM (Continued)

• **Group Size** - The outside dimensions and terminal placement of the battery conform to standards established by the Battery Council International (BCI). Each battery is assigned a BCI Group Size number to help identify a correctly-sized replacement.

• **Cold Cranking Amperage** - The Cold Cranking Amperage (CCA) rating specifies how much current (in amperes) the battery can deliver for thirty seconds at -18° C (0° F). Terminal voltage must not fall below 7.2 volts during or after the thirty second discharge period. The CCA required is generally higher as engine displacement increases, depending also upon the starter current draw requirements.

• **Reserve Capacity** - The Reserve Capacity (RC) rating specifies the time (in minutes) it takes for battery terminal voltage to fall below 10.5 volts, at a discharge rate of 25 amperes. RC is determined with the battery fully-charged at 26.7° C (80° F). This rating estimates how long the battery might last after a charging system failure, under minimum electrical load.

• **Ampere-Hours** - The Ampere-Hours (AH) rating specifies the current (in amperes) that a battery can deliver steadily for twenty hours, with the voltage in the battery not falling below 10.5 volts. This rating is also sometimes identified as the twenty-hour discharge rating.

BATTERY SPECIFICATIONS & RATINGS					
Part Number	BCI Group Size Classification	Cold Cranking Amperage	Reserve Capacity	Ampere - Hours	Load Test Amperage
N/A	75	510	110 Minutes	57	260

SPECIAL TOOLS

BATTERY SYSTEM SPECIAL TOOLS

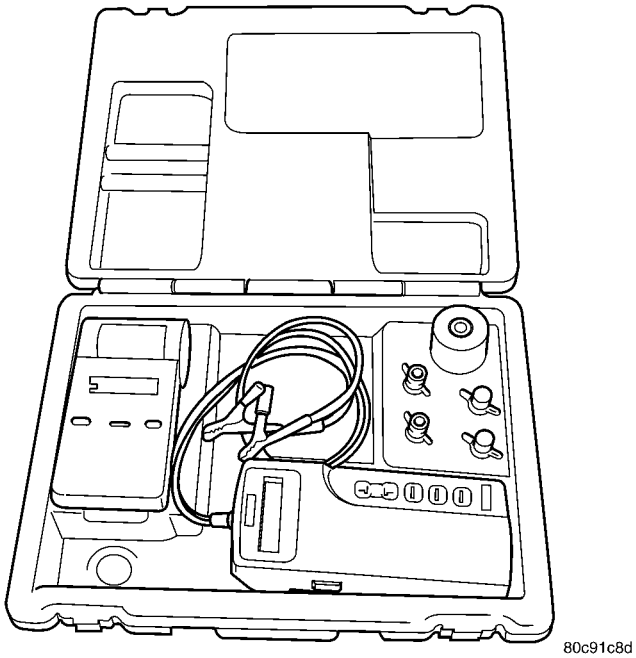

Micro 420 Battery Tester

BATTERY

DESCRIPTION

Maintenance-free batteries have non-removable battery vent caps (Fig. 2). Water cannot be added to this battery. Under normal service the composition of this battery reduces gassing and water loss at normal charge rates. If the battery electrolyte level becomes low, this battery must be replaced.

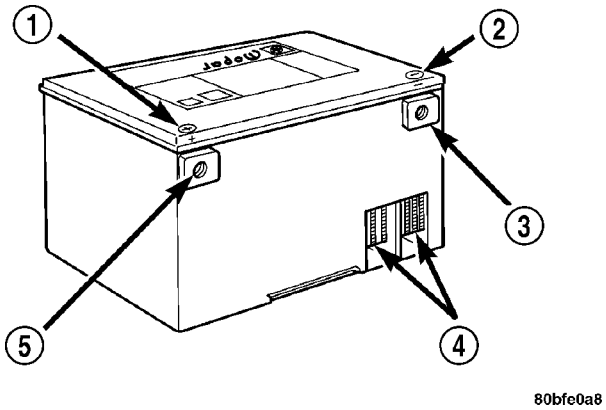

Fig. 2 JR Battery

1 - (+) POLARITY SYMBOL
2 - (–) POLARITY SYMBOL
3 - NEGATIVE TERMINAL
4 - INTERNAL BATTERY PLATES
5 - POSITIVE TERMINAL

The battery is a device used to store electrical energy potential in a chemical form. When an electrical load is applied to the battery terminals, an electrochemical reaction occurs within the battery. This reaction causes the battery to discharge electrical current.

The battery is made up of six individual cells that are connected in series. Each cell contains positive charged plate groups made of lead oxide, and negatively charged plate groups made of sponge lead. The dissimilar metal plates are submerged in a sulfuric acid and water solution called an electrolyte.

BATTERY (Continued)

OPERATION

The battery is designed to store electrical energy in a chemical form. When an electrical load is applied to the terminals of the battery, an electrochemical reaction occurs. This reaction causes the battery to discharge electrical current from its terminals. As the battery discharges, a gradual chemical change takes place within each cell. The sulfuric acid in the electrolyte combines with the plate materials, causing both plates to slowly change to lead sulfate. At the same time, oxygen from the positive plate material combines with hydrogen from the sulfuric acid, causing the electrolyte to become mainly water. The chemical changes within the battery are caused by the movement of excess or free electrons between the positive and negative plate groups. This movement of electrons produces a flow of electrical current through the load device attached to the battery terminals.

As the plate materials become more similar chemically, and the electrolyte becomes less acid, the voltage potential of each cell is reduced. However, by charging the battery with a voltage higher than that of the battery itself, the battery discharging process is reversed. Charging the battery gradually changes the sulfated lead plates back into sponge lead and lead dioxide, and the water back into sulfuric acid. This action restores the difference in the electron charges deposited on the plates, and the voltage potential of the battery cells. For a battery to remain useful, it must be able to produce high-amperage current over an extended period. A battery must also be able to accept a charge, so that its voltage potential may be restored.

The battery is vented to release excess hydrogen gas that is created when the battery is being charged or discharged. However, even with these vents, hydrogen gas can collect in or around the battery. If hydrogen gas is exposed to flame or sparks, it may ignite. If the electrolyte level is low, the battery may arc internally and explode. If the battery is equipped with removable cell caps, add distilled water whenever the electrolyte level is below the top of the plates. If the battery cell caps cannot be removed, the battery must be replaced if the electrolyte level becomes low.

DIAGNOSIS AND TESTING - BATTERY

The battery must be completely charged and the terminals should be properly cleaned and inspected before diagnostic procedures are performed. Refer to Battery System Cleaning for the proper cleaning procedures, and Battery System Inspection for the proper battery inspection procedures. Refer to Standard Procedures for the proper battery charging procedures.

MICRO 420 BATTERY TESTER

The Micro 420 automotive battery tester is designed to help the dealership technicians diagnose the cause of a defective battery. Follow the instruction manual supplied with the tester to properly diagnose a vehicle. If the instruction manual is not available refer to the standard procedure in this section, which includes the directions for using the Micro 420 electrical system tester.

WARNING: IF THE BATTERY SHOWS SIGNS OF FREEZING, LEAKING OR LOOSE POSTS, DO NOT TEST, ASSIST-BOOST, OR CHARGE. THE BATTERY MAY ARC INTERNALLY AND EXPLODE. PERSONAL INJURY AND/OR VEHICLE DAMAGE MAY RESULT.

WARNING: EXPLOSIVE HYDROGEN GAS FORMS IN AND AROUND THE BATTERY. DO NOT SMOKE, USE FLAME, OR CREATE SPARKS NEAR THE BATTERY. PERSONAL INJURY AND/OR VEHICLE DAMAGE MAY RESULT.

WARNING: THE BATTERY CONTAINS SULFURIC ACID, WHICH IS POISONOUS AND CAUSTIC. AVOID CONTACT WITH THE SKIN, EYES, OR CLOTHING. IN THE EVENT OF CONTACT, FLUSH WITH WATER AND CALL A PHYSICIAN IMMEDIATELY. KEEP OUT OF THE REACH OF CHILDREN.

A battery that will not accept a charge is faulty, and must be replaced. Further testing is not required. A fully-charged battery must be load tested to determine its cranking capacity. A battery that is fully-charged, but does not pass the load test, is faulty and must be replaced.

NOTE: Completely discharged batteries may take several hours to accept a charge. Refer to Standard Procedures for the proper battery charging procedures.

STANDARD PROCEDURE

STANDARD PROCEDURE - USING MICRO 420 BATTERY TESTER

Always use the Micro 420 Instruction Manual that was supplied with the tester as a reference. If the Instruction Manual is not available the following procedure can be used:

WARNING: ALWAYS WEAR APPROPRIATE EYE PROTECTION AND USE EXTREME CAUTION WHEN WORKING WITH BATTERIES.

BATTERY (Continued)

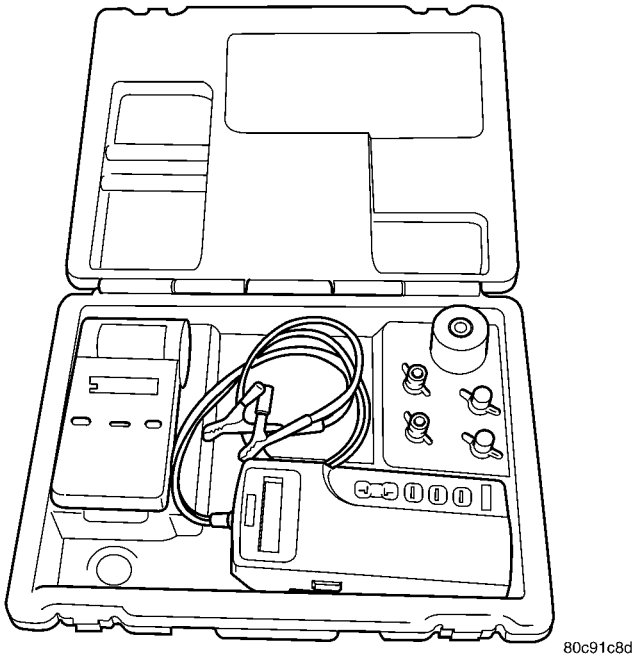

Fig. 3 Micro 420 Battery Tester

BATTERY TESTING

(1) If testing the battery OUT-OF-VEHICLE, clean the battery terminals with a wire brush before testing. If the battery is equipped with side post terminals, install and tighten the supplied lead terminal stud adapters. Do not use steel bolts. Failure to properly install the stud adapters, or using stud adapters that are dirty or worn-out may result in false test readings.

(2) If testing the battery IN-THE-VEHICLE, make certain all of the vehicle accessory loads are OFF, including the ignition. **The preferred test position is at the battery terminal**. If the battery is not accessible, you may test using both the positive and negative jumper posts. Select TESTING AT JUMPER POST when connecting to that location.

(3) Connect the tester (Fig. 3) to the battery or jumper posts, the red clamp to positive (+) and the black clamp to negative (–).

(4) Using the ARROW key select **in** or **out** of vehicle testing and press ENTER to make a selection.

(5) If not selected, choose the Cold Cranking Amp (CCA) battery rating. Or select the appropriate battery rating for your area (see menu). The tester will then run its self programmed test of the battery and display the results. Refer to the test result table noted below.

CAUTION: If REPLACE BATTERY is the result of the test, this may mean a poor connection between the vehicle's cables and battery exists. After disconnecting the vehicle's battery cables from the battery, retest the battery using the OUT-OF-VEHICLE test before replacing.

(6) While viewing the battery test result, press the CODE button and the tester will prompt you for the last 4 digits of the VIN. Use the UP/DOWN arrow buttons to scroll to the correct character; then press ENTER to select and move to the next digit. Then press the ENTER button to view the SERVICE CODE. Pressing the CODE button a second time will return you to the test results.

BATTERY TEST RESULTS	
GOOD BATTERY	Return to service
GOOD - RECHARGE	Fully charge battery and return to service
CHARGE & RETEST	Fully charge battery and retest battery
REPLACE BATTERY	Replace the battery and retest complete system
BAD-CELL REPLACE	Replace the battery and retest complete system

NOTE: The SERVICE CODE is required on every warranty claim submitted for battery replacement.

STANDARD PROCEDURE - BATTERY CHARGING

Battery charging is the means by which the battery can be restored to its full voltage potential. A battery is fully-charged when:

- Micro 420 tester shows Good Battery.
- Three hydrometer tests, taken at one-hour intervals, indicate no increase in the temperature-corrected specific gravity of the battery electrolyte.
- Open-circuit voltage of the battery is 12.4 volts or above.

WARNING: NEVER EXCEED TWENTY AMPERES WHEN CHARGING A COLD (-1° C [30° F] OR LOWER) BATTERY. THE BATTERY MAY ARC INTERNALLY AND EXPLODE. PERSONAL INJURY AND/OR VEHICLE DAMAGE MAY RESULT.

WARNING: IF THE BATTERY SHOWS SIGNS OF FREEZING, LEAKING, LOOSE POSTS, DO NOT TEST, ASSIST-BOOST, OR CHARGE. THE BATTERY MAY ARC INTERNALLY AND EXPLODE. PERSONAL INJURY AND/OR VEHICLE DAMAGE MAY RESULT.

BATTERY (Continued)

WARNING: EXPLOSIVE HYDROGEN GAS FORMS IN AND AROUND THE BATTERY. DO NOT SMOKE, USE FLAME, OR CREATE SPARKS NEAR THE BATTERY. PERSONAL INJURY AND/OR VEHICLE DAMAGE MAY RESULT.

WARNING: THE BATTERY CONTAINS SULFURIC ACID, WHICH IS POISONOUS AND CAUSTIC. AVOID CONTACT WITH THE SKIN, EYES, OR CLOTHING. IN THE EVENT OF CONTACT, FLUSH WITH WATER AND CALL A PHYSICIAN IMMEDIATELY. KEEP OUT OF THE REACH OF CHILDREN.

WARNING: IF THE BATTERY IS EQUIPPED WITH REMOVABLE CELL CAPS, BE CERTAIN THAT EACH OF THE CELL CAPS IS IN PLACE AND TIGHT BEFORE THE BATTERY IS RETURNED TO SERVICE. PERSONAL INJURY AND/OR VEHICLE DAMAGE MAY RESULT FROM LOOSE OR MISSING CELL CAPS.

CAUTION: Always disconnect and isolate the battery negative cable before charging a battery. Do not exceed sixteen volts while charging a battery. Damage to the vehicle electrical system components may result.

CAUTION: Battery electrolyte will bubble inside the battery case during normal battery charging. Electrolyte boiling or being discharged from the battery vents indicates a battery overcharging condition. Immediately reduce the charging rate or turn off the charger to evaluate the battery condition. Damage to the battery may result from overcharging.

CAUTION: The battery should not be hot to the touch. If the battery feels hot to the touch, turn off the charger and let the battery cool before continuing the charging operation. Damage to the battery may result.

After the battery has been charged to 12.4 volts or greater, perform a test using the Micro 420 tester to determine the battery cranking capacity.

Clean and inspect the battery hold downs, tray, terminals, posts, and top before completing battery service. Refer to Battery System Cleaning for the proper battery system cleaning procedures, and Battery System Inspection for the proper battery system inspection procedures.

CHARGING A COMPLETELY DISCHARGED BATTERY

The following procedure should be used to recharge a completely discharged battery. Unless this procedure is properly followed, a good battery may be needlessly replaced.

(1) Measure the voltage at the battery posts with a voltmeter, accurate to 1/10 (0.10) volt (Fig. 4). If the reading is below ten volts, the battery charging current will be low. It could take some time before the battery accepts a current greater than a few milliamperes. Such low current may not be detectable on the ammeters built into many battery chargers.

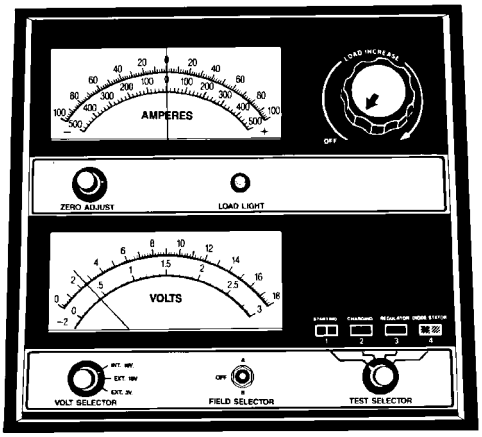

898A-12

Fig. 4 Voltmeter

(2) Disconnect and isolate the battery negative cable. Connect the battery charger leads. Some battery chargers are equipped with polarity-sensing circuitry. This circuitry protects the battery charger and the battery from being damaged if they are improperly connected. If the battery state-of-charge is too low for the polarity-sensing circuitry to detect, the battery charger will not operate. This makes it appear that the battery will not accept charging current. See the instructions provided by the manufacturer of the battery charger for details on how to bypass the polarity-sensing circuitry.

(3) Battery chargers vary in the amount of voltage and current they provide. The amount of time required for a battery to accept measurable charging current at various voltages is shown in the Charge Rate Table. If the charging current is still not measurable at the end of the charging time, the battery is faulty and must be replaced. If the charging current is measurable during the charging time, the battery may be good and the charging should be completed in the normal manner.

BATTERY (Continued)

CHARGE RATE TABLE	
Voltage	Hours
16.0 volts maximum	up to 4 hours
14.0 to 15.9 volts	up to 8 hours
13.9 volts or less	up to 16 hours

CHARGING TIME REQUIRED

The time required to charge a battery will vary, depending upon the following factors:

- **Battery Capacity** - A completely discharged heavy-duty battery requires twice the charging time of a small capacity battery.
- **Temperature** - A longer time will be needed to charge a battery at -18° C (0° F) than at 27° C (80° F). When a fast battery charger is connected to a cold battery, the current accepted by the battery will be very low at first. As the battery warms, it will accept a higher charging current rate (amperage).
- **Charger Capacity** - A battery charger that supplies only five amperes will require a longer charging time. A battery charger that supplies twenty amperes or more will require a shorter charging time.
- **State-Of-Charge** - A completely discharged battery requires more charging time than a partially discharged battery. Electrolyte is nearly pure water in a completely discharged battery. At first, the charging current (amperage) will be low. As the battery charges, the specific gravity of the electrolyte will gradually rise.

The Battery Charging Time Table gives an indication of the time required to charge a typical battery at room temperature based upon the battery state-of-charge and the charger capacity.

BATTERY CHARGING TIME TABLE			
Charging Amperage	5 Amps	10 Amps	20 Amps
Open Circuit Voltage	Hours Charging @ 21° C (70° F)		
12.25 to 12.49	6 hours	3 hours	1.5 hours
12.00 to 12.24	10 hours	5 hours	2.5 hours
10.00 to 11.99	14 hours	7 hours	3.5 hours
Below 10.00	18 hours	9 hours	4.5 hours

STANDARD PROCEDURE - OPEN-CIRCUIT VOLTAGE TEST

A battery open-circuit voltage (no load) test will show the approximate state-of-charge of a battery. This test can be used in place of the hydrometer test when a hydrometer is not available, or for maintenance-free batteries with non-removable cell caps.

Before proceeding with this test, completely charge the battery. Refer to Standard Procedures for the proper battery charging procedures.

(1) Before measuring the open-circuit voltage, the surface charge must be removed from the battery. Turn on the headlamps for fifteen seconds, then allow up to five minutes for the battery voltage to stabilize.

(2) Disconnect and isolate both battery cables, negative cable first.

(3) Using a voltmeter connected to the battery posts (see the instructions provided by the manufacturer of the voltmeter), measure the open-circuit voltage (Fig. 5).

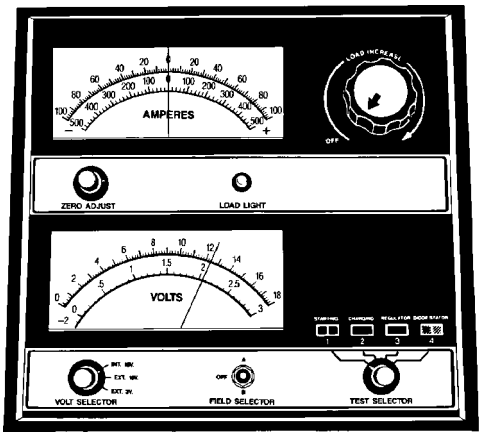

Fig. 5 Testing Open-Circuit Voltage

See the Open-Circuit Voltage Table. This voltage reading will indicate the battery state-of-charge, but will not reveal its cranking capacity. If a battery has an open-circuit voltage reading of 12.4 volts or greater, it may be load tested to reveal its cranking capacity. Refer to Standard Procedures for the proper battery load test procedures.

OPEN CIRCUIT VOLTAGE TABLE	
Open Circuit Voltage	Charge Percentage
11.7 volts or less	0%
12.0 volts	25%
12.2 volts	50%
12.4 volts	75%
12.6 volts or more	100%

BATTERY (Continued)

STANDARD PROCEDURE - IGNITION-OFF DRAW TEST

The term Ignition-Off Draw (IOD) identifies a normal condition where power is being drained from the battery with the ignition switch in the Off position. A normal vehicle electrical system will draw from five to thirty-five milliamperes (0.005 to 0.035 ampere) with the ignition switch in the Off position, and all non-ignition controlled circuits in proper working order. Up to thirty-five milliamperes are needed to enable the memory functions for the Powertrain Control Module (PCM), digital clock, electronically tuned radio, and other modules which may vary with the vehicle equipment.

A vehicle that has not been operated for approximately twenty days, may discharge the battery to an inadequate level. When a vehicle will not be used for twenty days or more (stored), remove the IOD fuse from the Power Distribution Center (PDC). This will reduce battery discharging.

Excessive IOD can be caused by:

- Electrical items left on.
- Faulty or improperly adjusted switches.
- Faulty or shorted electronic modules and components.
- An internally shorted generator.
- Intermittent shorts in the wiring.

If the IOD is over thirty-five milliamperes, the problem must be found and corrected before replacing a battery. In most cases, the battery can be charged and returned to service after the excessive IOD condition has been corrected.

(1) Verify that all electrical accessories are off. Turn off all lamps, remove the ignition key, and close all doors. If the vehicle is equipped with an illuminated entry system or an electronically tuned radio, allow the electronic timer function of these systems to automatically shut off (time out). This may take up to three minutes. See the Electronic Module Ignition-Off Draw Table for more information.

ELECTRONIC MODULE IGNITION-OFF DRAW (IOD) TABLE			
Module	Time Out? (If Yes, Interval And Wake-Up Input)	IOD	IOD After Time Out
EATX	Yes, 20 min, Ignition Key	60 milliamperes	N/A
Audio Power Amplifier	No	up to 1 milliampere	N/A
Powertrain Control Module (PCM)	Yes, 1 min, Ignition Key	Up To 4.0 amps	N/A
Body Control Module	Yes, 1 min, Ignition Key	Up To 3.0 amps	N/A

(2) If equipped, determine that the underhood lamp is operating properly, then disconnect the lamp wire harness connector or remove the lamp bulb.

(3) Disconnect the battery negative cable.

(4) Set an electronic digital multi-meter to its highest amperage scale. Connect the multi-meter between the disconnected battery negative cable terminal clamp and the battery negative terminal post. Make sure that the doors remain closed so that the illuminated entry system is not activated. The multi-meter amperage reading may remain high for up to three minutes, or may not give any reading at all while set in the highest amperage scale, depending upon the electrical equipment in the vehicle. The multi-meter leads must be securely clamped to the battery negative cable terminal clamp and the battery negative terminal post. If continuity between the battery negative terminal post and the negative cable terminal clamp is lost during any part of the IOD test, the electronic timer function will be activated and all of the tests will have to be repeated.

(5) After about three minutes, the high-amperage IOD reading on the multi-meter should become very low or nonexistent, depending upon the electrical equipment in the vehicle. If the amperage reading remains high, remove and replace each fuse or circuit breaker in the Power Distribution Center (PDC) and then in the Junction Block (JB), one at a time until the amperage reading becomes very low, or nonexistent. Refer to the appropriate wiring information in this service manual for complete PDC and JB fuse, circuit breaker, and circuit identification. This will isolate each circuit and identify the circuit that is the source of the high-amperage IOD. If the amperage reading remains high after removing and replacing each fuse and circuit breaker, disconnect the wire harness from the generator. If the amperage reading now becomes very low or nonexistent, refer to Charging System for the proper charging system diagnosis and testing procedures. After the high-amperage IOD has been corrected, switch the multi-meter to progressively lower amperage scales and, if necessary, repeat the fuse and circuit breaker remove-and-re-

BATTERY (Continued)

place process to identify and correct all sources of excessive IOD. It is now safe to select the lowest milliampere scale of the multi-meter to check the low-amperage IOD.

CAUTION: Do not open any doors, or turn on any electrical accessories with the lowest milliampere scale selected, or the multi-meter may be damaged.

(6) Observe the multi-meter reading. The low-amperage IOD should not exceed thirty-five milliamperes (0.035 ampere). If the current draw exceeds thirty-five milliamperes, isolate each circuit using the fuse and circuit breaker remove-and-replace process in Step 5. The multi-meter reading will drop to within the acceptable limit when the source of the excessive current draw is disconnected. Repair this circuit as required; whether a wiring short, incorrect switch adjustment, or a component failure is at fault.

REMOVAL

The battery is accessible without removing the left front wheel and tire assembly..

(1) Verify that the ignition switch and all accessories are OFF.

(2) Turn the steering wheel to the full left position.

(3) Disconnect and isolate the negative battery cable remote terminal from the remote battery post.

WARNING: NEVER GET UNDER A LIFTED VEHICLE IF NOT SUPPORTED PROPERLY ON SAFETY STANDS.

(4) Remove battery splash shield. Refer to the Body section of the service manual for the procedure.

(5) Disconnect the heater blanket cord, if equipped.

(6) Remove the short bolt from the battery hold down and remove the hold down (Fig. 6).

(7) Disconnect the negative and positive battery cables from the battery.

(8) Slide the battery toward rear of vehicle and lift out of the battery tray.

(9) Remove battery from vehicle.

INSTALLATION

(1) Position the battery in the battery tray.

(2) Connect the positive and negative battery cables. Torque to 16 N·m (150 in. lbs.).

(3) Connect the heater blanket cord, if equipped.

(4) Install the battery hold down and install the hold down bolt. Torque to 16 N·m (150 in. lbs.).

(5) Install battery splash shield. Refer to the Body section for the procedure.

(6) Connect the negative battery cable.

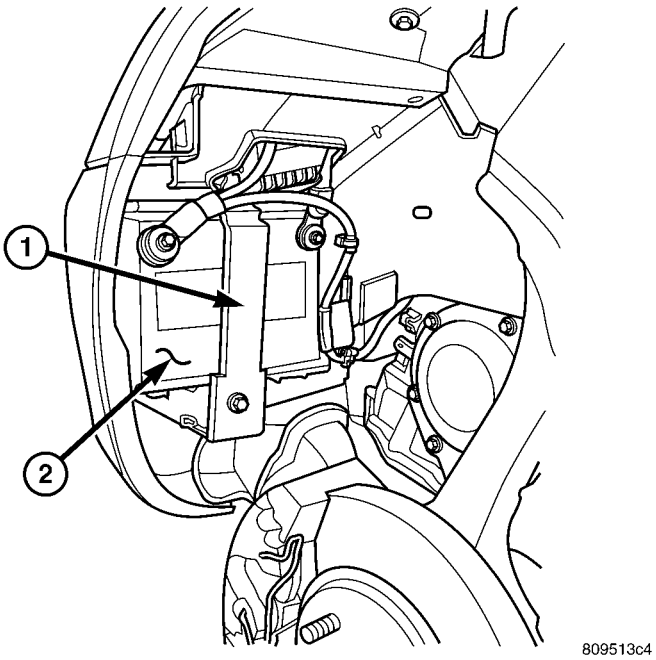

Fig. 6 Battery Location

1 - BATTERY HOLD DOWN
2 - BATTERY

BATTERY HOLDDOWN

DESCRIPTION

The battery hold down includes three bolts and two hold down brackets (Fig. 7). The battery hold down brackets are formed steel brackets with holes on both ends.

When installing a battery into the battery tray, it is important that the hold down hardware is properly installed and that the fasteners are tightened to the proper specifications. Improper hold down fastener tightness, whether too loose or too tight, can result in damage to the battery, the vehicle, or both.

OPERATION

The battery hold down secures the battery in the battery tray. This hold down is designed to prevent battery movement during the most extreme vehicle operation conditions. Periodic removal and lubrication of the battery hold down hardware is recommended to prevent hardware seizure at a later date.

REMOVAL

(1) Disconnect and isolate the negative battery cable remote terminal from the remote battery post.

(2) Raise and support the vehicle.

(3) Remove the left front wheel and tire assembly from the vehicle.

(4) Remove battery splash shield. Refer to the Body section for the procedure.

BATTERY HOLDDOWN (Continued)

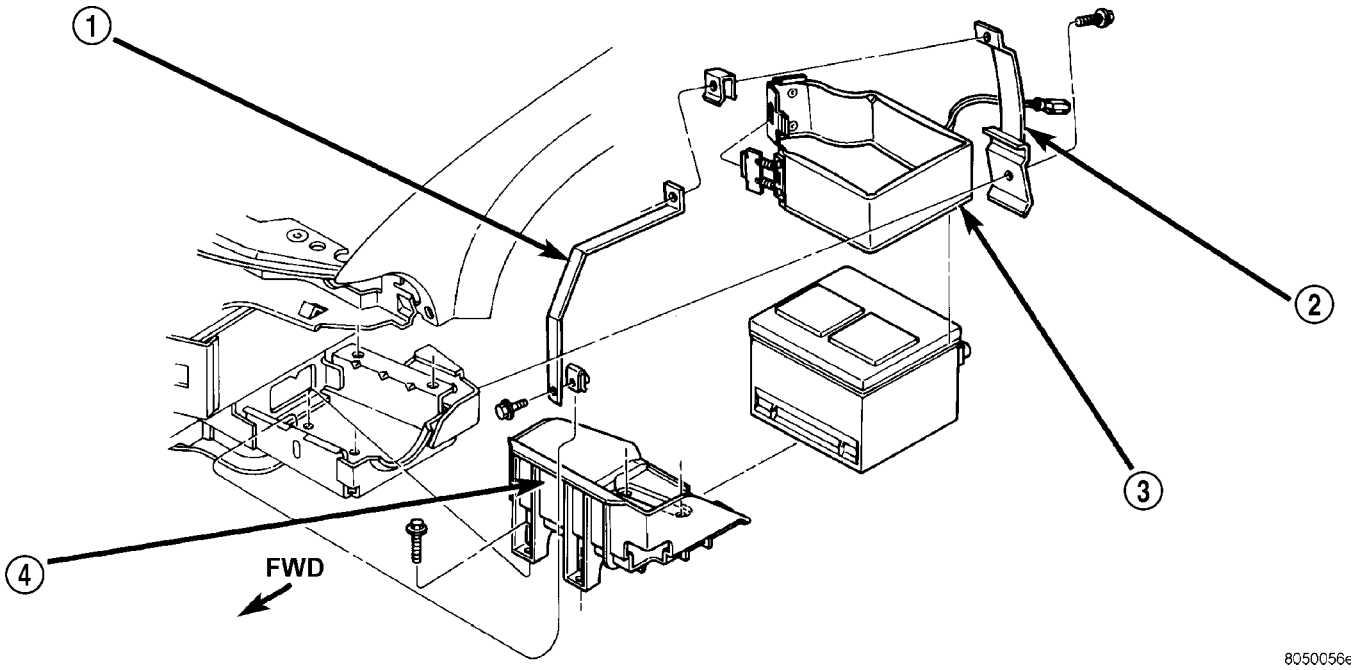

Fig. 7 JR Battery Tray and Holddown Hardware

1 - BATTERY HOLDOWN STRAP
2 - BATTERY HOLDOWN STRAP
3 - BATTERY HEATER BLANKET
4 - BATTERY TRAY

(5) Remove the short bolt from the battery hold down and remove the hold down.

INSTALLATION

(1) Install the battery hold down and install the hold down bolt. Torque to 14 N·m (150 in. lbs.).

(2) Install battery splash shield. Refer to the Body section for the procedure.

(3) Connect the negative battery cable.

BATTERY CABLES

DESCRIPTION

The battery cables are large gauge, stranded copper wires sheathed within a heavy plastic or synthetic rubber insulating jacket. The wire used in the battery cables combines excellent flexibility and reliability with high electrical current carrying capacity. The battery cables feature a clamping type female battery terminal made of soft lead that is die cast onto one end of the battery cable wire. A square headed pinch-bolt and hex nut are installed at the open end of the female battery terminal clamp. Large eyelet type terminals are crimped onto the opposite end of the battery cable wire and then solder-dipped. The battery positive cable wires have a red insulating jacket to provide visual identification and feature a larger female battery terminal clamp to allow connection to the larger battery positive terminal post. The battery negative cable wires have a black insulating jacket and a smaller female battery terminal clamp.

The battery cables cannot be repaired and, if damaged or faulty they must be replaced. Both the battery positive and negative cables are available for service replacement only as a unit with the battery wire harness, which may include portions of the wiring circuits for the generator and other components on some models. Refer to the appropriate wiring information in this service manual for the location of the proper battery cable wire harness diagrams. The wiring information also includes proper wire and connector repair procedures, further details on wire harness routing and retention, as well as pin-out and location views for the various wire harness connectors, splices and grounds.

OPERATION

The battery cables connect the battery terminal posts to the vehicle electrical system. These cables also provide a path back to the battery for electrical current generated by the charging system for restoring the voltage potential of the battery. The female battery terminal clamps on the ends of the battery cable wires provide a strong and reliable connection of the battery cable to the battery terminal posts. The terminal pinch bolts allow the female terminal clamps to be tightened around the male terminal posts on the top of the battery. The eyelet terminals

BATTERY CABLES (Continued)

secured to the opposite ends of the battery cable wires from the female battery terminal clamps provide secure and reliable connection of the battery cables to the vehicle electrical system.

The battery positive cable terminal clamp is die cast onto the ends of two wires. One wire has an eyelet terminal that connects the battery positive cable to the B(+) terminal stud of the Power Distribution Center (PDC), and the other wire has an eyelet terminal that connects the battery positive cable to the B(+) terminal stud of the engine starter motor solenoid. The battery negative cable terminal clamp is also die cast onto the ends of two wires. One wire has an eyelet terminal that connects the battery negative cable to the vehicle powertrain through a stud on the right side of the engine cylinder block. The other wire has an eyelet terminal that connects the battery negative cable to the vehicle body through a ground screw on the right front fender inner shield, near the battery.

DIAGNOSIS AND TESTING - BATTERY CABLES

A voltage drop test will determine if there is excessive resistance in the battery cable terminal connections or the battery cable. If excessive resistance is found in the battery cable connections, the connection point should be disassembled, cleaned of all corrosion or foreign material, then reassembled. Following reassembly, check the voltage drop for the battery cable connection and the battery cable again to confirm repair.

When performing the voltage drop test, it is important to remember that the voltage drop is giving an indication of the resistance between the two points at which the voltmeter probes are attached. **EXAMPLE:** When testing the resistance of the battery positive cable, touch the voltmeter leads to the battery positive cable terminal clamp and to the battery positive cable eyelet terminal at the starter solenoid B(+) terminal stud. If you probe the battery positive terminal post and the battery positive cable eyelet terminal at the starter solenoid B(+) terminal stud, you are reading the combined voltage drop in the battery positive cable terminal clamp-to-terminal post connection and the battery positive cable.

VOLTAGE DROP TEST

The following operation will require a voltmeter accurate to 1/10 (0.10) volt. Before performing this test, be certain that the following procedures are accomplished:

- The battery is fully-charged and load tested. Refer to Standard Procedures for the proper battery charging and load test procedures.
- Fully engage the parking brake.
- If the vehicle is equipped with an automatic transmission, place the gearshift selector lever in the Park position. If the vehicle is equipped with a manual transmission, place the gearshift selector lever in the Neutral position and block the clutch pedal in the fully depressed position.
- Verify that all lamps and accessories are turned off.
- To prevent the engine from starting, remove the Automatic Shut Down (ASD) relay. The ASD relay is located in the Power Distribution Center (PDC), in the engine compartment. See the fuse and relay layout label affixed to the underside of the PDC cover for ASD relay identification and location.

(1) Connect the positive lead of the voltmeter to the battery negative terminal post. Connect the negative lead of the voltmeter to the battery negative cable terminal clamp (Fig. 8). Rotate and hold the ignition switch in the Start position. Observe the voltmeter. If voltage is detected, correct the poor connection between the battery negative cable terminal clamp and the battery negative terminal post.

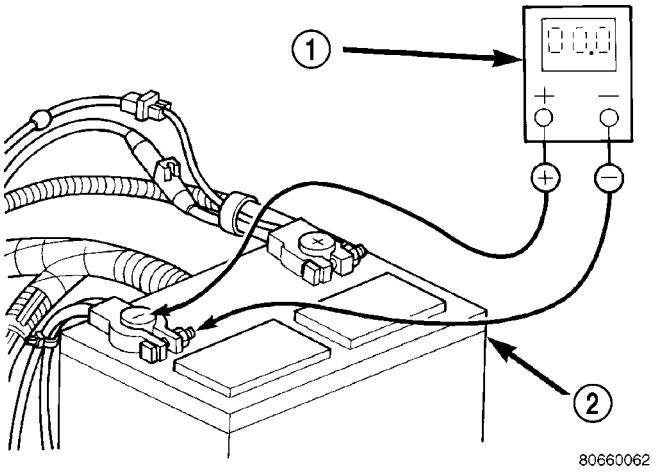

Fig. 8 Test Battery Negative Connection Resistance - Typical

1 - VOLTMETER
2 - BATTERY

(2) Connect the positive lead of the voltmeter to the battery positive terminal post. Connect the negative lead of the voltmeter to the battery positive cable terminal clamp (Fig. 9). Rotate and hold the ignition switch in the Start position. Observe the voltmeter. If voltage is detected, correct the poor connection between the battery positive cable terminal clamp and the battery positive terminal post.

(3) Connect the voltmeter to measure between the battery positive cable terminal clamp and the starter solenoid B(+) terminal stud (Fig. 10). Rotate and hold the ignition switch in the Start position. Observe the voltmeter. If the reading is above 0.2 volt, clean and tighten the battery positive cable eyelet terminal con-

BATTERY CABLES (Continued)

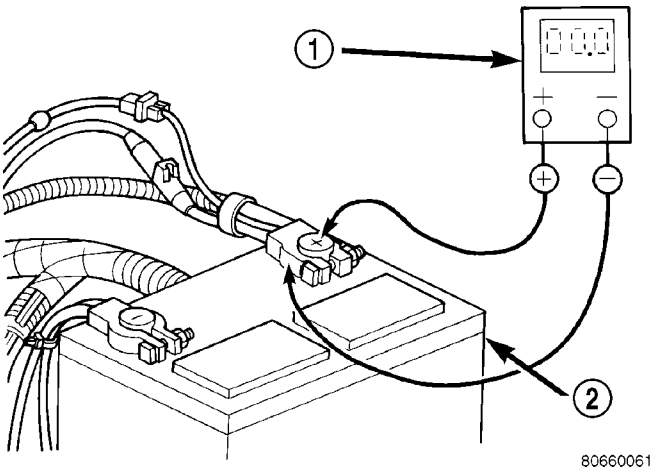

Fig. 9 Test Battery Positive Connection Resistance - Typical

1 - VOLTMETER
2 - BATTERY

nection at the starter solenoid B(+) terminal stud. Repeat the test. If the reading is still above 0.2 volt, replace the faulty battery positive cable.

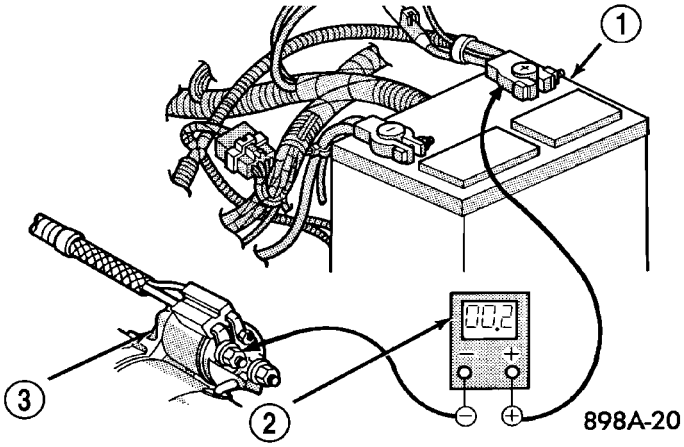

Fig. 10 Test Battery Positive Cable Resistance - Typical

1 - BATTERY
2 - VOLTMETER
3 - STARTER MOTOR

(4) Connect the voltmeter to measure between the battery negative cable terminal clamp and a good clean ground on the engine block (Fig. 11). Rotate and hold the ignition switch in the Start position. Observe the voltmeter. If the reading is above 0.2 volt, clean and tighten the battery negative cable eyelet terminal connection to the engine block. Repeat the test. If the reading is still above 0.2 volt, replace the faulty battery negative cable.

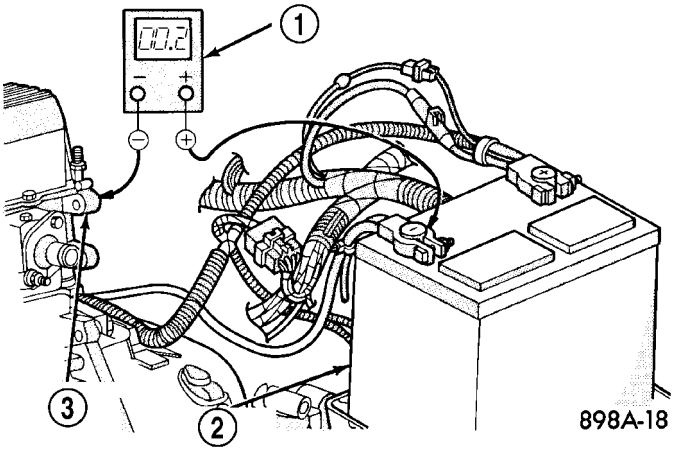

Fig. 11 Test Ground Circuit Resistance - Typical

1 - VOLTMETER
2 - BATTERY
3 - ENGINE GROUND

REMOVAL

(1) Turn the ignition switch to the Off position. Be certain that all electrical accessories are turned off.

(2) Disconnect and isolate the remote battery negative cable terminal.

(3) One at a time, trace and disconnect the battery cable retaining pushpins, fasteners and routing clips until the cables are free from the vehicle.

(4) Feed the battery cable assembly out of the vehicle.

INSTALLATION

(1) Position the battery cable in the vehicle.

(2) One at a time, install the battery cable retaining pushpins, fasteners and routing clips until the cable is installed exactly in the factory installed location in the vehicle. Refer to the Wiring Diagram section of the service manual for reference.

(3) Connect the battery negative cable terminal.

BATTERY TRAY

DESCRIPTION

The battery is placed in a steel tray located in the left front corner of the vehicle (Fig. 12). A hole in the bottom of the battery tray is fitted with a battery temperature sensor. Refer to Charging System for more information on the battery temperature sensor. Refer to Battery Hold down for more information on hold down hardware.

OPERATION

The battery tray provides a secure mounting location and supports the battery. On some vehicles, the battery tray also provides the anchor point/s for the battery holddown hardware. The battery tray and

BATTERY TRAY (Continued)

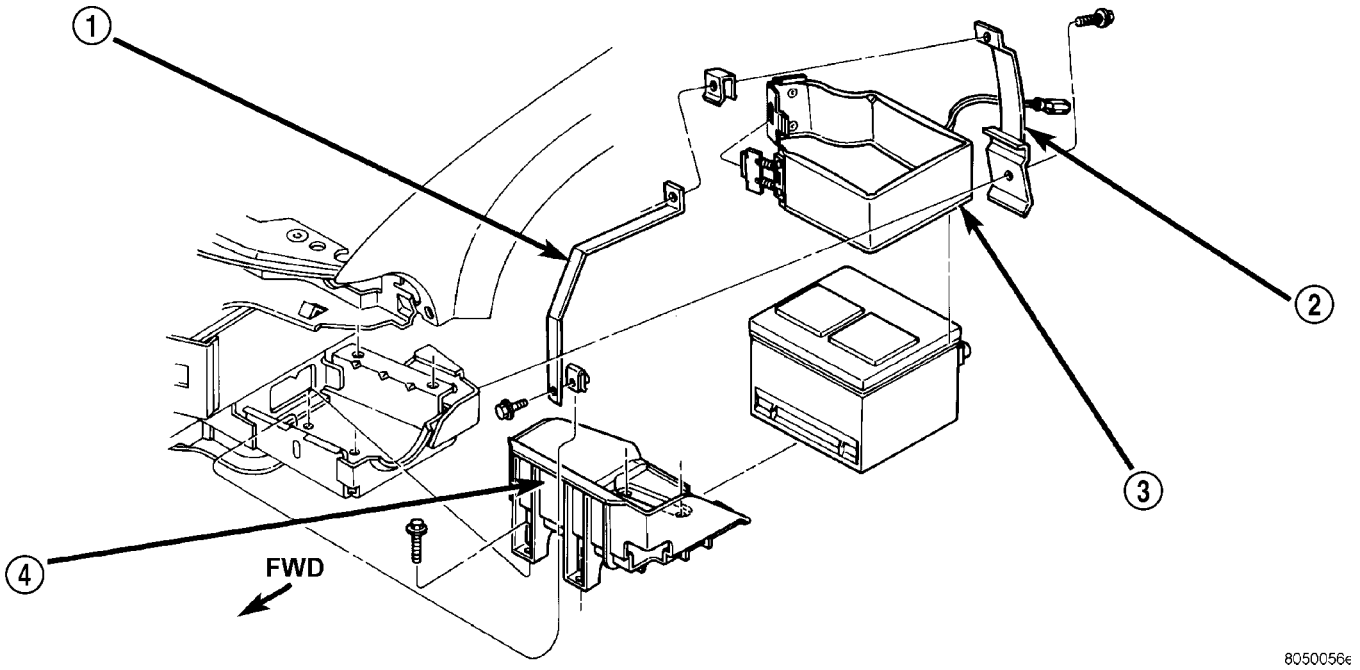

Fig. 12 JR Battery Tray and Holddown Hardware

1 - BATTERY HOLDOWN STRAP
2 - BATTERY HOLDOWN STRAP
3 - BATTERY HEATER BLANKET
4 - BATTERY TRAY

the battery holddown hardware combine to secure and stabilize the battery in the engine compartment, which prevents battery movement during vehicle operation. Unrestrained battery movement during vehicle operation could result in damage to the vehicle, the battery, or both.

REMOVAL

(1) Disconnect and isolate the remote negative battery cable.

(2) Remove the battery from the vehicle (Refer to 8 - ELECTRICAL/BATTERY SYSTEM/BATTERY - REMOVAL).

(3) Remove the left headlamp assembly from the vehicle (Refer to 8 - ELECTRICAL/LAMPS/LIGHTING - EXTERIOR/HEADLAMP UNIT - REMOVAL).

(4) Remove the battery tray retaining bolts (Fig. 13) and remove the battery tray from the vehicle.

INSTALLATION

(1) Install the battery tray and retaining bolts. Torque the bolts to 14 N·m (160 in. lbs.).

(2) Install the battery in the vehicle (Refer to 8 - ELECTRICAL/BATTERY SYSTEM/BATTERY - INSTALLATION).

(3) Install the left headlamp assembly in the vehicle (Refer to 8 - ELECTRICAL/LAMPS/LIGHTING - EXTERIOR/HEADLAMP UNIT - INSTALLATION).

(4) Connect the remote negative battery cable.

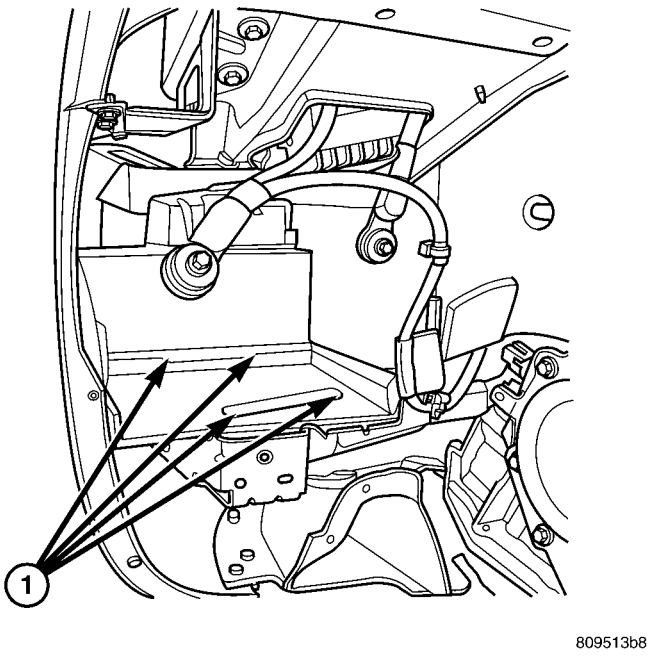

Fig. 13 JR Battery Tray

1 - BATTERY TRAY RETAINING FASTENER LOCATIONS

BATTERY HEATER BLANKET

DESCRIPTION

A heater blanket (Fig. 14) is used to improve the battery cold-start ability. This blanket operates on

BATTERY HEATER BLANKET (Continued)

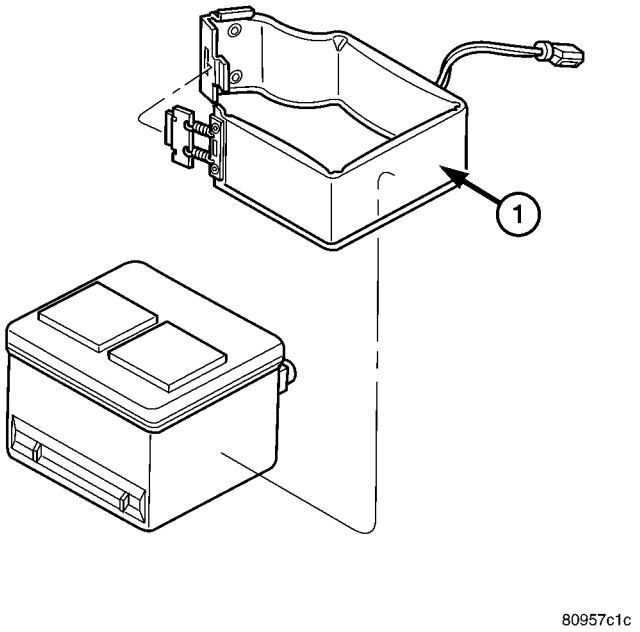

Fig. 14 JR Battery Heater Blanket

1 - BATTERY HEATER BLANKET

110 volt AC current and is used with Alaska and Canada cold weather packages.

The heater blanket cannot be adjusted or repaired. If the blanket is faulty or damaged it must be replaced.

OPERATION

The temperature of the battery can affect battery performance. Only DAIMLERCHRYSLER approved battery blanket/block heater combination should be used. The battery blanket heater is designed to provide optimum charging system performance in very cold ambient temperatures below -17.8°C (0°F).

DIAGNOSIS AND TESTING - BATTERY HEATER BLANKET

(1) Remove the battery heater blanket from the battery (Refer to 8 - ELECTRICAL/BATTERY SYSTEM/THERMAL GUARD - REMOVAL).

(2) Clean the battery heater blanket with baking soda solution and wipe dry.

(3) Inspect blanket for cuts, abrasion or other damage. If heater is damaged replace.

(4) Position the heater flat and re-connect the blanket heater to the vehicles electrical system.

(5) Connect the 110 volt AC power cord to 110 volt source for a maximum of 3 minutes.

(6) Disconnect the 110 volt power cord.

(7) Immediately feel the heater blanket on the inside, it should be warm to the touch. If warm the heater is OK, if not OK proceed.

(8) Disconnect the heater blanket from the vehicles electrical system. Using an Ohmmeter, connect the leads across the two wire terminals coming from the heater blanket. A resistance value of 220 to 280 ohms should be present. If not replace the blanket. If OK proceed.

(9) Ensure that the 110 volt AC power cord is suppling voltage to the heater blanket. If OK replace the heater blanket. If not verify the 110 volt AC power from another source. Inspect the power cord for damage and replace if necessary.

REMOVAL

(1) Remove the battery and the battery heater blanket from the battery tray as a unit (Refer to 8 - ELECTRICAL/BATTERY SYSTEM/BATTERY - REMOVAL).

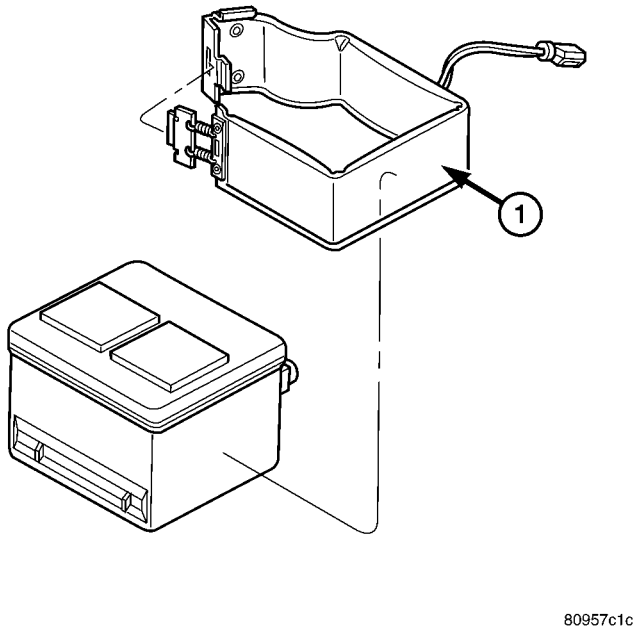

Fig. 15 Battery Heater Blanket

1 - BATTERY HEATER BLANKET

(2) Carefully slide the heater blanket straight off the battery case (Fig. 15).

INSTALLATION

(1) Clean and inspect the battery heater blanket.

(2) Install the battery heater blanket on the battery case.

(3) Install the battery and the battery heater blanket into the battery tray as a unit (Refer to 8 - ELECTRICAL/BATTERY SYSTEM/BATTERY - INSTALLATION).

CHARGING

TABLE OF CONTENTS

page

CHARGING
DESCRIPTION - CHARGING SYSTEM 18
OPERATION - CHARGING SYSTEM 18
DIAGNOSIS AND TESTING - ON-BOARD DIAGNOSTIC SYSTEM 19
SPECIFICATIONS
GENERATOR 20
TORQUE 20
GENERATOR
DESCRIPTION 20
OPERATION 20
REMOVAL
REMOVAL - 4 CYLINDER 20
REMOVAL - 2.7L 22
INSTALLATION
INSTALLATION - 4 CYLINDER 22
INSTALLATION - 2.7L 22
VOLTAGE REGULATOR
DESCRIPTION 23
OPERATION 23

CHARGING

DESCRIPTION - CHARGING SYSTEM

The charging system consists of:

- Generator
- Decoupler Pulley (If equipped)
- Electronic Voltage Regulator (EVR) circuitry within the Powertrain Control Module (PCM)
- Ignition switch (refer to the Ignition System section for information)
- Battery (refer to the Battery section for information)
- Ambient Air Temperature (If equipped)
- Inlet Air Temperature (calculated battery temperature)(If equipped)
- Voltmeter (refer to the Instrument Cluster section for information if equipped)
- Wiring harness and connections (refer to the Wiring section for information)
- Accessory drive belt (refer to the Cooling section for more information)
- Battery Temperature sensor (if equipped)

OPERATION - CHARGING SYSTEM

The charging system is turned on and off with the ignition switch. The system is on when the engine is running and the ASD relay is energized. The ASD relay is energized when the PCM grounds the ASD control circuit. This voltage is connected through the PCM or IPM (intelligent power module) (if equipped) and supplied to one of the generator field terminals (Gen. Source +) at the back of the generator.

The generator is driven by the engine through a serpentine belt and pulley or decoupler pulley arrangement.

The amount of DC current produced by the generator is controlled by the EVR (field control) circuitry contained within the PCM. This circuitry is connected in series with the second rotor field terminal and ground.

An Ambient air temperature sensor is used to calculate the temperature near the battery. This temperature data, along with data from monitored line voltage (battery voltage sense circuit), is used by the PCM to vary the battery charging rate. This is done by cycling the ground path to control the strength of the rotor magnetic field. The PCM then compensates and regulates generator current output accordingly to maintain system voltage at the targeted system voltage based on battery temperature.

All vehicles are equipped with On-Board Diagnostics (OBD). All OBD-sensed systems, including EVR (field control) circuitry, are monitored by the PCM. Each monitored circuit is assigned a Diagnostic Trouble Code (DTC). The PCM will store a DTC in electronic memory for certain failures it detects and illuminate the (MIL) lamp. Refer to On-Board Diagnostics in the Electronic Control Modules(Refer to 8 - ELECTRICAL/ELECTRONIC CONTROL MODULES/POWERTRAIN CONTROL MODULE - DESCRIPTION) section for more DTC information.

The Charging system “Battery” light indicates problems with the charging system (voltage too high/low, generator failure, etc.). If an extreme condition is indicated, the lamp will be illuminated. The signal to activate the lamp is sent via the PCI bus circuits. The lamp is located on the instrument panel. Refer to the Instrument Cluster section for additional information.

The PCM uses the ambient air temperature sensor to control the charge system voltage. This temperature, along with data from monitored line voltage, is used by the PCM to vary the battery charging rate. The system voltage is higher at cold temperatures

CHARGING (Continued)

and is gradually reduced as the calculated battery temperature increases.

The ambient temperature sensor is used to control the battery voltage based upon ambient temperature (approximation of battery temperature). The PCM maintains the optimal output of the generator by monitoring battery voltage and controlling it to a range of 13.5 - 14.7 volts based on battery temperature.

DIAGNOSIS AND TESTING - ON-BOARD DIAGNOSTIC SYSTEM

The Powertrain Control Module (PCM) monitors critical input and output circuits of the charging system, making sure they are operational. A Diagnostic Trouble Code (DTC) is assigned to each input and output circuit monitored by the OBD system. Some circuits are checked continuously and some are checked only under certain conditions.

If the OBD system senses that a monitored circuit is bad, it will put a DTC into electronic memory. The DTC will stay in electronic memory as long as the circuit continues to be bad. The PCM is programmed to clear the memory after 40 good trip if the problem does not occur again.

DIAGNOSTIC TROUBLE CODES

A DTC description can be read using the DRBIII® scan tool. Refer to the appropriate Powertrain Diagnostic Procedures manual for information.

A DTC does not identify which component in a circuit is bad. Thus, a DTC should be treated as a symptom, not as the cause for the problem. In some cases, because of the design of the diagnostic test procedure, a DTC can be the reason for another DTC to be set. Therefore, it is important that the test procedures be followed in sequence, to understand what caused a DTC to be set.

ERASING DIAGNOSTIC TROUBLE CODES

The DRBIII® Scan Tool must be used to erase a DTC.

The following procedures may be used to diagnose the charging system if:

- the check gauges lamp or battery lamp is illuminated with the engine running
- the voltmeter (if equipped) does not register properly
- an undercharged or overcharged battery condition occurs.

Remember that an undercharged battery is often caused by:

- accessories being left on with the engine not running
- a faulty or improperly adjusted switch that allows a lamp to stay on. Refer to Ignition-Off Draw Test (Refer to 8 - ELECTRICAL/BATTERY SYSTEM/ BATTERY - STANDARD PROCEDURE)
- loose generator belt.

INSPECTION

The Powertrain Control Module (PCM) monitors critical input and output circuits of the charging system, making sure they are operational. A Diagnostic Trouble Code (DTC) is assigned to each input and output circuit monitored by the On-Board Diagnostic (OBD) system. Some charging system circuits are checked continuously, and some are checked only under certain conditions.

Refer to Diagnostic Trouble Codes in; Powertrain Control Module; Electronic Control Modules for more DTC information. This will include a complete list of DTC's including DTC's for the charging system.

To perform a complete test of the charging system, refer to the appropriate Powertrain Diagnostic Procedures service manual and the DRBIII® scan tool. Perform the following inspections before attaching the scan tool.

(1) Inspect the battery condition. Refer to the Battery section (Refer to 8 - ELECTRICAL/BATTERY SYSTEM - DIAGNOSIS AND TESTING) for procedures.

(2) Inspect condition of battery cable terminals, battery posts, connections at engine block, starter solenoid and relay. They should be clean and tight. Repair as required.

(3) Inspect all fuses in both the fuseblock and Power Distribution Center (PDC) or IPM (if equipped) for tightness in receptacles. They should be properly installed and tight. Repair or replace as required.

(4) Inspect generator mounting bolts for tightness. Replace or tighten bolts if required. Refer to the Generator Removal/Installation section of this group for torque specifications (Refer to 8 - ELECTRICAL/ CHARGING - SPECIFICATIONS).

(5) Inspect generator drive belt condition and tension. Tighten or replace belt as required. Refer to Belt Tension Specifications(Refer to 7 - COOLING/ ACCESSORY DRIVE - SPECIFICATIONS).

(6) Inspect decoupler pulley (if equipped). Ensure decoupler pulley is driving the alternator rotor.

(7) Inspect automatic belt tensioner (if equipped). Refer to the Cooling System for more information.

(8) Inspect generator electrical connections at generator field, battery output, and ground terminal (if equipped). Also check generator ground wire connection at engine (if equipped). They should all be clean and tight. Repair as required.

CHARGING (Continued)

SPECIFICATIONS

GENERATOR

Type	Engine	Minimun Test Amperage
DENSO	2.0L	135 Amp
DENSO	2.4L	135 Amp
DENSO	2.7L	135 Amp
Test Specification: 1. Engine RPM : 2500 RPM ±20 RPM 2. Voltage Output : 14.0 V ± 0.5 V 3. Field Current : 5 amps ± 0.1 amps		

Part number is located on the side of the generator.

TORQUE

DESCRIPTION	N·m	Ft. Lbs.	In. Lbs.
Battery Hold Down Clamp Bolt	22.6	16.7	200
Generator B+ Nut	11	8.1	97.4
Battery Terminal Nut	15.8	11.7	140
Generator Mounting Bolts 2.4L	28.2	20.8	250
Generator Mounting Bolts 2.7L	28.2	20.8	250

GENERATOR

DESCRIPTION

The generator is belt-driven by the engine. It is serviced only as a complete assembly. If the generator fails for any reason, the entire assembly must be replaced. The generator produces DC voltage.

OPERATION

As the energized rotor begins to rotate within the generator, the spinning magnetic field induces a current into the windings of the stator coil.

The Y type stator winding connections deliver the induced AC current to 3 positive and 3 negative diodes for rectification. From the diodes, rectified DC current is delivered to the vehicles electrical system through the generator, battery, and ground terminals.

Noise emitting from the generator may be caused by:

- Worn, loose or defective bearings
- Loose or defective drive pulley
- Incorrect, worn, damaged or misadjusted drive belt
- Loose mounting bolts
- Misaligned drive pulley
- Defective stator or diode
- Damaged internal fins

REMOVAL

REMOVAL - 4 CYLINDER

(1) Disconnect battery negative cable from remote negative terminal on shock tower (Fig. 1).

(2) Remove belt cover.

(3) Unplug field circuit from generator.

(4) Remove B+ terminal cover by spreading the cover with a small flat blade tool.

(5) Remove the B+ terminal wire and nut (Fig. 2).

(6) Raise vehicle and support.

(7) Remove the accessory drive splash shield.

(8) Remove the accessory drive belt, refer to the Cooling section for more information.

(9) Lower vehicle.

(10) Remove the MAP sensor from the intake manifold (Fig. 3).

GENERATOR (Continued)

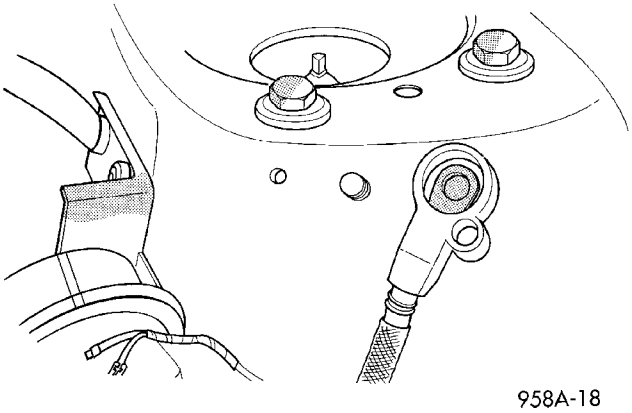

Fig. 1 Remove Battery Cable at Shock Tower

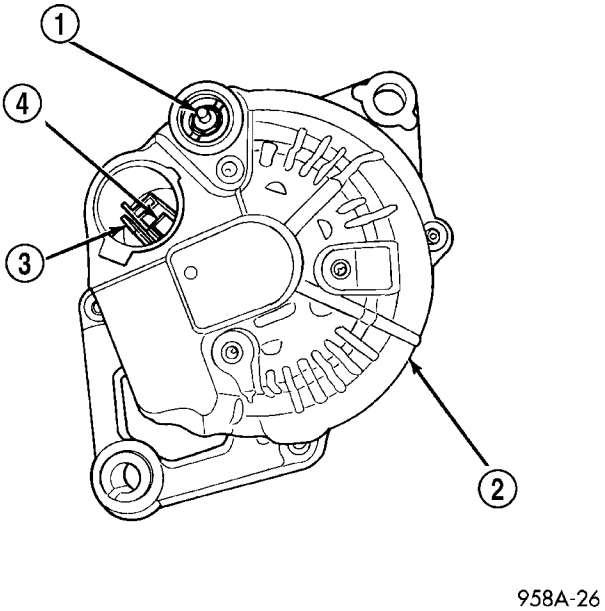

Fig. 2 Wiring Connections

1 - B+ TERMINAL
2 - CASE GROUND
3 - FEED
4 - TO PCM

(11) Remove the generator bolts.
(12) Remove the generator from vehicle (Fig. 4).

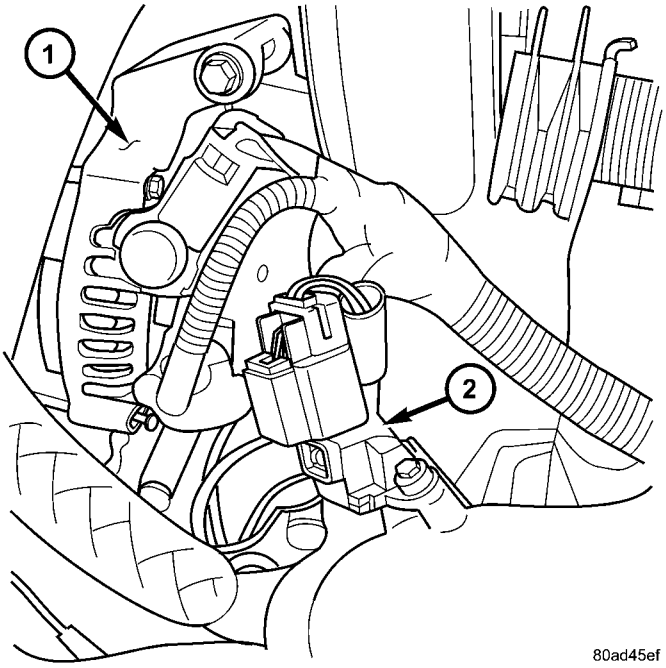

Fig. 3 GENERATOR AND MAP SENSOR

1 - Generator
2 - MAP Sensor

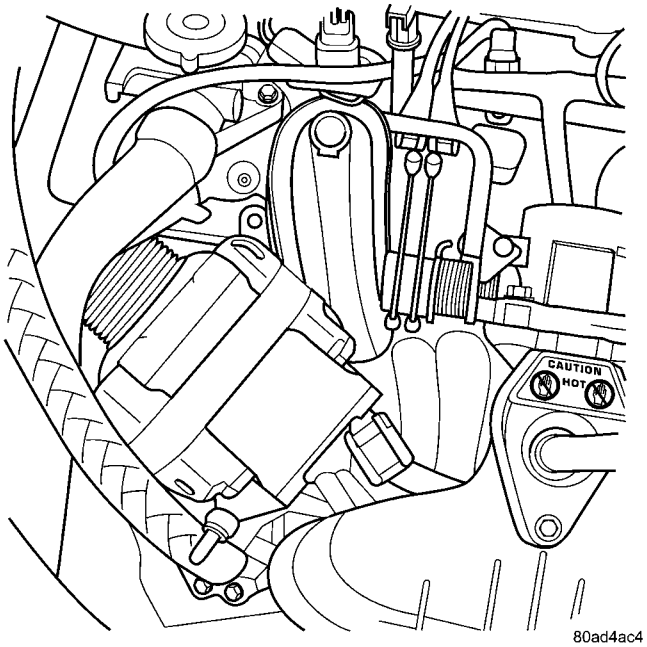

Fig. 4 GENERATOR

GENERATOR (Continued)

REMOVAL - 2.7L

(1) Open Hood.
(2) Disconnect the negative battery cable.
(3) Raise vehicle and support.
(4) Remove the accessory drive belt splash shield.
(5) Loosen the accessory drive belt refer to the cooling section.
(6) Remove the lower mounting bolt.
(7) Lower the vehicle.
(8) Remove the B+ terminal and field connection (Fig. 5).

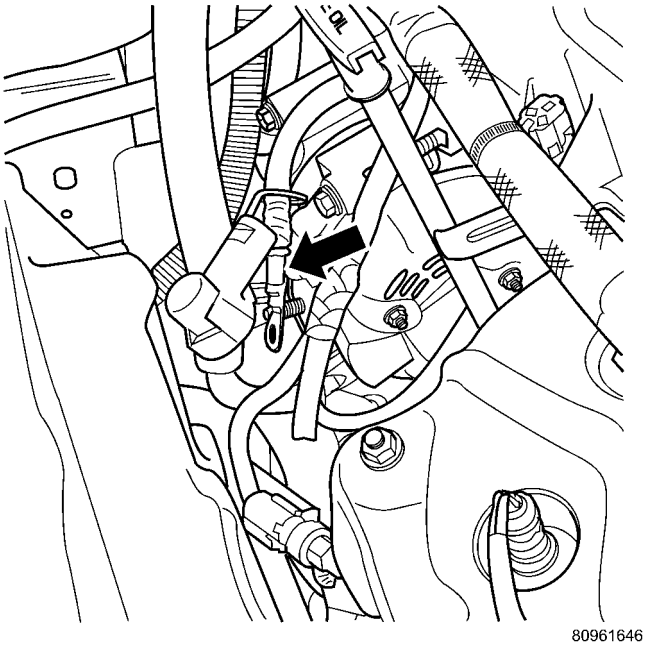

Fig. 5 GENERATOR BATTERY CABLE

(9) Disconnect the electrical connector to the A/C pressure switch and A/C clutch.
(10) Remove the engine oil dip stick.
(11) Remove the 2 upper mounting bolts.
(12) Remove the generator (Fig. 6).

INSTALLATION

INSTALLATION - 4 CYLINDER

(1) Install generator.
(2) Install bolts and tighten.
(3) Install MAP sensor and tighten bolts.
(4) Raise vehicle and support.
(5) Install the accessory drive belt, refer to the Cooling section for more information.

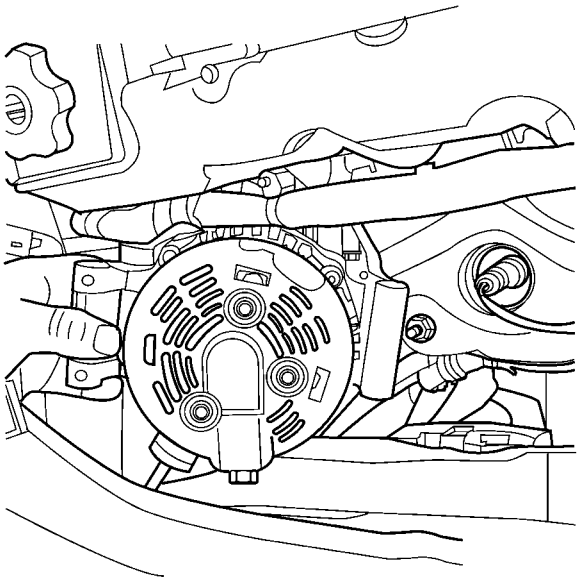

Fig. 6 GENERATOR

(6) Install the accessory drive splash shield.
(7) Lower vehicle.
(8) Install the B+ terminal wire and nut (Fig. 2).
(9) Install B+ terminal cover.
(10) Plug in the field circuit to generator.
(11) Install belt cover.
(12) Install the negative battery cable.

INSTALLATION - 2.7L

(1) Install generator (Fig. 6).
(2) Install the 2 upper bolts but do not tighten.
(3) Install the engine dip stick tube.
(4) Connect the A/C pressure switch and A/C clutch electrical connectors.
(5) Connect the B+ terminal and field connectors (Fig. 5).
(6) Raise vehicle and support.
(7) Install the lower bolt and tighten.
(8) Install the accessory drive belt, refer to the cooling section.
(9) Install the accessory drive splash shield.
(10) Lower the vehicle.
(11) Tighten the 2 upper mounting bolts.
(12) Connect the negative battery cable.

VOLTAGE REGULATOR

DESCRIPTION

The Electronic Voltage Regulator (EVR) is not a separate component. It is actually a voltage regulating circuit located within the Powertrain Control Module (PCM). The EVR is not serviced separately. If replacement is necessary, the PCM must be replaced.

OPERATION

The amount of DC current produced by the generator is controlled by EVR circuitry contained within the PCM. This circuitry is connected in series with the generators second rotor field terminal and its ground.

Voltage is regulated within the PCM on the NGC vehicles, to control the strength of the rotor magnetic field. The EVR circuitry monitors system line voltage at the PDC and calculated battery temperature or inlet air temperature sensor (refer to Inlet Air Temperature Sensor, if equipped, for more information). It then determines a target charging voltage. If sensed battery voltage is lower than the target voltage, the PCM feeds the field winding until sensed battery voltage is at the target voltage. A circuit in the PCM cycles the feed side of the generator field at 250 times per second (250Hz), but has the capability to feed the field control wire 100% of the time (full field) to achieve the target voltage. If the charging rate cannot be monitored (limp-in), a duty cycle of 20% is used by the PCM in order to have some generator output. Also refer to Charging System Operation for additional information.

STARTING

TABLE OF CONTENTS

page

STARTING
DESCRIPTION 24
OPERATION 24
DIAGNOSIS AND TESTING
DIAGNOSIS AND TESTING - CONTROL CIRCUIT TEST 24
DIAGNOSIS AND TESTING - STARTING SYSTEM TEST 26
DIAGNOSIS AND TESTING - FEED CIRCUIT RESISTANCE TEST 28
DIAGNOSIS AND TESTING - FEED CIRCUIT TEST 29
SPECIFICATIONS - TORQUE 29

page

STARTER MOTOR
REMOVAL
REMOVAL - 4 CYLINDER 29
REMOVAL - 2.7L 30
INSTALLATION
INSTALLATION - 4 CYLINDER 31
INSTALLATION - 2.7L 31
STARTER MOTOR RELAY
DESCRIPTION 31
OPERATION 31
REMOVAL 31
STARTER SOLENOID
OPERATION 31

STARTING

DESCRIPTION

The starting system consists of:

- Starter relay
- Starter motor (including an integral starter solenoid)

Other components to be considered as part of starting system are:

- Battery
- Battery cables
- Ignition switch and key lock cylinder
- Clutch pedal position switch (manual transmission)
- Park/neutral position switch (automatic transmission)
- Wire harnesses and connections.

The Battery, Starting, and Charging systems operate in conjunction with one another, and must be tested as a complete system. For correct operation of starting/charging systems, all components used in these 3 systems must perform within specifications. When attempting to diagnose any of these systems, it is important that you keep their interdependency in mind.

The diagnostic procedures used in each of these groups include the most basic conventional diagnostic methods, to the more sophisticated On-Board Diagnostics (OBD) built into the Powertrain Control Module (PCM). Use of an induction-type milliampere ammeter, volt/ohmmeter, battery charger, carbon pile rheostat (load tester), and 12-volt test lamp may be required.

OPERATION

These components form two separate circuits. A high amperage circuit that feeds the starter motor up to 300+ amps, and a control circuit that operates on less than 20 amps.

The PCM controls a double start over-ride safety that does not allow the starter to be engaged if the engine is already running.

DIAGNOSIS AND TESTING

DIAGNOSIS AND TESTING - CONTROL CIRCUIT TEST

The starter control circuit has:

- Starter motor with integral solenoid
- Starter relay
- Transmission range sensor, or Park/Neutral Position switch with automatic transmissions
- Ignition switch
- Battery
- All related wiring and connections
- Powertrain Control Module (PCM)

CAUTION: Before performing any starter tests, the ignition and fuel systems must be disabled.

- To disable ignition and fuel systems, disconnect the Automatic Shutdown Relay (ASD). The ASD relay is located in the Power Distribution Center (PDC). Refer to the PDC cover for the proper relay location.

STARTING (Continued)

STARTER SOLENOID

WARNING: CHECK TO ENSURE THAT THE TRANSMISSION IS IN THE PARK POSITION WITH THE PARKING BRAKE APPLIED.

(1) Verify battery condition. Battery must be in good condition with a full charge before performing any starter tests. Refer to Battery Tests.

(2) Perform Starter Solenoid test BEFORE performing the starter relay test.

(3) Perform a visual inspection of the starter/starter solenoid for corrosion, loose connections or faulty wiring.

(4) Locate and remove the starter relay from the Power Distribution Center (PDC). Refer to the PDC label for relay identification and location.

(5) Connect a remote starter switch or a jumper wire between the remote battery positive post and terminal 87 of the starter relay connector.

(a) If engine cranks, starter/starter solenoid is good. Go to the Starter Relay Test.

(b) If engine does not crank or solenoid chatters, check wiring and connectors from starter relay to starter solenoid and from the battery positive terminal to starter post for loose or corroded connections. Particularly at starter terminals.

(c) Repeat test. If engine still fails to crank properly, trouble is within starter or starter mounted solenoid, and replace starter. Inspect the ring gear teeth.

STARTER RELAY

WARNING: CHECK TO ENSURE THAT THE TRANSMISSION IS IN THE PARK/NEUTRAL POSITION WITH THE PARKING BRAKE APPLIED.

RELAY TEST

The starter relay is located in the Power Distribution Center (PDC) in the engine compartment. Refer to the PDC label for relay identification and location.

Remove the starter relay from the PDC as described in this group to perform the following tests:

(1) A relay in the de-energized position should have continuity between terminals 87A and 30, and no continuity between terminals 87 and 30. If OK, go to Step 2. If not OK, replace the faulty relay.

(2) Resistance between terminals 85 and 86 (electromagnet) should be 75 ±5 ohms. If OK, go to Step 3. If not OK, replace the faulty relay.

(3) Connect a battery B+ lead to terminals 85 and a ground lead to terminal 86 to energize the relay. The relay should click. Also test for continuity between terminals 30 and 87, and no continuity between terminals 87A and 30. If OK, refer to Relay Circuit Test procedure. If not OK, replace the faulty relay.

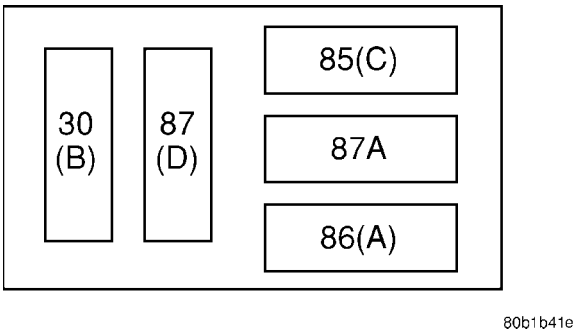

Starter Relay Pinout

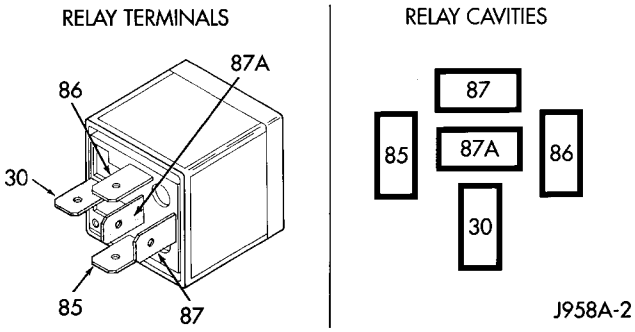

Starter Relay Pinout

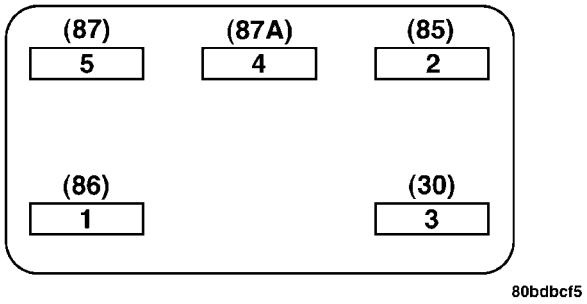

Starter Relay Pinout

CAV	FUNCTION
30	B (+)
85	IGNITION SWITCH OUTPUT
86	PCM-CONTROLLED GROUND
87	STARTER RELAY OUTPUT
87A	NO CONNECT

STARTING (Continued)

RELAY CIRCUIT TEST

(1) The relay common feed terminal cavity (30) is connected to battery voltage and should be hot at all times. If OK, go to Step 2. If not OK, repair the open circuit to the PDC fuse as required.

(2) The relay normally closed terminal (87A) is connected to terminal 30 in the de-energized position, but is not used for this application. Go to Step 3.

(3) The relay normally open terminal (87) is connected to the common feed terminal (30) in the energized position. This terminal supplies battery voltage to the starter solenoid field coils. There should be continuity between the cavity for relay terminal 87 and the starter solenoid terminal at all times. If OK, go to Step 4. If not OK, repair the open circuit to the starter solenoid as required.

(4) The coil battery terminal (85) is connected to the electromagnet in the relay. It is energized when the ignition switch is held in the Start position and the clutch pedal is depressed (manual trans). Check for battery voltage at the cavity for relay terminal 86 with the ignition switch in the Start position and the clutch pedal is depressed (manual trans), and no voltage when the ignition switch is released to the On position. If OK, go to Step 5. If not OK, check for an open or short circuit to the ignition switch and repair, if required. If the circuit to the ignition switch is OK, see the Ignition Switch Test procedure in this group.

(5) The coil ground terminal (86) is connected to the electromagnet in the relay. It is grounded by the PCM if the conditions are right to start the car. For automatic trans. cars the PCM must see Park Neutral switch low and near zero engine speed (rpm). For manual trans. cars the PCM only needs to see near zero engine speed (rpm) and low clutch interlock input and see near zero engine speed (rpm). To diagnose the Park Neutral switch of the trans range sensor refer to the transaxle section. Check for continuity to ground while the ignition switch is in the start position and if equipped the clutch pedal depressed. If not OK and the vehicle has an automatic trans. verify Park Neutral switch operation. If that checks OK check for continuity between PCM and the terminal 86. Repair open circuit as required. Also check the clutch interlock switch operation if equipped with a manual transmission. If OK, the PCM may be defective.

SAFETY SWITCHES

For diagnostics of the Transmission Range Sensor, refer to the Transaxle section for more information.

If equipped with Clutch Interlock/Upstop Switch, refer to Diagnosis and Testing in the Clutch section.

IGNITION SWITCH

After testing starter solenoid and relay, test ignition switch and wiring. Refer to the Ignition Section or Wiring Diagrams for more information. Check all wiring for opens or shorts, and all connectors for being loose or corroded.

BATTERY

For battery diagnosis and testing, refer to the Battery section for procedures.

ALL RELATED WIRING AND CONNECTORS

Refer to Wiring Diagrams for more information.

DIAGNOSIS AND TESTING - STARTING SYSTEM TEST

For circuit descriptions and diagrams, refer to the Wiring Diagrams.

WARNING: ON VEHICLES EQUIPPED WITH AIRBAGS, REFER TO THE PASSIVE RESTRAINT SYSTEMS BEFORE ATTEMPTING STEERING WHEEL, STEERING COLUMN, OR INSTRUMENT PANEL COMPONENT DIAGNOSIS OR SERVICE. FAILURE TO TAKE THE PROPER PRECAUTIONS COULD RESULT IN ACCIDENTAL AIRBAG DEPLOYMENT AND POSSIBLE PERSONAL INJURY.

INSPECTION

Before removing any unit from the starting system for repair or diagnosis, perform the following inspections:

- **Battery** - Visually inspect the battery for indications of physical damage and loose or corroded cable connections. Determine the state-of-charge and cranking capacity of the battery. Charge or replace the battery, if required. Refer to the Battery section for more information.
- **Ignition Switch** - Visually inspect the ignition switch for indications of physical damage and loose or corroded wire harness connections.
- **Transmission Range Sensor or Park/Neutral Switch** - Visually inspect the transmission range sensor for indications of physical damage and loose or corroded wire harness connections.
- **Starter Relay** - Visually inspect the starter relay for indications of physical damage and loose or corroded wire harness connections.
- **Starter Motor** - Visually inspect the starter motor for indications of physical damage and loose or corroded wire harness connections.
- **Starter Solenoid** - Visually inspect the starter solenoid for indications of physical damage and loose or corroded wire harness connections.

STARTING (Continued)

- **Wiring** - Visually inspect the wire harness for damage. Repair or replace any faulty wiring, as required. Check for loose or corroded wire harness connections at main engine ground and remote jump post.
- **Power Distribution Center (PDC)** - Visually inspect the B+ connections at the PDC for physical damage and loose or corroded harness connections.

STARTING SYSTEM DIAGNOSIS

CONDITION	POSSIBLE CAUSE	CORRECTION
STARTER FAILS TO ENGAGE.	1. BATTERY DISCHARGED OR FAULTY.	1. REFER TO THE BATTERY SECTION FOR MORE INFORMATION. CHARGE OR REPLACE BATTERY, IF REQUIRED.
	2. STARTING CIRCUIT WIRING FAULTY.	2. REFER TO FEED CIRCUIT RESISTANCE TEST AND FEED CIRCUIT TEST IN THIS SECTION.
	3. STARTER RELAY FAULTY.	3. REFER TO RELAY TEST, IN THIS SECTION. REPLACE RELAY, IF NECESSARY.
	4. IGNITION SWITCH FAULTY.	4. REFER TO IGNITION SWITCH TEST, IN THE STEERING SECTION OR 8 WIRING DIAGRAMS. REPLACE SWITCH, IF NECESSARY.
	5. PARK/NEUTRAL POSITION SWITCH (AUTO TRANS) FAULTY OR MIS-ADJUSTED.	5. REFER PARK/NEUTRAL POSITION SWITCH TEST, IN THE TRANSAXLE. SECTION FOR MORE INFORMATION. REPLACE SWITCH, IF NECESSARY.
	6. CLUTCH INTERLOCK SWITCH (MAN TRANS) FAULTY.	6. REFER TO CLUTCH PEDAL POSITION SWITCH TEST, IN THE CLUTCH. SECTION. REPLACE SWITCH, IF NECESSARY.
	7. STARTER SOLENOID FAULTY.	7. REFER TO SOLENOID TEST, IN THIS SECTION. REPLACE STARTER ASSEMBLY, IF NECESSARY.
	8. STARTER ASSEMBLY FAULTY.	8. IF ALL OTHER STARTING SYSTEM COMPONENTS AND CIRCUITS CHECK OK, REPLACE STARTER ASSEMBLY.
	9. FAULTY TEETH ON RING GEAR.	9. ROTATE FLYWHEEL 360°, AND INSPECT TEETH AND RING GEAR REPLACED IF DAMAGED.
	10. PCM DOUBLE START OVERRIDE OUTPUT FAILURE.	10. REFER TO PCM DIAGNOSTIC. CHECK FOR CONTINUITY BETWEEN PCM AND TERMINAL 85. REPAIR OPEN CIRCUIT AS REQUIRED. IF OK, PCM MAY BE DEFECTIVE.
STARTER ENGAGES, FAILS TO TURN ENGINE.	1. BATTERY DISCHARGED OR FAULTY.	1. REFER TO THE BATTERY SECTION FOR MORE INFORMATION. CHARGE OR REPLACE BATTERY AS NECESSARY.
	2. STARTING CIRCUIT WIRING FAULTY.	2. REFER TO THE FEED CIRCUIT RESISTANCE TEST AND THE FEED CIRCUIT TEST IN THIS SECTION. REPAIR AS NECESSARY.
	3. STARTER ASSEMBLY FAULTY.	3. IF ALL OTHER STARTING SYSTEM COMPONENTS AND CIRCUITS CHECK OK, REPLACE STARTER ASSEMBLY.
	4. ENGINE SEIZED.	4. REFER TO THE ENGINE SECTION, FOR DIAGNOSTIC AND SERVICE PROCEDURES.

STARTING (Continued)

CONDITION	POSSIBLE CAUSE	CORRECTION
	5. LOOSE CONNECTION AT BATTERY, PDC, STARTER, OR ENGINE GROUND.	5. INSPECT FOR LOOSE CONNECTIONS.
	6. FAULTY TEETH ON RING GEAR.	6. ROTATE FLYWHEEL 360°, AND INSPECT TEETH AND RING GEAR REPLACED IF DAMAGED.
STARTER ENGAGES, SPINS OUT BEFORE ENGINE STARTS.	1. BROKEN TEETH ON STARTER RING GEAR.	1. REMOVE STARTER. INSPECT RING GEAR AND REPLACE IF NECESSARY.
	2. STARTER ASSEMBLY FAULTY.	2. IF ALL OTHER STARTING SYSTEM COMPONENTS AND CIRCUITS CHECK OK, REPLACE STARTER ASSEMBLY.
STARTER DOES NOT DISENGAGE.	1. STARTER IMPROPERLY INSTALLED.	1. INSTALL STARTER. TIGHTEN STARTER MOUNTING HARDWARE TO CORRECT TORQUE SPECIFICATIONS.
	2. STARTER RELAY FAULTY.	2. REFER TO RELAY TEST, IN THIS SECTION. REPLACE RELAY, IF NECESSARY.
	3. IGNITION SWITCH FAULTY.	3. REFER TO IGNITION SWITCH TEST, IN THE STEERING SECTION. REPLACE SWITCH, IF NECESSARY.
	4. STARTER ASSEMBLY FAULTY.	4. IF ALL OTHER STARTING SYSTEM COMPONENTS AND CIRCUITS CHECK OK, REPLACE STARTER ASSEMBLY.
	5. FAULTY TEETH ON RING GEAR.	5. ROTATE FLYWHEEL 360°, AND INSPECT TEETH AND RING GEAR REPLACED IF DAMAGED.

DIAGNOSIS AND TESTING - FEED CIRCUIT RESISTANCE TEST

Before proceeding with this operation, review Diagnostic Preparation and Starter Feed Circuit Tests. The following operation will require a voltmeter, accurate to 1/10 of a volt.

CAUTION: Ignition and Fuel systems must be disabled to prevent engine start while performing the following tests.

(1) To disable the Ignition and Fuel systems, disconnect the Automatic Shutdown Relay (ASD). The ASD relay is located in the Power Distribution Center (PDC). Refer to the PDC cover for proper relay location.

(2) Gain access to battery terminals.

(3) With all wiring harnesses and components properly connected, perform the following:

(a) Connect the negative lead of the voltmeter to the battery negative post, and positive lead to the battery negative cable clamp. Rotate and hold the ignition switch in the START position. Observe the voltmeter. If voltage is detected, correct poor contact between cable clamp and post.

(b) Connect positive lead of the voltmeter to the battery positive post, and negative lead to the battery positive cable clamp. Rotate and hold the ignition switch key in the START position. Observe the voltmeter. If voltage is detected, correct poor contact between the cable clamp and post.

(c) Connect negative lead of voltmeter to battery negative terminal, and positive lead to engine block near the battery cable attaching point. Rotate and hold the ignition switch in the START position. If voltage reads above 0.2 volt, correct poor contact at ground cable attaching point. If voltage reading is still above 0.2 volt after correcting poor contacts, replace ground cable.

(4) Connect positive voltmeter lead to the starter motor housing and the negative lead to the battery negative terminal. Hold the ignition switch key in the START position. If voltage reads above 0.2 volt, correct poor starter to engine ground.

(a) Connect the positive voltmeter lead to the battery positive terminal, and negative lead to bat-

STARTING (Continued)

tery cable terminal on starter solenoid. Rotate and hold the ignition switch in the START position. If voltage reads above 0.2 volt, correct poor contact at battery cable to solenoid connection. If reading is still above 0.2 volt after correcting poor contacts, replace battery positive cable.

(b) If resistance tests do not detect feed circuit failures, replace the starter motor.

DIAGNOSIS AND TESTING - FEED CIRCUIT TEST

NOTE: The following results are based upon the vehicle being at room temperature.

The following procedure will require a suitable volt-ampere tester (Fig. 1).

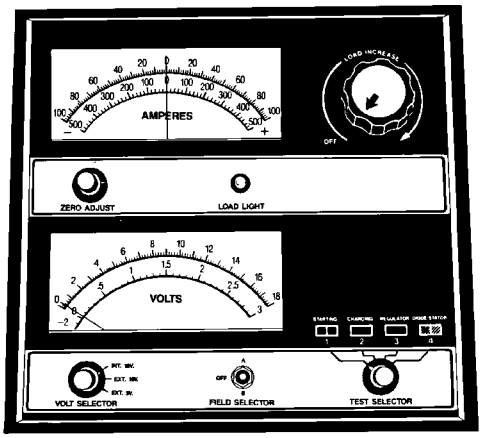

Fig. 1 Volt Ampere Tester

CAUTION: Before performing any starter tests, the ignition and fuel systems must be disabled.

(1) Check battery before performing this test. Battery must be fully charged.

(2) Connect a volt-ampere tester to the battery terminals. Refer to the operating instructions provided with the tester being used.

(3) To disable the ignition and fuel systems, disconnect the Automatic Shutdown Relay (ASD). The ASD relay is located in the Power Distribution Center (PDC). Refer to the PDC cover for proper relay location.

(4) Verify that all lights and accessories are OFF, and the transmission shift selector is in the PARK and SET parking brake.

CAUTION: Do not overheat the starter motor or draw the battery voltage below 9.6 volts during cranking operations.

(5) Rotate and hold the ignition switch in the START position. Observe the volt-ampere tester (Fig. 1).

- If voltage reads above 9.6 volts, and amperage draw reads above 280 amps, check for engine seizing or faulty starter.
- If voltage reads 12.4 volts or greater and amperage reads 0 to 10 amps, check for corroded cables and/or bad connections.
- Voltage below 9.6 volts and amperage draw above 300 amps, the problem is the starter. Replace the starter refer to starter removal.

(6) After the starting system problems have been corrected, verify the battery state-of-charge and charge battery if necessary. Disconnect all testing equipment and connect ASD relay. Start the vehicle several times to assure the problem has been corrected.

SPECIFICATIONS - TORQUE

DESCRIPTION	N·m	Ft. Lbs.	In. Lbs.
Starter Mounting Bolts	54	40	
Starter Solenoid Battery Nut	10		90

STARTER MOTOR

REMOVAL

REMOVAL - 4 CYLINDER

(1) Release hood latch and open hood (Fig. 2).

(2) Disconnect and isolate the battery negative cable.

(3) Remove the air cleaner box.

(4) Remove the lower bolt.

(5) Remove the upper bolt and ground wire

(6) Remove starter (Fig. 3).

(7) Disconnect solenoid wire connector from terminal

(8) Remove nut holding B+ wire to terminal.

(9) Disconnect solenoid and B+ wires from starter terminals.

STARTER MOTOR (Continued)

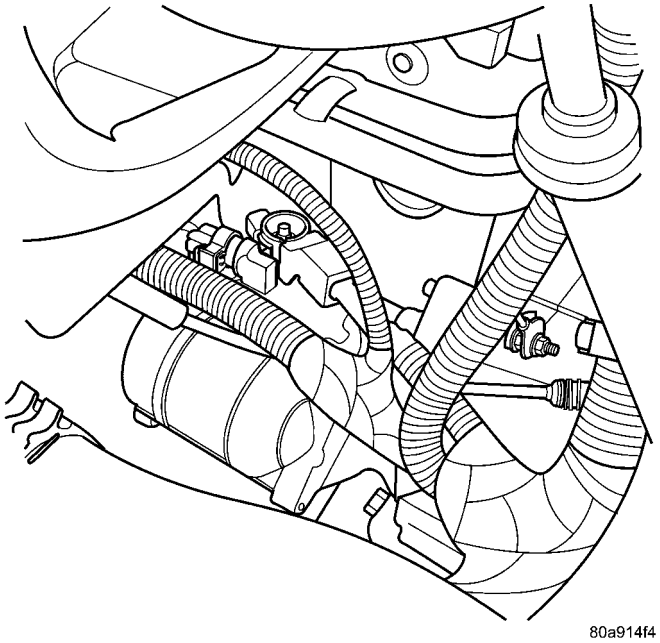

Fig. 2 STARTER - 4 CYLINDER

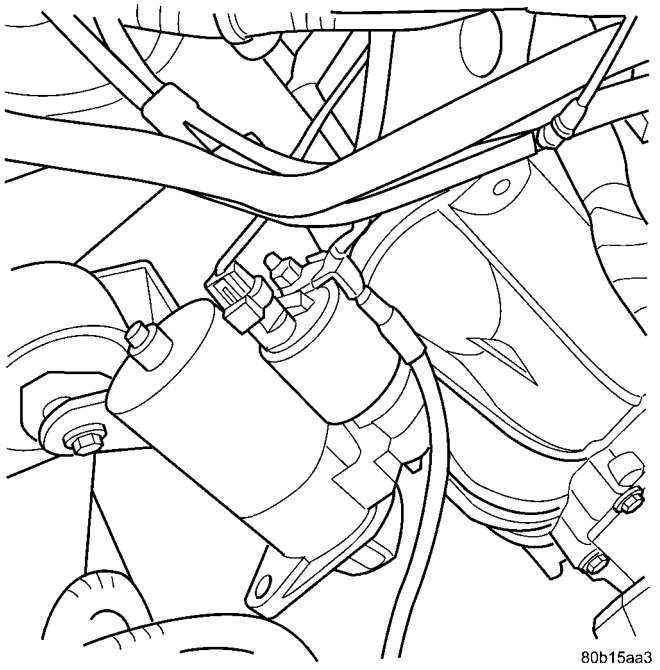

Fig. 3 STARTER REMOVAL - 4 CYLINDER

REMOVAL - 2.7L

(1) Open Hood.

(2) Disconnect the negative battery cable.

(3) Raise vehicle and support.

(4) Disconnect the electrical connector from the O2 sensor.

(5) Remove the O2 sensor from the exhaust manifold (Fig. 4).

(6) Remove the front mount through bolt.

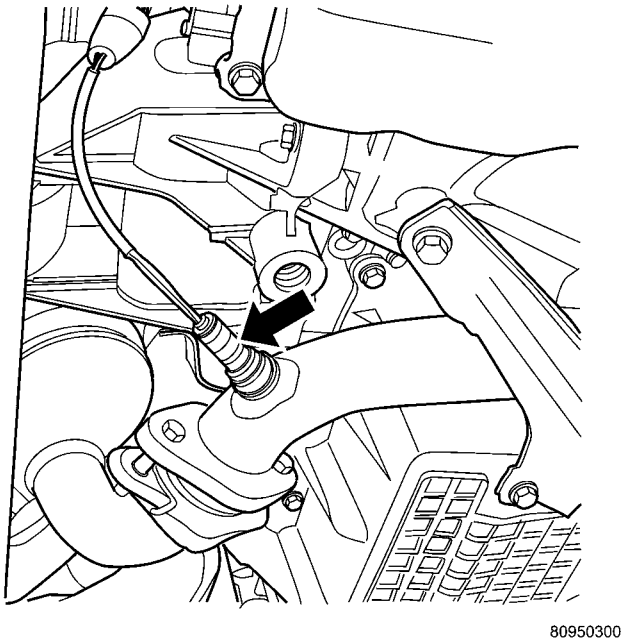

Fig. 4 O2 SENSOR

(7) Remove the front mount bracket from engine block.

(8) Remove the battery cable from starter (Fig. 5).

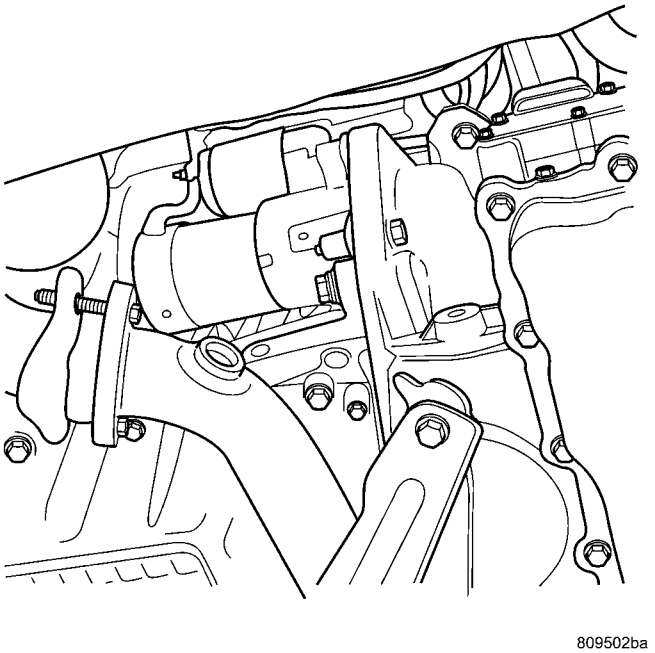

Fig. 5 STARTER MOTOR

(9) Remove the lower starter bolt and remove starter (Fig. 6).

STARTER MOTOR (Continued)

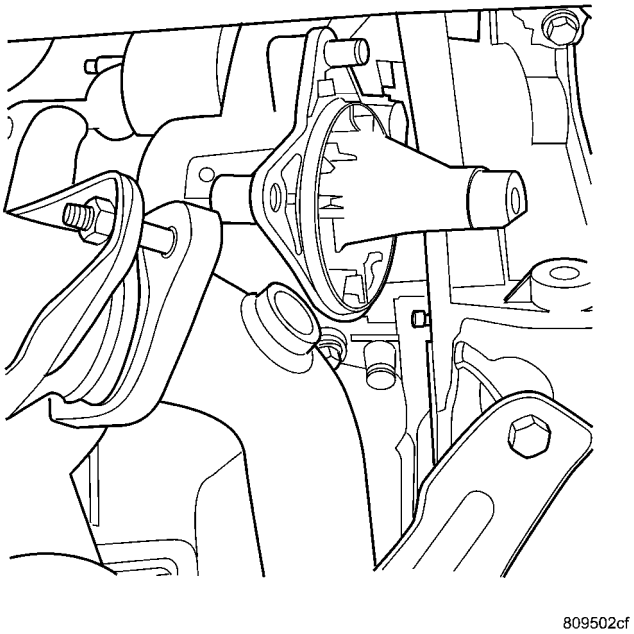

Fig. 6 STARTER MOTOR REMOVAL

INSTALLATION

INSTALLATION - 4 CYLINDER

(1) Connect solenoid and B+ wires to starter terminals.
(2) Install nut holding B+ wire to terminal.
(3) Connect solenoid wire connector to terminal
(4) Install starter (Fig. 3).
(5) Install the upper bolt.
(6) Install the lower bolt.
(7) Install the air cleaner box.
(8) Connect the battery negative cable.

INSTALLATION - 2.7L

(1) Install starter to transmission.
(2) Start the upper starter bolt.
(3) Start the lower bolt and snug it so that the starter will not move.
(4) Remove the upper bolt.
(5) Connect the battery cable and torque nut to 8.5 N·m (75 in. lbs.).
(6) Install the front mount bracket and check heat shield location.
(7) Install bolt the upper bolt and torque bolt to 54 N·m (40 ft. lbs.)
(8) Install the lower and torque bolt to 54 N·m (40 ft. lbs.)
(9) Install the front mount through bolt and torque bolt to 61 N·m (45 ft.. lbs.)
(10) Install the O2 sensor and torque to 27 N·m (20 ft. lbs.)
(11) Lower vehicle.
(12) Connect the negative battery cable.

STARTER MOTOR RELAY

DESCRIPTION

The Starter Relay is a micro relay located in the Power Distribution Center (PDC), positioned in the left front corner of the engine compartment.

OPERATION

As battery power is applied to the relay from the ignition switch, battery power is applied to the starter motor through the relay to the starter solenoid.

REMOVAL

The relay is located in the Power Distribution Center (PDC). Refer to the PDC cover for relay location.

STARTER SOLENOID

OPERATION

The Starter Solenoid is a switching device used to activate the high amperage starter motor circuit from a low amperage control circuit.

HEATED SYSTEMS

TABLE OF CONTENTS

page

HEATED GLASS SYSTEM 1

HEATED SEAT SYSTEM 5

HEATED GLASS SYSTEM

TABLE OF CONTENTS

page

HEATED GLASS SYSTEM
DESCRIPTION 1
OPERATION 1
DIAGNOSIS AND TESTING - HEATED GLASS SYSTEM 2
REAR WINDOW DEFOGGER RELAY
DESCRIPTION 2
OPERATION 2
DIAGNOSIS AND TESTING - REAR WINDOW DEFOGGER RELAY 3
REMOVAL 3
INSTALLATION 3
REAR WINDOW DEFOGGER SWITCH
DESCRIPTION 3
OPERATION 3
DIAGNOSIS AND TESTING - REAR WINDOW DEFOGGER SWITCH 3
REAR WINDOW DEFOGGER GRID LINES
DIAGNOSIS AND TESTING – REAR WINDOW DEFOGGER GRID LINES 4
STANDARD PROCEDURE - REAR WINDOW DEFOGGER GRID LINE REPAIR 4

HEATED GLASS SYSTEM

DESCRIPTION

The rear window defogger system is used to defog and deice the rear window in cases of freeze up and humid conditions. The rear window defogger switch is located to the right of the mode select knob on the HVAC control module on this model.

The Rear Window Defogger electrical system involves the operation of the Manual Temperature Control (MTC) head, the Body Control Module (BCM), and the rear window defogger relay and wiring. The system consists of a rear glass with two vertical bus bars and a series of electrically connected grid lines fired on the inside surface. The Body Control Module (BCM) operates a relay located in the right side trunk area on all models.

OPERATION

The system consists of a rear glass with two vertical bus bars and a series of electrically connected grid lines on the inside surface. The control switch is located in the HVAC Control Module. The relay is located in the junction block. The timer is located in the Body Control Module (BCM).

Circuit protection for heated grid is provided by:

- A 40 amp EBL fuse located in the power distribution center
- Rear window defogger relay (EBL) located in the Junction Block

When the button is depress to the ON position, current is directed to the rear defogger grid lines. A yellow indicator above the button will illuminate while the defogger is ON. The heated grid lines will heat the rear glass and clear the window surface of fog or frost.

CAUTION: Grid lines can be damaged or scraped off with sharp instruments, care should be taken in cleaning glass or removing foreign materials, decals or stickers. Normal glass cleaning solvents or hot water used with rags or toweling is recommended.

HEATED GLASS SYSTEM (Continued)

DIAGNOSIS AND TESTING - HEATED GLASS SYSTEM

Electrically heated rear window defogger operation can be checked in vehicle in the following manner:

(1) Turn ignition switch to the ON position.

(2) Make sure defogger switch is OFF.

(3) Remove the battery negative remote cable from the terminal. Using a ammeter (capable of a 30 AMP range), connect the ammeter is series between the battery cable and the remote terminal. Turn the Defogger control switch ON, a distinct increase in amperage draw should be noted.

(4) The rear window defogger operation can be checked by feeling the glass. A distinct difference in temperature between the grid lines and adjacent clear glass can be detected in 3 to 4 minutes of operation.

(5) Using a DC voltmeter (Fig. 1) contact terminal B with the negative lead, and terminal A with the positive lead. The voltmeter should read 10-14 volts.

(6) Step 3, Step 4, and Step 5 above will confirm system operation. Indicator light illumination means that there is power available at the output of the relay only, and does not necessarily verify system operation.

(7) If the indicator light is not on, then check fuse #6 in the junction block.

(8) If turning the switch ON produced no distinct current draw on the ammeter the problem should be isolated in the following manner:

(a) Confirm the ignition switch is ON.

(b) Ensure that the heated rear glass feed wire is connected to the terminal or pigtail and that the ground wire is in fact grounded.

(c) Ensure that the 40 amp EBL fuse in the Power Distribution Center is OK.

(9) When the above steps have been completed and the system is still inoperative, one or more of the following is defective:

(a) Control switch in the HVAC control module

(b) Rear window defogger relay (EBL) in the Junction Block

(c) Timer circuit in the Body Control Module

(d) Rear window grid lines, all grid lines would have to be broken or one of the feed wires are not connected for the system to be inoperative.

(10) If depressing the switch button ON produces severe voltmeter deflection, the circuit should be closely checked for a shorting condition.

(11) If the system operation has been verified but indicator bulb does not light, check fuse 6 in the junction block. If not OK, replace as necessary. If OK, test the HVAC control module.

(12) For detailed wiring information, refer to **Wiring Diagrams**.

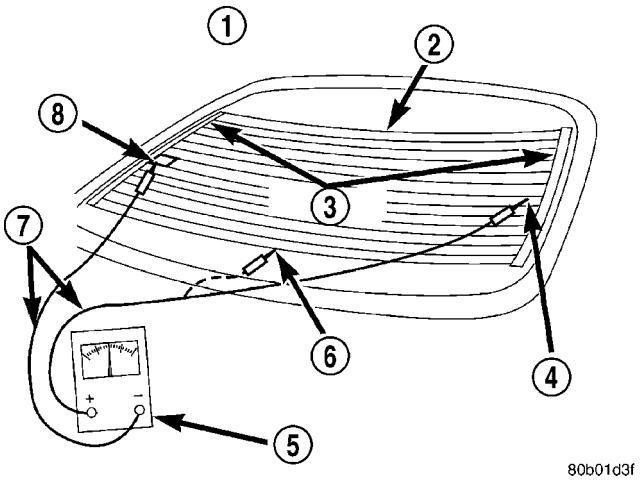

Fig. 1 Grid Line Test

1 - VIEW FROM INSIDE VEHICLE
2 - REAR WINDOW DEFOGGER
3 - BUS BARS
4 - VOLTAGE FEED (A)
5 - VOLTMETER
6 - MID-POINT (C)
7 - PICK-UP LEADS
8 - GROUND (B)

REAR WINDOW DEFOGGER RELAY

DESCRIPTION

The rear window defogger relay is an electromechanical device that switches fused battery current to the rear glass heating grid and the Light-Emitting Diode (LED) indicator of the rear window defogger switch, when the Body Control Module (BCM) rear window defogger timer and logic circuitry grounds the relay coil.

The rear window defogger relay is a International Standards Organization (ISO) relay. Relays conforming to the ISO specifications have common physical dimensions, current capacities, terminal patterns, and terminal functions.

The rear window defogger relay cannot be repaired or adjusted and, if faulty or damaged, it must be replaced.

OPERATION

The ISO relay consists of an electromagnetic coil, a resistor or diode, and three (two fixed and one movable) electrical contacts. The movable (common feed) relay contact is held against one of the fixed contacts (normally closed) by spring pressure. When the electromagnetic coil is energized, it draws the movable contact away from the normally closed fixed contact, and holds it against the other (normally open) fixed contact.

REAR WINDOW DEFOGGER RELAY (Continued)

When the electromagnetic coil is de-energized, spring pressure returns the movable contact to the normally closed position. The resistor or diode is connected in parallel with the electromagnetic coil in the relay, and helps to dissipate voltage spikes that are produced when the coil is de-energized.

DIAGNOSIS AND TESTING - REAR WINDOW DEFOGGER RELAY

(1) Check fuses.

(a) Fuse 15 in the Junction Block

(b) 40 amp EBL fuse in the Power Distribution Center.

(2) Remove the rear window defogger relay (EBL) from the Junction Block (Fig. 2).

(3) Using voltmeter, test battery voltage:

(a) Test rear window defogger relay terminals 13 for battery voltage. If voltage is OK, go to Step b. If voltage is not OK, repair A4 circuit.

(b) Test the rear window defogger relay terminal for battery voltage with the key in the run position. If voltage is OK, go to Step c. If voltage is not OK, repair A31circuit.

(c) Use a known good relay. If not OK, repair circuits as necessary. Refer to Wiring Diagrams. If OK, replace relay.

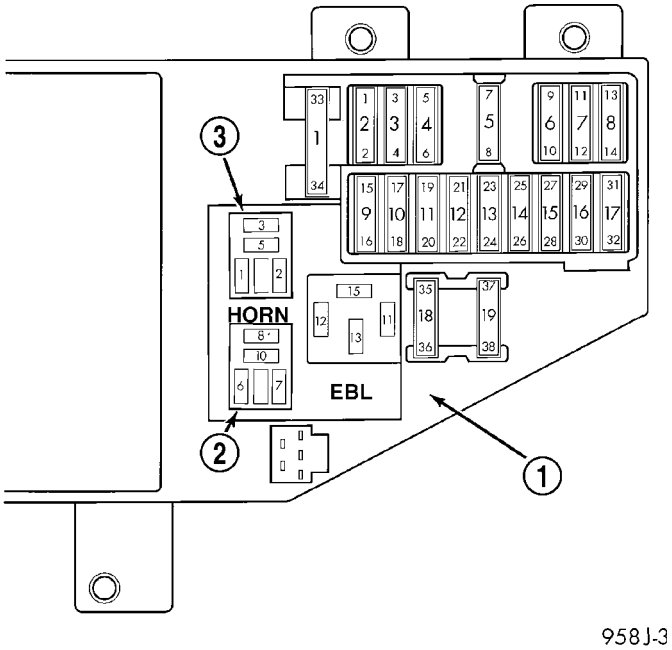

Fig. 2 Rear Window Defogger Relay

1 - CIRCUIT BREAKERS
2 - HORN RELAY
3 - HEADLAMP RELAY

REMOVAL

(1) Disconnect and isolate the battery negative remote cable.

(2) Open the driver's door and remove instrument panel end cover.

(3) Remove Rear Window Defogger (EBL) relay from the Junction Block.

INSTALLATION

(1) Install Rear Window Defogger (EBL) relay in the Junction Block.

(2) Install the instrument panel end cover.

(3) Connect the battery negative remote cable.

REAR WINDOW DEFOGGER SWITCH

DESCRIPTION

The rear window defogger control switch and circuit are integrated into the HVAC control assembly. Refer to the HVAC control assembly for additional information.

OPERATION

When actuating the switch it sends a ground signal to the Body Control Module (BCM). The BCM actuates the relay allowing current to flow through the grid lines for fifteen minutes upon initial actuation. Then ten minutes with each subsequent actuation or until either the switch or ignition is turned off. An indicating lamp illuminates the rear window defogger switch.

DIAGNOSIS AND TESTING - REAR WINDOW DEFOGGER SWITCH

The rear window defogger control switch and timer circuit may be tested in the vehicle with or without a scan tool, such as the DRB III®.

TESTING WITH SCAN TOOL

Using a scan tool, refer to the proper Body Diagnostic Procedures Manual.

TESTING WITHOUT SCAN TOOL

(1) Remove the HVAC control head from the instrument panel however, do not disconnect any of the electrical connectors if possible.

(2) Using a ohmmeter, check leads between Pins 5 and 1 of the HVAC electrical connector. Depress the rear window defogger button and the resistance reading should be 360 ohms (± 10%). If not OK, replace HVAC. If OK, check for the following possible causes:

- Rear window relay (EBL)
- Blown fuse
- Cut wire
- Poor ground
- Poor connection
- Defective BCM
- Bulkhead connector inoperative

REAR WINDOW DEFOGGER SWITCH (Continued)

Refer to **Wiring Diagrams** for complete circuit diagrams.

REAR WINDOW DEFOGGER GRID LINES

DIAGNOSIS AND TESTING – REAR WINDOW DEFOGGER GRID LINES

The horizontal grid lines and vertical bus bar lines printed and fired on inside surface of rear window glass comprise an electrical parallel circuit. The electrically conductive lines are composed of a silver-ceramic material which when fired on glass becomes bonded to the glass and is highly resistant to abrasion. It is possible, however, that a break may occur in an individual grid line resulting in no current flow through the line. To detect breaks in grid lines the following procedure is required:

(1) Turn ignition switch to the ON position. Depress the control switch button to ON position. The indicator light should come on.

(2) Using a DC voltmeter with 0-15 volt range, contact the ground terminal with negative lead of voltmeter. With positive lead of voltmeter, contact feed terminal. The voltmeter should read 10-14 volts. A lower voltage reading indicates a poor ground connection.

(3) Connect the negative lead of voltmeter to a good body ground point. The voltage reading should not be more than two tenth of a volt difference. If more than two tenth of a volt repair the ground circuit.

(4) Connect negative lead of voltmeter to ground terminal and touch each grid line at Mid-Point with Positive lead. A reading of approximately 6 volts indicates a line is good. A reading of 0 volts indicates a break in line between Mid-Point and feed terminal. A reading of 10-14 volts indicates a break between Mid-Point and ground terminal. Move toward break and voltage will change as soon as break is crossed. Refer to **Wiring Diagrams** for circuit information.

STANDARD PROCEDURE - REAR WINDOW DEFOGGER GRID LINE REPAIR

WARNING: THE REPAIR KIT MAY CAUSE SKIN OR EYE IRRITATION. THE KIT CONTAINS EPOXY RESIN AND AMINE TYPE HARDENER AND HARMFUL:

- **DO NOT TAKE INTERNALLY, IF SWALLOWED INDUCE VOMITING AND CALL A PHYSICIAN IMMEDIATELY.**
- **IF SKIN CONTACT OCCURS, WASH AFFECTED AREAS WITH SOAP AND WATER.**
- **IF EYE CONTACT OCCURS, FLUSH WITH PLENTY OF WATER.**

USE WITH ADEQUATE VENTILATION. DO NOT USE NEAR FIRE OR OPEN FLAME THE CONTENTS CONTAIN FLAMMABLE SOLVENTS. KEEP OUT OF REACH OF CHILDREN.

The repair of the grid lines or the terminal is possible using the Mopar® Grid Line Repair Package or equivalent.

(1) Mask repair area so conductive epoxy can be extended onto the line or the bus bar (Fig. 3).

(2) Follow instructions in repair kit for preparing damaged area.

(3) Remove package separator clamp and mix plastic conductive epoxy thoroughly. Fold in half and cut center corner to dispense epoxy.

(4) Apply conductive epoxy through slit in masking tape. Overlap both ends of the break by 19 mm (3/4 inch).

(5) For a terminal or pigtail replacement, mask adjacent areas so epoxy can be extended onto line as well as bus bar. Apply a thin layer of epoxy to area where terminal was fastened and to adjacent line.

(6) Apply a thin layer of conductive epoxy on terminal and place terminal on desired location. To prevent terminal from moving while the epoxy is curing, it must be wedged or clamped.

(7) Carefully remove masking tape from grid line.

CAUTION: Do not allow the glass surface to exceed 204°C (400°F), glass may fracture.

(8) Allow epoxy to cure 24 hours at room temperature or use heat gun with a 260° to 371°C (500° to 700°F) range for 15 minutes. Hold gun approximately 254 mm (10 inches) from repaired area.

(9) After conductive epoxy is properly cured remove wedge from terminal and check out operation of rear window defogger. Do not attach connectors until curing is complete.

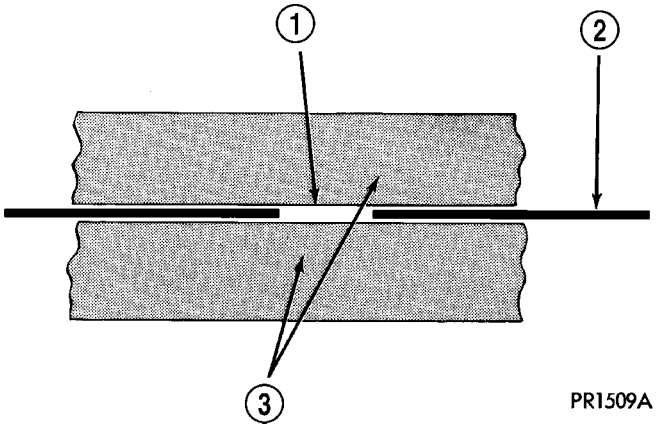

Fig. 3 Grid Line Repair

1 - BREAK
2 - GRID LINE
3 - MASKING TAPE

HEATED SEAT SYSTEM

TABLE OF CONTENTS

page

HEATED SEAT SYSTEM
DESCRIPTION 5
OPERATION 5
DIAGNOSIS AND TESTING - HEATED SEAT SYSTEM 6
HEATED SEAT ELEMENT
DESCRIPTION 6
OPERATION 6
DIAGNOSIS AND TESTING - HEATED SEAT ELEMENT 7
REMOVAL 7
INSTALLATION 7
HEATED SEAT SWITCH
DESCRIPTION 8
OPERATION 8
DIAGNOSIS AND TESTING - HEATED SEAT SWITCH 8
REMOVAL 9
INSTALLATION 9

HEATED SEAT SYSTEM

DESCRIPTION

Individually controlled electrically heated front seats are available as an factory-installed option on this model. Vehicles with this option can be visually identified by the heated seat switch mounted in the center console. The heated seat system allows the front seat driver and passenger to select from six different levels of supplemental seat heating, or no seat heating to suit their individual comfort requirements. The heated seat system for this vehicle includes the following major components, which are explained in detail later in this section:

- **Heated Seat Switch** - One heated seat switch is used per vehicle. The switch is mounted in the center console, behind the gear selector and has two rotary knobs, one for the driver and one for the passenger front seats. Each rotary knob has six different detents (0-6), to indicate the desired level of seat heating. Zero(0) being off and 6 for the highest level of seat heating. There are three Light Emitting Diodes (LED's) in the heated seat switch. The first LED illuminates the heated seat symbol on the switch anytime the ignition switch is in the ON position. The remaining two LED's illuminate the selected numbers on the switch, indicating that the heated seat system is on and the level of seat heating selected.
- **Heated Seat Module** - Two heated seat modules are used per vehicle, these modules contain the solid state electronic control and diagnostic logic circuitry for the entire heated seat system. Each heated seat module is mounted under each of the front seat cushions. Refer to the Electronic Control Modules section of the service manual for additional heated seat module information.
- **Heated Seat Elements** - Four heated seat elements are used per vehicle, one in each front seat cushion and one in each front seat back. These elements, which are integral to the individual front seat cushion and front seat back trim covers are connected in series with the heated seat module.
- **Heated Seat Sensor** - Two heated seat sensors are used per vehicle, one for each front seat. The heated seat sensors are integrated into each of the seat cushion heating elements. The temperature sensor is a negative temperature coefficient thermistor.
- **Low Voltage Cut-Out Relay** - The (12v) power to the heated seat elements are supplied through a relay that removes power from the heating elements when a low battery voltage is sensed by the powertrain control module (PCM). This micro-relay is located in cavity #8 in the Power Distribution Center (PDC).

Following are general descriptions of the major components in the heated seat system. See the owner's manual in the vehicle glove box for more information on the features, use and operation of the heated seat system. Refer to **Wiring Diagrams** for the location of complete heated seat system wiring diagrams.

OPERATION

The heated seat module receives fused battery current through the low voltage cut-out relay in the Power Distribution Center (PDC). This relay is controlled by the Body Control Module (BCM) only when the ignition switch is in the run position. The heated seat switches receive battery current through a fused ignition switch output (run) circuit also when the ignition switch is in the Run position. The heated seat module shares a common ground circuit with each of the heated seat elements. The heated seat elements will only operate when the surface temper-

ature of the seat cushion cover at the heated seat sensors is below the designed temperature set points of the system and the system voltage is above the cut-out level.

The heated seat module will automatically turn off the heated seat elements if it detects a short in the heated seat element circuit or a heated seat sensor value that is out of range. The heated seat system will remain ON anytime the ignition switch is turned to the ON position and the heated seat switch is at any of the #1 through #6 positions.

The heated seat module monitors inputs from the heated seat sensors and the heated seat switches. In response to these inputs the heated seat module uses its internal programming to control outputs to the heated seat elements in both front seats and to control the heated seat LED indicator lamps located in both of the heated seat switches.

DIAGNOSIS AND TESTING - HEATED SEAT SYSTEM

Refer to **Wiring Diagrams** for the location of complete heated seat system wiring diagrams. Before testing the individual components in the heated seat system, perform the following preliminary checks:

- If the heated seat switch numerals (1-6) do not illuminate with the ignition switch in the ON position and the heated seat switch in 1-6 positions, check the fuse that supplies the switches in the junction block. If the fuse checks OK, test the heated seat switch as described in this section.
- If the heated seat switch numerals (1-6) illuminate, but the heating elements do not heat, check the low voltage cut-out relay in the PDC. If the relay checks OK, test the seat heating elements as described in this section.

HEATED SEAT ELEMENT

DESCRIPTION

Vehicles equipped with the optional heated seat system have two sets of electrically operated heating element grids located in each outboard seating position of the front seat, one set for the seat cushion and the other set for the seat back. Each of the heated seat element grids consists of a single length of resistor wire that is routed in a zigzag pattern and captured between the leather trim cover and the foam rubber backing on the underside of its respective seat cushion trim cover and seat back trim cover assembly. Short pigtail wires with connectors are soldered to each end of each resistor wire element grid, which connect all of the element grids for each seating position to each other in series with the heated seat module through the seat wire harness.

One temperature sensor is used for each outboard seating position of the front seat, and it is located in the center insert area of the seat cushion cover. The heated seat sensors and their pigtail wires are also captured between the leather trim cover and the foam rubber backing on the underside of their respective seat cushion trim cover assemblies. The heated seat sensors are Negative Thermal Coefficient (NTC) thermistors. The sensors for both front seats receive a voltage feed from a single output of the heated seat module, but the module receives individual sensor inputs from the driver side and passenger side sensors.

The heated seat elements and sensors cannot be repaired. If damaged or faulty, the elements and sensors must be replaced.

OPERATION

One end of the heated seat element resistor wire is connected to a ground feed at all times through a splice in the heated seat module ground circuit. Battery current is directed to the other end of the heated seat element resistor wire by the energized N-channel Field Effect Transistor (N-FET) located within the heated seat module. The heated seat module will energize the N-FET only when the heated seat switch is in one of the six positions and the heated seat sensor indicates that the seat cushion surface temperature is below the selected (Low or High) temperature set point. As electrical current passes through the heating element grid, the resistance of the wire used in the element disperses some of that electrical current in the form of heat. The heat produced by the heated seat element grid then radiates through the underside of the seat cushion and seat back trim covers, warming the seat cover and its occupant.

The resistance of the heated seat sensor increases and decreases as the surface temperature of the seat cushion cover changes. The heated seat module supplies each sensor with a voltage feed, then detects the sensor resistance by monitoring the voltage of the separate sensor return circuits. The heated seat module compares the heated seat sensor resistance (seat cushion surface temperature) with the heated seat switch resistance (Low or High set point) to determine when the heated seat element grids need to be cycled on or off in order to maintain the selected temperature set point.

A low voltage cut-out relay controls the 12v battery feed to the heated seat elements. When the system voltage is above 12.2 volts the relay will supply voltage to the elements. When the PCM senses low system voltage, below 11.7 volts, a message will be sent to the BCM to turn off the low voltage relay to prevent battery discharge during normal operation. The

HEATED SEAT ELEMENT (Continued)

power will be restored when the system voltage rises above 12.2 volts for 14 seconds and stays there. The cycle will repeat if the system voltage again drops below 11.7 volts.

DIAGNOSIS AND TESTING - HEATED SEAT ELEMENT

Refer to **Heated Seat System** in this section for the location of the proper heated seat system diagnosis and testing procedures. To check the heated seat element and sensor circuits, proceed as follows. The wire harness connectors for the seat cushion heated seat element and sensor and for the seat back heated seat element are located under the seat, near the rear edge of the seat cushion frame. Refer to **Wiring Diagrams** for the location of complete heated seat system wiring diagrams.

NOTE: When checking heated seat elements for continuity, be certain to move the heating element being checked. Moving the element, such as siting in the seat will eliminate the possibility of an intermittent open in the element which would only be evident if the element was in a certain position. Failure to check the element in various positions could result in an incomplete test.

SEAT CUSHION

(1) Disconnect and isolate the battery negative cable. Disconnect the green 4-way heated seat wire harness connector. Using an ohmmeter, check for continuity between pins A and B of the seat cushion wire harness connector (Fig. 1). There should be continuity. If OK, test the seat back element as described below. If not OK, check the green 2-way seat cushion connector. If OK, replace the faulty seat cushion cover and element assembly.

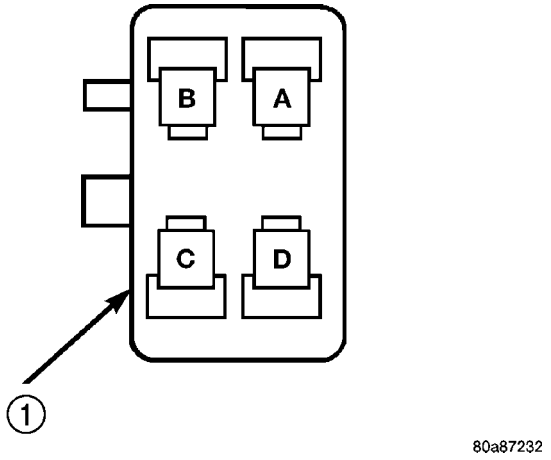

Fig. 1 Seat Cushion Element Connector

1 - REAR VIEW OF HEATED SEAT SWITCH

SEAT BACK

(1) Disconnect and isolate the battery negative cable. Disconnect the green 2-way heated seat back wire harness connector. Using an ohmmeter, check the resistance between the two pins. There should be continuity. If OK, test the heated seat control module as described in this section. If not OK, replace the faulty seat back cover and element assembly.

REMOVAL

Do not remove the original heating element from the seat or seat back cushion/trim covers. The original element is permanently attached and cannot be removed without permanent damage. Models with replaceable heating elements are designed to be applied directly over the original heating elements.

(1) Disconnect and isolate the negative battery cable.

(2) Remove the appropriate seat cushion or seat back trim cover. Refer to the Body section of the service manual for the procedures.

(3) Disconnect the inoperative heated seat cushion or seat back element electrical connectors.

(4) Locate the wires leading from the inoperative heating element and cut them off flush with the edge of the original heating element.

INSTALLATION

(1) Peel off the adhesive backing on the back of the replacement heating element and stick directly on the foam cushion or on top of original heating element.

CAUTION: During the installation of the replacement heating element, be careful not to fold or crease the element assembly. Folds or creases will cause premature failure.

(2) Connect the new heating element electrical connectors (Fig. 2).

(3) Connect the negative battery cable.

(4) Verify heated seat system operation.

HEATED SEAT ELEMENT (Continued)

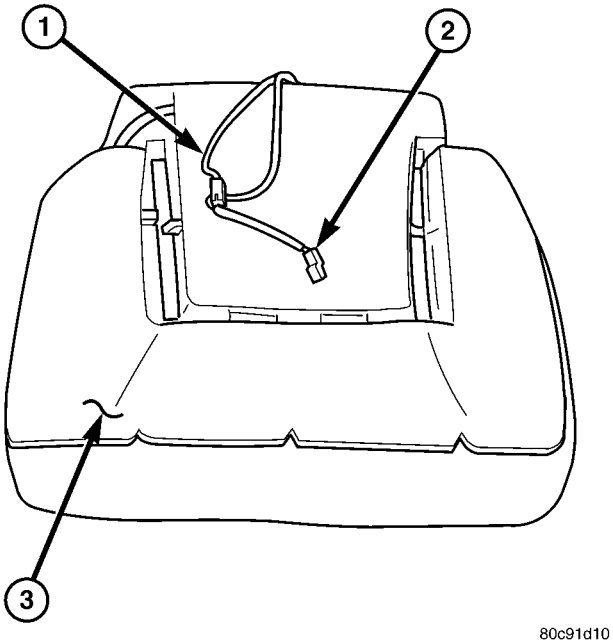

Fig. 2 HEATING ELEMENT INSTALLED

1 - SEAT BACK WIRE HARNESS
2 - HEATED SEAT WIRE HARNESS CONNECTOR
3 - HEATED SEAT CUSHION ELEMENT

(5) Install the appropriate seat cushion or seat back trim cover. Make certain the seat wire harness is correctly routed through the seat and seat back. The excess wire between the cushion and back elements should be securely tucked between the rear of the cushion foam and the trim cover.

HEATED SEAT SWITCH

DESCRIPTION

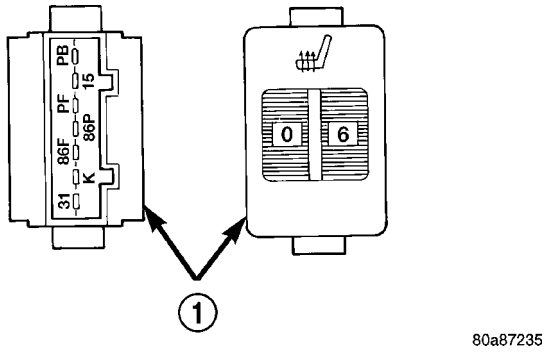

Fig. 3 JR Heated Seat Switch

1 - REAR AND FRONT VIEW OF HEATED SEAT SWITCH

The heated seat switch used on vehicles with this option is mounted in the center console. The switch is snapped into a mounting hole in a center console trim panel. The heated seat switch incorporates two rotary knobs, one for the driver and one for the front seat passenger (Fig. 3). These knobs have numerals 0-6 to indicate the desired rate of supplemental seat heating. The instrument panel wire harness connectors for the heated seat switch is keyed to match the connector receptacle on the switch so that the heated seat switch can only be connected in the proper orientation.

The heated seat switch cannot be repaired. If the indicator or back lighting lamps are faulty or damaged, the individual heated seat switch unit must be replaced.

OPERATION

The heated seat switches receive battery current through a fused ignition switch output (run) circuit when the ignition switch is in the On position. The two six-position rotating-type switches provide a hard-wired voltage signal to the heated seat module to power the heated seat element of the selected seat and maintain the requested temperature setting.

There are three Light Emitting Diodes (LED's) in the heated seat switch. The first LED illuminates the heated seat symbol on the switch anytime the ignition switch is in the On position. The remaining LED's illuminate the numbers on the switch, indicating that the system is on..

DIAGNOSIS AND TESTING - HEATED SEAT SWITCH

Refer to **Wiring Diagrams** for the location of complete heated seat system wiring diagrams.

WARNING: DISABLE THE AIRBAG SYSTEM BEFORE ATTEMPTING ANY STEERING WHEEL, STEERING COLUMN, OR INSTRUMENT PANEL COMPONENT DIAGNOSIS OR SERVICE. DISCONNECT AND ISOLATE THE BATTERY NEGATIVE (GROUND) CABLE, THEN WAIT TWO MINUTES FOR THE AIRBAG SYSTEM CAPACITOR TO DISCHARGE BEFORE PERFORMING FURTHER DIAGNOSIS OR SERVICE. THIS IS THE ONLY SURE WAY TO DISABLE THE AIRBAG SYSTEM. FAILURE TO TAKE THE PROPER PRECAUTIONS COULD RESULT IN ACCIDENTAL AIRBAG DEPLOYMENT AND POSSIBLE PERSONAL INJURY.

(1) Remove the heated seat switch as described in this group and inspect the connector for damage.

(2) Unplug the 7-way connector from the switch and check the harness terminals for proper ignition voltage and ground. Refer to **Wiring Diagrams** for complete heated seat system wiring diagrams.

HEATED SEAT SWITCH (Continued)

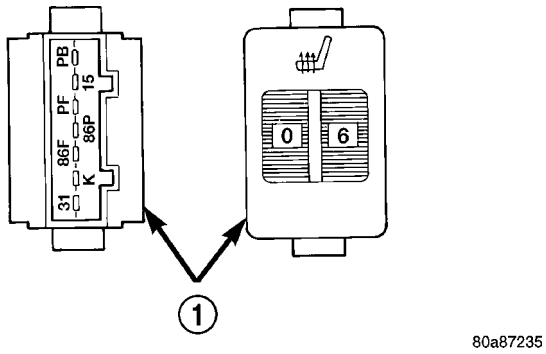

Fig. 4 JR Heated Seat Switch

1 - REAR AND FRONT VIEW OF HEATED SEAT SWITCH

CHECKING DRIVERS HEATED SEAT SWITCH	
SWITCH POSITION	RESISTANCE VALUE (Ω) BETWEEN PINS PB & 86B
0	OPEN
1	.4 OHM
2	100 OHMS
3	200 OHMS
4	300 OHMS
5	400 OHMS
6	.500 K OHMS (500 OHMS)

(3) Check the drivers switch for resistance between pin terminals **PB and 86B** (Fig. 4). Resistance should match the specifications shown in the table above, as the switch is rotated from #0 – #6. If not OK, replace the heated seat switch.

(4) Check the passenger switch for resistance between pin terminals **PF and 86F** (Fig. 4). Resistance should match the specifications shown in the table below, as the switch is rotated from #0 – #6. If OK, test the heated seat module. If not OK, replace the heated seat switch.

CHECKING PASSENGER HEATED SEAT SWITCH	
SWITCH POSITION	RESISTANCE VALUE (Ω) BETWEEN PINS PF & 86F
0	OPEN
1	.4 OHM
2	100 OHMS
3	200 OHMS
4	300 OHMS
5	400 OHMS
6	.500 K OHMS (500 OHMS)

REMOVAL

(1) Disconnect and isolate the battery negative cable.

(2) Remove the center console. Refer to the Body section of this manual for the procedure.

(3) Disconnect the center console wire harness connector from the connector receptacle on the back of the heated seat switch.

(4) Remove the heated seat switch by depressing the retaining tabs and pushing straight out of the center console.

INSTALLATION

NOTE: Be certain to install the switch in the correct orientation, drivers switch on the left and passenger on the right.

(1) Connect the center console wire harness connector on the connector receptacle on the back of the heated seat switch.

(2) Verify switch/system operation.

(3) Install the center console. Refer to the Body section of this manual for the procedure.

(4) Install the heated seat switch in the center console mounting hole.

(5) Reconnect the battery negative cable.

HORN

TABLE OF CONTENTS

page

HORN SYSTEM
DESCRIPTION 1
OPERATION 1
DIAGNOSIS AND TESTING - HORN SYSTEM . . . 1
HORN
DIAGNOSIS AND TESTING - HORN 3
REMOVAL 3
INSTALLATION 3
HORN RELAY
DESCRIPTION 4
OPERATION 4
DIAGNOSIS AND TESTING - HORN RELAY 4
HORN SWITCH
DESCRIPTION 4

HORN SYSTEM

DESCRIPTION

WARNING: ON VEHICLES EQUIPPED WITH AIRBAG, REFER TO ELECTRICAL, RESTRAINTS FOR SAFETY PRECAUTIONS. DISCONNECT THE NEGATIVE CABLE FROM THE BATTERY BEFORE SERVICING COMPONENTS INVOLVING THE AIRBAG SYSTEM. ACCIDENTAL DEPLOYMENT OF AIRBAG AND PERSONAL INJURY CAN RESULT.

The horn circuit consists of a horn switch, clock spring, wiring, horn relay, and horns. The horn switch is a membrane switch located in the airbag trim cover. The horn is located below the right side headlamp.

OPERATION

The horn circuit feed is from the fuse to the horn relay in the Junction Block. When the horn contact is depressed, it completes the ground circuit. Then the horn relay coil closes a set of contacts which allows current to flow to the horn. The horn is grounded at the shock tower through the headlamp and dash harness. Refer to the appropriate wiring information. The wiring information includes wiring diagrams, proper wire and connector repair procedures, details of wire harness routing and retention, connector pin-out information and location views for the various wire harness connectors, splices and grounds.

DIAGNOSIS AND TESTING - HORN SYSTEM

CAUTION: Continuous sounding of horns will cause horn to fail.

Check fuse 8 in the Junction Block, and refer to Horn System Test table.

Refer to the appropriate wiring information. The wiring information includes wiring diagrams, proper wire and connector repair procedures, details of wire harness routing and retention, connector pin-out information and location views for the various wire harness connectors, splices and grounds.

HORN SYSTEM TEST

CONDITION	POSSIBLE CAUSE	CORRECTION
HORN SOUNDS CONTINUOUSLY. NOTE: IMMEDIATELY UNPLUG HORN RELAY IN THE JUNCTION BLOCK	(1) FAULTY HORN RELAY.	(1) REFER TO HORN RELAY TEST.
	(2) HORN CONTROL CIRCUIT TO RELAY SHORTED TO GROUND.	(2) CHECK HORN RELAY TERMINAL 8 IN THE JUNCTION BLOCK FOR CONTINUITY TO GROUND INDICATES: (A) WIRING HARNESS SHORTED TO GROUND. (B) FIND THE SHORT AND REPAIR AS NECESSARY.

HORN SYSTEM (Continued)

CONDITION	POSSIBLE CAUSE	CORRECTION
	(3) PINCHED HORN SWITCH WIRE UNDER DRIVER AIRBAG MODULE.	(3) REMOVE DRIVER AIRBAG MODULE AND CHECK FOR RUBBING, SHORTED OR LOOSE WIRE CONNECTOR AND REPAIR AS NECESSARY.
	(4) FAULTY HORN SWITCH	(4) REPLACE DRIVER AIRBAG MODULE TRIM.
HORN SOUND INTERMITTENTLY AS THE STEERING WHEEL IS TURNED.	(1) HORN RELAY CONTROL CIRCUIT X3 IS SHORTED TO GROUND INSIDE STEERING COLUMN OR THE WHEEL.	(1) REMOVE DRIVER AIRBAG MODULE AND/OR STEERING WHEEL AS NEEDED. CHECK FOR RUBBING OR LOOSE WIRE/ CONNECTOR, REPAIR AS NECESSARY.
	(2) PINCHED HORN SWITCH WIRE UNDER DRIVER AIRBAG MODULE	(2) REPLACE DRIVER AIRBAG MODULE.
	(3) FAULTY HORN SWITCH	(3) REPLACE DRIVER AIRBAG MODULE TRIM.
	(4) FAULTY CLOCKSPRING	(4) REPLACE CLOCKSPRING
HORN DOES NOT SOUND	(1) CHECK FUSE 8 IN THE JUNCTION BLOCK.	(1) REPLACE FUSE IF BLOWN AS REPAIR AS NECESSARY.
	(2) NO VOLTAGE AT HORN RELAY TERMINALS 6 & 8, AND FUSE IS OK.	(2) NO VOLTAGE, REPAIR OR REPLACE JUNCTION BLOCK AS NECESSARY.
	(3) FAULTY OR DAMAGED HORN.	(3) VOLTAGE AT HORN WHEN HORN SWITCH IS PRESSED, REPLACE HORN.
	(4) FAULTY HORN SWITCH	(4) REPLACE DRIVER AIRBAG MODULE TRIM.
FUSE BLOWS WHEN HORN IS BLOWN	(1) SHORT CIRCUIT IN HORN OR HORN WIRING OR FAULTY RELAY	(1) REMOVE HORN RELAY, CHECK FOR SHORTED HORN OR HORN WIRING. DISCONNECT HORN WIRE HARNESS TO ISOLATE SHORT AND REPAIR AS NECESSARY.
FUSE BLOWS WITHOUT BLOWING HORN	(1) SHORT CIRCUIT IN CIRCUIT FROM STEERING COLUMN SWITCH TO HORN RELAY	(1) REMOVE RELAY, INSTALL NEW FUSE, IF FUSE DOES NOT BLOW REPLACE HORN RELAY. IF FUSE BLOWS WITH RELAY REMOVED, CHECK FOR SHORT TO GROUND WITH OHMMETER ON CIRCUIT BETWEEN TERMINALS 6 & 8 AND THE FUSE TERMINAL. REPAIR AS NECESSARY.
	(2) FAULTY RELAY	(2) REPLACE RELAY
	(3) FAULTY BODY CONTROLLER	(3) REPLACE BODY CONTROLLER

HORN

DIAGNOSIS AND TESTING - HORN

Refer to the appropriate wiring information. The wiring information includes wiring diagrams, proper wire and connector repair procedures, details of wire harness routing and retention, connector pin-out information and location views for the various wire harness connectors, splices and grounds.

Check horn fuse 16 in the Power Distribution Center and fuse 8 in the Junction Block. If fuse is blown refer to FUSE BLOWN. If fuse is OK, refer to FUSE OK.

FUSE BLOWN

(1) Verify condition of battery terminals and voltage, (Refer to 8 - ELECTRICAL/BATTERY SYSTEM - DESCRIPTION). If battery connections and battery charge is OK, go to Step 2.

(2) Using a voltmeter, test for battery voltage at both sides of horn fuse 8. If voltage is OK, on both sides of fuse, go to Fuse OK. If voltage is OK, on one side of fuse, the fuse is blown, go to Step 3.

(3) Using a suitable ammeter in place of the fuse, test amperage draw of the horn circuit. If amperage draw is greater than 20 amps without the horn switch depressed, a grounded circuit exists between the fuse and the horn relay. Go to Step 4. If amperage draw is greater than 20 amps with the horn switch depressed, a grounded circuit exists between the horn relay and the horn. Go to Step 6.

(4) Remove the horn relay from the Junction Block. If the amperage draw drops to 0 amps, the horn switch or circuit is shorted. If amperage does not drop go to Step 5.

(5) Disconnect both horns. If amperage does not drop with both horns disconnected and the horn switch depressed, go to Step 7. If the amperage draw drops go to Step 6.

(6) Disconnect the wire connector from one of the horns. If amperage drops and the connected horn sounds, reverse the procedure, and replace the faulty horn.

(7) Using a continuity tester, with the horns disconnected test continuity of the X2 cavity of the horn relay to ground. If continuity is detected, the circuit is grounded between the Junction Block and the horns. Locate and repair pinched harness. If the amperage draw does not drop to 0 amps, repair short at the Junction Block.

FUSE OK

(1) Remove the horn relay from the Junction Block.

(2) Using a continuity tester, Depress horn switch and test continuity from the X3 cavity of the horn relay to ground.

(a) If continuity is detected, go to Step 3.

(b) If NO continuity, go to Step 4.

(3) Using a suitable jumper wire, jump across the fuse F62 cavity and the X2 cavity of the horn relay in the Junction Block.

(a) If the horn sounds, replace the horn relay.

(b) If the horn does not sound, go to Step 4.

(4) Remove airbag/horn pad from steering wheel. (Refer to 8 - ELECTRICAL/RESTRAINTS/DRIVER AIRBAG - REMOVAL).

(5) Test continuity across horn switch connectors with horn switch depressed.

(a) If continuity is detected, repair open circuit between the relay and the horn switch.

(b) If NO continuity, replace airbag cover.

(6) Install horn relay into Junction Block.

(7) Disconnect the wire connector from horn.

(8) Using a voltmeter, with the horn switch depressed test voltage across horn connector terminals of the wire harness.

(a) If voltage is detected, replace horn.

(b) If NO voltage, go to Step 9.

(9) With the horn switch depressed, test for voltage between the X2 circuit and ground.

(a) If voltage OK, repair system ground at right cowl area.

(b) If NO voltage, repair open X2 circuit between the relay and the horns.

REMOVAL

(1) Disconnect and isolate the battery negative cable.

(2) Remove right side headlamp unit. (Refer to 8 - ELECTRICAL/LAMPS/LIGHTING - EXTERIOR/ HEADLAMP UNIT - REMOVAL).

(3) Remove horn mounting bolt.

(4) Disconnect wire harness connector.

INSTALLATION

(1) Connect wire harness connector.

(2) Install horn mounting bolt.

(3) Install right side headlamp unit. (Refer to 8 - ELECTRICAL/LAMPS/LIGHTING - EXTERIOR/ HEADLAMP UNIT - INSTALLATION).

(4) Connect battery negative cable.

HORN RELAY

DESCRIPTION

The horn relay is a International Standards Organization (ISO) micro-relay. The terminal designations and functions are the same as a conventional ISO relay. However, the micro-relay terminal orientation (or footprint) is different, current capacity is lower, and the relay case dimensions are smaller than on the conventional ISO relay.

OPERATION

The horn relay is a electromechanical device that switches current to the horn when the Driver Airbag Module is depressed.

The horn relay is located in the Junction Block. Refer to the Junction Block label for horn relay identification and location.

If a problem is encountered with a continuously sounding horn, it can usually be quickly resolved by removing the horn relay from the Junction Block until further diagnosis is completed. The horn relay cannot be repaired and, if faulty, it must be replaced.

DIAGNOSIS AND TESTING - HORN RELAY

Refer to the appropriate wiring information. The wiring information includes wiring diagrams, proper wire and connector repair procedures, details of wire harness routing and retention, connector pin-out information and location views for the various wire harness connectors, splices and grounds.

(1) Remove horn relay from the Junction Block.

(2) Using ohmmeter, test between the Junction Block relay terminal 7 and ground for continuity.

(a) When the horn contact is not depressed, no continuity.

(b) Continuity to ground when horn contact is depressed.

(c) If continuity is not correct, repair horn contact or wiring as necessary.

(3) Insert a jumper wire between terminals 8 and 10 of the horn relay in the Junction Block.

(a) If horn sounds replace relay.

(b) If the horn does not sound, install horn relay (Refer to 8 - ELECTRICAL/HORN/HORN - DIAGNOSIS AND TESTING).

(4) Using voltmeter, test battery voltage:

(a) Test Junction Block horn relay terminals 6 and 8 for voltage from fuse 8.

(b) If not OK, repair as necessary.

HORN SWITCH

DESCRIPTION

The horn switch is molded into the airbag trim cover. The horn switch can not be serviced separately. (Refer to 8 - ELECTRICAL/RESTRAINTS/DRIVER AIRBAG - REMOVAL) for service procedures.

IGNITION CONTROL

TABLE OF CONTENTS

page

IGNITION CONTROL
DESCRIPTION - IGNITION SYSTEM 1
OPERATION - IGNITION SYSTEM 1
SPECIFICATIONS
TORQUE 2
SPARK PLUG CABLE RESISTANCE 2
SPARK PLUG 2
AUTO SHUT DOWN RELAY
DESCRIPTION 2
OPERATION 2
CAMSHAFT POSITION SENSOR
DESCRIPTION 3
OPERATION 3
REMOVAL
REMOVAL - 4 CYLINDER 3
REMOVAL - 2.7L 4
INSTALLATION
INSTALLATION - 4 CYLINDER 4
INSTALLATION - 2.7L 4
IGNITION COIL
DESCRIPTION 4
OPERATION 4
REMOVAL
REMOVAL - 4 Cylinder 5
REMOVAL - 2.7L 5
INSTALLATION
INSTALLATION - 4 CYLINDER 5
INSTALLATION - 2.7L 5
IGNITION COIL CAPACITOR
DESCRIPTION 6
REMOVAL 6
INSTALLATION 6
KNOCK SENSOR
DESCRIPTION 6
OPERATION 6
REMOVAL
REMOVAL - 4 CYLINDER 7
REMOVAL - 2.7L 7
INSTALLATION
INSTALLATION - 4 CYLINDER 7
INSTALLATION - 2.7L 7
SPARK PLUG
DESCRIPTION
DESCRIPTION - STANDARD 4 CYLINDER . . . 7
DESCRIPTION - PLATINUM PLUGS 8
SPARK PLUG CABLE
DESCRIPTION 8
REMOVAL - 2.0/2.4L 8
INSTALLATION - 2.0/2.4L 8

IGNITION CONTROL

DESCRIPTION - IGNITION SYSTEM

NOTE: All engines use a fixed ignition timing system. Basic ignition timing is not adjustable. All spark advance is determined by the Powertrain Control Module (PCM).

The distributorless ignition system used on these engines is referred to as the Direct Ignition System (DIS). The system's three main components are the coils, crankshaft position sensor, and camshaft position sensor. If equipped with the coil on plug ignition system it utilizes an ignition coil for every cylinder, it is mounted directly over the each spark plug.

OPERATION - IGNITION SYSTEM

The crankshaft position sensor and camshaft position sensor are hall effect devices. The camshaft position sensor and crankshaft position sensor generate pulses that are inputs to the PCM. The PCM determines engine position from these sensors. The PCM calculates injector sequence and ignition timing from crankshaft & camshaft position. For a description of both sensors, refer to Camshaft Position Sensor and Crankshaft Position Sensor.

IGNITION CONTROL (Continued)

SPECIFICATIONS

TORQUE

DESCRIPTION	N·m	Ft. Lbs.	In. Lbs.
2.0/2.4L Target Magnet Screw	3		30
2.4L Camshaft Sensor Screw	12.9		115
2.0L Camshaft Sensor Screw	9		80
2.7L Camshaft Sensor Screw	12		105
2.0/2.4L Ignition coil bolts	11.9		105
2.7L Ignition coil bolts	6.2		55
2.4L Spark Plugs *(Torque Critical)	17.6 ±2	13 ±2	
2.7L Spark Plugs	17.6	13	
Knock Sensor	10	7	
Ignition Coil Capacitor Nut	12	8.8	106
* Tapered seat plugs. Imperative that torque is NOT EXCEEDED.			

SPARK PLUG CABLE RESISTANCE

2.0/2.4L

CABLE	Maximum Resistance
1, 2, 3, & 4	10.8K ohms

SPARK PLUG

Engine	Spark Plug	Gap	Thread Size
2.0/2.4L	RE14MCC5	0.048 TO 0.053	14mm (1 in.) reach

Engine	Spark Plug	Gap	Thread Size
2.7L	RE10PMC5	0.048 TO 0.053	14mm (1 in.) reach

AUTO SHUT DOWN RELAY

DESCRIPTION

The relay is located in the Power Distribution Center (PDC). For the location of the relay within the PDC, refer to the PDC cover for location. Check electrical terminals for corrosion and repair as necessary

OPERATION

The ASD sense circuit (SBEC vehicles) or the engine switched battery (NGC vehicles) informs the PCM when the ASD relay energizes. A 12 volt signal at this input indicates to the PCM that the ASD has been activated. This input is also used to power certain drivers on NGC vehicles.

When energized, the ASD relay on SBEC vehicles supplies battery voltage to the fuel injectors, ignition coils and the heating element in each oxygen sensor.

When energized, the ASD relay on NGC vehicles provides power to operate the injectors, ignition coil, generator field, O2 sensor heaters (both upstream and downstream), evaporative purge solenoid, EGR

AUTO SHUT DOWN RELAY (Continued)

solenoid (if equipped) wastegate solenoid (if equipped), and NVLD solenoid (if equipped).

For both SBEC and NGC vehicles, the ASD relay also provides a sense circuit to the PCM for diagnostic purposes. If the PCM does not receive 12 volts from this input after grounding the control side of the ASD relay, it sets a Diagnostic Trouble Code (DTC). The PCM energizes the ASD any time there is an engine speed that exceeds a predetermined value (typically about 50 rpm). The ASD relay can also be energized after the engine has been turned off to perform an O2 sensor heater test, if vehicle is equipped with OBD II diagnostics.

As mentioned earlier, the PCM energizes the ASD relay during an O2 sensor heater test. This test is performed only after the engine has been shut off for SBEC vehicles. On NGC vehicles it checks the O2 heater upon vehicle start. The PCM still operates internally to perform several checks, including monitoring the O2 sensor heaters.

CAMSHAFT POSITION SENSOR

DESCRIPTION

The camshaft position sensor for the 4 cylinder engine is mounted on the end of the cylinder head (Fig. 1) or the front of the cylinder head on 2.7L (Fig. 3).

OPERATION

The CMP sensor contains a hall effect device that provide cylinder identification to the Powertrain Control Module (PCM). The sensor generates pulses as groups of notches on the camshaft sprocket or camshaft target magnet pass underneath it. The PCM keeps track of crankshaft rotation and identifies each cylinder by the pulses generated by the notches on the camshaft sprocket.

When metal aligns with the sensor, voltage goes low (less than 0.3 volts). When a notch aligns with the sensor, voltage spikes high (5.0 volts). As a group of notches pass under the sensor, the voltage switches from low (metal) to high (notch) then back to low. The number of notches determine the amount of pulses. If available, an oscilloscope or DRBIII® PEP Module can display the square wave patterns of each timing event.

REMOVAL

REMOVAL - 4 CYLINDER

The camshaft position sensor is mounted to the rear of the cylinder head.

(1) Remove the negative battery cable.

(2) Disconnect the PCV hose and reposition.

(3) Disconnect electrical connectors from the camshaft position sensor (Fig. 1).

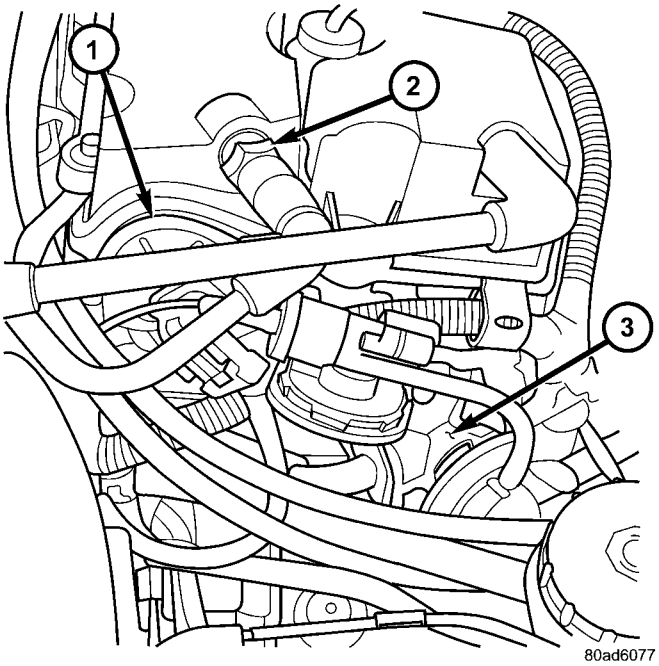

Fig. 1 CAM SENSOR/EGR VALVE/PCV VALVE

1 - Camshaft Position Sensor
2 - PCV Valve
3 - EGR Valve and Transducer (if equipped)

(4) Remove camshaft position sensor mounting screws. Remove sensor.

(5) Loosen screw attaching target magnet to rear of camshaft and remove magnet (Fig. 2).

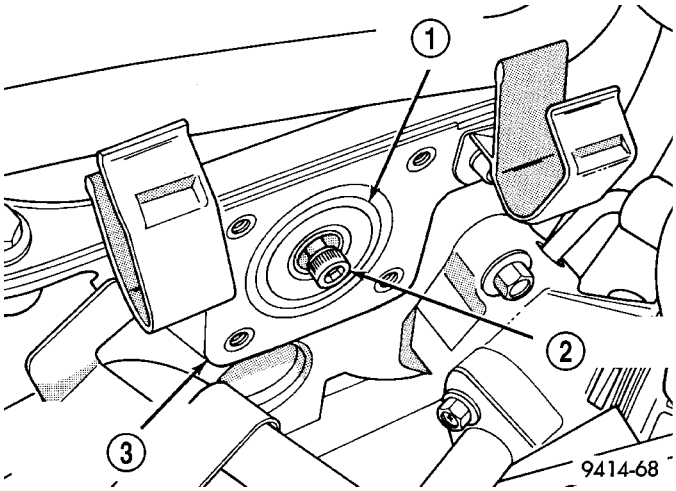

Fig. 2 Target Magnet Removal/Installation

1 - TARGET MAGNET
2 - MOUNTING BOLT
3 - REAR OF CYLINDER HEAD

CAMSHAFT POSITION SENSOR (Continued)

REMOVAL - 2.7L

The camshaft position sensor is mounted in the front of the head.

(1) Disconnect electrical connector from sensor.

(2) Remove camshaft position sensor screw.

(3) Without pulling on the connector, pull the sensor out of the chain case cover (Fig. 3).

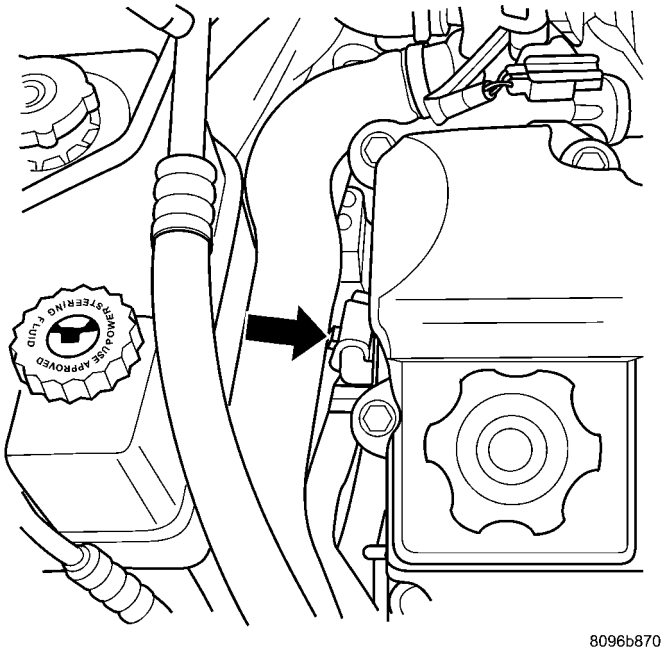

Fig. 3 CAM SENSOR LOCATION 2.7L

INSTALLATION

INSTALLATION - 4 CYLINDER

The target magnet has locating dowels that fit into machined locating holes in the end of the camshaft (Fig. 4).

(1) Install target magnet in end of camshaft. Tighten mounting screw to 3 N·m (30 in. lbs.) torque. Over torqueing could cause cracks in magnet. If magnet cracks replace it.

(2) Install camshaft position sensor. Tighten sensor mounting screws to 12.9 N·m (115 in. lbs.) torque.

(3) Carefully attach electrical connector to camshaft position sensor. Installation at an angle may damage the sensor pins.

(4) Connect the PCV Valve hose.

(5) Connect the negative battery cable.

INSTALLATION - 2.7L

The camshaft position sensor is mounted in the front of the head.

(1) Install sensor in the chain case cover and push sensor in until contact is made with the boss on the head. While holding the sensor in this position,

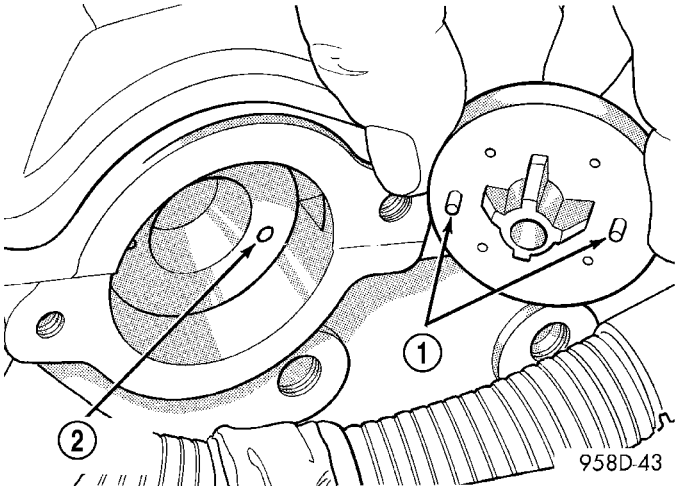

Fig. 4 Target Magnet Installation

1 - LOCATING DOWELS
2 - LOCATING HOLES (2)

install and tighten the retaining bolt to 12 N·m (105 in. lbs.) torque.

(2) Attach electrical connector to sensor.

IGNITION COIL

DESCRIPTION

The ignition coil assembly for the 4 cylinder engines consists of 2 independent coils molded together. The coil assembly for the 4 cylinder engines is mounted on the cylinder head cover. Spark plug cables route to each cylinder from the coil. The coil assemblies for the 2.7L are mounted on the head cover. It is a coil on plug assembly and each cylinder has an ignition coil assembly.

OPERATION

The coil for the 4 cylinder engines fires two spark plugs every power stroke. One plug is the cylinder under compression, the other cylinder fires on the exhaust stroke. The Powertrain Control Module (PCM) determines which of the coils to charge and fire at the correct time.

The Auto Shutdown (ASD) relay provides battery voltage to the ignition coil. The PCM provides a ground contact (circuit) for energizing the ignition coil. When the PCM breaks the contact, the magnetic energy in the coil transfers to the secondary causing the spark. The PCM will de-energize the ASD relay if it does not receive the crankshaft position sensor and camshaft position sensor inputs. Refer to Auto Shutdown (ASD) Relay—PCM Output, in this section for relay operation.

IGNITION COIL (Continued)

REMOVAL

REMOVAL - 4 Cylinder

The electronic ignition coil pack attaches directly to the valve cover (Fig. 5).

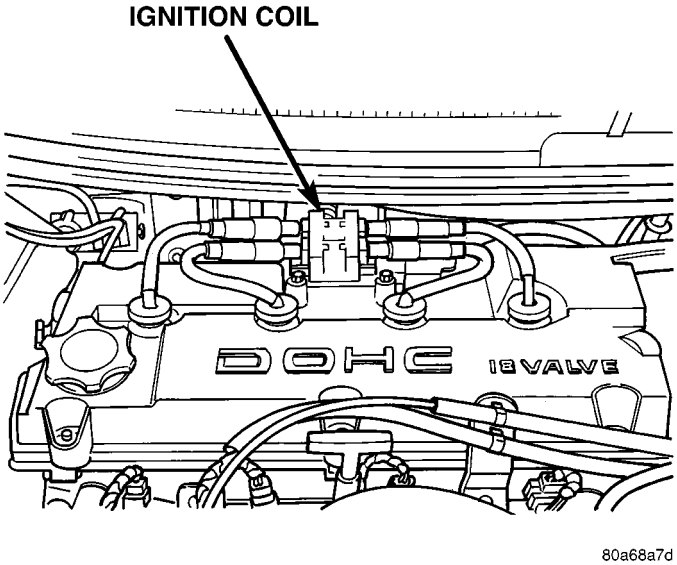

Fig. 5 IGNITION COIL 4 CYLINDER

(1) Diconnect the negative battery cable.

(2) Disconnect electrical connector from coil pack (Fig. 6).

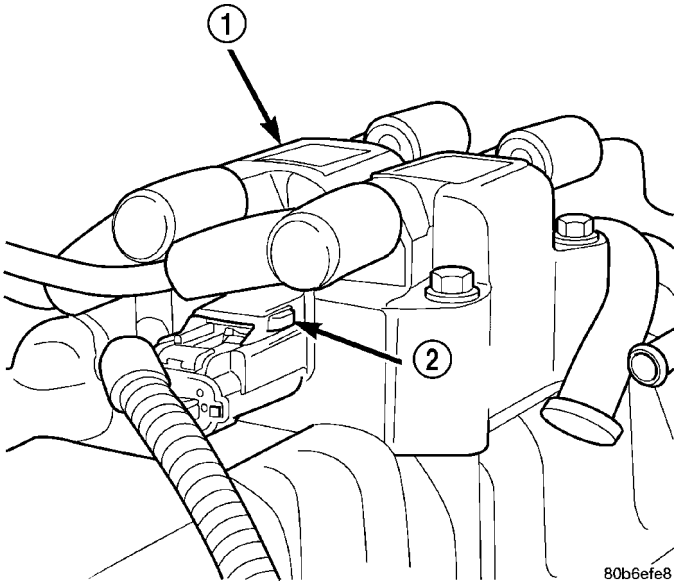

Fig. 6 Ignition Coil Connector

1 - COIL
2 - LOCKING TAB

(3) Remove spark plug cables, twist and pull cables to remove.

(4) Remove coil pack mounting bolts.

(5) Remove coil pack.

REMOVAL - 2.7L

(1) Prior to removing the ignition coils, spray compressed air around the coil area and spark plug (Fig. 7).

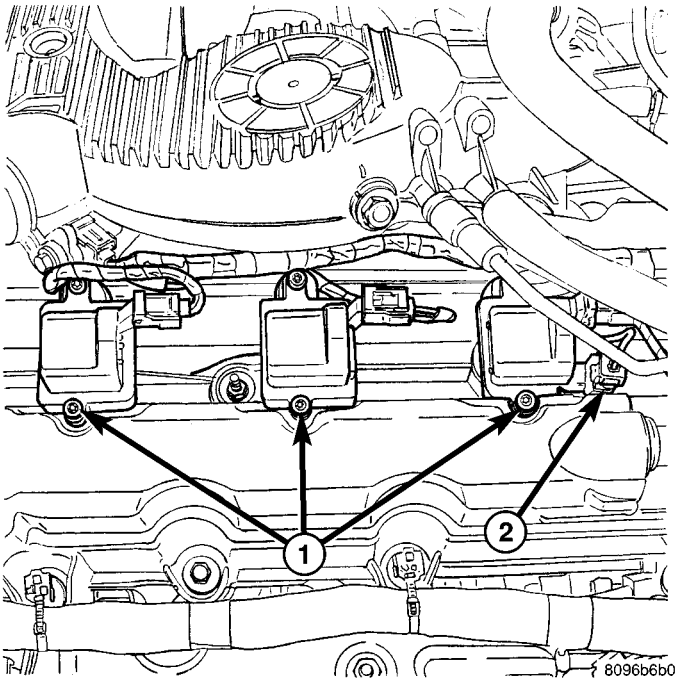

Fig. 7 IGNITION COILS, COIL CAPACITOR

1 - Ignition Coils
2 - Ignition Capacitor

(2) Remove electrical connector from ignition coil.

(3) Remove 2 fasteners from ignition coil assembly.

(4) Remove ignition coil assembly (Fig. 8).

INSTALLATION

INSTALLATION - 4 CYLINDER

The electronic ignition coil pack attaches directly to the valve cover (Fig. 5).

(1) Install coil pack on valve cover.

(2) Install bolts and tighten bolts to N·m 11.8 (105 in. lbs.).

(3) Connect the electrical connector (Fig. 6).

(4) Transfer spark plug cables to new coil pack. The coil pack towers are numbered with the cylinder identification. Be sure the ignition cables snap onto the towers.

INSTALLATION - 2.7L

(1) Install ignition coil assembly for spark plug (Fig. 8).

(2) Install coil screws and tighten to 6.2 N·m (55 in. lbs.).

IGNITION COIL (Continued)

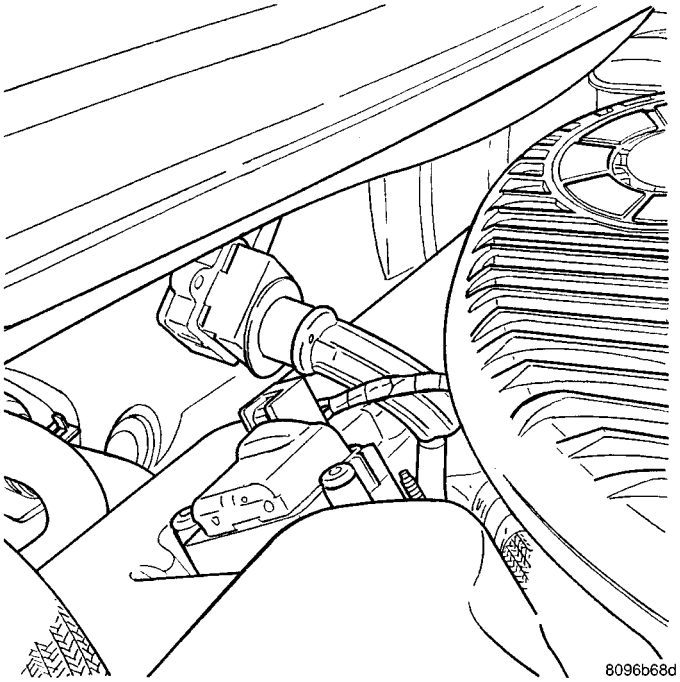

Fig. 8 IGNITION COIL REMOVAL

(3) Connect the electrical connector.

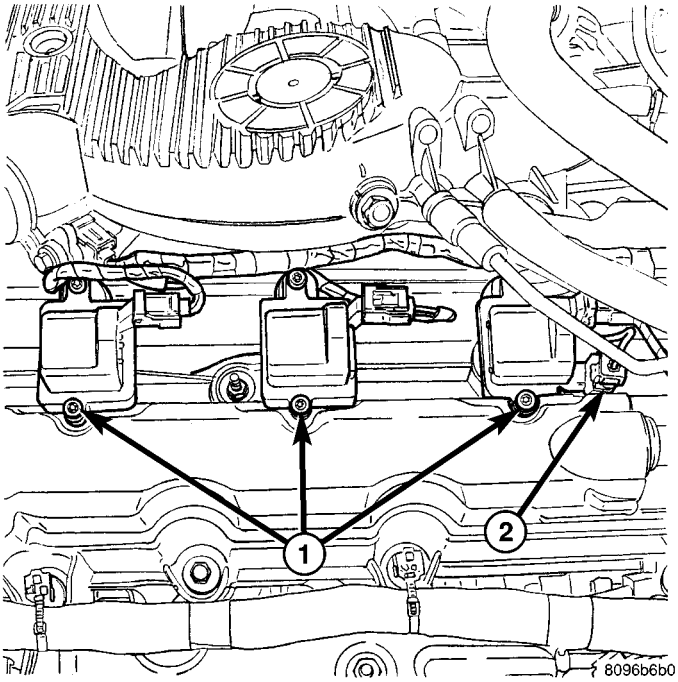

Fig. 9 Ignition Coil Capacitor

1 - Ignition Coils
2 - Ignition Capacitor

IGNITION COIL CAPACITOR

DESCRIPTION

There is a coil capacitor added to each bank of cylinders for radio noise suppression.

REMOVAL

(1) Remove the negative battery cable.
(2) Disconnect the electrical connector (Fig. 9).
(3) Remove nut and capacitor.

INSTALLATION

(1) Install capacitor and tighten nut (Fig. 9).
(2) Attach electrical connector to capacitor.
(3) Install the negative battery cable.

KNOCK SENSOR

DESCRIPTION

The knock sensor threads into the cylinder block. The knock sensor is designed to detect engine vibration that is caused by detonation.

OPERATION

When the knock sensor detects a knock in one of the cylinders, it sends an input signal to the PCM. In response, the PCM retards ignition timing for all cylinders by a scheduled amount.

Knock sensors contain a piezoelectric material which constantly vibrates and sends an input voltage (signal) to the PCM while the engine operates. As the intensity of the crystal's vibration increases, the knock sensor output voltage also increases.

The voltage signal produced by the knock sensor increases with the amplitude of vibration. The PCM receives as an input the knock sensor voltage signal. If the signal rises above a predetermined level, the PCM will store that value in memory and retard ignition timing to reduce engine knock. If the knock sensor voltage exceeds a preset value, the PCM retards ignition timing for all cylinders. It is not a selective cylinder retard.

The PCM ignores knock sensor input during engine idle conditions. Once the engine speed exceeds a specified value, knock retard is allowed.

Knock retard uses its own short term and long term memory program.

Long term memory stores previous detonation information in its battery-backed RAM. The maximum authority that long term memory has over timing retard can be calibrated.

Short term memory is allowed to retard timing up to a preset amount under all operating conditions (as long as rpm is above the minimum rpm) except WOT. The PCM, using short term memory, can respond quickly to retard timing when engine knock is detected. Short term memory is lost any time the ignition key is turned off.

KNOCK SENSOR (Continued)

NOTE: Over or under tightening affects knock sensor performance, possibly causing improper spark control.

REMOVAL

REMOVAL - 4 CYLINDER

The knock sensor threads into the side of the cylinder block (Fig. 10).

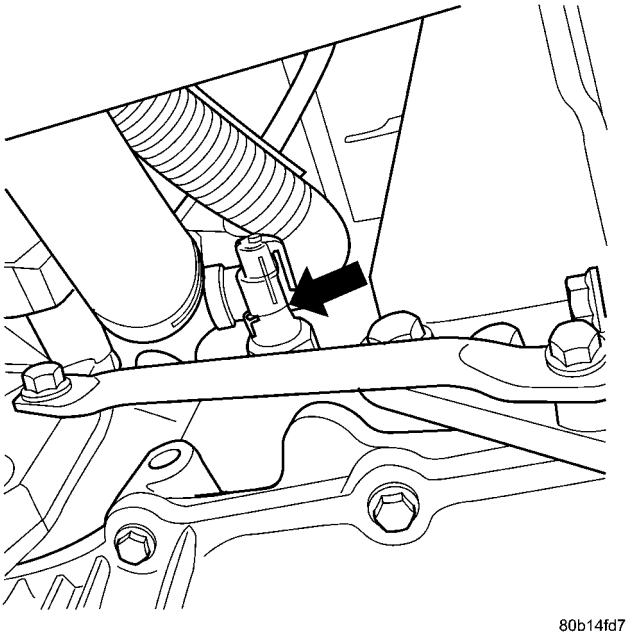

Fig. 10 KNOCK SENSOR - 4 CYLINDER

(1) Disconnect electrical connector from knock sensor.

(2) Use a crow foot socket to remove the knock sensors.

REMOVAL - 2.7L

The sensors screws into the cylinder block, directly below the intake manifold.

(1) Remove intake manifold plenum refer to the Engine section.

(2) Remove the passenger side cylinder head, refer to the Engine section.

(3) Disconnect electrical connector from knock sensor (Fig. 11).

(4) Use a crows foot socket to remove the knock sensors.

INSTALLATION

INSTALLATION - 4 CYLINDER

The knock sensor threads into the side of the cylinder block in front of the starter (Fig. 10).

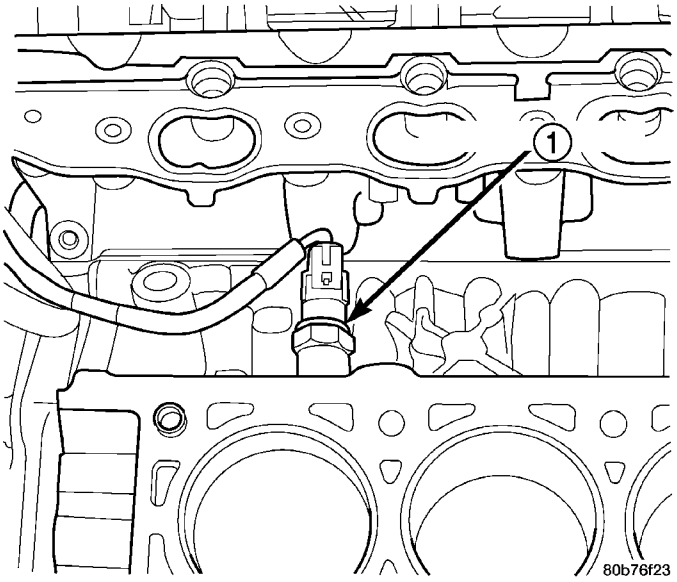

Fig. 11 KNOCK SENSOR 2.7 L

1 - KNOCK SENSOR

(1) Install knock sensor. Tighten knock sensor to 10 N·m (7 ft. lbs.) torque. **Over or under tightening effects knock sensor performance, possibly causing improper spark control.**

(2) Attach electrical connector to knock sensor.

INSTALLATION - 2.7L

The sensors screws into the cylinder block, directly below the intake manifold.

(1) Install knock sensor (Fig. 11). Tighten knock sensor to 10 N·m (7 ft. lbs.) torque. **Over or under tightening effects knock sensor performance resulting in possible improper spark control.**

(2) Install the passenger side cylinder head, refer to the Engine section.

(3) Attach electrical connector to knock sensor.

(4) Install intake manifold plenum. Refer to the Engine section.

SPARK PLUG

DESCRIPTION

DESCRIPTION - STANDARD 4 CYLINDER

All engines use resistor spark plugs. They have resistance values ranging from 6,000 to 20,000 ohms when checked with at least a 1000 volt spark plug tester.

Do not use an ohm meter to check the resistance of the spark plugs. This will give an inaccurate reading.

Refer to the Specifications section for gap and type of spark plug.

SPARK PLUG (Continued)

DESCRIPTION - PLATINUM PLUGS

The V6 engines use platinum resistor spark plugs. They have resistance values of 6,000 to 20,000 ohms when checked with at least a 1000 volt tester. For spark plug identification and specifications, Refer to the Specifications section.

Do not use an ohm meter to check the resistance of the spark plugs. This will give an inaccurate reading.

When the spark plugs use a single or double platinum tips and they have a recommended service life of 100,000 miles for normal driving conditions per schedule A in this manual. The spark plugs have a recommended service life of 75,000 miles for severe driving conditions per schedule B in this manual. A thin platinum pad is welded to both or just the center electrode end(s) as shown in (Fig. 12). Extreme care must be used to prevent spark plug cross threading, mis-gapping (Fig. 13) and ceramic insulator damage during plug removal and installation.

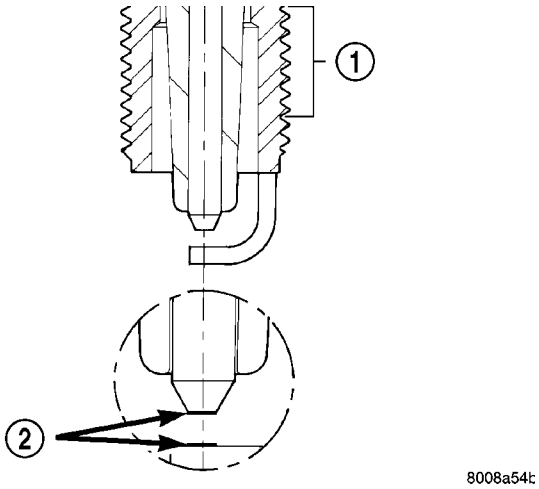

Fig. 12 Platinum Pads

1 - APPLY ANTI-SEIZE COMPOUND HERE ONLY
2 - PLATINUM SPARK SURFACE

CAUTION: Cleaning of the platinum plug may damage the platinum tip.

SPARK PLUG CABLE

DESCRIPTION

Spark Plug cables are sometimes referred to as secondary ignition wires. The wires transfer electrical current from the ignition coil pack to individual spark plugs at each cylinder. The resistive spark plug cables are of nonmetallic construction. The cables provide suppression of radio frequency emissions from the ignition system.

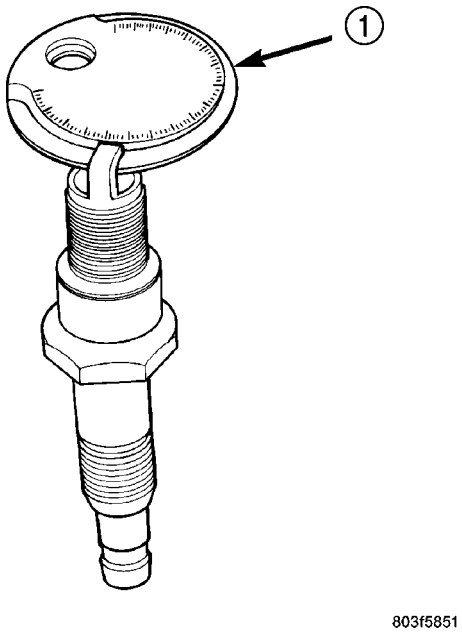

Fig. 13 Setting Spark Plug Electrode Gap

1 - TAPER GAUGE

Check the spark plug cable connections for good contact at the coil, and spark plugs. Terminals should be fully seated. The insulators should be in good condition and should fit tightly on the coil, and spark plugs. Spark plug cables with insulators that are cracked or torn must be replaced.

Clean Spark Plug cables with a cloth moistened with a non-flammable solvent. Wipe the cables dry. Check for brittle or cracked insulation. The spark plug cables and spark plug boots are made from high temperature materials.

REMOVAL - 2.0/2.4L

Failure to route the cables properly could cause the radio to reproduce ignition noise, cross ignition of the spark plugs or short circuit the cables to ground.

Remove spark plug cable from coil first.

Always remove the spark plug cable by grasping the top of the spark plug insulator, turning the boot 1/2 turn and pulling straight up in a steady motion.

INSTALLATION - 2.0/2.4L

Failure to route the cables properly could cause the radio to reproduce ignition noise, cross ignition of the spark plugs or short circuit the cables to ground. Install spark plug insulators over spark plugs. Ensure the top of the spark plug insulator covers the upper end of the spark plug tube, then connect the other end to coil pack.

INSTRUMENT CLUSTER

TABLE OF CONTENTS

page

INSTRUMENT CLUSTER
DESCRIPTION 1
OPERATION 1
DIAGNOSIS AND TESTING - INSTRUMENT CLUSTER 1
REMOVAL 2
INSTALLATION 2

page

INSTRUMENT CLUSTER MASK/LENS
REMOVAL 2
INSTALLATION 2
VACUUM FLUORESCENT DISPLAY
REMOVAL 3
INSTALLATION 3

INSTRUMENT CLUSTER

DESCRIPTION

The mechanical instrument cluster is an electro-mechanical module which receives most of its information directly from the various control modules, via the PCI data bus.

The cluster includes:

- Speedometer
- Tachometer
- Vacuum Fluorescent Display (VF) odometer/trip odometer and transmission range indicator with automatic transmission
- Fuel gauge
- Temperature gauge

The warning and information indicators include the following:

- Check Engine
- Airbag
- Charging system
- Low oil pressure
- High temperature
- Low fuel
- Seat belt
- Cruise (optional)
- Brake/park brake
- Anti-lock brake system (optional)
- High beam
- Front and Rear Fog lamps (optional)
- Vehicle Theft Security System alarm LED indicator (optional)
- Turn signals
- Traction Control (Optional)

VF display warnings:

- Door
- Deck

OPERATION

The gauges are the magnetic air-core type. Pointers should rest at or below the low graduation.

It receives its information from the Body Control Module (BCM), Powertrain Control Module (PCM), Transmission Control Module (TCM), Controller Anti-Lock Brakes (CAB), and Occupant Restraint Controller (ORC), via the PCI data bus. Upon receipt of information, the cluster will determine the gauge position and whether the PCI bus controlled warnings should be turned ON or OFF.

- The **ABS** is a learned feature by receiving an ABS message on the bus. Once learned, the ABS must be unlearned manually by sending a diagnostic message using a DRB III® scan tool.
- The **AIRBAG** light is always supported, but can be unlearned automatically by using the VIN information and the non-receipt of AIRBAG messages. Receipt of AIRBAG messages will override non-airbag VIN information.
- The cluster provides the **Auto-Stick (A/S)** or **Non Auto-Stick** information via the PCI bus. The TCM will learn A/S or non A/S vehicle configuration per cluster information on the bus.
- The cluster is set to support vehicles equipped with a TCM (automatic transmission). In MTX (manual transmission) vehicles, the cluster will turn OFF gear information upon receipt of vehicle configuration from the PCM. At initial power-up, you might be able to potentially see the ATX gear letters. Once the MTX information is received, the gear letters will be turned off.

DIAGNOSIS AND TESTING - INSTRUMENT CLUSTER

As a quick diagnosis, the cluster will perform a functional check of the odometer display, transmission range display and warning indicators after the ignition is switched to RUN/START. If the cluster is not receiving any PCI bus messages, the cluster will appear non functional and “no bus” will appear in the odometer display.

INSTRUMENT CLUSTER (Continued)

A self-test of the cluster can also be initiated by pressing and holding the odometer reset button and switching the ignition from lock to unlock. The cluster will then step through several displays for functional verification. By pressing the trip odometer reset button while going through the self-test, you can temporarily freeze the test. Pressing the bottom again will continue sequence. The cluster will store bus communication faults with other modules. It will also store faults for the AIRBAG and ABS lamps. During the self-diagnostics, the AIRBAG and ABS lamps are tested.

If the cluster is not functioning properly, refer to the proper Body Diagnostic Procedures manual.

If the cluster is not receiving PCI bus messages, refer to the pre-diagnostic test described in Body Diagnostic Procedures manual.

In order to diagnose the instrument cluster functions, a DRB lll® scan tool and the proper Body Diagnostic Procedures Manual are required.

If the diagnostic procedure determines that a replacement of an instrument cluster component is required, refer to Electrical, Instrument Cluster, Removal, and Installation.

REMOVAL

(1) Disconnect and isolate the battery negative remote cable.

(2) Remove left end cover.

(3) Using a trim stick (special tool #C-4755) or equivalent, gently pry up on the power mirror switch. Disconnect the switch and remove.

(4) Using a trim stick or equivalent, gently pry up on instrument panel center trim bezel.

(5) Disconnect the HVAC control connector.

Remove the one screw to the inboard passenger trim bezel on the right of the steering column and remove by unsnapping clips.

(6) Remove the one screw from the passenger side trim bezel and remove trim by unsnapping clips.

(7) Remove 4 screws to left lower instrument panel trim.

(8) Remove the four screws to the cluster bezel. Using a trim stick or equivalent, gently pry out the cluster bezel.

(9) If the vehicle is equipped with a Compass Mini-Trip Computer (CMTC/Traveler), disconnect the module and then remove the cluster bezel assembly.

(10) For better access and prevention of scratching the cluster lens, tilt the steering column to its lowest position and depress the hazard switch.

(11) Remove the cluster attaching screws.

(12) Pull the cluster rearward to disconnect the 26–way self docking connector and then carefully tilt cluster downward slightly and slide cluster sideways to remove cluster assembly.

NOTE: When replacing a cluster, the original optional bulbs (ABS, rear fog, front fog, traction control, and security LED) must be transferred to the new cluster if so equipped.

INSTALLATION

(1) Carefully slide the cluster into its location and push the cluster forward to connect it to the mating half of its mating connector on the instrument panel.

(2) Install the four cluster attaching screws.

(3) Position the cluster bezel and if so equipped, connect the traveler connector, then snap the cluster bezel into position.

(4) Install the five screws to the cluster bezel.

(5) Install the four screws to the left lower instrument panel trim.

(6) Connect the mirror switch connector and firmly snap it into place.

(7) Install the one screw to the trim bezel to the right side of the steering column.

(8) Firmly snap into place and then install one screw to the passenger side trim bezel.

(9) Connect the HVAC control connectors.

(10) Position the center bezel over the retaining slots and firmly snap instrument panel center bezel into place.

(11) Install the left end cover.

(12) Connect the battery negative cable.

INSTRUMENT CLUSTER MASK/LENS

REMOVAL

(1) Remove instrument cluster from vehicle. Refer to Electrical, Instrument Cluster, Removal.

(2) Remove six screws to mask/lens.

(3) Separate mask/lens from instrument cluster and remove.

INSTALLATION

(1) Align mask/lens with instrument cluster dial assembly and housing and install the six retaining screws.

(2) Install the instrument cluster into vehicle. Refer to Electrical, Instrument Cluster, Installation.

(3) Connect the negative battery cable remote terminal to the remote battery post.

VACUUM FLUORESCENT DISPLAY

REMOVAL

(1) Open hood and disconnect the negative battery cable remote terminal from the remote battery post.

(2) Remove instrument cluster from vehicle. Refer to Electrical, Instrument Cluster, Removal.

(3) Remove six cluster back cover retaining screws and remove the cover.

(4) Carefully unplug the connector from printed circuit board.

(5) Remove six attachment screws and then remove cluster mask/lens from the instrument cluster.

(6) Carefully pull the dial assembly from the housing to separate connection with the PC-board.

(7) Remove two screws from the back of the dial assembly to remove the VF-display.

(8) Remove the VF-display from the cluster.

INSTALLATION

(1) Position the VF-display onto the dial assembly and install the two screws.

(2) Carefully push the dial assembly into the housing to make the connection with the PC-board.

(3) Install the six attachment screws and then install cluster mask/lens to the instrument cluster.

(4) Carefully plug the connector into the printed circuit board.

(5) Install the cover and the six cluster back cover retaining screws.

(6) Install the instrument cluster into vehicle. Refer to Electrical, Instrument Cluster, Installation.

(7) Connect the negative battery cable remote terminal to the remote battery post.

LAMPS

TABLE OF CONTENTS

page

LAMPS/LIGHTING - EXTERIOR 1

LAMPS/LIGHTING - INTERIOR 27

LAMPS/LIGHTING - EXTERIOR

TABLE OF CONTENTS

page

LAMPS/LIGHTING - EXTERIOR
DESCRIPTION 2
OPERATION 3
DIAGNOSIS AND TESTING - LAMPS/ LIGHTING - EXTERIOR 3
SPECIFICATIONS
EXTERIOR LAMPS 6
BRAKE LAMP SWITCH
DESCRIPTION 6
OPERATION 6
DIAGNOSIS AND TESTING - BRAKE LAMP SWITCH 6
REMOVAL 7
INSTALLATION 7
ADJUSTMENTS
ADJUSTMENT - BRAKE LAMP SWITCH 8
CENTER HIGH MOUNTED STOP LAMP
REMOVAL 8
INSTALLATION 8
CENTER HIGH MOUNTED STOP LAMP UNIT
REMOVAL 8
INSTALLATION 9
CENTER HIGH MOUNTED STOP LAMP UNIT - JR27 ONLY
REMOVAL 9
INSTALLATION 9
COMBINATION FLASHER
DESCRIPTION 9
OPERATION 9
DIAGNOSIS AND TESTING - COMBINATION FLASHER 10
REMOVAL 11
INSTALLATION 11
FOG LAMP
REMOVAL 11
INSTALLATION 11

page

FOG LAMP UNIT
STANDARD PROCEDURE
STANDARD PROCEDURE - FOG LAMP UNIT ALIGNMENT 12
STANDARD PROCEDURE - FOG LAMP UNIT ALIGNMENT - EXPORT 12
REMOVAL 12
INSTALLATION 13
FRONT POSITION LAMP - EXPORT
REMOVAL 13
INSTALLATION 14
HAZARD WARNING SWITCH
DESCRIPTION 14
OPERATION 14
HEADLAMP
REMOVAL 15
INSTALLATION 15
HEADLAMP - EXPORT
REMOVAL 15
INSTALLATION 15
HEADLAMP LEVELING MOTOR - EXPORT
DIAGNOSIS AND TESTING - HEADLAMP LEVELING MOTOR - EXPORT 16
REMOVAL 16
INSTALLATION 16
HEADLAMP LEVELING SWITCH
DIAGNOSIS AND TESTING - HEADLAMP LEVELING SWITCH - EXPORT 16
REMOVAL 17
INSTALLATION 17
HEADLAMP UNIT
STANDARD PROCEDURE - HEADLAMP UNIT ALIGNMENT 17
REMOVAL 18
INSTALLATION 18

HEADLAMP UNIT - EXPORT
STANDARD PROCEDURE - HEADLAMP UNIT ALIGNMENT - EXPORT 18
REMOVAL 19
INSTALLATION 20
LICENSE PLATE LAMP
REMOVAL 20
INSTALLATION 20
LICENSE PLATE LAMP UNIT
REMOVAL 21
INSTALLATION 21
LICENSE PLATE LAMP UNIT - JR27 ONLY
REMOVAL 21
INSTALLATION 21
MULTI-FUNCTION SWITCH
DESCRIPTION 21
OPERATION 21
DIAGNOSIS AND TESTING - MULTI-FUNCTION SWITCH 22
REMOVAL 24
INSTALLATION 24
PARK/TURN SIGNAL LAMP
REMOVAL 24
INSTALLATION 24
REAR FOG LAMP - EXPORT
REMOVAL 24
INSTALLATION 24
REAR FOG LAMP UNIT - EXPORT
REMOVAL 25
INSTALLATION 25
SIDE REPEATER LAMP UNIT - EXPORT
REMOVAL 25
INSTALLATION 25
TAIL LAMP
REMOVAL 26
INSTALLATION 26
TAIL LAMP UNIT
REMOVAL 26
INSTALLATION 26
TRUNK LAMP UNIT
REMOVAL 26
INSTALLATION 26

LAMPS/LIGHTING - EXTERIOR

DESCRIPTION

LAMP SYSTEMS

Lighting circuits are protected by fuses or circuit breakers. Lighting circuits require an overload protected power source, on/off device, lamps and body ground to operate properly. Plastic lamps require a wire in the harness to supply body ground to the lamp socket. If a socket has become corroded, clean socket and bulb base with abrasive fiber sanding pad or metallic bristle brush. Replace sockets and bulbs that are deformed from corrosion that could prevent continuous body ground.

Wire connectors can make intermittent contact or become corroded. Before coupling wire connectors, inspect the terminals inside the connector. Male terminals should not be bent or disengaged from the insulator. Female terminals should not be sprung open or disengaged from the insulator. Bent and sprung terminals can be repaired using needle nose pliers and pick tool. Corroded terminals appear chalky or green. Corroded terminals should be replaced to avoid recurrence of the problem symptoms.

Begin electrical system failure diagnosis by testing related fuses and circuit breakers in the fuse block and engine compartment. Verify that bulbs are in good condition and test continuity of the circuit ground. Refer to the appropriate wiring information. The wiring information includes wiring diagrams, proper wire and connector repair procedures, details of wire harness routing and retention, connector pin-out information and location views for the various wire harness connectors, splices and grounds.

DAYTIME RUNNING LAMP (CANADA ONLY)

JR vehicles built for use in Canada are equipped with a Daytime Running Lamp (DRL) system. The DRL system operates the high beam filaments at a lower intensity when the engine is operating and the exterior lamp switch is in either the OFF or parking lamp ON position and the parking brake is not applied. The DRL system is controlled by the Daytime Running Lamp Module located on the back of the junction block, behind the instrument panel (Fig. 1). The DRL module overrides the headlamp switch when the headlamps are turned OFF. The headlamps operate normally when the headlamps are turned ON. Refer to the appropriate wiring information. The wiring information includes wiring diagrams, proper wire and connector repair procedures, details of wire harness routing and retention, connector pin-out information and location views for the various wire harness connectors, splices and grounds.

HEADLAMP TIME DELAY SYSTEM

The optional Headlamp Time Delay system is controlled by the Body Controller (BC) and a relay located in the junction block. The headlamp time delay system can be activated by turning ON the headlamps when the engine is running, turn OFF the ignition switch, then turn OFF the headlamp switch. The BC will allow the headlamps to remain ON for 90 seconds before they automatically turn off. Refer to the Owner's Manual for more information.

LAMPS/LIGHTING - EXTERIOR (Continued)

OPERATION

DAYTIME RUNNING LAMP (CANADA ONLY)

The DRL system is controlled by the Daytime Running Lamp Module located on the back of the junction block, behind the instrument panel (Fig. 1). The DRL module overrides the headlamp switch when the headlamps are turned OFF. The headlamps operate normally when the headlamps are turned ON. Refer to the appropriate wiring information. The wiring information includes wiring diagrams, proper wire and connector repair procedures, details of wire harness routing and retention, connector pin-out information and location views for the various wire harness connectors, splices and grounds.

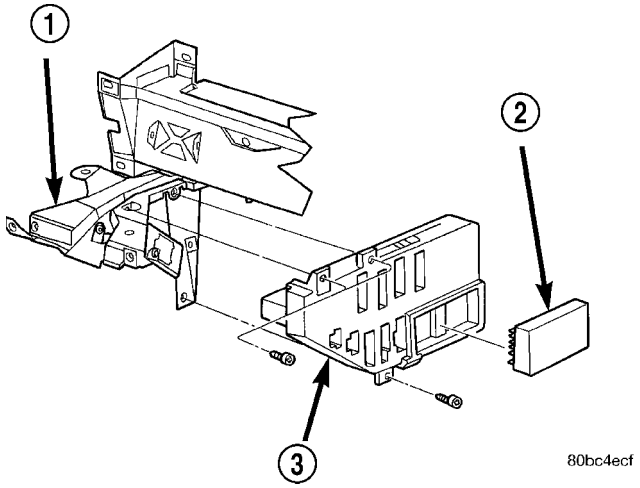

Fig. 1 DAYTIME RUNNING LAMP MODULE LOCATION

1 - FUSE BLOCK BRACKET
2 - DAYTIME RUNNING LAMP MODULE
3 - JUNCTION BLOCK

DIAGNOSIS AND TESTING - LAMPS/LIGHTING - EXTERIOR

WARNING: EYE PROTECTION SHOULD BE USED WHEN SERVICING GLASS COMPONENTS. PERSONAL INJURY CAN RESULT.

CAUTION: Do not touch the glass of halogen bulbs with fingers or other possibly oily surface, reduced bulb life will result. Do not use bulbs other than those indicated in the Bulb Application table. Damage to lamp and/or Daytime Running Lamp Module can result. Do not use fuses, circuit breakers or relays having greater amperage value than indicated on the fuse panel or in the Owners Manual.

When a vehicle experiences problems with the headlamp system, verify the condition of the battery connections, fuses, charging system, headlamp bulbs, wire connectors, relay, high beam switch, dimmer switch, and headlamp switch. Refer to the appropriate wiring information. The wiring information includes wiring diagrams, proper wire and connector repair procedures, details of wire harness routing and retention, connector pin-out information and location views for the various wire harness connectors, splices and grounds.

Each vehicle is equipped with various lamp assemblies. A good ground is necessary for proper lighting operation. Grounding is provided by the lamp socket when it comes in contact with the metal body, or through a separate ground wire.

When changing lamp bulbs check the socket for corrosion. If corrosion is present, clean it with a wire brush.

When it is necessary to remove components to service another, it should not be necessary to apply excessive force or bend a component to remove it. Before damaging a trim component, verify hidden fasteners or captured edges are not holding the component in place.

LAMPS/LIGHTING - EXTERIOR (Continued)

HEADLAMP DIAGNOSIS

CONDITION	POSSIBLE CAUSES	CORRECTION
HEADLAMPS ARE DIM WITH ENGINE IDLING OR IGNITION TURNED OFF.	1. Loose or corroded battery cables.	1. Clean and secure battery cable clamps and posts.
	2. Loose or worn generator drive belt.	2. Adjust or replace generator drive belt.
	3. Charging system output too low.	3. Test and repair charging system, refer to Electrical, Wiring Information.
	4. Battery has insufficient charge.	4. Test battery state-of-charge , refer to Electrical, Wiring Information.
	5. Battery is sulfated or shorted.	5. Load test battery, refer to Electrical, Wiring Information.
	6. Poor lighting circuit Z1-ground.	6. Test for voltage drop across Z1-ground locations, refer to Electrical, Wiring Information.
	7. Both headlamp bulbs defective.	7. Replace both headlamp bulbs.
HEADLAMP BULBS BURN OUT FREQUENTLY.	1. Charging system output too high.	1. Test and repair charging system, refer to Electrical, Wiring Information.
	2. Loose or corroded terminals or splices in circuit.	2. Inspect and repair all connectors and splices, refer to Electrical, Wiring Information.
HEADLAMPS ARE DIM WITH ENGINE RUNNING ABOVE IDLE.	1. Charging system output too low.	1. Test and repair charging system, refer to Electrical, Wiring Information.
	2. Poor lighting circuit Z1-ground.	2. Test for voltage drop across Z1-ground locations, refer to Electrical, Wiring Information.
	3. High resistance in headlamp circuit.	3. Test amperage draw of headlamp circuit.
	4. Both headlamp bulbs defective.	4. Replace both headlamp bulbs.
HEADLAMPS FLASH RANDOMLY.	1. Poor lighting circuit Z1-ground.	1. Test for voltage drop across Z1-ground locations, refer to Electrical, Wiring Information.
	2. High resistance in headlamp circuit.	2. Test amperage draw of headlamp circuit.
	3. Faulty headlamps switch circuit breaker.	3. Replace headlamp switch.
	4. Loose or corroded terminals or splices in circuit.	4. Inspect and repair all connectors and splices, refer to Electrical, Wiring Information.
HEADLAMPS DO NOT ILLUMINATE.	1. No voltage to headlamps.	1. Repair open headlamp circuit, refer to Electrical, Wiring Information.
	2. Fuse is open or missing	2. Replace defective or missing fuse.
	3. No Z1-ground at headlamps.	3. Repair circuit ground, refer to Electrical, Wiring Information.
	4. Faulty headlamp switch.	4. Replace headlamp switch.
	5. Faulty headlamp dimmer (multi-function) switch.	5. Replace multi-function switch.
	6. Broken connector terminal or wire splice in headlamp circuit.	6. Repair connector terminal or wire splice.

LAMPS/LIGHTING - EXTERIOR (Continued)

FOG LAMP DIAGNOSIS

CONDITION	POSSIBLE CAUSES	CORRECTION
FOG LAMPS ARE DIM WITH ENGINE IDLING OR IGNITION TURNED OFF.	1. Loose or corroded battery cables.	1. Clean and secure battery cable clamps and posts.
	2. Loose or worn generator drive belt.	2. Adjust or replace generator drive belt.
	3. Charging system output too low.	3. Test and repair charging system, refer to Electrical, Wiring Information.
	4. Battery has insufficient charge.	4. Test battery state-of-charge, refer to Electrical, Wiring Information.
	5. Battery is sulfated or shorted.	5. Load test battery, refer to Electrical, Wiring Information.
	6. Poor lighting circuit Z1-ground.	6. Test for voltage drop across Z1-ground locations, refer to Electrical, Wiring Information.
	7. Both fog lamp bulbs faulty.	7. Replace both fog lamp bulbs.
FOG LAMP BULBS BURN OUT FREQUENTLY.	1. Charging system output too high.	1. Test and repair charging system, refer to Electrical, Wiring Information.
	2. Loose or corroded terminals or splices in circuit.	2. Inspect and repair all connectors and splices, refer to Electrical, Wiring Information.
FOG LAMPS ARE DIM WITH ENGINE RUNNING ABOVE IDLE.	1. Charging system output too low.	1. Test and repair charging system, refer to Electrical, Wiring Information.
	2. Poor lighting circuit Z1-ground.	2. Test for voltage drop across Z1-ground locations, refer to Electrical, Wiring Information.
	3. High resistance in fog lamp circuit.	3. Test amperage draw of fog lamp circuit.
	4. Both fog lamp bulbs faulty.	4. Replace both fog lamp bulbs.
FOG LAMPS FLASH RANDOMLY.	1. Poor lighting circuit Z1-ground.	1. Test for voltage drop across Z1-ground locations, refer to Electrical, Wiring Information.
	2. High resistance in fog lamp circuit.	2. Test amperage draw of fog lamp circuit.
	3. Faulty fog lamp switch.	3. Replace fog lamp switch.
	4. Loose or corroded terminals or splices in circuit.	4. Inspect and repair all connectors and splices, refer to Electrical, Wiring Information.
FOG LAMPS DO NOT ILLUMINATE.	1. Blown fuse for fog lamps.	1. Replace fuse, refer to Electrical, Wiring Information.
	2. No Z1-ground at fog lamps.	2. Repair circuit ground, refer to Electrical, Wiring Information.
	3. Faulty fog lamp switch.	3. Replace fog lamp switch.
	4. Broken connector terminal or wire splice in fog lamp circuit.	4. Repair connector terminal or wire splice.

LAMPS/LIGHTING - EXTERIOR (Continued)

SPECIFICATIONS

EXTERIOR LAMPS

CAUTION: Do not use bulbs that have a higher candle power than the bulb listed in the Bulb Application Table. Damage to lamp can result.

CAUTION: Do not touch halogen bulbs with fingers or other oily surfaces. Bulb life will be reduced.

BULB APPLICATION TABLE

LAMP	BULB
BACK-UP	921 (W16W)
BRAKE	3157K
CHMSL	JR41 - W16W JR27 - LED
FRONT FOG LAMP	JR41 - 880 JR27 - 9006
HEADLAMP	9007
LICENSE PLATE	2825 (W5W)
PARK/TURN SIGNAL (FRONT)	3157NA
TAIL LAMP	2821 (W3W)
TAIL/SIDE MARKER (JR27 ONLY)	2821 (W3W)
TURN SIGNAL (REAR)	3757A
TAIL/STOP	3157

BULB APPLICATION TABLE - EXPORT

LAMP	BULB
FRONT POSITION PARK LAMP	W5W
FRONT TURN SIGNAL	PY27/7W
HEADLAMP	H4
REAR FOG	P27/7W
REAR TURN SIGNAL	PY27/7W
SIDE REPEATER	W5W
TAIL	W3W
TAIL/STOP	P27/7W

BRAKE LAMP SWITCH

DESCRIPTION

The brake lamp switch is located under the instrument panel at the brake pedal arm (Fig. 2). It controls operation of the vehicle's brake lamps. Also, if the vehicle is equipped with speed control, the brake lamp switch will deactivate speed control when the brake pedal is depressed.

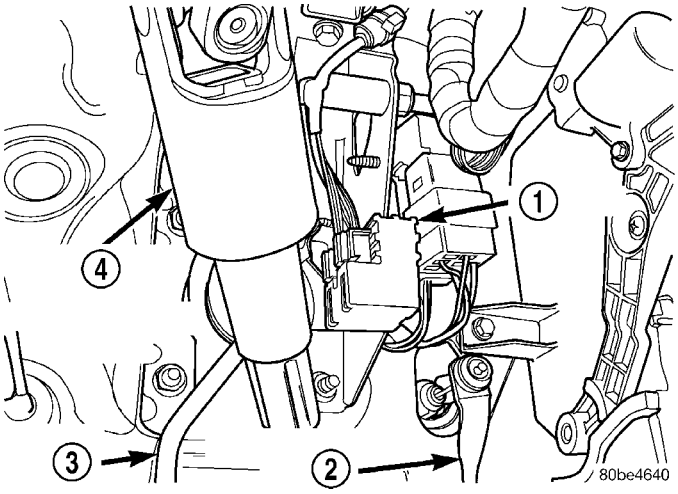

Fig. 2 Brake Lamp Switch

1 - SWITCH
2 - ACCELERATOR PEDAL
3 - BRAKE PEDAL
4 - STEERING COLUMN INTERMEDIATE SHAFT

OPERATION

When the brake pedal is depressed, the plunger on the outside of the switch extends outward. This action closes the electrical contacts within the switch, completing the circuit to the brake lamps at the rear of the vehicle, thus illuminating the brake lamps and the center-high-mounted stop lamp (CHMSL).

DIAGNOSIS AND TESTING - BRAKE LAMP SWITCH

NOTE: Before proceeding with this diagnostic test, verify the adjustment of the brake lamp switch to rule out misadjustment. Refer to ADJUSTMENTS.

If the electrical circuit has been tested and the brake lamp switch is suspected of being faulty, it can be tested using the following method.

(1) Remove the switch from the vehicle. Refer to REMOVAL for the proper procedure.

(2) With the switch in the released position (plunger extended), use an ohmmeter to test each of the three internal switches as shown (Fig. 3). You should achieve the results as listed in the figure.

BRAKE LAMP SWITCH (Continued)

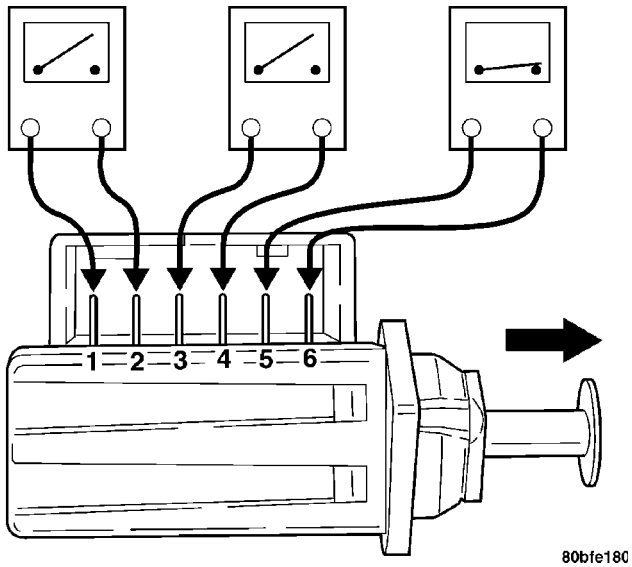

Fig. 3 SWITCH TEST - RELEASED

(3) Gently push the plunger on the brake lamp switch in until it stops.

(4) With the switch in the depressed position (plunger pushed in), use an ohmmeter to test each of the three internal switches as shown (Fig. 4). You should achieve the results as listed in the figure.

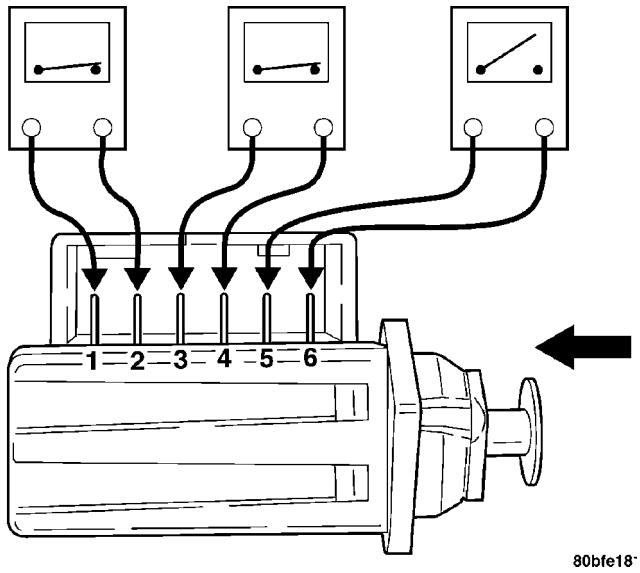

Fig. 4 SWITCH TEST - DEPRESSED POSITION

If you do not achieve the results as listed in both figures, the switch is faulty and must be replaced.

(5) Install the switch in the vehicle. Refer to INSTALLATION for the proper procedure.

REMOVAL

(1) Remove the brake lamp switch from its bracket (Fig. 5). The brake lamp switch is removed by depressing and holding the brake pedal while rotating brake lamp switch in a counter-clockwise direction approximately 30 degrees. Pull the switch rearward and remove it from its mounting bracket.

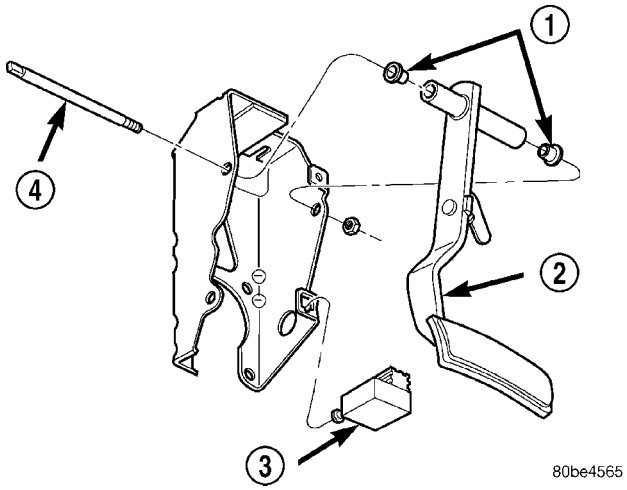

Fig. 5 Switch And Bracket

1 - BUSHINGS
2 - BRAKE PEDAL
3 - BRAKE LAMP SWITCH
4 - PIVOT SHAFT

(2) Disconnect the wiring harness connector from the switch.

INSTALLATION

NOTE: Prior to installing brake lamp switch into the mounting bracket, the plunger must be moved to its fully extended position using the procedure in Step 1.

(1) Hold the brake lamp switch firmly in one hand. Using the other hand, pull outward on the plunger of the switch until it has ratcheted out to its fully extended position.

(2) Connect the wiring harness connector to the brake lamp switch.

(3) Install the brake lamp switch in the brake pedal bracket (Fig. 5). Install it using the following procedure:

- Depress the brake pedal as far down as possible.
- Install the switch in its bracket by aligning the index tab on the switch with the slot in the mounting bracket.
- When the switch is fully seated in its bracket, rotate the switch clockwise approximately 30° to lock the switch into place. It should be aligned straight up and down (Fig. 2).

CAUTION: Do not use excessive force when pulling back on the brake pedal to adjust the brake lamp switch. If too much force is used, the switch or striker can be damaged.

BRAKE LAMP SWITCH (Continued)

(4) Gently release/pull back on the brake pedal until the pedal stops moving. This will ratchet the switch plunger backward to the correct adjustment position.

(5) Check the brake lamps to verify they are operating properly and not staying on when the pedal is in the released position.

ADJUSTMENTS

ADJUSTMENT - BRAKE LAMP SWITCH

(1) Remove the brake lamp switch from its bracket (Fig. 5). The brake lamp switch is removed by depressing and holding the brake pedal while rotating brake lamp switch in a counterclockwise direction approximately 30 degrees. Pull the switch rearward and remove it from its mounting bracket.

(2) Disconnect the wiring harness connector from the switch if necessary.

(3) Hold the brake lamp switch firmly in one hand. Using the other hand, pull outward on the plunger of the switch until it has ratcheted out to its fully extended position.

(4) Connect the wiring harness connector to the brake lamp switch if previously disconnected.

(5) Install the brake lamp switch in the brake pedal bracket (Fig. 5). Install it using the following procedure:

- Depress the brake pedal as far down as possible.
- Install the switch in its bracket by aligning the index tab on the switch with the slot in the mounting bracket.
- When the switch is fully seated in its bracket, rotate the switch clockwise approximately 30° to lock the switch into place. It should be aligned straight up and down (Fig. 2).

CAUTION: Do not use excessive force when pulling back on the brake pedal to adjust the brake lamp switch. If too much force is used, the switch or striker can be damaged.

(6) Gently release/pull back on the brake pedal until the pedal stops moving. This will ratchet the switch plunger backward to the correct adjustment position.

(7) Check the brake lamps to verify they are operating properly and not staying on when the pedal is in the released position.

CENTER HIGH MOUNTED STOP LAMP

REMOVAL

(1) Disconnect and isolate the battery negative cable.

(2) Remove fasteners from trunk latch cover by prying under the head of the fastener with a flat bladed tool.

(3) Remove trunk latch cover.

(4) Rotate socket counterclockwise one quarter turn.

(5) Pull socket from back of lamp.

(6) Pull bulb from socket.

INSTALLATION

(1) Push bulb into socket.

(2) Push socket into back of lamp.

(3) Rotate socket clockwise one quarter turn.

(4) Install trunk latch cover. Insert fasteners and press into place.

(5) Connect battery negative cable.

CENTER HIGH MOUNTED STOP LAMP UNIT

REMOVAL

(1) Disconnect and isolate the battery negative cable.

(2) Remove fasteners from trunk latch cover by prying under the head of the fastener with a flat bladed tool.

(3) Remove trunk latch cover.

(4) Remove socket from CHMSL.

(5) Remove screws attaching CHMSL to decklid (Fig. 6).

(6) Remove CHMSL from decklid.

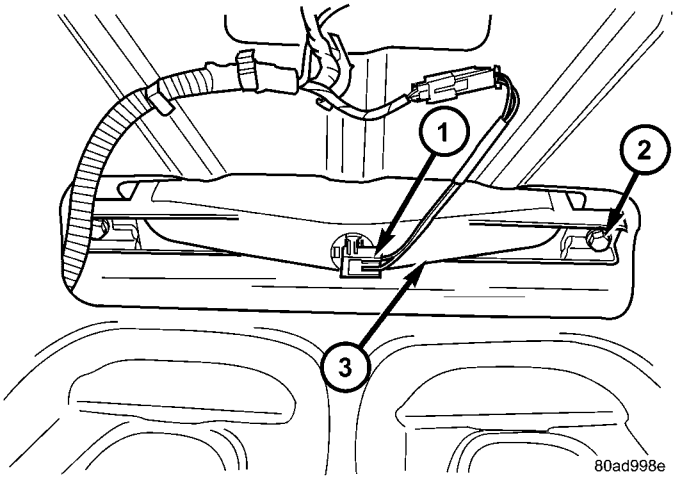

Fig. 6 CENTER HIGH MOUNTED STOP LAMP

1 - BULB
2 - FASTENER
3 - LAMP UNIT

CENTER HIGH MOUNTED STOP LAMP UNIT (Continued)

INSTALLATION

(1) Install CHMSL to decklid.
(2) Install screws attaching CHMSL to decklid.
(3) Install socket into CHMSL.
(4) Install trunk latch cover. Insert fasteners and press into place.
(5) Connect battery negative cable.

CENTER HIGH MOUNTED STOP LAMP UNIT - JR27 ONLY

REMOVAL

(1) Lower the convertible top.
(2) Disconnect and isolate the battery negative cable.
(3) Open trunk lid, and remove deck upper panel molding fasteners.
(4) Pull back trunk liner to access wire harness.
(5) Disconnect wire harness connector.
(6) Remove molding from vehicle.

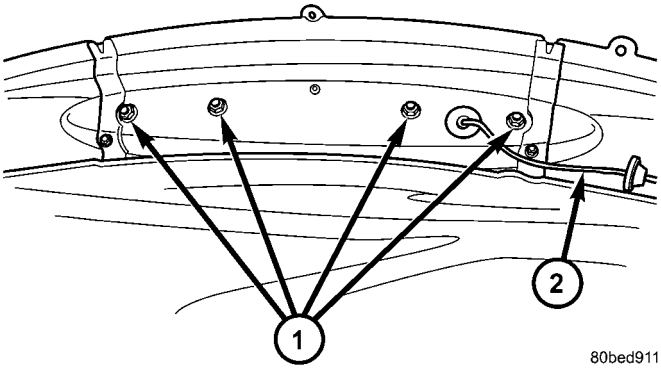

Fig. 7 CENTER HIGH MOUNTED STOP LAMP

1 - MOUNTING FASTENERS
2 - WIRE HARNESS

(7) Remove CHMSL mounting fasteners (Fig. 7).
(8) Remove CHMSL from molding.

INSTALLATION

(1) Install CHMSL to molding.
(2) Tighten mounting fasteners.
(3) Install molding to vehicle.
(4) Connect wire harness connector.
(5) Place trunk liner into position.
(6) Install deck upper panel molding fasteners.
(7) Connect the battery negative cable.

COMBINATION FLASHER

DESCRIPTION

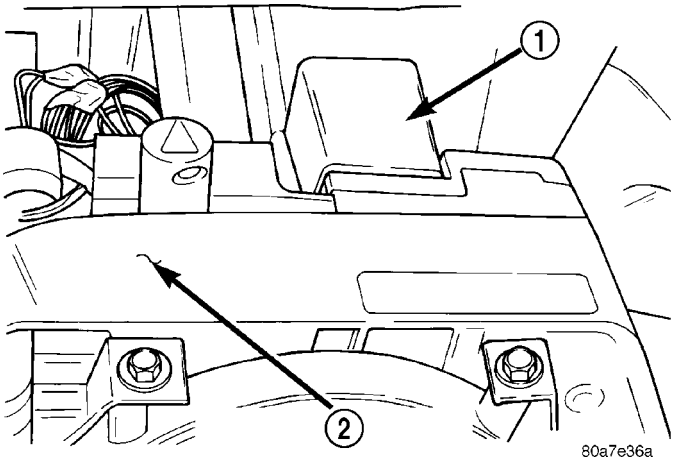

Fig. 8 COMBINATION FLASHER LOCATION

1 - COMBINATION FLASHER
2 - MULTI-FUNCTION SWITCH

The turn signal flasher and the hazard warning flasher are combined into one unit called a combination flasher (combo-flasher) (Fig. 8).

OPERATION

An inoperative or incomplete turn signal circuit will result in an increase in flasher speed.

The flasher is mounted to the back side of the multi-function switch.

COMBINATION FLASHER (Continued)

DIAGNOSIS AND TESTING - COMBINATION FLASHER

COMBINATION FLASHER DIAGNOSIS

CONDITION	POSSIBLE CAUSES	CORRECTION
SYSTEM DOES NOT FLASH ON ONE SIDE, INDICATOR LAMP FLASHES AT DOUBLE NORMAL RATE.	1) FAULTY EXTERNAL LAMP.	1) REPLACE LAMP.
	2) POOR GROUND AT LAMP.	2) CHECK AND/OR REPLACE WIRING.
	3) OPEN CIRCUIT IN WIRING TO EXTERNAL LAMP.	3) REPLACE WIRING HARNESS. CHECK CONNECTORS.
	4) FAULTY CONTACT ON SWITCH.	4) REPLACE MULTIFUNCTION SWITCH.
INDICATOR LAMP FLASHES AT DOUBLE THE NORNAL RATE. EXTERNAL LAMP-DIM AND FLASHES RAPIDLY OR NO FLASH	1) LOOSE OR CORRODED EXTERNAL LAMP CONNECTION.	1) REPLACE SOCKET/HARNESS.
	2) POOR GROUND CIRCUIT OR EXTERNAL LAMP.	2) REPLACE WIRING/HARNESS. CHECK CONNECTORS.
HAZARD WARNING MALFUNCTION/SYSTEM DOES NOT FLASH	1) FAULTY FUSE.	1) REPLACE FUSE.
	2) FAULTY FLASHER.	2) REPLACE FLASHER.
	3) OPEN CIRCUIT IN FEED WIRE TO SWITCH.	3) REPLACE WIRING/HARNESS. CHECK CONNECTORS.
	4) FAULTY CONTACT IN SWITCH.	4) REPLACE MULTIFUNCTION SWITCH.
	5) OPEN OR GROUNDED CIRCUIT IN WIRING TO EXTERNAL LAMPS.	5) REPLACE WIRING/HARNESS.
INDICATOR LAMP FLASHES AT DOUBLE NORMAL RATE, EXTERNAL LAMP DOES NOT LIGHT	1) OPEN CIRCUIT IN WIRE TO EXTERNAL LAMP.	1) REPLACE WIRING/HARNESS.
	2) BURNED OUT LAMP.	2) REPLACE LAMP.

COMBINATION FLASHER (Continued)

CONDITION	POSSIBLE CAUSES	CORRECTION
SYSTEM DOES NOT FLASH ON EITHER SIDE	1) FAULTY FUSE.	1)REPLACE FUSE.
	2) FAULTY FLASHER UNIT.	2) REPLACE FLASHER.
	3) LOOSE BULKHEAD CONNECTOR.	3) TIGHTEN CONNECTOR.
	4) LOOSE OR FAULTY REAR WIRING/HARNESS OR TERMINALS.	4) REPLACE WIRING/HARNESS.
	5) OPEN CIRCUIT TO FLASHER UNIT.	5) CHECK CONNECTORS, REPLACE WIRING/HARNESS.
	6) OPEN CIRCUIT IN FEED WIRE TO TURN SIGNAL SWITCH.	6) CHECK CONNECTORS, REPLACE WIRING/HARNESS.
	7) FAULTY SWITCH CONNECTION.	7) REPLACE SWITCH.
	8) OPEN OR GROUNDED CIRCUIT IN WIRING TO EXTERNAL LAMPS.	8) REPLACE WIRING/HARNESS.
	9) BURNED OUT LAMPS.	9) REPLACE LAMPS.
SYSTEM DOES NOT CANCEL AFTER COMPLETION OF TURN	1) BROKEN CANCELLING FINGER ON SWITCH.	1) REPLACE MULTIFUNCTION SWITCH.
	2) BROKEN OR MISSING CANCELLING CAM ON CLOCKSPRING.	2) REPLACE CLOCKSPRING.
	3) STICKING CANCELLING FINGER ON MULTIFUNCTION SWITCH.	3) REPLACE MULTIFUNCTION SWITCH.
EXTERNAL LAMPS OPERATE PROPERLY, NO INDICATOR LAMP OPERATION	1) FAULTY INDICATOR LAMP IN INSTRUMENT CLUSTER.	1) REPLACE LAMP.

REMOVAL

The flasher is mounted to the back side of the multi-function switch. To gain access, the upper steering column cover must be removed (Refer to 23 - BODY/INSTRUMENT PANEL/STEERING COLUMN OPENING COVER - REMOVAL). The flasher can be removed by pulling it forward. The flasher is serviced separately from the multi-function switch. The flasher is black in color for ease of identification (Fig. 8).

INSTALLATION

The flasher is mounted to the back side of the multi-function switch. To gain access, the upper steering column cover must be removed (Refer to 23 - BODY/INSTRUMENT PANEL/STEERING COLUMN OPENING COVER - REMOVAL). Push the flasher toward the rear of the vehicle. The flasher is black in color for ease of identification.

FOG LAMP

REMOVAL

(1) Disconnect and isolate battery negative cable.
(2) Remove fog lamp unit. (Refer to 8 - ELECTRICAL/LAMPS/LIGHTING - EXTERIOR/FOG LAMP UNIT - REMOVAL).
(3) Disconnect wire connector from back of fog lamp.
(4) Rotate bulb base counterclockwise one quarter turn.
(5) Pull bulb from back of lamp.

INSTALLATION

(1) Install bulb and twist clockwise.
(2) Connect the fog lamp harness connector.

FOG LAMP (Continued)

(3) Install foglamp unit. (Refer to 8 - ELECTRICAL/LAMPS/LIGHTING - EXTERIOR/FOG LAMP UNIT - INSTALLATION).

(4) Connect battery negative cable.

FOG LAMP UNIT

STANDARD PROCEDURE

STANDARD PROCEDURE - FOG LAMP UNIT ALIGNMENT

Prepare a alignment screen (Fig. 9) (Refer to 8 - ELECTRICAL/LAMPS/LIGHTING - EXTERIOR/ HEADLAMP UNIT - ADJUSTMENTS). A properly aligned fog lamp unit will project a pattern on the alignment screen 100 mm (4 in.) below the fog lamp center line and straight ahead.

To adjust fog lamp unit alignment, rotate alignment screw to achieve the specified low beam hot spot pattern (Fig. 10).

STANDARD PROCEDURE - FOG LAMP UNIT ALIGNMENT - EXPORT

Prepare an alignment screen (Refer to 8 - ELECTRICAL/LAMPS/LIGHTING - EXTERIOR/HEADLAMP UNIT - ADJUSTMENTS). A properly aligned fog lamp will project a pattern on the alignment screen 200 mm (8 in.) below the fog lamp centerline and straight ahead (Fig. 11). To adjust fog lamp alignment, rotate alignment screw to achieve the specified low beam hot spot pattern.

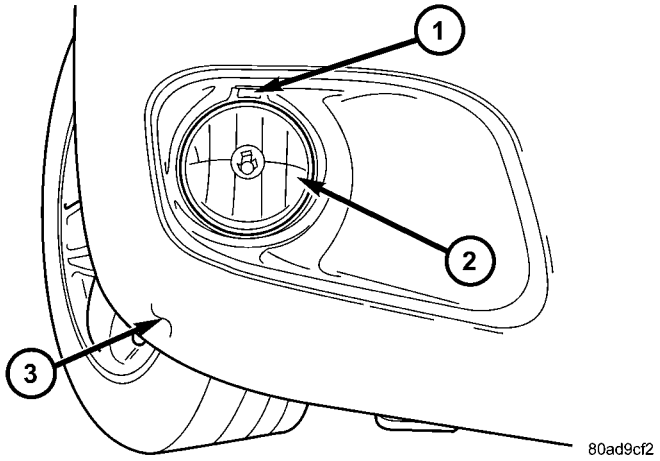

Fig. 10 FOG LAMP UNIT ADJUSTER

1 - FOG LAMP UNIT ADJUSTMENT SCREW
2 - FOG LAMP UNIT
3 - FRONT FASCIA

REMOVAL

(1) Disconnect and isolate the battery negative cable.

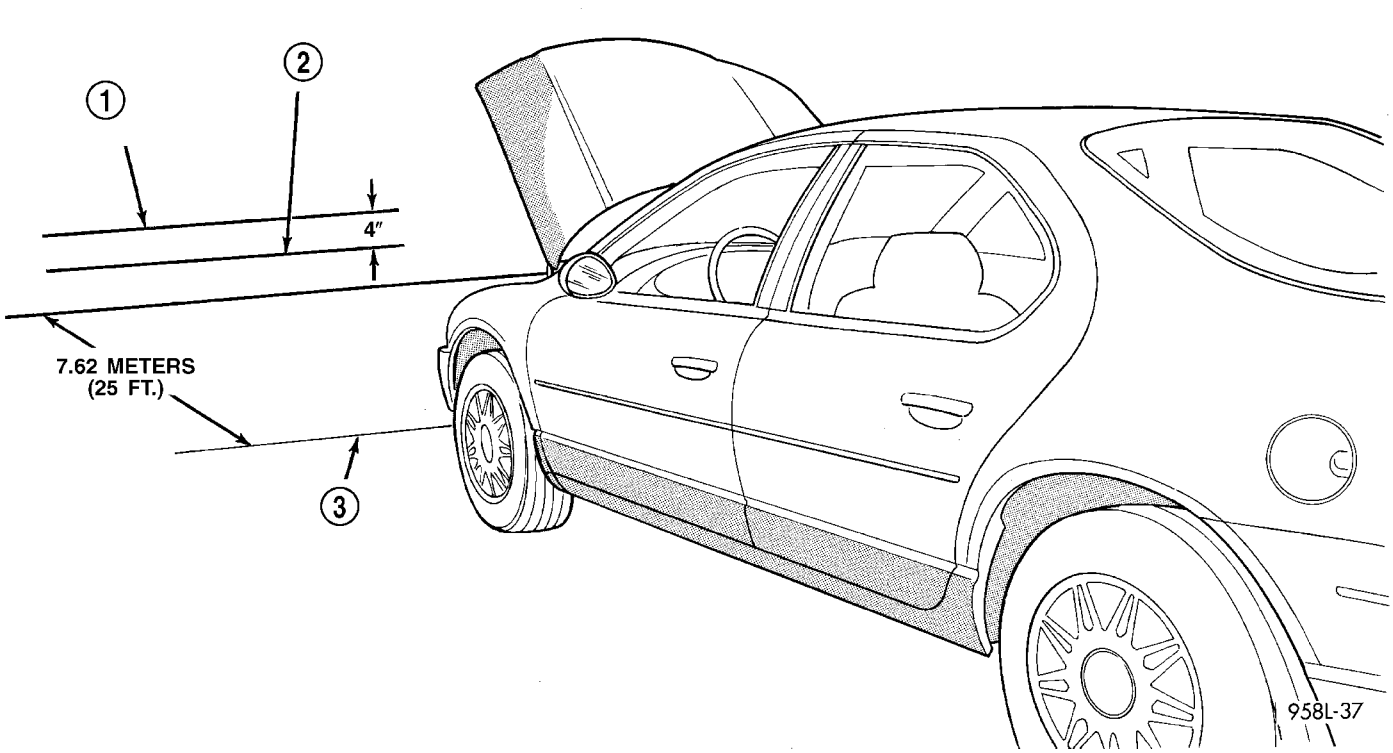

Fig. 9 FOG LAMP UNIT ALIGNMENT

1 - CENTER OF FOG LAMP UNIT
2 - TOP OF BEAM PATTERN
3 - FRONT OF FOG LAMP UNIT

FOG LAMP UNIT (Continued)

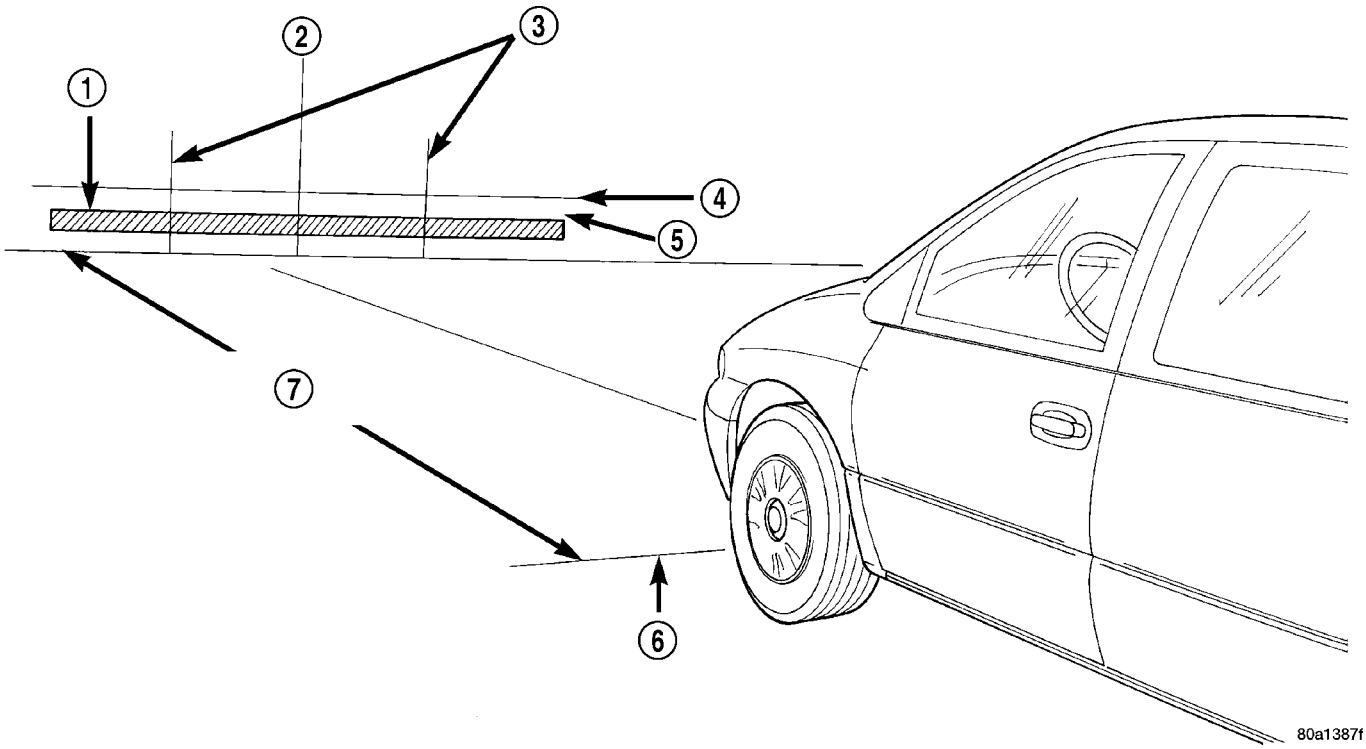

Fig. 11 FOG LAMP ALIGNMENT - EXPORT

1 - HIGH INTENSITY AREA
2 - CENTER OF VEHICLE
3 - VERTICAL CENTER OF FOG LAMP
4 - HORIZONTAL CENTER OF FOG LAMP
5 - 200mm (8 in.)
6 - FRONT OF FOG LAMP
7 - 10 METERS (32.8 ft.)

(2) Remove screw attaching fog lamp to front bumper fascia.
(3) Remove fog lamp from fascia.
(4) Disconnect wire connector from fog lamp bulb.
(5) Remove fog lamp from vehicle (Fig. 12).

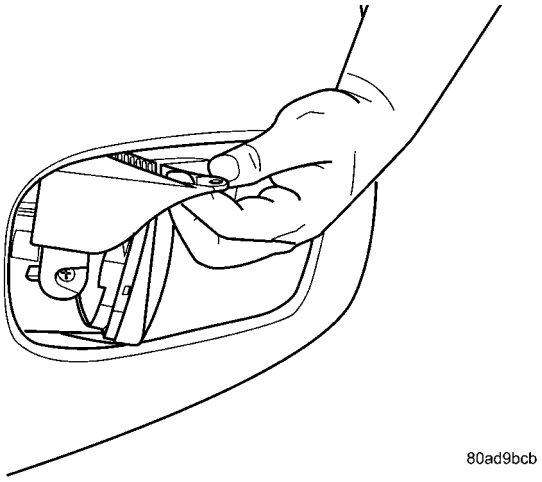

Fig. 12 FOG LAMP UNIT

INSTALLATION

(1) Place fog lamp into position.
(2) Connect wire connector to fog lamp bulb.
(3) Install fog lamp to fascia.
(4) Install screw attaching fog lamp to front bumper fascia.
(5) Connect battery negative cable.

FRONT POSITION LAMP - EXPORT

REMOVAL

(1) Disconnect and isolate the battery negative cable.
(2) Remove headlamp unit (Fig. 13) (Refer to 8 - ELECTRICAL/LAMPS/LIGHTING - EXTERIOR/ HEADLAMP UNIT - REMOVAL).
(3) Pull back rubber boot seal to expose lamp (Fig. 14).
(4) Pull front position lamp socket straight from the headlamp unit.
(5) Remove bulb from socket.

FRONT POSITION LAMP - EXPORT (Continued)

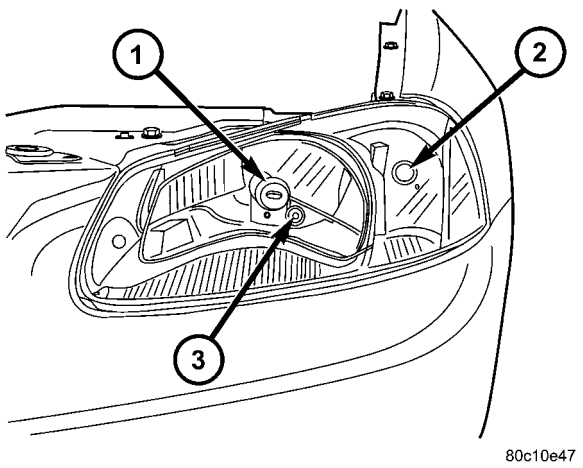

Fig. 13 FRONT POSITION LAMP LOCATION

1 - HEADLAMP
2 - PARK, TURN SIGNAL LAMP
3 - FRONT POSITION LAMP

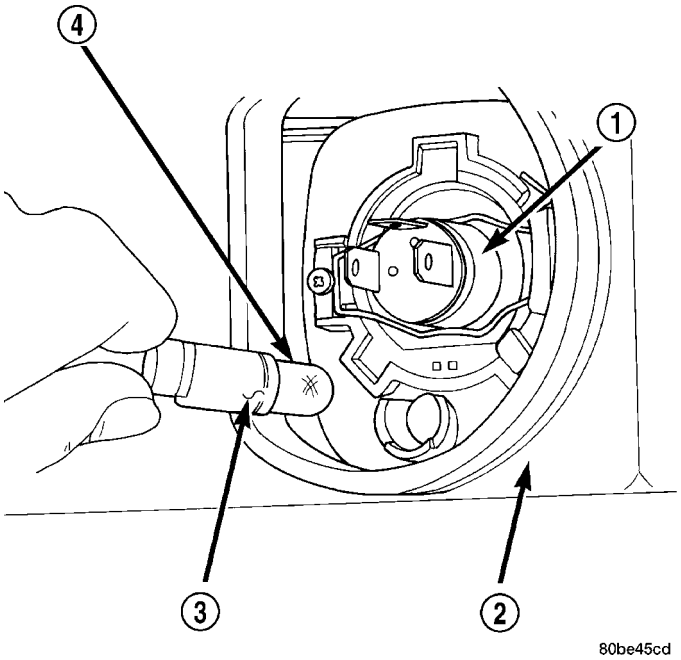

Fig. 14 FRONT POSITION LAMP

1 - HEADLAMP
2 - HEADLAMP UNIT
3 - FRONT POSITION LAMP SOCKET
4 - FRONT POSITION LAMP

INSTALLATION

(1) Insert bulb to socket.

(2) Install front position lamp socket to headlamp unit.

(3) Place rubber boot into position.

(4) Install headlamp unit (Refer to 8 - ELECTRICAL/LAMPS/LIGHTING - EXTERIOR/HEADLAMP UNIT - INSTALLATION).

(5) Connect battery negative cable.

HAZARD WARNING SWITCH

DESCRIPTION

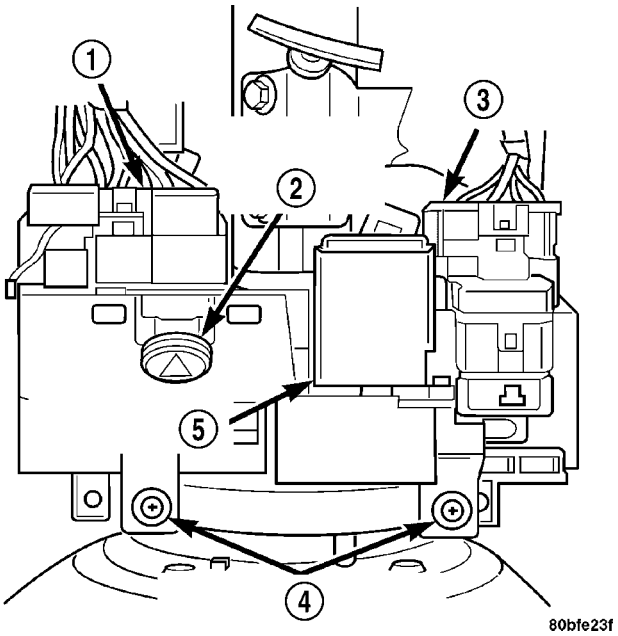

Fig. 15 HAZARD WARNING SWITCH

1 - MULTI-FUNCTION SWITCH CONNECTOR
2 - HAZARD WARNING SWITCH
3 - FLASHER AND WINDSHIELD WIPER/WASHER SWITCH CONNECTOR
4 - MOUNTING SCREWS
5 - COMBINATION FLASHER

The hazard warning switch push button protrudes from the top of the steering column (Fig. 15). The hazard warning switch push button is identified with a double triangle, which is the international control symbol for hazard warning.

OPERATION

The hazard warning system is actuated by a push button located on the top of the steering column between the steering wheel and the instrument panel. The hazard switch is identified with a double triangle on top of the button. Push and release the button to turn the hazard function ON or OFF. The button will move out from the steering column in the ON position and will remain in toward the column in the OFF position.

HEADLAMP

REMOVAL

CAUTION: Do not touch the glass of halogen bulbs with fingers or other possibly oily surface, reduced bulb life will result.

(1) Disconnect and isolate battery negative cable.
(2) Remove headlamp unit retaining screws.
(3) Remove headlamp unit to expose back of unit.
(4) Disconnect wire connector from back of headlamp bulb.
(5) Rotate retaining ring counterclockwise.
(6) Remove retaining ring.
(7) Pull headlamp bulb and remove from headlamp unit.

INSTALLATION

(1) Install headlamp bulb to the headlamp unit.
(2) Install headlamp bulb retaining ring.
(3) Rotate retaining ring clockwise.
(4) Connect wire connector to bulb.
(5) Install the headlamp unit.
(6) Install headlamp unit retaining screws.
(7) Connect the battery negative cable.

HEADLAMP - EXPORT

REMOVAL

CAUTION: Do not touch the glass of halogen bulbs with fingers or other possibly oily surface, reduced bulb life will result.

(1) Disconnect and isolate battery negative cable.
(2) Remove headlamp unit retaining screws.
(3) Remove headlamp unit to expose back of unit.
(4) Disconnect wire connector from back of headlamp.
(5) Pull back protective rubber seal.
(6) Disengage headlamp bulb retaining clip (Fig. 16).
(7) Pull headlamp bulb and remove from headlamp unit.

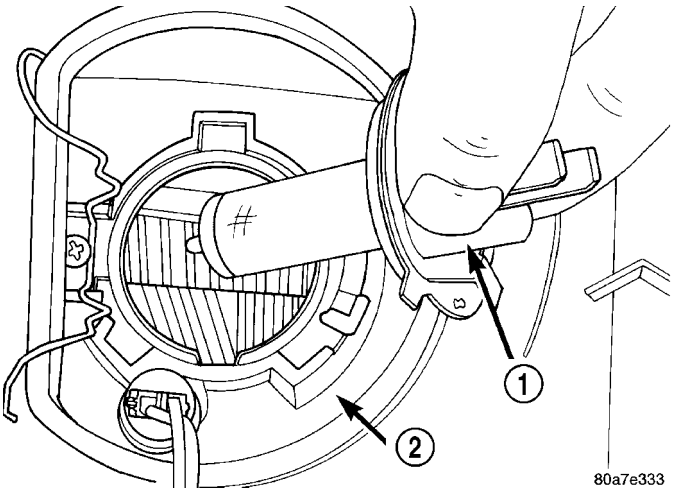

Fig. 16 HEADLAMP

1 - HEADLAMP
2 - HEADLAMP UNIT

INSTALLATION

CAUTION: Do not touch the glass of halogen bulbs with fingers or other possibly oily surface, reduced bulb life will result.

(1) Install headlamp to the headlamp unit and secure with retaining clip.
(2) Position protective rubber boot.
(3) Connect wire connector to headlamp.
(4) Install the headlamp unit.
(5) Install headlamp unit retaining screws.
(6) Connect the battery negative cable.

HEADLAMP LEVELING MOTOR - EXPORT

DIAGNOSIS AND TESTING - HEADLAMP LEVELING MOTOR - EXPORT

HEADLAMP LEVELING MOTOR DIAGNOSIS

CONDITION	POSSIBLE CAUSES	CORRECTION
ONE MOTOR DOES NOT OPERATE	1. Poor connection at motor.	1. Secure connector on motor.
	2. No voltage at motor.	2. Repair circuit. Refer to Group 8W, Wiring.
	3. Defective motor.	3. Replace motor.
BOTH MOTORS DO NOT OPERATE	1. No voltage at headlamp leveling switch.	1. Repair circuit or replace fuse. Refer to Group 8W, Wiring.
	2. No voltage at both motors.	2. Repair circuit or replace fuse. Refer to Group 8W, Wiring.
	3. Poor connection at motors.	3. Secure connectors on motors.
	4. Both motors defective.	4. Replace motors.

REMOVAL

(1) Disconnect and isolate the battery negative cable.

(2) Remove headlamp unit (Refer to 8 - ELECTRICAL/LAMPS/LIGHTING - EXTERIOR/HEADLAMP UNIT - REMOVAL).

(3) Rotate motor clock-wise and pull straight from headlamp unit. (Fig. 17).

NOTE: Significant force will be required to disconnect the leveling motor pushrod from the headlamp assembly.

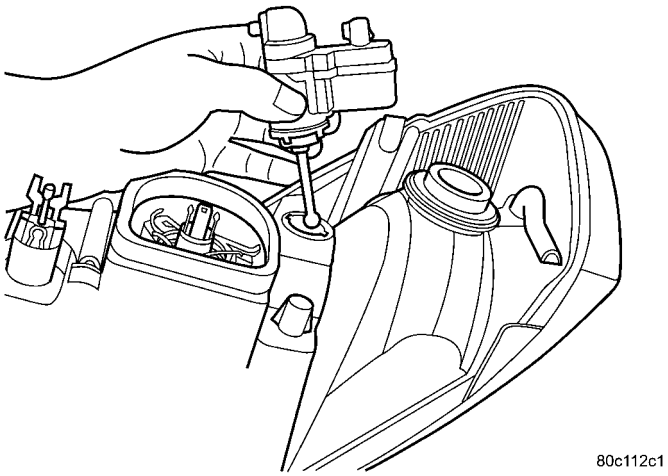

Fig. 17 HEADLAMP LEVELING MOTOR

INSTALLATION

(1) Insert and rotate the leveling motor into the headlamp unit.

NOTE: Be certain the leveling motor ball stud is fully inserted in headlamp leveling socket assembly.

(2) Install headlamp unit (Refer to 8 - ELECTRICAL/LAMPS/LIGHTING - EXTERIOR/HEADLAMP UNIT - INSTALLATION).

(3) Connect battery negative cable.

HEADLAMP LEVELING SWITCH

DIAGNOSIS AND TESTING - HEADLAMP LEVELING SWITCH - EXPORT

(1) Remove the headlamp leveling switch (Refer to 8 - ELECTRICAL/LAMPS/LIGHTING - EXTERIOR/HEADLAMP LEVELING SWITCH - REMOVAL).

(2) Using an ohmmeter, check the resistance readings between headlamp leveling switch pins. Refer to the headlamp leveling switch resistance table (Fig. 18).

HEADLAMP LEVELING SWITCH (Continued)

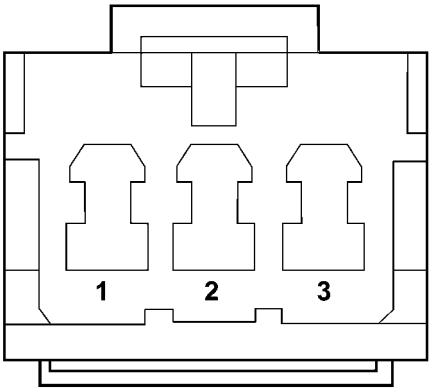

Fig. 18 HEADLAMP LEVELING SWITCH CONNECTOR

HEADLAMP LEVELING SWITCH RESISTANCE

SWITCH POSITION	PIN	RESISTANCE
0	1 AND 3	492 Ω
1	1 AND 3	546 Ω
2	1 AND 3	599 Ω
3	1 AND 3	653 Ω

REMOVAL

(1) Disconnect and isolate the battery negative cable.

(2) Using a trim stick, pry the trim bezel from the instrument panel (Fig. 19).

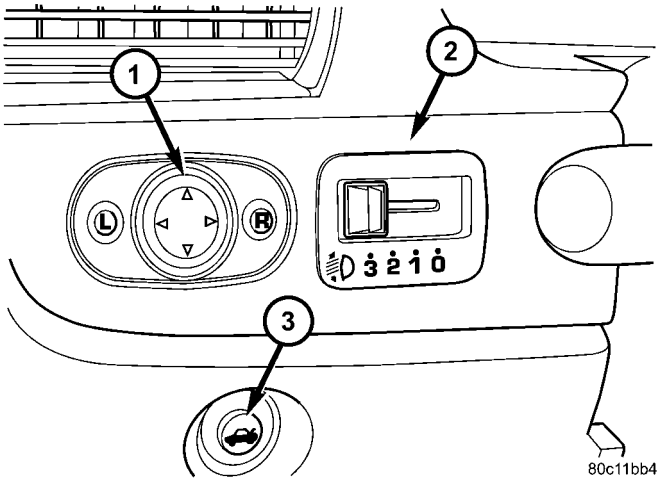

Fig. 19 HEADLAMP LEVELING SWITCH

1 - POWER MIRROR SWITCH
2 - HEADLAMP LEVELING SWITCH
3 - DECKLID RELEASE SWITCH

(3) Disconnect wire harness connector from switch.

(4) Remove switch from bezel.

INSTALLATION

(1) Install switch to trim bezel.

(2) Connect wire harness connector to switch.

(3) Install trim bezel to instrument panel.

(4) Connect battery negative cable.

HEADLAMP UNIT

STANDARD PROCEDURE - HEADLAMP UNIT ALIGNMENT

HEADLAMP ALIGNMENT PREPARATION

(1) Verify headlamp dimmer switch and high beam indicator operation.

(2) Inspect and correct damaged or defective components that could interfere with proper headlamp alignment.

(3) Verify proper tire inflation.

(4) Clean headlamp lenses.

(5) Verify that luggage area is not heavily loaded.

(6) Fuel tank should be FULL. Add 2.94 kg (6.5 lbs.) of weight over the fuel tank for each estimated gallon of missing fuel.

ALIGNMENT SCREEN PREPARATION

(1) Position vehicle on a level surface perpendicular to a flat wall 7.62 meters (25 ft.) away from front of headlamp lens (Fig. 20).

(2) If necessary, tape a line on the floor 7.62 meters (25 ft.) away from and parallel to the wall.

(3) From the ground up 1.27 meters (5 ft.), tape a line on the wall at the center line of the vehicle. Sight along the center line of the vehicle (from rear of vehicle forward) to verify accuracy of the line placement.

(4) Rock vehicle side-to-side three times to allow suspension to stabilize.

(5) Jounce front suspension three times by pushing downward on front bumper and releasing.

(6) Measure the distance from the center of headlamp lens to the ground. Transfer measurement to the alignment screen (with tape). Use this line for up/down adjustment reference.

(7) Measure distance from the center line of the vehicle to the center of each headlamp being aligned. Transfer measurements to screen (with tape) to each side of vehicle center line.

HEADLAMP ADJUSTMENT

A properly aimed left and right low beam headlamp will project the center of the low beam hot spot on the alignment screen below the horizontal center line and 6 in. (152 mm) right of headlamp center line (Fig. 20). The high beam headlamps cannot be aligned. The high beam pattern should be correct when the low beams are aligned properly.

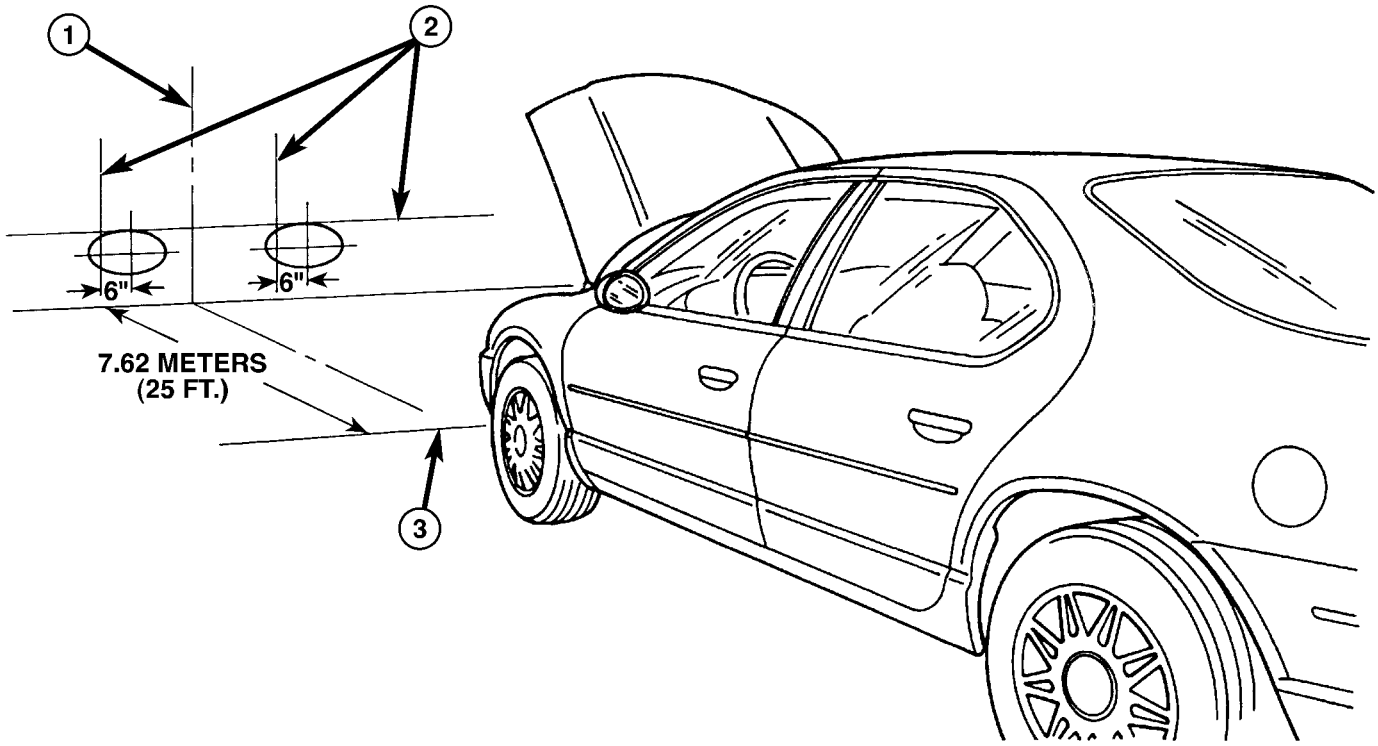

80b498b0

Fig. 20 HEADLAMP ALIGNMENT SCREEN

1 - CENTER OF VEHICLE
2 - CENTER OF HEADLAMPS
3 - FRONT OF HEADLAMP

To adjust headlamp alignment, rotate alignment screw to achieve the specified low beam hot spot pattern.

REMOVAL

(1) Disconnect and isolate the battery negative cable.
(2) Remove the two retaining screws.
(3) Remove upper fascia retainers by prying under the head of the fasteners with a flat bladed tool.
(4) Remove headlamp unit from fender side first, then pull headlamp unit out.
(5) Disconnect the wiring harness from the bulbs.
(6) Remove the headlamp unit.

INSTALLATION

(1) Connect wire harness to the bulbs.
(2) Install headlamp unit.
(3) Install the retaining screws.
(4) Install upper fascia retainers.
(5) Connect the battery negative cable.

HEADLAMP UNIT - EXPORT

STANDARD PROCEDURE - HEADLAMP UNIT ALIGNMENT - EXPORT

HEADLAMP ALIGNMENT PREPARATION

(1) Verify headlamps are on low setting.
(2) Verify that the headlamp leveling switch is in the “0” position.
(3) Inspect and correct damaged or defective components that could interfere with proper headlamp alignment.
(4) Verify proper tire inflation.
(5) Clean headlamp lenses.
(6) Verify that luggage area is loaded as the vehicle is routinely used.
(7) Fuel tank should be FULL. Add 2.94 kg (6.5 lbs.) of weight over the fuel tank for each estimated gallon of missing fuel.

ALIGNMENT SCREEN PREPARATION

(1) Position vehicle on a level surface perpendicular to a flat wall 10 meters (32.8 ft.) away from front of headlamp lens (Fig. 21).

HEADLAMP UNIT - EXPORT (Continued)

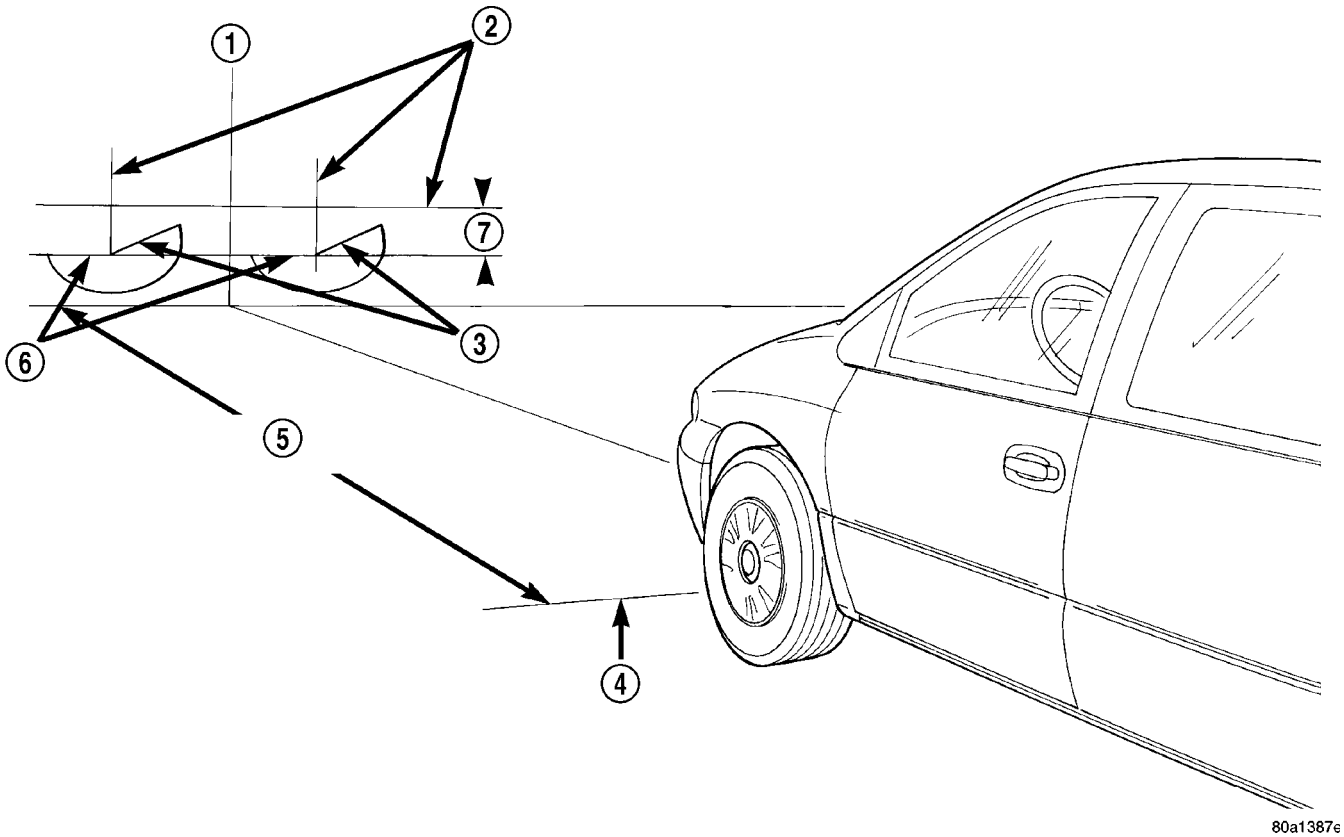

Fig. 21 HEADLAMP ALIGNMENT SCREEN - EXPORT

1 - CENTER OF VEHICLE
2 - CENTER OF HEADLAMPS
3 - 15° CUT-OFF LINE
4 - FRONT OF HEADLAMP
5 - 10 METERS (32.8 ft.)
6 - HORIZONTAL CUT-OFF LINE
7 - 130mm

(2) Place 75 kg in the driver's seat to simulate the ride height of the vehicle when driven.

(3) If necessary, tape a line on the floor 10 meters (32.8 ft.) away from and parallel to the wall.

(4) From the floor up 1.27 meters (5 ft.), tape a line on the wall at the centerline of the vehicle. Sight along the centerline of the vehicle (from rear of vehicle forward) to verify accuracy of the line placement.

(5) Rock vehicle side-to-side three times and allow suspension to stabilize.

(6) Jounce front suspension three times by pushing downward on front bumper and releasing.

(7) Measure the distance from the center of headlamp lens to the floor. Transfer measurement to the alignment screen (with tape). Use this line for up/down adjustment reference.

(8) Place a tape line 130 mm below and parallel to the center of headlamp line.

(9) Measure distance from the centerline of the vehicle to the center of each headlamp being aligned. Transfer measurements to screen (with tape) to each side of vehicle centerline. Use these lines for left/right adjustment reference.

HEADLAMP ALIGNMENT

A properly aimed low beam headlamp will project a high intensity light pattern on the screen with the horizontal cut-off line aligned with the tape line 130 mm (5.12 in.) below the headlamp centerline (Fig. 21). The intersection of the horizontal and 15 degree cut-off lines in the projected pattern should align to the intersection of the headlamp centerline vertical tape line and the tape line 130 mm (5.12 in.) below the headlamp horizontal centerline. The high beam pattern should be correct when the low beams are aligned properly.

To adjust headlamp alignment, rotate alignment screws to achieve the specified low beam hot spot pattern (Fig. 22).

REMOVAL

(1) Disconnect and isolate the battery negative cable.

(2) Remove the two retaining screws.

(3) Remove upper fascia retainers by prying under the head of the fasteners with a flat bladed tool.

HEADLAMP UNIT - EXPORT (Continued)

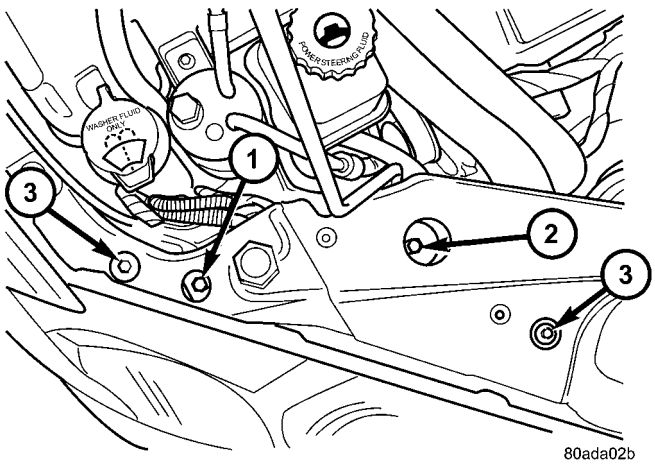

Fig. 22 HEADLAMP ALIGNMENT SCREWS

1 - HEADLAMP ADJUSTER - VERTICAL
2 - HEADLAMP ADJUSTER - HORIZONTAL
3 - HEADLAMP RETAINING BOLTS

(4) Remove headlamp unit from fender side first, then pull headlamp unit out (Fig. 23).

(5) Disconnect the wiring harness from the bulbs.

(6) Disconnect electrical connector from headlamp leveling motor.

(7) Remove the headlamp unit.

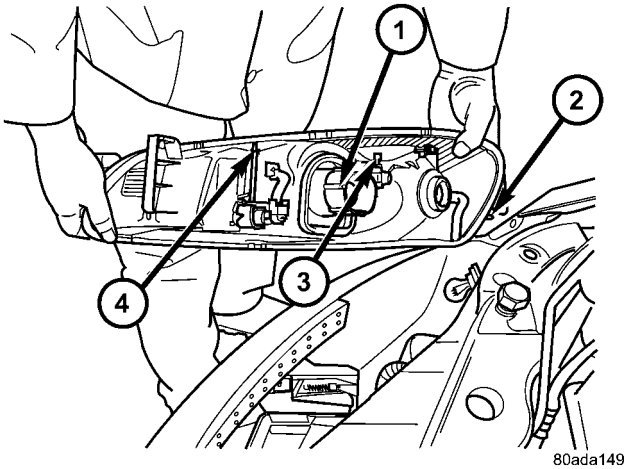

Fig. 23 HEADLAMP UNIT

1 - HEADLAMP
2 - LOCATING TAB
3 - HEADLAMP ADJUSTER
4 - HEADLAMP ADJUSTER

INSTALLATION

(1) Connect wire harness.

(2) Connect wire harness to headlamp leveling motor.

(3) Install headlamp unit.

(4) Install the retaining screws.

(5) Install upper fascia retainers.

(6) Connect the battery negative cable.

LICENSE PLATE LAMP

REMOVAL

(1) Disconnect and isolate the battery negative cable.

(2) Remove screws attaching license plate lamp to rear bumper fascia.

(3) Remove license plate lamp (Fig. 24).

(4) Rotate socket counterclockwise one quarter turn.

(5) Pull socket from back of lamp.

(6) Pull bulb from socket.

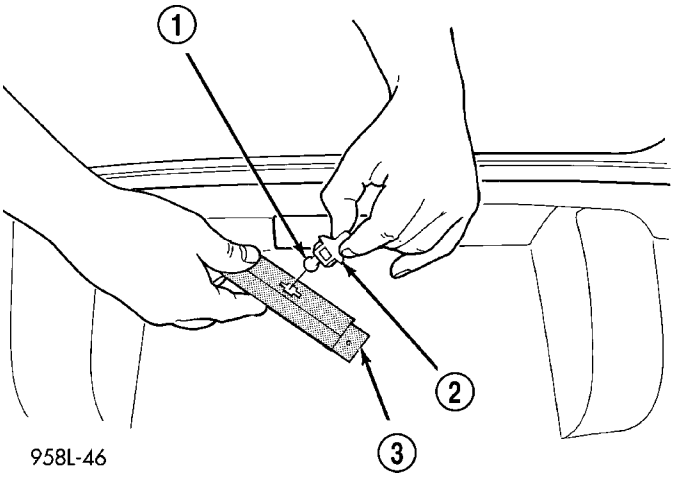

Fig. 24 License Plate Lamp Bulb

1 - BULB
2 - SOCKET
3 - LICENSE PLATE LAMP

INSTALLATION

(1) Place bulb into socket.

(2) Push socket into back of lamp.

(3) Rotate socket clockwise one quarter turn.

(4) Install license plate lamp.

(5) Install screws attaching license plate lamp.

(6) Connect battery negative cable.

LICENSE PLATE LAMP UNIT

REMOVAL

(1) Disconnect and isolate the battery negative cable.

(2) Remove screws attaching license plate lamp (Fig. 25).

(3) Remove license plate lamp from fascia.

(4) Remove socket from lamp.

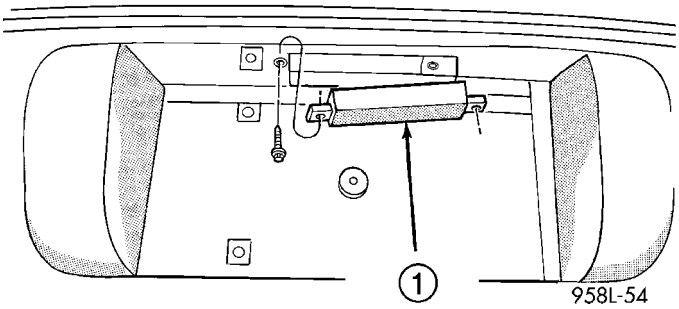

Fig. 25 License Plate Lamp

1 - LICENSE PLATE LAMP

INSTALLATION

(1) Install socket to lamp.

(2) Install license plate lamp to fascia.

(3) Install screws attaching license plate lamp.

(4) Connect the battery negative cable.

LICENSE PLATE LAMP UNIT - JR27 ONLY

REMOVAL

(1) Disconnect and isolate the battery negative cable.

(2) Using a flat bladed tool, gently pry the lamp from the license plate opening.

(3) Disconnect the wire harness connector.

(4) Remove bulb.

INSTALLATION

(1) Install bulb.

(2) Connect the wire harness connector.

(3) Press lamp into position.

(4) Connect the battery negative cable.

MULTI-FUNCTION SWITCH

DESCRIPTION

The multi-function switch (Fig. 26) contains:

- Turn signals
- Hazard warning
- Headlamps
- Headlamp beam select
- Parking lamps
- Panel dimmer
- Fog Lamp
- Headlamp optical horn
- Windshield wiper
- Pulse wipe
- Mist wipe
- Windshield washer switches.

The multi-function switch is mounted center of the steering column. There are two levers, one on each side of the steering column.

OPERATION

The left side controls the signaling and lighting. The right side controls the windshield wiper and washer system. When the driver wishes to signal his intentions to change direction of travel, he moves the left lever upward to cause the right signals to flash and downward to cause the left signals to flash. After completion of a turn the system is deactivated automatically. As the steering wheel returns to the straight ahead position the turn signals are canceled. A canceling cam is molded to the clock spring mechanism which comes in contact with the cancel actuator on the multi-function switch. The canceling cam lobe pushes on the cancel actuator and returns the switch to the off position.

If only momentary signaling such as indication of a lane change is desired, the switch is actuated to a left or right intermediate detent position. In this position the signal lamps flash as described above, but the switch returns to the OFF position as soon as the lever is released.

When the system is activated, one of two indicator lamps mounted in the instrument cluster flashes in unison with the turn signal lamps, indicating to the driver that the system is operating. The windshield wiper and wash system is covered in Wipers/Washers.

MULTI-FUNCTION SWITCH (Continued)

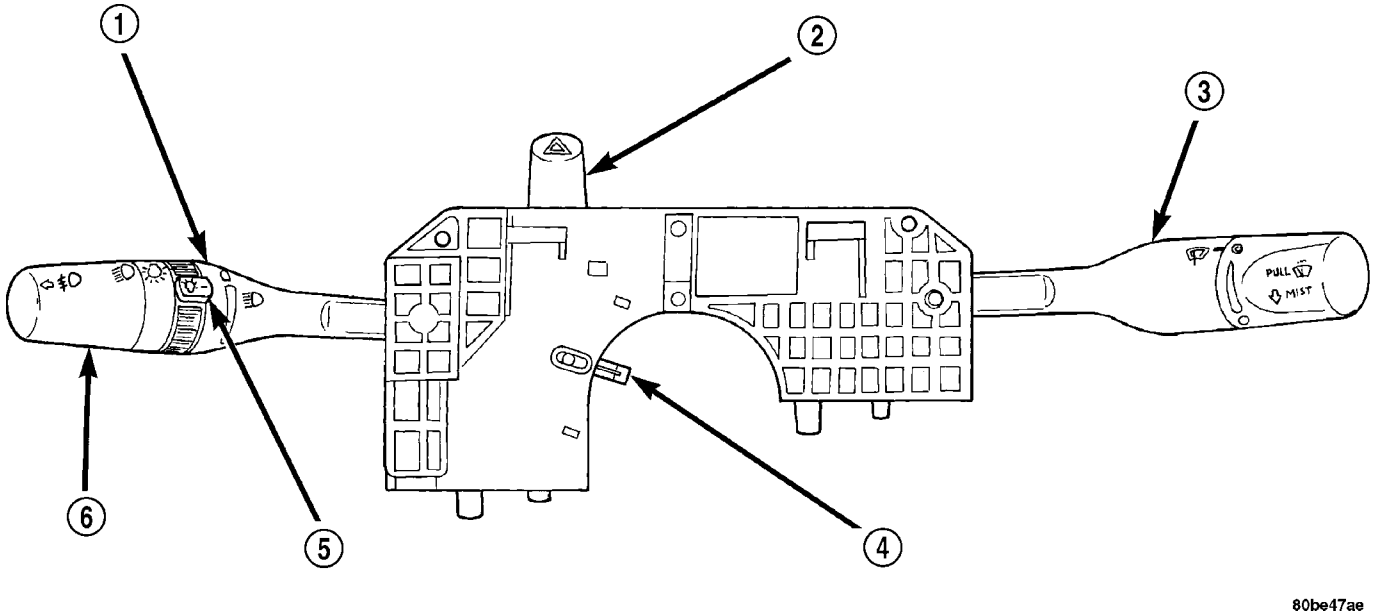

Fig. 26 MULTI-FUNCTION SWITCH

1 - TURN SIGNAL CONTROL STALK
2 - HAZARD WARNING BUTTON
3 - WINDSHIELD WIPER/WASHER CONTROL
4 - CANCELING ACTUATOR
5 - PANEL DIMMER SWITCH
6 - EXTERIOR LIGHTING CONTROL

DIAGNOSIS AND TESTING - MULTI-FUNCTION SWITCH

(1) Remove multi-function switch (Refer to 8 - ELECTRICAL/LAMPS/LIGHTING - EXTERIOR/ MULTI-FUNCTION SWITCH - REMOVAL).

(2) Using an ohmmeter, test for continuity/resistance between the terminals of the switch as shown in the MULTI-FUNCTION SWITCH CONTINUITY/ RESISTANCE table. Refer to Wiring Diagrams for C1 and C2 connector pin-outs. Refer to (Fig. 27) for combination flasher (A) pin-outs.

The switch assembly is mounted over the center of the steering column under the steering column shrouds. Should any function of the switch fail, the entire switch assembly must be replaced.

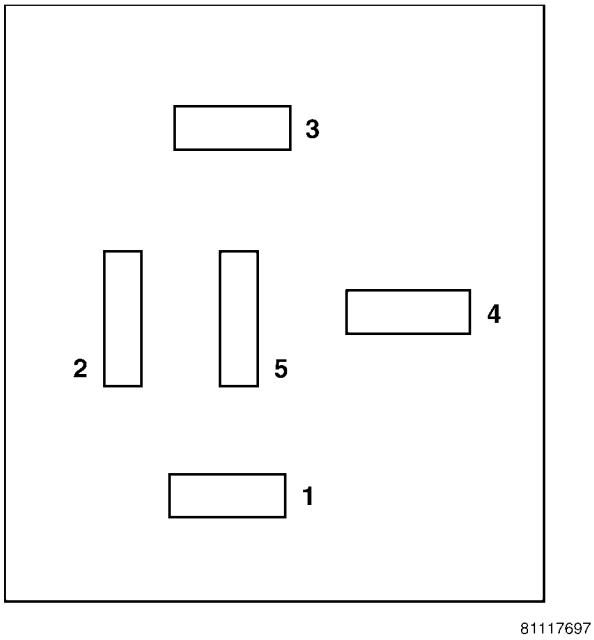

Fig. 27 COMBO FLASHER CONNECTOR (A)

MULTI-FUNCTION SWITCH (Continued)

MULTI-FUNCTION SWITCH CONTINUITY/RESISTANCE

SWITCH POSITION	MODE	CONTINUITY/RESISTANCE
TURN SIGNAL/HAZARD SWITCH	RIGHT	CONTINUITY BETWEEN (C1) 2 AND A2
	LEFT	CONTINUITY BETWEEN (C1) 1 AND A2
	HAZARD	CONTINUITY BETWEEN (C1) 5 AND A5 CONTINUITY BETWEEN (C1) 1 AND A2 CONTINUITY BETWEEN (C1) 2 AND A2
WIPER/WASHER SWITCH	MIST	1110 Ω ± 5% BETWEEN (C1) 4 AND (C1) 9
	WASH	CONTINUITY BETWEEN (C1) 3 AND (C1) 9
	OFF	OPEN BETWEEN (C1) 4 AND (C1) 9
	INTERMITTENT 1	28.25K Ω ± 5% BETWEEN (C1) 4 AND (C1) 9
	INTERMITTENT 2	12.25K Ω ± 5% BETWEEN (C1) 4 AND (C1) 9
	INTERMITTENT 3	6.65K Ω ± 5% BETWEEN (C1) 4 AND (C1) 9
	INTERMITTENT 4	3.95K Ω ± 5% BETWEEN (C1) 4 AND (C1) 9
	INTERMITTENT 5	2.45K Ω ± 5% BETWEEN (C1) 4 AND (C1) 9
	INTERMITTENT 6	1.54K Ω ± 5% BETWEEN (C1) 4 AND (C1) 9
	LOW	1.11K Ω ± 5% BETWEEN (C1) 4 AND (C1) 9
	HIGH	680 Ω ± 5% BETWEEN (C1) 4 AND (C1) 9
DIMMER SWITCH	DOME DEFEAT/OFF	99.9K Ω BETWEEN (C2) 8 AND (C2) 9
	DIMMER 1	43.9K Ω BETWEEN (C2) 8 AND (C2) 9
	DIMMER 2	23.9K Ω BETWEEN (C2) 8 AND (C2) 9
	DIMMER 3	14.8K Ω BETWEEN (C2) 8 AND (C2) 9
	DIMMER 4	9.2K Ω BETWEEN (C2) 8 AND (C2) 9
	DIMMER 5	5.6K Ω BETWEEN (C2) 8 AND (C2) 9
	DIMMER 6	3.6K Ω BETWEEN (C2) 8 AND (C2) 9
	FUNERAL MODE	2K Ω BETWEEN (C2) 8 AND (C2) 9
	DOME LAMP ON	1K Ω BETWEEN (C2) 8 AND (C2) 9
EXTERIOR LAMPS SWITCH	OPTICAL HORN	CONTINUITY BETWEEN (C2) 3 AND (C2) 4 WITH SWITCH IN THE OFF POSITION
	FOG LAMP	CONTINUITY BETWEEN (C2) 11 AND (C2) 12
	PARK LAMPS	CONTINUITY BETWEEN (C2) 6 AND (C2) 7
	HEADLAMPS LOW BEAM	(C2) 1 OR (C2) 2 AND (C2) 4 OR (C2) 5 - CONTINUITY ON LOW BEAM, OPEN ON HIGH BEAM
	HEADLAMPS HIGH BEAM	CONTINUITY BETWEEN (C2) 3 AND (C2) 4/(C2) 5

MULTI-FUNCTION SWITCH (Continued)

REMOVAL

(1) Disconnect and isolate the battery negative remote cable.

(2) Remove the upper steering column shroud. Refer to Steering, Column, Shroud, Removal.

(3) Remove multi-function switch mounting screws (Fig. 28).

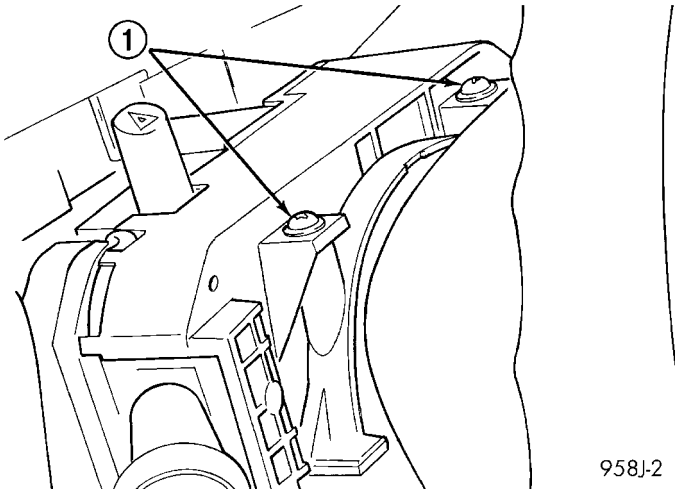

Fig. 28 MULTI-FUNCTION SWITCH MOUNTING

1 - MOUNTING SCREWS

(4) Disconnect wire connectors. Lift the switch straight up to remove.

INSTALLATION

Position the switch on the steering column and install the retaining screws.

(1) Tighten multi-function switch to column retaining screws to 2.3 N·m (20 in. lbs.) torque.

(2) Install the steering shrouds and screws. Refer to Steering, Column, Shroud, Installation.

(3) Tighten steering column cover retaining screws to 2 N·m (17 in. lbs.) torque.

(4) Connect the battery negative cable.

PARK/TURN SIGNAL LAMP

REMOVAL

(1) Disconnect and isolate battery negative cable.

(2) Remove headlamp retaining screws.

(3) Remove headlamp to expose back of unit.

(4) Rotate socket counterclockwise one quarter turn.

(5) Pull socket from back of lamp (Fig. 29).

(6) Pull bulb from socket.

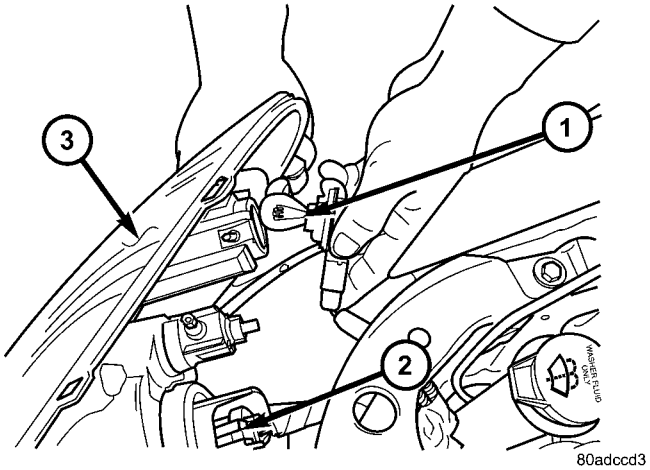

Fig. 29 Park and Turn Signal Lamp Bulb

1 - PARK/TURN SIGNAL BULB
2 - HEADLAMP BULB
3 - HEADLAMP UNIT

INSTALLATION

(1) Push bulb into socket.

(2) Twist socket into headlamp.

(3) Install headlamp retaining screws.

(4) Connect battery negative cable.

REAR FOG LAMP - EXPORT

REMOVAL

(1) Disconnect and isolate the battery negative cable.

(2) Remove the rear fog lamp unit (Refer to 8 - ELECTRICAL/LAMPS/LIGHTING - EXTERIOR/ REAR FOG LAMP UNIT - REMOVAL).

(3) Rotate lamp counterclockwise and pull from socket.

INSTALLATION

(1) Install bulb to socket.

(2) Install rear fog lamp unit to fascia (Refer to 8 - ELECTRICAL/LAMPS/LIGHTING - EXTERIOR/ REAR FOG LAMP UNIT - INSTALLATION).

(3) Connect battery negative cable.

REAR FOG LAMP UNIT - EXPORT

REMOVAL

(1) Disconnect and isolate the battery negative cable.

(2) Remove the appropriate rear fog lamp retaining screws and pull from rear fascia (Fig. 30).

(3) Rotate the rear fog lamp socket counterclockwise one quarter turn and pull straight out of lamp housing.

(4) Remove the rear fog lamp unit from the vehicle.

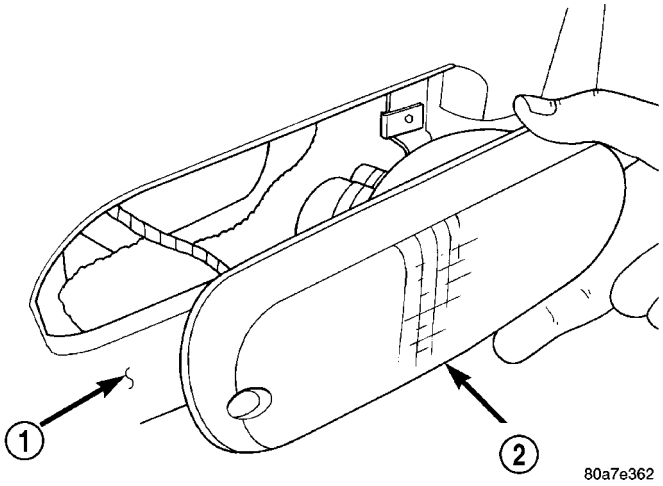

Fig. 30 REAR FOG LAMP UNIT

1 - REAR FASCIA
2 - REAR FOG LAMP UNIT

INSTALLATION

(1) Install the rear fog lamp socket in the lamp housing.

(2) Position and install the rear fog lamp unit to the rear fascia.

(3) Connect the battery negative cable.

SIDE REPEATER LAMP UNIT - EXPORT

REMOVAL

(1) Disconnect and isolate the battery negative cable.

(2) Open door to gain access to the rear of side repeater lamp (Fig. 31).

(3) Depress upper and lower tabs on repeater lamp to release lamp from fender.

(4) Rotate side repeater lamp socket counter clockwise and pull from lamp (Fig. 32).

(5) Remove bulb from socket.

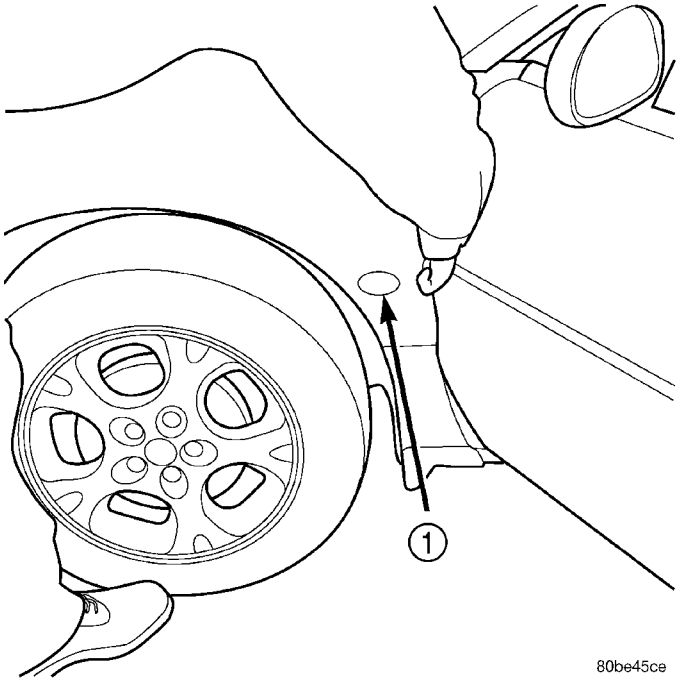

Fig. 31 ACCESS TO SIDE REPEATER LAMP

1 - SIDE REPEATER LAMP

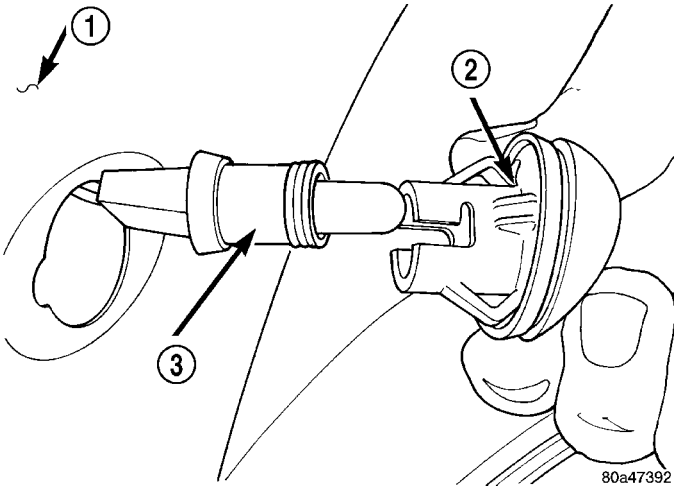

Fig. 32 SIDE REPEATER LAMP

1 - FRONT FENDER
2 - SIDE REPEATER LAMP
3 - SIDE REPEATER LAMP SOCKET

INSTALLATION

(1) Install lamp in socket.

(2) Install side repeater lamp in lamp socket.

(3) Install lamp into front fender opening.

(4) Connect battery negative cable.

TAIL LAMP

REMOVAL

(1) Disconnect and isolate battery negative cable.
(2) Remove the tail lamp unit (Refer to 8 - ELECTRICAL/LAMPS/LIGHTING - EXTERIOR/TAIL LAMP UNIT - REMOVAL).
(3) Rotate socket counterclockwise one quarter turn.
(4) Pull socket from back of lamp.
(5) Pull bulb from socket.

INSTALLATION

(1) Push bulb into socket.
(2) Push socket into back of lamp.
(3) Rotate socket counterclockwise one quarter turn.
(4) Install the tail lamp unit (Refer to 8 - ELECTRICAL/LAMPS/LIGHTING - EXTERIOR/TAIL LAMP UNIT - INSTALLATION).
(5) Connect battery negative cable.

TAIL LAMP UNIT

REMOVAL

(1) Disconnect and isolate battery negative cable.
(2) Disconnect wire harness connector from tail lamp unit by sliding the red lock, then pressing release tab.
(3) Remove wing-nuts attaching tail lamp.
(4) Remove lamp from opening in quarter panel (Fig. 33).
(5) Disconnect wire connector from back of tail lamp (left side).
(6) Remove tail lamp from vehicle.

INSTALLATION

(1) Place tail lamp into position.
(2) Connect wire connector to back of tail lamp (left side).
(3) Install lamp to opening in quarter panel.
(4) Install wing-nuts attaching tail lamp to rear closure panel.
(5) Reconnect wire harness connector to the tail lamp. Slide lock into position.
(6) Connect battery negative cable.

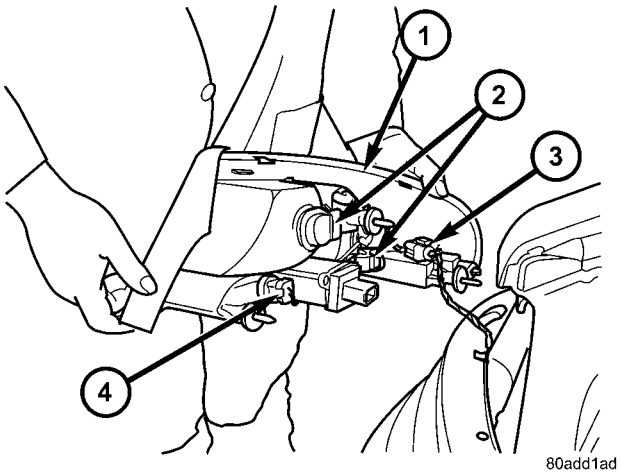

Fig. 33 Tail Lamp

1 - TAIL LAMP UNIT
2 - TAIL LAMP BULB
3 - WIRE HARNESS CONNECTOR
4 - BACK-UP BULB

TRUNK LAMP UNIT

REMOVAL

(1) Disconnect and isolate the battery negative cable.
(2) Using a flat bladed tool, pry lamp housing from rear shelf.
(3) Disconnect wire harness connector.
(4) Remove bulb.

INSTALLATION

(1) Install bulb.
(2) Connect wire harness connector to the lamp.
(3) Install housing into rear shelf.
(4) Connect battery negative cable.

LAMPS/LIGHTING - INTERIOR

TABLE OF CONTENTS

page

LAMPS/LIGHTING - INTERIOR
SPECIFICATIONS
INTERIOR LAMPS 27
CLUSTER ILLUMINATION AND WARNING LAMPS
REMOVAL 28
INSTALLATION 28
COMPAPSS MINI TRIP COMPUTER/TRAVELER ILLUMINATION LAMP
REMOVAL 29
INSTALLATION 29
CONSOLE COURTESY LAMP - JR27 ONLY
REMOVAL 29
INSTALLATION 29
DOME LAMP
REMOVAL 29
INSTALLATION 29
DOME LAMP BULB
REMOVAL 29
INSTALLATION 29
DOOR COURTESY LAMP - JR27 ONLY
REMOVAL 30
INSTALLATION 30
ILLUMINATED ENTRY
DESCRIPTION 30
DIAGNOSIS AND TESTING - ILLUMINATED ENTRY 30
READING LAMP
REMOVAL 30
INSTALLATION 30
TRANSMISSION RANGE INDICATOR ILLUMINATION
REMOVAL 31
INSTALLATION 31
VANITY LAMP
REMOVAL 31
INSTALLATION 31

LAMPS/LIGHTING - INTERIOR

SPECIFICATIONS

INTERIOR LAMPS

CAUTION: Do not use bulbs that have a higher candle power than the bulb listed in the Bulb Application Table. Damage to lamp can result.

CAUTION: Do not touch halogen bulbs with fingers or other oily surfaces. Bulb life will be reduced.

BULB APPLICATION TABLE

LAMP	BULB
AIRBAG	PC194
A/C HEATER CONTROL	PC37
ABS	PC161
BRAKE	PC194
CHARGING	PC194
CHECK ENGINE	PC194
CMTC/TRAVELER	04798364
CRUISE	PC194
CUP HOLDER/ASH RECEIVER	PC37
DOOR COURTESY LAMP	168
ENGINE TEMPERATURE	RED LED
FLOOR CONSOLE COURTESY LAMP	906
FRONT FOG LAMPS	PC161
HIGH BEAM	PC194
ILLUMINATION - CLUSTER NON-ELECTROLUMINESCENT	PC194
LEFT TURN SIGNAL	PC194
LOW FUEL	AMBER LED
OIL PRESSURE	PC194
MAP LIGHT	212
READING LAMP	906
RIGHT TURN SIGNAL	PC194
SEAT BELT	RED LED
SECURITY	RED LED
TRACTION CONTROL	PC161
TRUNK LAMP	912

LAMPS/LIGHTING - INTERIOR (Continued)

BULB APPLICATION TABLE - EXPORT

LAMP	BULB
CLIMATE CONTROL LAMP	203
GLOW PLUG	PC161
MAP LIGHT	TS214-2
REAR FOG LAMPS	PC161
TRUNK LAMP	912

CLUSTER ILLUMINATION AND WARNING LAMPS

REMOVAL

(1) Remove the Instrument Cluster (Refer to 8 - ELECTRICAL/INSTRUMENT CLUSTER - REMOVAL).

(2) Turn over the cluster and expose the illumination bulbs or warning indicator bulbs/socketed LED's by removing the cluster cardboard back cover (Fig. 1).

(3) After identifying the defective bulb or LED, twist it out of the cluster using a counterclockwise motion.

INSTALLATION

(1) Install the new bulb/LED socket into the cluster (Fig. 1) using a clockwise motion.

(2) Install the cluster cardboard back cover.

(3) Install the Instrument Cluster (Refer to 8 - ELECTRICAL/INSTRUMENT CLUSTER - INSTALLATION).

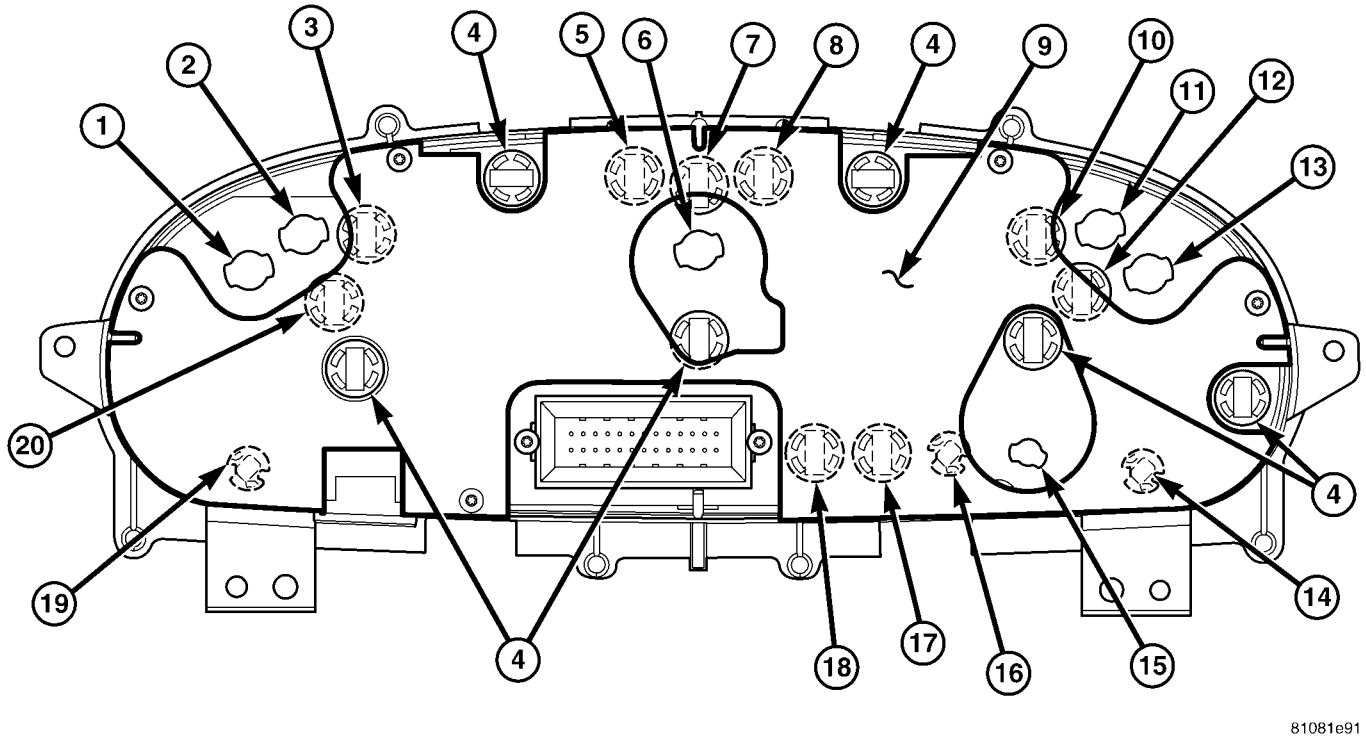

Fig. 1 CLUSTER ILLUMINATION LAMPS

1 - REAR FOG
2 - FRONT FOG
3 - CHARGING SYSTEM
4 - ILLUMINATION - NON ELECTRO-LUMINESCENT ONLY
5 - RIGHT TURN
6 - ABS
7 - HIGH BEAM
8 - LEFT TURN
9 - CLUSTER BACK COVER
10 - AIRBAG
11 - TRACTION CONTROL
12 - CRUISE
13 - NOT USED
14 - LOW FUEL
15 - SECURITY
16 - SEAT BELT
17 - BRAKE
18 - OIL PRESSURE
19 - HIGH ENGINE TEMP
20 - CHECK ENGINE

COMPAPSS MINI TRIP COMPUTER/TRAVELER ILLUMINATION LAMP

REMOVAL

(1) Remove the CMTC/Traveler from the instrument panel. Refer to Body, Instrument Panel, Compass Mini-Trip Computer, Removal.

(2) With the CMTC removed from the cluster bezel, remove the tape from the lamp access opening at the bottom of the CMTC/Traveler.

(3) With a screwdriver, twist the bulb assembly 1/4 turn counterclockwise. Remove bulb and replace.

INSTALLATION

(1) With a screwdriver, twist the bulb 1/4 turn clockwise.

(2) Install the tape to the access opening at the bottom of the CMTC/Traveler to prevent any light leaking.

(3) Install the CMTC/Traveler. Refer to Body, Instrument Panel, Compass Mini-Trip Computer, Installation.

CONSOLE COURTESY LAMP - JR27 ONLY

REMOVAL

(1) Disconnect and isolate the battery negative cable.

(2) Using a flat bladed tool, gently pry lamp from console (Fig. 2).

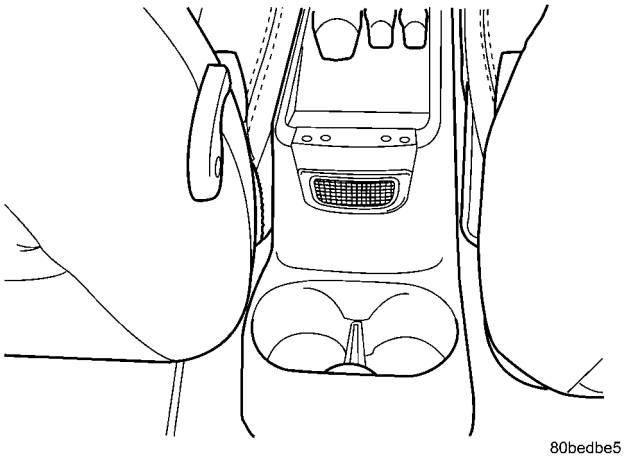

Fig. 2 CONSOLE COURTESY LAMP

(3) Disconnect wire harness connector.

(4) Remove bulb from lamp.

INSTALLATION

(1) Install bulb to lamp.

(2) Connect the wire harness connector.

(3) Press lamp into the center console.

(4) Connect the battery negative cable.

DOME LAMP

REMOVAL

(1) Disconnect and isolate battery negative cable.

(2) From the left side of the vehicle insert a flat bladed pry tool under the lens (Fig. 3).

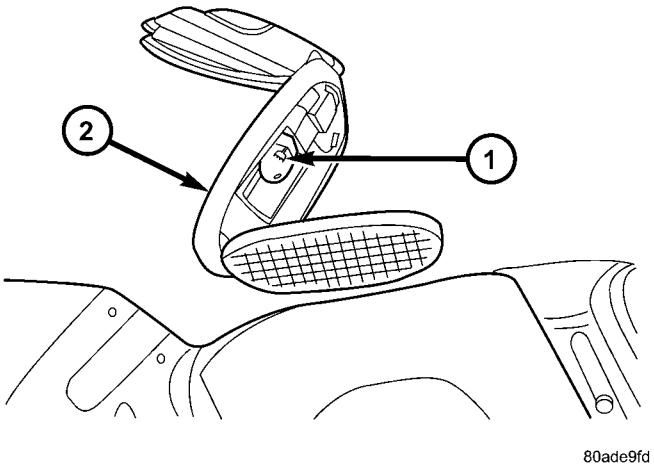

Fig. 3 DOME LAMP

1 - DOME LAMP BULB
2 - DOME LAMP

(3) Separate lamp from headliner.

(4) Disconnect wire harness connector.

INSTALLATION

(1) Connect wire connector to dome lamp.

(2) Center dome lamp in headlining opening.

(3) Push upward on dome lamp to engage it to the headliner.

(4) Connect battery negative cable.

DOME LAMP BULB

REMOVAL

(1) Disconnect and isolate battery negative cable.

(2) From the left side of the vehicle, insert a flat bladed pry tool under the lens.

(3) Remove bulb.

INSTALLATION

(1) Insert bulb into lamp.

(2) Push lens into place.

(3) Connect battery negative cable.

DOOR COURTESY LAMP - JR27 ONLY

REMOVAL

(1) Disconnect and isolate the battery negative cable.
(2) Using a flat bladed tool, gently pry the lamp from the door trim panel.
(3) Disconnect the wire harness connector.
(4) Remove bulb.

INSTALLATION

(1) Install bulb to the lamp.
(2) Connect the wire harness connector.
(3) Press the lamp into the door trim panel.
(4) Connect the battery negative cable.

ILLUMINATED ENTRY

DESCRIPTION

The Illuminated Entry System is available on vehicles equipped with the Remote Keyless Entry system. The Illuminated Entry System turns ON the courtesy lamps when the remote keyless entry system is activated. The Remote Keyless Entry Module and the Body Controller are used to control the system. Courtesy lamps will turn on for 30 seconds (±1 second) and fade to OFF over a five second period.

The Illuminated Entry System also turns ON the courtesy lamps when door is opened. The courtesy lamps will remain ON while the door is open, then fade to OFF 30 seconds (±1 second) after the last door is closed.

The courtesy lamps will fade to OFF immediately when the ignition is switched to ON.

The Illuminated Entry System cannot be activated during the 30 second (±1 second) period after the ignition switch is turned OFF. After a door is opened and closed during this 30 second period, the system will function as previously described.

When the battery voltage has been interrupted to the Illuminated Entry System, the system will not function until the remote keyless entry UNLOCK is actuated.

DIAGNOSIS AND TESTING - ILLUMINATED ENTRY

When testing the system, all doors must be closed to prevent courtesy lamps from lighting. Verify that remote keyless entry system is operating properly before testing illuminated entry circuits. The body controller uses input from the remote keyless entry system to switch ON the courtesy lamps.

Refer to the appropriate wiring information. The wiring information includes wiring diagrams, proper wire and connector repair procedures, details of wire harness routing and retention, connector pin-out information and location views for the various wire harness connectors, splices and grounds.

READING LAMP

REMOVAL

(1) Disconnect and isolate battery negative cable.
(2) Using a trim stick, pry lamp from headliner (Fig. 4).

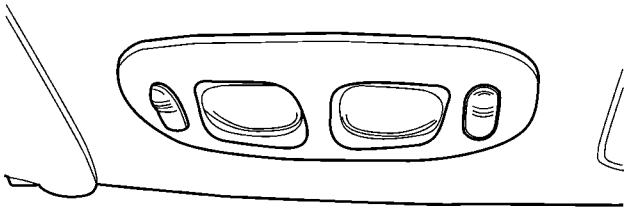

Fig. 4 READING LAMP

(3) Disconnect wire harness connector.
(4) Pull bulb socket from lamp.
(5) Pull bulb from socket.

INSTALLATION

(1) Push bulb into socket.
(2) Install bulb socket to lamp.
(3) Install wire harness connector.
(4) Install reading lamp to headliner.
(5) Connect battery negative cable.

TRANSMISSION RANGE INDICATOR ILLUMINATION

REMOVAL

(1) Remove gear shift knob.

(2) Using a plastic trim stick, Special Tool C-4755, disengage the forward or rear edge of transmission range indicator bezel from floor console.

(3) Pull upward carefully on transmission range indicator bezel and disengage tabs from rear floor console bezel.

(4) Disconnect wire connector to lamp assembly.

(5) Remove transmission range indicator bezel and lamp assembly from vehicle.

INSTALLATION

(1) Position transmission range indicator bezel and lamp assembly to vehicle.

(2) Connect wire connector to lamp assembly.

(3) Engage tabs on transmission range indicator bezel to slots in rear floor console bezel.

(4) Push downward on transmission range indicator bezel to engage to bezel to floor console.

VANITY LAMP

REMOVAL

The vanity lamp is incorporated into the visor assembly. If the vanity lamp needs to be replaced, the entire visor must be replaced. The bulbs are serviced separately.

(1) Disconnect and isolate the battery negative cable.

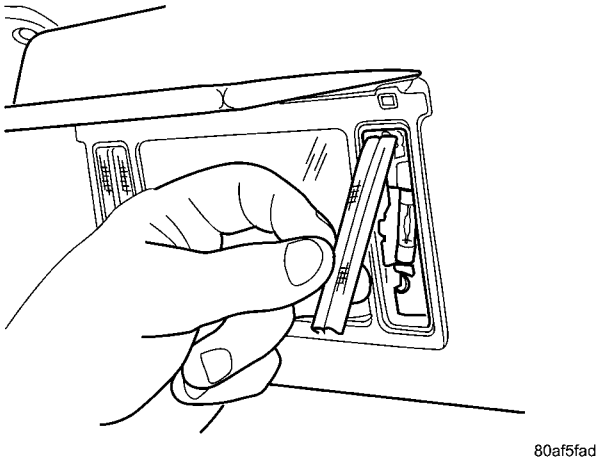

Fig. 5 VANITY LAMP

(2) Using a pick or other suitable tool, pry the lens from the lamp (Fig. 5).

(3) Remove bulb.

INSTALLATION

(1) Install bulb.

(2) Snap lamp lens into position.

(3) Connect the battery negative cable.

MESSAGE SYSTEMS

TABLE OF CONTENTS

page

COMPASS/MINI-TRIP COMPUTER 1
UNIVERSAL TRANSMITTER 4

COMPASS/MINI-TRIP COMPUTER

TABLE OF CONTENTS

page

COMPASS/MINI-TRIP COMPUTER
DESCRIPTION 1
OPERATION 1
DIAGNOSIS AND TESTING - COMPASS MINI-TRIP COMPUTER 2
REMOVAL 2
INSTALLATION 3

COMPASS/MINI-TRIP COMPUTER

DESCRIPTION

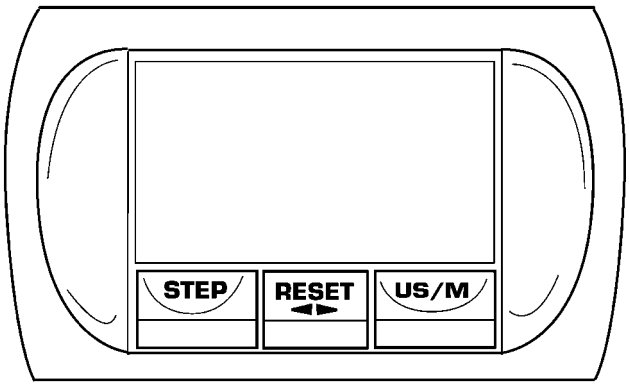

Fig. 1 Compass/Mini-Trip Computer

The Compass Mini-Trip Computer (CMTC) system is located in the center of the instrument panel, between the HVAC outlets. The Compass Mini-Trip Computer is an electronic control module with a vacuum fluorescent display and two function buttons (Fig. 1). The Compass Mini-Trip Computer communicates on the Programmable Communication Interface (PCI) Data Bus Circuit.

The functions that are available via activation of the STEP button are as follows:

- Compass and Temperature
- Average Fuel Economy
- Distance to Empty
- Instantaneous Fuel Economy
- Trip Odometer
- Elapsed Time
- Blank Screen

The Compass Mini-Trip Computer cannot be repaired and, if faulty or damaged it must be replaced. The incandescent lamp for the STEP and US/METRIC button illumination is serviceable. Consult your Mopar® Parts Catalog for a specific part number.

OPERATION

Actuation of the STEP button will cause the Compass Mini-Trip Computer to change mode of operation and actuation of the US/M button will toggle between English and Metric unit of measurement. A reset of the trip computer information is accomplished by actuating the Step and US/M buttons simultaneously. To reset only the trip condition currently displayed, press and release the STEP and US/M buttons simultaneously for one second until a chime sounds. To reset all trip conditions, hold down the STEP and US/M buttons simultaneously (about 2 seconds) until a second chime sounds and then release the buttons.

COMPASS/MINI-TRIP COMPUTER (Continued)

The Compass Mini-Trip Computer is active only when the ignition switch is in the ON position. When the ignition switch is turned ON, the Compass Mini-Trip Computer will return to the last function screen that was displayed prior to the ignition being turned OFF.

COMPASS MINI-TRIP COMPUTER MESSAGES

The Compass Mini-Trip Computer will not display information for any of the screens for which it did not receive the proper data over the Programmable Communication Interface (PCI) data bus for that particular screen. Refer to Mini Trip Computer Diagnosis and Testing in this section for more information.

The Compass Mini-Trip Computer receives the following messages from the Body Control Module (BCM):

- Verification of US/M Status
- Display Brightness (Dimming) and Lamp Status
- Trip Odometer Data
- Elapsed Ignition On Time Data
- Fuel Efficiency (Average and Instantaneous)
- Distance to Empty
- Outside Temperature

The Compass Mini-Trip Computer transmits the following messages to the Body Control Module (BCM):

- Status Request : Beep, Reset, US/M Toggle
- Current Display
- Compass Heading

The Compass Mini-Trip Computer receives the following message from the Single Board Engine Controller (SBEC):

- Vehicle Speed

DIAGNOSIS AND TESTING - COMPASS MINI-TRIP COMPUTER

The Compass Mini-Trip Computer is capable of performing a diagnostic self check on many of its internal functions. Compass Mini-Trip Computer diagnostics may be performed using a DRB lll® scan tool and the proper Body Diagnostic Procedures Manual or by the following procedure.

(1) With the ignition switch in the OFF position, press both the US/M and STEP button.

(2) Turn ignition switch to the ON position.

The Compass Mini-Trip Computer will perform internal checks while lighting all segments of the vacuum florescent display. Upon completion of the internal check, the Compass Mini-Trip Computer will display one of five messages;

- **PASS** - Passed Self Test
- **FAIL** - Failed Self Test
- **BUS** - Not receiving PCI Data Bus messages from Single Board Engine Controller (SBEC) and Body Control Module (BCM)
- **bus1** - Not receiving PCI Data Bus messages from Single Board Engine Controller (SBEC)
- **bus2** - Not receiving PCI Data Bus messages from Body Control Module (BCM)

If any segment of the Compass Mini-Trip Computer fails to light replace the computer.

If FAIL is displayed, repeat the test. If it still fails, replace the Compass Mini-Trip Computer module.

If a BUS(X) message is displayed, check the corresponding PCI Data Bus Circuit for proper operation. Refer to the appropriate diagnostic manual for additional diagnostics.

COMPASS CALIBRATION

If the “CAL” indicator is lit, the compass should be calibrated. The vehicle will be shipped with the “CAL” light on. If during normal driving, the compass appears to be inaccurate, calibration may be required.

To Calibrate the Compass

(1) Put the CMTC into COMPASS/TEMP mode using the STEP button.

(2) Depress the STEP and US/M buttons simultaneously until CAL appears in the display.

(3) Drive the vehicle in about two circles (Fig. 2) on a level surface in an area free of large metal objects, such as other vehicles, large buildings, bridges, underground cables, railroad tracks, etc.

NOTE: The compass will usually calibrate after the vehicle has been driven in a circle comprising five quadrants or one and a quarter turns.

When the “CAL” indicator goes off, the compass is calibrated and should display correct headings (for all conditions). Verify proper calibration by checking North (N), South (S), East (E), and West (W). If the compass does not appear accurate, repeat the calibration procedure in another area.

VARIANCE SETTING PROCEDURE

Variance is the difference between magnetic North and geographic North.

(1) Depress the STEP and US/M buttons simultaneously until VAR appears in the display, then release the buttons.

(2) The CMTC will display the current variance zone (1-15). If the variance needs to be changed use the STEP button to select the correct zone number from the figure below (Fig. 3). After selecting the desired variance zone, the CMTC will return to normal operation after 5 seconds or by pressing the STEP and US/M buttons simultaneously.

REMOVAL

(1) Disconnect and isolate the battery negative remote cable.

COMPASS/MINI-TRIP COMPUTER (Continued)

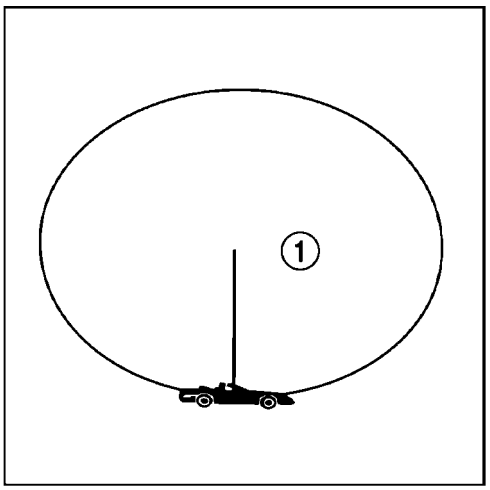

80b9a4bf

Fig. 2 Compass Calibration

1 - Radius = 15′– 45′ and Speed = 7–10 mph

(2) Remove the Instrument Cluster Bezel from the vehicle (Refer to 23 - BODY/INSTRUMENT PANEL/ CLUSTER BEZEL - REMOVAL).

(3) With the cluster bezel removed, remove the two screws attaching the Compass Mini-Trip Computer (Traveler) Module to the cluster bezel (Fig. 4).

(4) Unsnap the retaining clip (Fig. 4) and remove Compass Mini-Trip Computer (Traveler) from the cluster bezel.

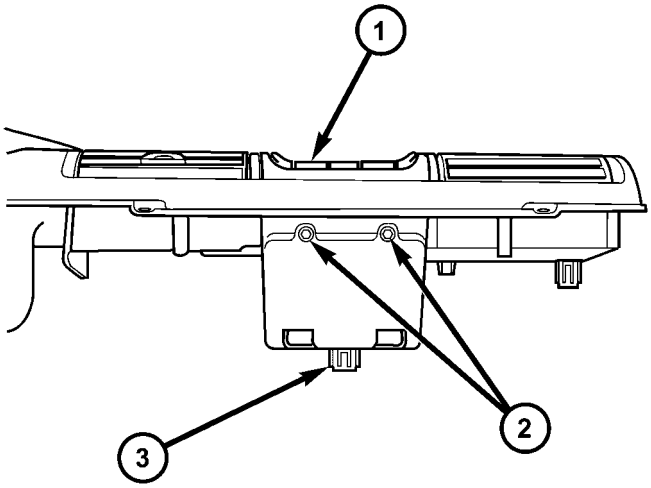

80be7d56

Fig. 4 Compass/Mini-Trip Computer Retaining Screws

1 - COMPASS MINI-TRIP COMPUTER (TRAVELER)
2 - RETAINING SCREWS
3 - RETAINING CLIP

INSTALLATION

(1) Snap the Compass Mini-Trip Computer on the cluster bezel and install the retaining screws.

(2) Install the Instrument Cluster Bezel (Refer to 23 - BODY/INSTRUMENT PANEL/CLUSTER BEZEL - INSTALLATION).

(3) Connect the battery negative remote cable.

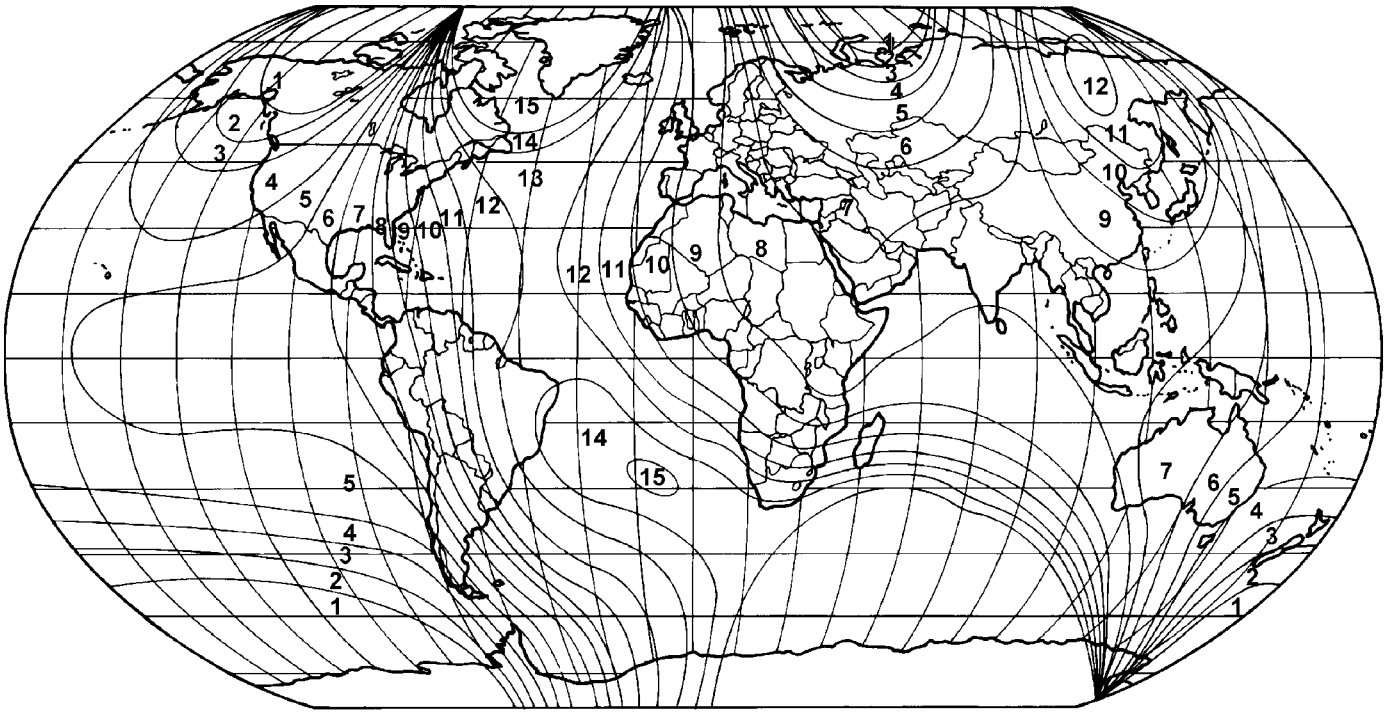

80a13863

Fig. 3 Variance Settings

UNIVERSAL TRANSMITTER

TABLE OF CONTENTS

	page
UNIVERSAL TRANSMITTER	
DESCRIPTION	4
OPERATION	4
DIAGNOSIS AND TESTING - UNIVERSAL TRANSMITTER	4
REMOVAL	4

UNIVERSAL TRANSMITTER

DESCRIPTION

Some JR models are equipped with a Universal Transmitter transceiver as standard factory-installed equipment. The universal transmitter transceiver is located in the drivers side sun visor assembly. The only visible component of the universal transmitter are the three transmitter push buttons. The three universal transmitter push buttons are identified with raised buttons and light indicators so that they can be easily identified by sight or by feel.

Each of the three universal transmitter push buttons controls an independent radio transmitter channel. Each of these three channels can be trained to transmit a different radio frequency signal for the remote operation of garage door openers, motorized gate openers, home or office lighting, security systems or just about any other device that can be equipped with a radio receiver in the 286 to 399 MegaHertz (MHz) frequency range for remote operation. The universal transmitter is capable of operating systems using either rolling code or non-rolling code technology.

The universal transmitter cannot be repaired, and is available for service only as a unit. If any part of the component is faulty or damaged, the complete assembly must be replaced.

OPERATION

The universal transmitter operates on a non-switched source of battery current so the unit will remain functional, regardless of the ignition switch position. For more information on the features, programming procedures and operation of the universal transmitter, see the owner's manual in the vehicle glove box.

DIAGNOSIS AND TESTING - UNIVERSAL TRANSMITTER

If the Universal Transmitter is inoperative, see the owner's manual in the vehicle glove box for instructions on training the universal transmitter. Retrain the universal transmitter with a known good transmitter as instructed in the owner's manual and test the universal transmitter operation again. If the unit is still inoperative, test the universal transmitter with Radio Frequency Detector special tool (Fig. 1) as described below:

(1) Turn the Radio Frequency (RF) Detector ON. A "chirp" will sound and the green power LED will light. If the green LED does not light, replace the battery.

(2) Hold the RF detector within one inch of the TRAINED universal transmitter and press any of the transmitters buttons.

(3) The red signal detection LEDs will light and the tool will beep if a radio signal is detected. Repeat this test three times.

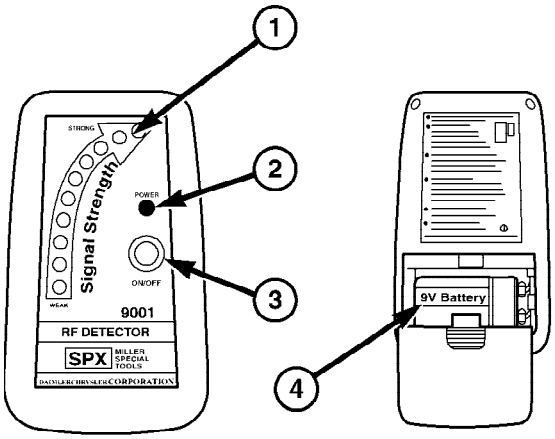

80f230cb

Fig. 1 Radio Frequency Detector

1 - SIGNAL DETECTION LED'S
2 - POWER LED
3 - ON/OFF SWITCH
4 - 9V BATTERY

REMOVAL

(1) For universal transmitter removal, Refer to 23 - BODY/INTERIOR/SUN VISOR - REMOVAL.

POWER SYSTEMS

TABLE OF CONTENTS

page

POWER LOCKS 1
POWER MIRRORS 7
POWER SEAT SYSTEM 10
POWER WINDOWS 17

POWER LOCKS

TABLE OF CONTENTS

page

POWER LOCKS
DESCRIPTION 1
OPERATION 2
DIAGNOSIS AND TESTING - REMOTE KEYLESS ENTRY 3
DOOR CYLINDER LOCK SWITCH
REMOVAL 3
INSTALLATION 4
DOOR LOCK MOTOR
DIAGNOSIS AND TESTING - DOOR LOCK MOTOR 4
DOOR LOCK / UNLOCK SWITCH
DIAGNOSIS AND TESTING - DOOR LOCK / UNLOCK SWITCH 4
REMOVAL 4
INSTALLATION 4
DECKLID RELEASE SOLENOID
DIAGNOSIS AND TESTING - DECKLID RELEASE SOLENOID 5
REMOVAL 5
INSTALLATION 5
DECKLID RELEASE SWITCH
REMOVAL 5
INSTALLATION 5
KEYLESS ENTRY TRANSMITTER
DIAGNOSIS AND TESTING - KEYLESS ENTRY MODULE 5
STANDARD PROCEDURE - RKE TRANSMITTER PROGRAMMING 5
SPECIFICATIONS
TRANSMITTER 6
REMOTE KEYLESS ENTRY MODULE
REMOVAL 6
INSTALLATION 6

POWER LOCKS

DESCRIPTION

POWER DOOR LOCKS

The power lock system allows all doors to be locked or unlocked electrically by operating the switch on either front door trim panel. The power lock system operates on non-switched battery current supplied through a fuse in the junction block so that the system remains functional, regardless of the ignition switch position.

AUTOMATIC DOOR LOCKS

The system includes an automatic door locking feature actuated by the Body Control Module (BCM). **The vehicle is built with the system enabled.** The system can be enabled/disabled by the customer. Refer to the owner's manual for information.

The BCM will automatically lock all doors when all of the conditions below are met:

- All doors are closed
- The vehicle speed exceeds 15 ± 1 M.P.H.
- The throttle position sensor tip-in is greater than 10 ± 2 degrees

When the system is disabled the door locks will work by use of the door lock switches only. When this system is enabled the automatic door locks will work automatically.

POWER LOCKS (Continued)

Auto unlock on exit is a feature which, when enabled, automatically unlocks all doors upon the ignition switch being turned off and the opening of the driver's door. Auto unlock on exit is only operable when the automatic door locks are enabled.

CENTRAL LOCKING

The central locking system is part of the Vehicle Theft Security System. This feature allows the doors to be locked/unlocked all at once with the turn of the key in the drivers door.

CHILD PROTECTION LOCK

The child protection locks are on the rear doors only. When enabled, they render the inside remote door release handles inoperative.

DOOR LOCK INHIBIT

The door lock inhibit feature is designed to prevent the locking of keys in a vehicle. The drivers door cannot be locked unless the keys are removed from the ignition switch.

REMOTE KEYLESS ENTRY

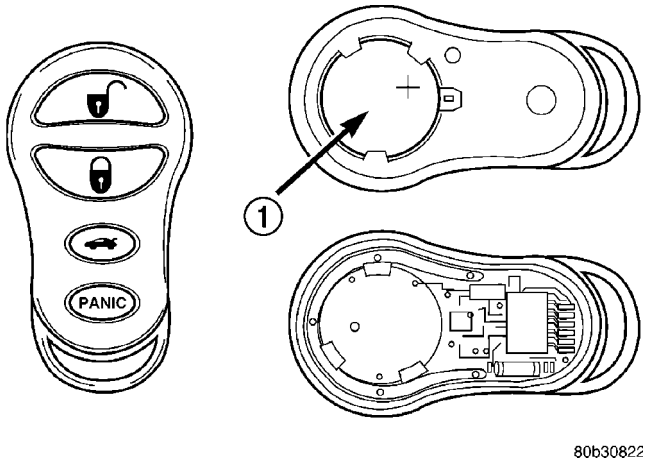

Fig. 1 REMOTE KEYLESS ENTRY TRANSMITTER

1 - BATTERIES

The system allows locking and unlocking of vehicle door(s), deck lid release, and panic by remote control using a hand held radio frequency transmitter (Fig. 1). The vehicle must be in PARK before the trunk lid can be unlatched with the transmitter.

The receiver may receive signals from up to four transmitters. Each transmitter has its own code, and the code is programmed and stored into receiver memory. If a transmitter is replaced or additional transmitters are added, the codes for all units have to be reprogrammed into the receiver memory. If a receiver module is replaced, the transmitter codes must be stored in the new receiver memory.

HORN CHIRP TOGGLE

Once the transmitters have been programmed, the horn chirp can be enabled/disabled by sending the horn chirp toggle operation code to the Body Control Module (BCM).

OPERATION

POWER DOOR LOCKS

All doors can be locked or unlocked electrically by operating the switch on either front door panel.

The rear doors can be locked or unlocked by actuation of the front door switch, or can be locked or unlocked mechanically and independently with their respective locking knobs.

The front doors can be locked or unlocked mechanically with the locking knob regardless of electrical locking and unlocking actuation with the front door knobs.

The right and left front door on all vehicles can be locked or unlocked mechanically from the outside with the key or electrically as described above. The left and right front doors can also be unlocked by actuation of the inside remote door handle.

AUTOMATIC DOOR LOCKS

The BCM controls the power locks when the door lock switch is activated. If the door lock switch is pressed for longer than eight consecutive seconds, the BCM will de-energize the door lock relay.

The automatic door lock system can be enabled/disabled either by the customer or with the DRB III® scan tool. Refer to the DRB III® or the vehicle owners manual for enabling/disabling procedures.

The BCM will automatically re-lock all doors if the above conditions are met and if any of the doors become ajar and then closes again.

The power latches are also equipped with a thermal protection system which prevents the latches from burning out.

CENTRAL LOCKING

Using the key, turn the driver's door cylinder lock to the lock position, all doors will lock. This feature operates differently on each door. Turn key in the driver's door to the unlock position once will unlock driver's door only. Turning the key a second time to the unlock position within five seconds of the first time will unlock all doors.

The lock/unlock operation will arm/disarm the Vehicle Theft Security System and will also activate/cancel the illuminated entry feature.

CHILD PROTECTION LOCK

The lock when engaged, will disable the inside door handle from opening the door. The lock is part of the

POWER LOCKS (Continued)

latch/lock assembly. The lock is engaged by moving a lever that is located on the rearward inside edge of the door.

DOOR LOCK INHIBIT

With the key in the ignition switch in the ON or OFF position and the driver's door open the BCM will ignore the command to lock the power door locks. Once the key is removed, or the driver's door is closed, the body control module will allow the power door locks to lock.

REMOTE KEYLESS ENTRY

The transmitter has four buttons for operation. They are LOCK, UNLOCK, DECK LID RELEASE, and PANIC.

- The **UNLOCK** button will unlock the driver's door and enable illuminated entry. Pushing and releasing the button once will unlock the driver's door. Pushing and releasing the button two times, within a five second interval, will unlock all doors.The unlock sequence can be toggled between driver door first and all door unlock functions.
- Upon pressing the **LOCK** button, the horn will sound a short CHIRP (if enabled) and flash the park lamps to notify that the all door lock signal was received and set. Illuminated entry is cancelled and the interior lamps are faded to off.
- **DECK LID RELEASE** - The Deck Lid release button changes from a default "press twice" actuation to a "press and hold" (for approximately one third of a second) default. Note that this is customer programmable to "no delay" if so desired.
- Pushing and holding the **PANIC** button will cause the panic alarm to sound for three minutes, until the panic button is pressed and held a second time, or the vehicle reaches a speed of 15 mph.

The receiver is capable of retaining a Vehicle Access Code (VAC) even when power is removed.

Each Remote Keyless Entry (RKE) module must have at least one and no more than four transmitters.

HORN CHIRP TOGGLE

This can be done using a DRB III® scan tool or by the customer. The horn chirp will enter the opposite state of its current programmed state by receiving this operation code. The BCM is responsible for keeping track of the horn chirp status.

DIAGNOSIS AND TESTING - REMOTE KEYLESS ENTRY

When trouble shooting problems with the Remote Keyless Entry System, always verify that the power door lock/unlock switches are functional. If the doors do not lock/unlock with the power switches, the following components should be analyzed:

- Door Lock Switches
- Body Control Module
- Lock and unlock relays
- Door lock/unlock motors
- Remote keyless entry system
- Radio/clock

A blown fuse is the probable cause. The remote keyless entry fuse 13 is located in the Junction Block. If neither terminal measures battery voltage, check for an open or shorted circuit to the Junction Block, repair as needed. If battery voltage is still not available, check the high current fuse G in the Power Distribution Center, located in the engine compartment.

To diagnose the Remote Keyless Entry (RKE) System, use a DRB III® scan tool and refer to Power Door Lock System in the proper Body Diagnostic Procedures manual.

DOOR CYLINDER LOCK SWITCH

REMOVAL

(1) Disconnect and isolate the battery negative cable.

(2) Remove door trim panel (Refer to 23 - BODY/DOOR - FRONT/TRIM PANEL - REMOVAL).

(3) Disconnect the wiring clip and pigtail wire connector (Fig. 2).

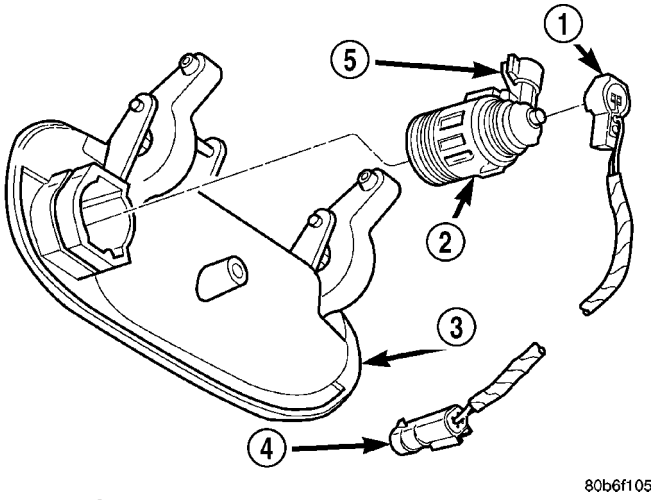

Fig. 2 DOOR CYLINDER LOCK SWITCH

1 - DOOR CYLINDER LOCK SWITCH
2 - LOCK CYLINDER
3 - DOOR HANDLE
4 - PIGTAIL CONNECTOR
5 - CLIP

(4) Remove the Door Cylinder Lock Switch from door lock cylinder.

DOOR CYLINDER LOCK SWITCH (Continued)

INSTALLATION

(1) Install the Door Cylinder Lock Switch onto the door lock cylinder.

(2) Connect the wiring clip and pigtail wire connector.

(3) Install door trim panel (Refer to 23 - BODY/ DOOR - FRONT/TRIM PANEL - INSTALLATION).

(4) Connect the battery negative cable.

DOOR LOCK MOTOR

DIAGNOSIS AND TESTING - DOOR LOCK MOTOR

Make certain battery is in normal condition before circuits are tested.

To determine which motor is faulty, check each individual door for electrical lock and unlock or disconnect the motor connectors one at a time, while operating the door lock switch. In the event that none of the motors work, the problem maybe caused by a shorted motor, a bad switch, or a bad relay. Disconnecting a defective motor will allow the others to work.

To test an individual door lock motor, disconnect the electrical connector from the motor. To lock the door, connect a 12 volt power source to the positive pin of the lock motor and a ground wire to the other pin (Fig. 3). To unlock the door reverse the wire connections at the motor pin terminals. If these results are NOT obtained, replace the motor.

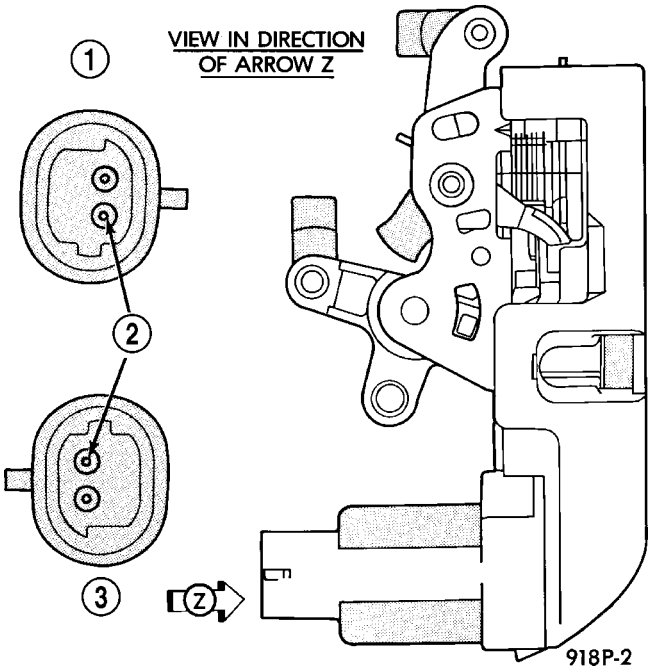

Fig. 3 DOOR LOCK MOTOR - TYPICAL

1 - PASSENGER SIDE CONNECTOR
2 - + TO LOCK
3 - DRIVER SIDE CONNECTOR

The door lock motor is integral to the door latch. If found defective, the entire door latch must be replaced.

DOOR LOCK / UNLOCK SWITCH

DIAGNOSIS AND TESTING - DOOR LOCK / UNLOCK SWITCH

VOLTAGE

The following wiring test sequence determines whether or not voltage is continuous through the body harness to switch.

(1) Remove switch from door trim panel.

(2) Carefully separate multiple terminal block on wiring harness from switch body.

(3) Connect one lead of test light to a ground terminal:

- Touch other test light lead to battery feed B+ terminal.
- If test light comes on, the wiring circuit between the battery and switch is functional.
- If test light does not come on, check fuse 13 in the Junction Block for a blown fuse. Refer to Wiring Diagrams for circuit information.

DOOR LOCK SWITCH

Remove the switch from its mounting location. Using an ohmmeter, refer to the DOOR LOCK SWITCH CONTINUITY table to determine if the continuity is correct in the LOCK and UNLOCK switch positions. If these results are not obtained, replace the switch.

DOOR LOCK SWITCH CONTINUITY

SWITCH POSITION	CONTINUITY BETWEEN	RESISTANCE VALUE
LOCK	1 AND 4	2700 Ω ± 10%
UNLOCK	1 AND 4	620 Ω ± 10%

REMOVAL

(1) Disconnect and isolate the battery negative remote cable.

(2) Remove door trim panel (Refer to 23 - BODY/ DOOR - FRONT/TRIM PANEL - REMOVAL).

(3) Disconnect switch wire connector.

(4) Remove switch using a trim stick (special tool #C-4755) or equivalent.

INSTALLATION

(1) Install the switch by snapping into place.

(2) Connect switch wire connector.

DOOR LOCK / UNLOCK SWITCH (Continued)

(3) Install the door trim panel (Refer to 23 - BODY/DOOR - FRONT/TRIM PANEL - INSTALLATION).

(4) Connect the battery negative remote cable.

DECKLID RELEASE SOLENOID

DIAGNOSIS AND TESTING - DECKLID RELEASE SOLENOID

(1) Confirm motor lead wire is connected and 10 volts or more are available at solenoid.

(2) Provide proper ground through latch mounting screws.

(3) Remove latch and examine plunger. Plunger should spring back when pressed.

(4) Insure that solenoid plunger travel is adequate approximately 16 mm (5/8 inch).

REMOVAL

(1) Disconnect and isolate the negative battery cable remote terminal from the remote battery post.

(2) Raise deck lid to the full up position.

(3) Remove latch cover push pins then remove cover.

(4) Remove two retaining nuts to latch and motor, then remove latch and motor assembly.

INSTALLATION

(1) Install the latch and motor assembly. Install the two retaining nuts.

(2) Install latch cover and push pins.

(3) Close the deck lid.

(4) Connect the negative battery cable remote terminal to the remote battery post.

DECKLID RELEASE SWITCH

REMOVAL

(1) Disconnect and isolate the battery negative cable.

(2) Remove left lower instrument panel cover.

(3) Disconnect the wire connector.

(4) Pinch four tabs around side of decklid release switch on the rear side of the left lower instrument panel trim, and push switch through opening.

INSTALLATION

(1) Position the decklid release switch over opening of the left lower instrument panel trim, and push switch through opening.

(2) Connect the wire connector.

(3) Install the left lower instrument panel cover.

(4) Connect the battery negative cable.

KEYLESS ENTRY TRANSMITTER

DIAGNOSIS AND TESTING - KEYLESS ENTRY MODULE

Using special tool 9001, first test to ensure that the transmitter is functioning. Typical testing distance is 2.5 centimeters (1 inch) for Asian transmitters and 30.5 centimeters (12 inches) for all others. To test, position the transmitter as shown (Fig. 4). Press any transmitter button, then test each button individually. The tool will beep if a radio signal strength that lights five or more LED's is detected. Repeat this test three times. If transmitter fails any of the test refer to the Diagnostic Procedures manual.

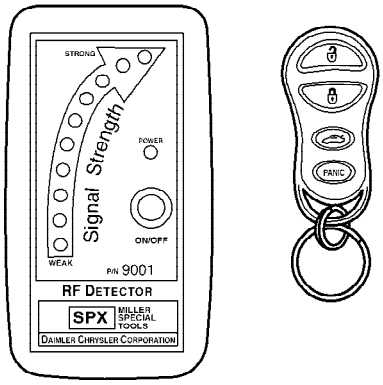

Fig. 4 RKE TRANSMITTER DIAGNOSIS

STANDARD PROCEDURE - RKE TRANSMITTER PROGRAMMING

The Remote Keyless Entry (RKE) Transmitter(s) can be programmed with the use of the DRB III® scan tool, or by the customer.

New Remote Keyless Entry (RKE) transmitters can be programed using the DRBIII® scan tool and the proper Diagnostic Procedures manual, if no functioning transmitter is available. The DRBIII® scan tool can provide confirmation that the PCI data bus is functional, and that all of the electronic modules are sending and receiving the proper messages on the PCI data bus.

The following procedure can be used as long as one functioning transmitter is available:

(1) Turn ignition to the RUN position (allow ignition chimes to stop).

(2) Using any original (working) transmitter, press the UNLOCK button for 4 to 10 seconds.

(3) Within the specified 4 to 10 seconds, continue pressing the UNLOCK button and press the PANIC button for 1 second, and release both buttons. A

KEYLESS ENTRY TRANSMITTER (Continued)

chime will sound to indicate that the transmitter programming mode has been entered (allow 3 seconds for chime to sound).

(4) Press LOCK and UNLOCK buttons simultaneously for 1 second and release.

(5) Press and release any button on the same transmitter and a chime will sound after successfully programming the transmitter.

(6) Repeat steps 5 and 6 to program additional transmitters.

(7) Turn ignition to the OFF position. Transmitter programming mode will discontinue after 60 seconds. All transmitter programming must be completed within time specified.

SPECIFICATIONS

TRANSMITTER

BATTERY

The transmitter has two 3 volt batteries, which can be removed and replaced without special tools. Insert a dime in the side slot of the transmitter and twist. the halves should separate and the batteries are stacked on top of each other. The batteries are available at local retail stores. Recommended batteries are Panasonic CR 2016 or equivalent. Battery life is about two years.

RANGE

Operation range is within 12 meters (40 ft.) of the module/receiver.

REMOTE KEYLESS ENTRY MODULE

REMOVAL

(1) Disconnect the remote battery negative cable from the terminal on the shock tower.

The Junction Block and Body Control Module (BCM) are attached to each other. After removal they can be separated.

(2) Open the front driver's door and remove end cap.

(3) Remove instrument panel outboard bezel (Refer to 23 - BODY/INSTRUMENT PANEL/INSTRUMENT PANEL TRIM - REMOVAL).

(4) Remove instrument panel center bezel (Refer to 23 - BODY/INSTRUMENT PANEL/INSTRUMENT PANEL CENTER BEZEL - REMOVAL).

(5) Remove instrument panel inboard bezel (Refer to 23 - BODY/INSTRUMENT PANEL/INSTRUMENT PANEL TRIM - REMOVAL).

(6) Remove the left lower instrument panel trim.

(7) Remove silencer.

(8) Remove wire harness connectors from Junction Block.

(9) Remove Junction Block three mounting screws.

(10) Remove Junction Block/BCM by pulling straight down from the mounting bayonet.

(11) Disconnect BCM wire connectors and remove the assembly.

(12) Remove Junction Block/BCM from vehicle.

(13) With the Junction Block/BCM removed from the vehicle, separate the BCM from the Junction Block.

(14) Disconnect BCM from the Junction Block.

(15) Unsnap the remote keyless entry module from the BCM.

NOTE: The Remote Keyless Entry (RKE) module is attached to the BCM. This must be transferred (if equipped) to the new BCM if being replaced.

NOTE: If BCM is replaced, the VTSS must be enabled in the new BCM via the DRB III® in order to start the vehicle.

INSTALLATION

(1) Snap the remote keyless entry module onto the BCM.

(2) Connect BCM to the Junction Block.

(3) Connect the BCM and junction block together.

(4) Install the Junction Block/BCM into vehicle.

(5) Connect BCM wire connectors and install the assembly onto instrument panel.

(6) Install the Junction Block/BCM by pushing straight up.

(7) Install the Junction Block three mounting screws.

(8) Install the wire harness connectors to the Junction Block.

(9) Install the silencer.

(10) Install the left lower instrument panel trim.

(11) Install the instrument panel inboard bezel (Refer to 23 - BODY/INSTRUMENT PANEL/INSTRUMENT PANEL TRIM - INSTALLATION).

(12) Install the instrument panel center bezel (Refer to 23 - BODY/INSTRUMENT PANEL/INSTRUMENT PANEL CENTER BEZEL - INSTALLATION).

(13) Install the instrument panel outboard bezel (Refer to 23 - BODY/INSTRUMENT PANEL/INSTRUMENT PANEL TRIM - INSTALLATION).

(14) Install the left end cover.

(15) Connect the remote battery negative cable to the remote terminal on the shock tower.

POWER MIRRORS

TABLE OF CONTENTS

page

POWER MIRRORS
DESCRIPTION 7
OPERATION 7
DIAGNOSIS AND TESTING - POWER MIRRORS 7
AUTOMATIC DAY / NIGHT MIRROR
DESCRIPTION 8
OPERATION 8
DIAGNOSIS AND TESTING - AUTOMATIC DAY/NIGHT INSIDE MIRROR 8

page

POWER MIRROR SWITCH
DIAGNOSIS AND TESTING - POWER MIRROR SWITCH 9
REMOVAL 9
INSTALLATION 9
SIDEVIEW MIRROR
REMOVAL 9

POWER MIRRORS

DESCRIPTION

AUTOMATIC DAY/NIGHT MIRROR

The automatic day/night mirror system is able to automatically change the reflectance of the inside rear view mirror in order to reduce the glare of headlamps approaching the vehicle from the rear. The automatic day/night rear view mirror receives battery current through a fuse in the junction block only when the ignition switch is in the ON position.

OUTSIDE REAR VIEW MIRROR

The power operated outside rear view mirrors allow the driver to adjust both outside mirrors electrically from the driver side front seat position by operating a switch on the instrument panel to the left of the steering column.

OPERATION

AUTOMATIC DAY/NIGHT MIRROR

A switch located on the bottom of the automatic day/night mirror housing allows the vehicle operator to select whether the automatic dimming feature is operational. When the automatic day/night mirror is turned on, the mirror switch is lighted by an integral Light-Emitting Diode (LED). The mirror will automatically disable its self-dimming feature whenever the vehicle is being driven in reverse.

Refer to the owner's manual for more information on the features, use and operation of the automatic day/night mirror system.

OUTSIDE REAR VIEW MIRROR

The power mirrors receive a non-switched battery feed through a fuse in the junction block so that the system will remain operational, regardless of the ignition switch position.

DIAGNOSIS AND TESTING - POWER MIRRORS

(1) Disconnect and isolate the battery negative cable.

(2) Remove the power mirror switch. (Refer to 8 - ELECTRICAL/POWER MIRRORS/POWER MIRROR SWITCH - REMOVAL).

(3) Disconnect wire connector from the switch.

(4) Using two jumper wires, one connected to a 12 volt battery source, and the other connected to a good body ground. Refer to the Mirror Motor Test table for appropriate mirror response, using the mirror switch wiring harness connector (Fig. 1).

(5) If test results are not obtained as shown in the Mirror Motor Test table, check for open or shorted circuit, or replace mirror assembly as necessary.

If mirror motor tests OK, go to Mirror Switch Test.

MIRROR MOTOR TEST

		MIRROR REACTION	
12 VOLT	**GROUND**	**LEFT**	**RIGHT**
9	10		UP
4	1	UP	
10	9		DOWN
1	4	DOWN	
10	2		RIGHT
1	8	RIGHT	
2	10		LEFT
8	1	LEFT	

POWER MIRRORS (Continued)

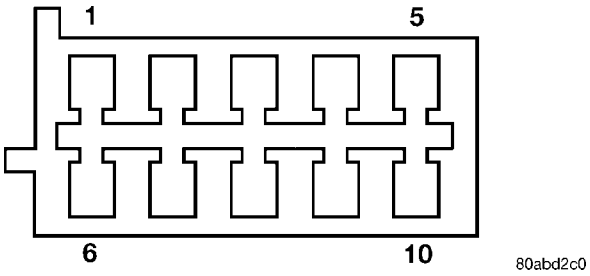

Fig. 1 MIRROR SWITCH HARNESS CONNECTOR

AUTOMATIC DAY / NIGHT MIRROR

DESCRIPTION

The automatic day/night mirror uses a thin layer of electrochromic material between two pieces of conductive glass to make up the face of the mirror. When the mirror switch is in the On position, two photocell sensors are used by the mirror circuitry to monitor external light levels and adjust the reflectance of the mirror.

OPERATION

The ambient photocell sensor is located on the forward-facing (windshield side) of the rear view mirror housing, and detects the ambient light levels outside of the vehicle. The headlamp photocell sensor is located inside the rear view mirror housing behind the mirror glass and faces rearward, to detect the level of the light being received at the rear window side of the mirror. When the circuitry of the automatic day/night mirror detects that the difference between the two light levels is too great (the light level received at the rear of the mirror is much higher than that at the front of the mirror), it begins to darken the mirror.

The automatic day/night mirror circuitry also monitors the transmission using an input from the backup lamp circuit. The mirror circuitry is programmed to automatically disable its self-dimming feature whenever it senses that the transmission backup lamp circuit is energized.

The automatic day/night mirror is a completely self-contained unit and cannot be repaired. If faulty or damaged, the entire mirror assembly must be replaced.

DIAGNOSIS AND TESTING - AUTOMATIC DAY/NIGHT INSIDE MIRROR

For complete circuit diagrams, refer to the appropriate wiring information. The wiring information includes wiring diagrams, proper wire and connector repair procedures, details of wire harness routing and retention, connector pin-out information and location views for the various wire harness connectors, splices and grounds.

(1) Check the fuse in the junction block. If OK, go to Step 2. If not OK, repair the shorted circuit or component as required and replace the faulty fuse.

(2) Turn the ignition switch to the On position. Check for battery voltage at the fuse in the junction block. If OK, go to Step 3. If not OK, repair the open circuit to the ignition switch as required.

(3) Turn the ignition switch to the Off position. Disconnect and isolate the battery negative cable. Unplug the wire harness connector from the automatic day/night mirror. Connect the battery negative cable. Turn the ignition switch to the On position. Check for battery voltage at the fused ignition switch output (run/start) circuit cavity of the automatic day/night mirror wire harness connector. If OK, go to Step 4. If not OK, repair the open circuit to the junction block as required.

(4) Turn the ignition switch to the Off position. Disconnect and isolate the battery negative cable. Check for continuity between the ground circuit cavity of the automatic day/night mirror wire harness connector and a good ground. There should be continuity. If OK, go to Step 5. If not OK, repair the circuit to ground as required.

(5) Connect the battery negative cable. Turn the ignition switch to the On position. Set the parking brake. Place the transmission gear selector lever in the Reverse position. Check for battery voltage at the backup lamp switch output circuit cavity of the automatic day/night mirror wire harness connector. If OK, go to Step 6. If not OK, repair the open circuit as required.

(6) Turn the ignition switch to the Off position. Disconnect the battery negative cable. Plug in the automatic day/night mirror wire harness connector. Connect the battery negative cable. Turn the ignition switch to the On position. Place the transmission gear selector lever in the Neutral position. Place the mirror switch in the On (the LED in the mirror switch is lighted) position. Cover the forward facing ambient photocell sensor to keep out any ambient light.

NOTE: The ambient photocell sensor must be covered completely, so that no light reaches the sensor. Use a finger pressed tightly against the sensor, or cover the sensor completely with electrical tape.

(7) Shine a light into the rearward facing headlamp photocell sensor. The mirror glass should darken. If OK, go to Step 8. If not OK, replace the faulty automatic day/night mirror unit.

(8) With the mirror glass darkened, place the transmission gear selector lever in the Reverse position. The mirror should return to its normal reflectance. If not OK, replace the faulty automatic day/night mirror unit.

POWER MIRROR SWITCH

DIAGNOSIS AND TESTING - POWER MIRROR SWITCH

(1) Remove power mirror switch (Refer to 8 - ELECTRICAL/POWER MIRRORS/POWER MIRROR SWITCH - REMOVAL).

(2) Disconnect wiring harness connector from switch.

(3) Using a ohmmeter, test for continuity between the terminals of the switch (Fig. 2).

(4) If results shown in the table are not obtained, replace the switch.

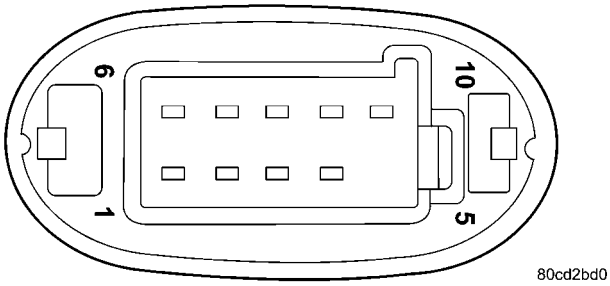

Fig. 2 POWER MIRROR SWITCH

POWER MIRROR SWITCH TEST

SWITCH POSITION	CONTINUITY BETWEEN
MIRROR SELECT SWITCH IN ″LEFT″ POSITION	
UP	3 AND 1
	9 AND 7
	7 AND 4
DOWN	7 AND 1
	9 AND 3
	4 AND 3
LEFT	3 AND 1
	7 AND 2
	8 AND 7
RIGHT	7 AND 1
	3 AND 2
	8 AND 3

SWITCH POSITION	CONTINUITY BETWEEN
MIRROR SELECT SWITCH IN ″RIGHT″ POSITION	
UP	10 AND 3
	9 AND 7
	7 AND 4
DOWN	10 AND 7
	9 AND3
	4 AND 3
LEFT	10AND 3
	7 AND 2
	8 AND 7
RIGHT	10 AND 7
	3 AND 2
	8 AND 3

REMOVAL

(1) Disconnect and isolate the battery negative cable.

(2) Using a trim stick, pry the trim bezel from the instrument panel.

(3) Disconnect wire harness connector from switch.

(4) Remove switch from bezel.

INSTALLATION

(1) Install switch to trim bezel.

(2) Connect wire harness connector to switch.

(3) Install trim bezel to instrument panel.

(4) Connect battery negative cable.

SIDEVIEW MIRROR

REMOVAL

For service procedures, (Refer to 23 - BODY/EXTERIOR/SIDE VIEW MIRROR - REMOVAL).

POWER SEAT SYSTEM

TABLE OF CONTENTS

page

POWER SEAT SYSTEM
DESCRIPTION 10
OPERATION 11
DIAGNOSIS AND TESTING - POWER SEAT SYSTEM 11
DRIVER SEAT SWITCH
DESCRIPTION 11
OPERATION 11
DIAGNOSIS AND TESTING - DRIVER SEAT SWITCH 12
REMOVAL 14
INSTALLATION 14
POWER SEAT TRACK
DESCRIPTION 14
OPERATION 14
DIAGNOSIS AND TESTING - POWER SEAT TRACK 15
REMOVAL 16
INSTALLATION 16

POWER SEAT SYSTEM

DESCRIPTION

The power seat system on this model allows the driver to electrically adjust their seating positions in eight directions for optimum control and comfort, using the power seat switch located on the outboard seat cushion side shield (Fig. 1). The power seat system receives battery current through a 40 amp fuse in the Power Distribution Center (PDC) and a 20 amp circuit breaker in the junction block so that the power seats remain operational, regardless of the ignition switch position.

WARNING: SOME VEHICLES ARE EQUIPPED WITH SIDE AIRBAGS. BEFORE ATTEMPTING TO DIAGNOSE OR SERVICE ANY SEAT OR POWER SEAT SYSTEM COMPONENT YOU MUST FIRST DISCONNECT AND ISOLATE THE BATTERY NEGATIVE CABLE. THEN WAIT TWO MINUTES FOR THE SYSTEM CAPACITOR TO DISCHARGE BEFORE FURTHER SYSTEM SERVICE. THIS IS THE ONLY SURE WAY TO DISABLE THE AIRBAG SYSTEM. FAILURE TO DO SO COULD RESULT IN ACCIDENTAL AIRBAG DEPLOYMENT AND POSSIBLE PERSONAL INJURY.

The power seat system allows the seating position to be adjusted forward, rearward, up, down, front up, front down, rear up, or rear down. A eight-way power seat is standard on premium models and optional on others. This option includes a six-way adjustable seat cushion track and a two-way power seat back. The eight-way power seat is also available with the heated seat system (Export Only). Refer to **Heated Seat System** for more information on the heated seat option. The power seat system includes the following components:

- Power seat switch
- Power seat track.
- Power seat system fuse and circuit breaker

Refer to Wiring Diagrams for complete circuit diagrams. Following are component descriptions, theory of operation and removal and installation procedures for the power seat system components.

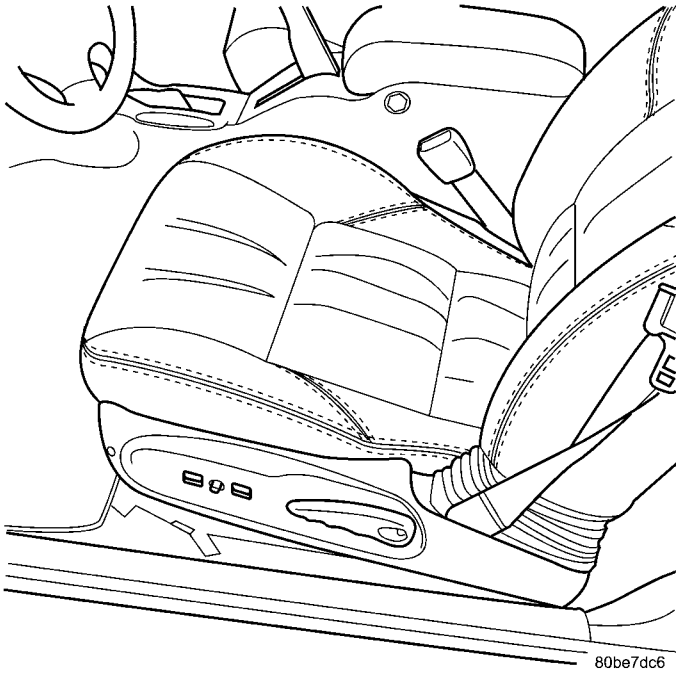

Fig. 1 Driver Power Seat - Convertible

POWER SEAT SYSTEM (Continued)

OPERATION

When a power seat switch control knob or knobs are actuated, a battery feed and a ground path are applied through the switch contacts to the power seat track or recliner adjuster motor. The selected adjuster motor operates to move the seat track or recliner through its drive unit in the selected direction until the switch is released, or until the travel limit of the adjuster is reached. When the switch is moved in the opposite direction, the battery feed and ground path to the motor are reversed through the switch contacts. This causes the adjuster motor to run in the opposite direction.

See the owner's manual in the vehicle glove box for more information on the features, use and operation of the power seat system.

DIAGNOSIS AND TESTING - POWER SEAT SYSTEM

WARNING: SOME VEHICLES ARE EQUIPPED WITH SEAT MOUNTED, SIDE AIRBAGS. BEFORE ATTEMPTING TO DIAGNOSE OR SERVICE ANY SEAT OR POWER SEAT SYSTEM COMPONENT YOU MUST FIRST DISCONNECT AND ISOLATE THE BATTERY NEGATIVE CABLE. THEN WAIT TWO MINUTES FOR THE SYSTEM CAPACITOR TO DISCHARGE BEFORE FURTHER SYSTEM SERVICE. THIS IS THE ONLY SURE WAY TO DISABLE THE AIRBAG SYSTEM. FAILURE TO DO SO COULD RESULT IN ACCIDENTAL AIRBAG DEPLOYMENT AND POSSIBLE PERSONAL INJURY.

Before any testing of the power seat system is attempted, the battery should be fully-charged and all of the power seat system wire harness, connections and pins checked for damage. For complete circuit diagrams, refer to **Wiring Diagrams**.

With the dome lamp on, apply the power seat switch in the direction of the failure. If the dome lamp dims, the seat may be jamming. Check under and behind the seat for binding or obstructions. If the dome lamp does not dim, proceed with testing of the individual components and circuits in the power seat system.

VOLTAGE TEST

The following test will determine whether or not voltage is continuous through the body harness and to the seat switch.

(1) Remove the front seat cushion side shield from the seat to be tested. Refer to the Body section of the service manual for the procedure.

(2) Using a voltmeter, connect the ground lead to Pin 5 and positive lead to Pin 1 of the seat switch connector. If battery voltage is present circuit is OK. If no voltage is present check circuit breaker and repair as necessary.

CIRCUIT BREAKER TEST

Find correct circuit breaker on fuse block. Pull out slightly but be sure that circuit breaker terminals still contact terminals in fuse block. Connect ground wire of voltmeter to a good ground. With probe of voltmeter positive wire, check both terminals of circuit breaker for battery voltage. If only one terminal checks at battery voltage, circuit breaker is defective and must be replaced. If neither terminal shows battery voltage, check for open or shorted circuit to circuit breaker.

DRIVER SEAT SWITCH

DESCRIPTION

Vehicles equipped with power seats utilize a eight-way power seat switch. Hard-top models utilize an power seat switch with two knobs ganged together on the outboard seat cushion side shield. Convertible models utilize an power seat switch with three knobs ganged together. The switches are secured to the back of the seat cushion side shield with two screws. However, the control knobs for the hard-top eight-way power seat switch unit must be removed before the seat switch can be removed from the side shield.

The power seat can be adjusted in eight different ways using either of the power seat switches. The power seat can be adjusted up, down, forward, rearward, front up, front down, rear up and rear down, using either of the power seat switches.

The individual switches in the power seat switch module cannot be repaired. If one switch is damaged or faulty, the entire power seat switch module must be replaced. Refer to the owner's manual in the vehicle glove box for more information on the power seat switch functions and the seat adjusting procedures.

OPERATION

When a power seat switch control knob or knobs are actuated, a battery feed and a ground path are applied through the switch contacts to the power seat track or recliner adjuster motor. The selected adjuster motor operates to move the seat track or recliner through its drive unit in the selected direction until the switch is released, or until the travel limit of the adjuster is reached. When the switch is moved in the opposite direction, the battery feed and ground path to the motor are reversed through the switch contacts. This causes the adjuster motor to run in the opposite direction.

DRIVER SEAT SWITCH (Continued)

No power seat switch should be held applied in any direction after the adjuster has reached its travel limit. The power seat adjuster motors each contain a self-resetting circuit breaker to protect them from overload. However, consecutive or frequent resetting of the circuit breaker must not be allowed to continue, or the motor may be damaged. See the owner's manual in the vehicle glove box for more information on the power seat switch functions and the seat adjusting procedures.

DIAGNOSIS AND TESTING - DRIVER SEAT SWITCH

(1) Remove the power seat switch from its mounting position. Refer to the procedure in this section.

(2) Using an ohmmeter, perform the switch continuity tests. Refer to the appropriate Switch Continuity Test table and the seat switch connector (Fig. 2) or (Fig. 3)below. If there is no continuity in any of the switch positions, replace switch.

HARD-TOP POWER SEAT SWITCH CONTINUITY TEST

SWITCH POSITION	CONTINUITY BETWEEN
OFF	1-2, 1-3, 1-4, 1-6, 1-7, 1-8, 1-9, 1-10
SEATBACK RECLINER UP	5-2, 1-4
SEATBACK RECLINER DOWN	5-4, 1-2
SEAT BACKWARD	5-3, 1-6
SEAT FORWARD	5-6, 1-3
FRONT RISER UP	7-5, 1-10
FRONT RISER DOWN	5-10, 1-7
REAR RISER UP	5-8, 1-9
REAR RISER DOWN	5-9, 1-8

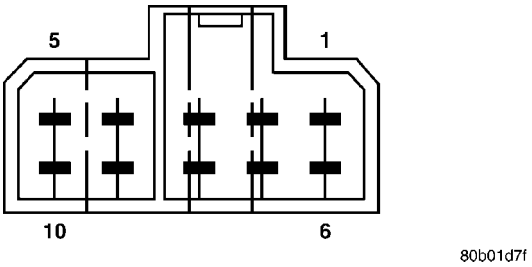

Fig. 2 Rear View Of Hard-top Power Seat Switch

DRIVER SEAT SWITCH (Continued)

CONVERTIBLE POWER SEAT SWITCH CONTINUITY TEST

SWITCH POSITION	CONTINUITY BETWEEN
OFF	ALL TERMINALS EXCEPT ″A″
VERTICAL UP	B-M, B-E, A-N, A-J
VERTICAL DOWN	B-N, B-J, A-M, A-E
HORIZONTAL REARWARD	B-K, A-L
HORIZONTAL FORWARD	B-L, A-K
FRONT TILT UP	A-J, B-E
FRONT TILT DOWN	A-E, B-J
REAR TILT UP	A-N, B-M
REAR TILT DOWN	A-M, B-N

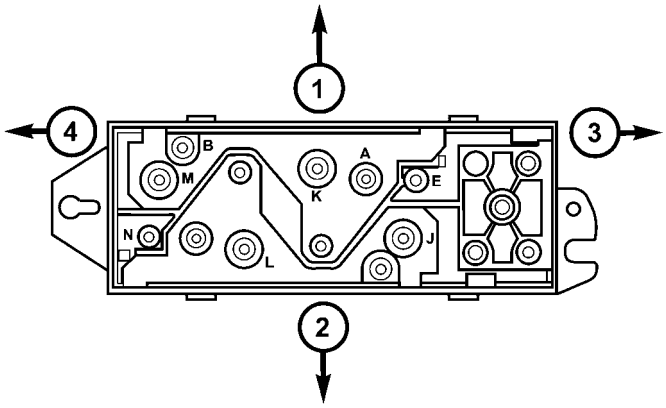

Fig. 3 Rear View Of Convertible Power Seat Switch

1 - UP
2 - DOWN
3 - FRONT
4 - REAR

DRIVER SEAT SWITCH (Continued)

REMOVAL

(1) Open hood, disconnect and isolate the negative battery cable remote terminal from the remote battery post.

WARNING: SOME VEHICLES ARE EQUIPPED WITH SIDE AIRBAGS. BEFORE ATTEMPTING TO DIAGNOSE OR SERVICE ANY SEAT OR POWER SEAT SYSTEM COMPONENT YOU MUST FIRST DISCONNECT AND ISOLATE THE BATTERY NEGATIVE CABLE. THEN WAIT TWO MINUTES FOR THE SYSTEM CAPACITOR TO DISCHARGE BEFORE FURTHER SYSTEM SERVICE. THIS IS THE ONLY SURE WAY TO DISABLE THE AIRBAG SYSTEM. FAILURE TO DO SO COULD RESULT IN ACCIDENTAL AIRBAG DEPLOYMENT AND POSSIBLE PERSONAL INJURY.

(2) Remove the seat cushion side shield from the front seat (Fig. 4). Refer to the Body section of the service manual for the procedure.

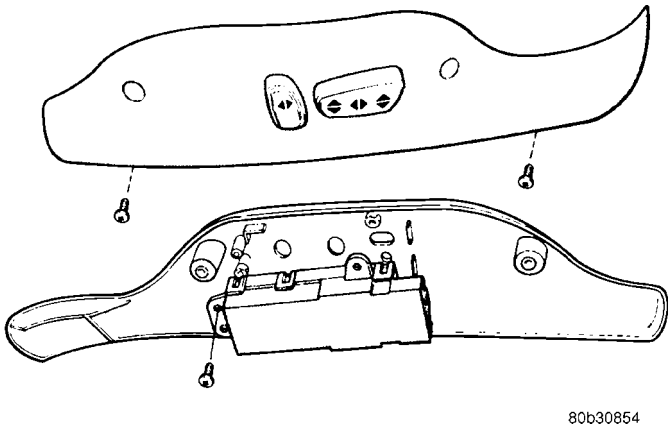

Fig. 4 Power Seat Switch and Seat Side Shield

(3) On hardtop models, remove the knobs from the seat switch by gently prying straight off.

(4) Remove the switch attaching screws.

(5) Remove switch from cushion side shield

INSTALLATION

(1) Position the switch and install the switch attaching screws.

(2) Install the knobs on the switch (if required).

(3) Connect wiring electrical connector on switch.

(4) Install the seat cushion side shield. Refer to the Body section of the service manual for the procedure.

(5) Connect the negative battery cable remote terminal on the remote battery post.

POWER SEAT TRACK

DESCRIPTION

The eight-way power seat options include a single electrically operated power seat track unit located under the drivers seat. The power seat track unit replaces the standard equipment manual seat track. There are three reversible motors that operate the power seat adjuster. The motors are connected to worm-drive gearboxes that move the seat adjuster through a combination of screw-type drive units. The lower half of the power seat track is secured at the front with two bolts to the floor panel seat cross member, and at the rear with two bolts to the floor panel. Four fasteners secure the bottom of the seat cushion frame to four studs on the upper half of the power seat track unit.

The front and rear of a seat are operated by different motors. They can be raised or lowered independently of each other. When the center seat switch is pushed in the Up or Down direction, both the front and rear motors operate in unison. The forward-rearward motor is operated by pushing the center seat switch in the Forward or Rearward direction, which moves the entire seat in the selected direction on all models.

Each motor contains a self-resetting circuit breaker to protect it from overload. Consecutive or frequent resetting of the circuit breakers must not be allowed to continue, or the motors may be damaged. Make the necessary repairs.

The power seat adjuster and motors cannot be repaired, and are serviced only as a complete unit. If any component in this unit is faulty or damaged, the entire power seat adjuster and motors assembly must be replaced.

OPERATION

The power seat track unit includes three reversible electric motors that are secured to the upper half of the track unit. Each motor moves the seat adjuster through a combination of worm-drive gearboxes and screw-type drive units.

The front and rear of the seat are operated by two separate vertical adjustment motors. These motors can be operated independently of each other, tilting the entire seat assembly forward or rearward; or, they can be operated in unison by selecting the proper power seat switch functions, which will raise or lower the entire seat assembly. The third motor is the horizontal adjustment motor, which moves the seat track in the forward and rearward directions.

POWER SEAT TRACK (Continued)

DIAGNOSIS AND TESTING - POWER SEAT TRACK

(1) Remove power seat switch from seat.
(2) Disconnect wire harness connector.
(3) Check Pin 1 for battery voltage and Pin 5 for ground. On convertible models refer to step 5.
(4) To test the seat motors, refer to the, and verify proper seat responses. Using two jumper wires, connect one to a battery supply and the second to a ground. Connect the other ends to the seat wire harness connector as described in the Switch Harness Connector Circuit Test table (Fig. 5).

SWITCH HARNESS CONNECTOR CIRCUIT TEST

CAVITY	TEST		FUNCTION
	(+)	(–)	
1			FUSED B(+)
2	2	4	SEATBACK RECLINER DOWN
3	10	3	SEAT FORWARD
4	4	2	SEATBACK RECLINER UP
5			GROUND
6	6	9	FRONT RISER DOWN
7	7	8	REAR RISER DOWN
8	8	7	REAR RISER UP
9	9	6	FRONT RISER UP
10	3	10	SEAT REARWARD

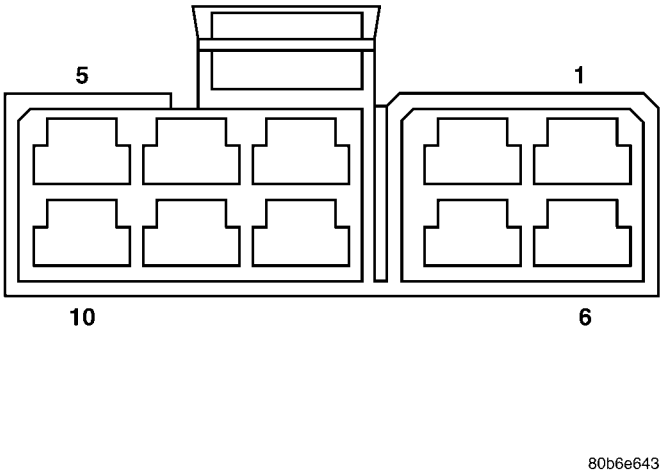

Fig. 5 Seat Switch Electrical Connector - Hardtop

POWER SEAT TRACK (Continued)

(5) Using a voltmeter, connect the ground lead to PIN B of the switch harness connector. Connect the positive lead to PIN A (Fig. 6). If battery voltage is present, the ground and voltage circuits to the power seat switch are OK. Check the power seat switch for proper operation (Refer to 8 - ELECTRICAL/POWER SEATS/DRIVER SEAT SWITCH - DIAGNOSIS AND TESTING). If the seat switch checks out OK, remove the seat assembly and check the circuits from the power seat switch to the power seat track adjuster motors for proper continuity. If the circuits appear to be OK, replace the power seat track and adjuster motors as an assembly.

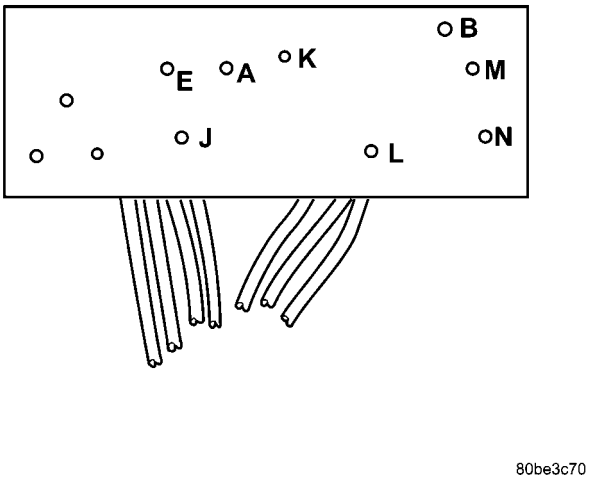

Fig. 6 Seat Switch Electrical Connector - Convertible

REMOVAL

Before the seat track can be removed, the front seat assembly must be removed from the vehicle. Refer to the Body section of this manual for the Front Seat Removal and Installation procedure.

(1) Disconnect and isolate the battery negative remote cable.

(2) Remove the appropriate front seat from the vehicle. Once the front seat is removed, lay it on a clean surface upside down to expose the underside of the seat assembly.

(3) Remove the seat cushion side shields from the seat assembly. Refer to the Body section of this manual for the Seat Cushion Side Shield Removal and Installation procedure.

(4) Disconnect the necessary power seat electrical connectors.

(5) Remove the bolts retaining the power seat track to the seat assembly and remove.

INSTALLATION

(1) Position the seat track and install the retaining bolts. Torque the bolts to 12 N·m (108 in. lbs.).

(2) Connect the necessary power seat electrical connectors.

(3) Install the seat cushion side shields on the seat assembly. Refer to the Body section of this manual for the Seat Cushion Side Shield Installation procedure.

(4) Install the appropriate front seat in the vehicle. Refer to the Body section of this manual for the Seat Installation procedure.

(5) Connect the battery negative remote cable.

POWER WINDOWS

TABLE OF CONTENTS

page

POWER WINDOWS
DESCRIPTION 17
OPERATION 17
DIAGNOSIS AND TESTING - POWER WINDOWS 17
WINDOW DROP RELAY
REMOVAL 18
INSTALLATION 18
WINDOW MOTOR
DIAGNOSIS AND TESTING - WINDOW MOTOR 18
REMOVAL 18
INSTALLATION 18
WINDOW SWITCH
DIAGNOSIS AND TESTING - WINDOW SWITCH 19
REMOVAL 20
INSTALLATION 20

POWER WINDOWS

DESCRIPTION

The power window system allows each of the door windows to be raised and lowered electrically by actuating a switch on the trim panel of each respective door. A master switch on the driver side front door trim panel allows the driver to raise or lower each of the passenger door windows, and to lock out the individual switches on the passenger doors from operation. The power window system receives battery feed through a 30 amp circuit breaker in the junction block, only when the ignition switch is in the RUN position.

The power top switch (JR27 only) has three distinct functions:

- **Top Down -** This is the first detent on the down side of the switch. Holding the switch in this position will lower the top only.
- **Top Down/4 window down -** This is the second detent on the switch. Holding the switch in this position lowers the convertible top and all 4 windows down simultaneously only if held in this position.
- **Top Up -** Holding the switch in this position raises the convertible top to the closed position. It will also lower all 4 windows approximately 3 inches to prevent seal damage.

The power window system includes the power window switches on each door trim panel, the circuit breaker in the junction block, and the power window motors inside each door. For service of mechanical components, such as the regulator, lift plate, window tracks, or glass refer to Group 23 - Body.

OPERATION

Front and rear door window lift motors are of the permanent magnet type. A battery positive and negative connection to either of the two motor terminals will cause the motor to rotate in one direction. Reversing current through these same two connections will cause the motor to rotate in the opposite direction.

Each individual motor is grounded through the master switch.

DIAGNOSIS AND TESTING - POWER WINDOWS

CIRCUIT TEST

The following circuit test sequence determines whether or not voltage is continuous through the body harness to switch.

(1) Remove the driver door trim panel.

(2) Carefully separate wiring harness connector from switch body.

(3) Using a voltmeter, connect the ground lead to the Pin 10 of the wiring harness connector.

(4) Using the positive lead, check Pin 1 of the harness connector for battery voltage. If OK, refer to Window Switch Test. If not OK, check 30 amp circuit breaker in the Junction Block. If the circuit breaker is OK, repair wire as necessary. For wiring, specific connector type and location, refer to the appropriate wiring information. The wiring information includes wiring diagrams, proper wire and connector repair procedures, details of wire harness routing and retention, connector pin-out information and location views for the various wire harness connectors, splices and grounds.

POWER WINDOWS (Continued)

WINDOW DROP RELAY TEST - JR27 ONLY

The following test should be performed if all windows do not lower when the top switch is in the down position.

(1)
Check for battery voltage at pins C1, F1 and D1 of the window drop relay wire connector. If OK, go to Step 2. If not OK, check the circuit breaker and fuse or check for a shorted or open wire. Repair as necessary.

(2) Check pin D1 of the window drop relay wire connector for ground while pressing the top down switch. If not OK, check the power top up/down relay wiring. If OK, replace the window drop relay.

WINDOW DROP RELAY

REMOVAL

(1) Disconnect and isolate the battery negative cable.

(2) Remove door trim panel.

(3) Peel back the waterdam to expose the window drop relay.

(4) Disconnect the wire harness connector.

(5) Remove the window drop relay from the door panel.

INSTALLATION

(1) Install the window drop relay to the door panel.

(2) Connect the wire harness connector.

(3) Place the waterdam into position on the door panel,

(4) Install door trim panel.

(5) Connect the battery negative cable.

WINDOW MOTOR

DIAGNOSIS AND TESTING - WINDOW MOTOR

(1) Remove door trim panel. (Refer to 23 - BODY/DOOR - FRONT/TRIM PANEL - REMOVAL).

(2) Connect positive (+) lead from a test battery to either of the two motor terminals.

(3) Connect negative (-) lead from test battery to remaining motor terminal.

(4) The motor should now rotate in one direction to either move window up or down.

(a) If window happens to already be in full UP position and motor is connected so as to move it in UP direction no movement will be observed.

(b) Likewise, motor connected to move window in DOWN direction no movement will be observed if window is already in full DOWN position.

(c) Reverse battery leads in Step 1 and Step 2 and window should now move. If window does not move, replace motor.

(5) If window moved completely up or down, the test leads should be reversed one more time to complete a full window travel inspection.

(6) If window does not move, check to make sure that it is free.

(7) It is necessary that the window be free to slide up and down in the glass channels. If the window is not free to move up and down, the window lift motor will not be able to move the glass.

(8) To determine if the glass is free, disconnect the regulator from the glass lift plate. Remove the two attaching screws, and slide the window up and down by hand.

REMOVAL

(1) Disconnect and isolate the battery negative cable.

(2) Remove the window regulator. (Refer to 23 - BODY/DOOR - FRONT/WINDOW REGULATOR - REMOVAL).

WARNING: FAILURE TO CLAMP THE SECTOR GEAR TO THE MOUNTING PLATE WHEN REMOVING THE MOTOR CAN RESULT IN INJURY.

(3) Secure the sector and mounting plate with a C clamp or similar clamping tool. This will prevent a sudden and forceful movement of the regulator when the motor is removed.

(4) Remove the motor from the regulator.

INSTALLATION

(1) Install motor on regulator by positioning motor gearbox so that it engages regulator sector teeth. A slight rotational or rocking movement may be necessary to bring the motor gearbox mounting holes into proper position.

(2) Install the motor fasteners. Tighten to 8 N·m (70 in. lbs.).

(3) Install regulator. (Refer to 23 - BODY/DOOR - FRONT/WINDOW REGULATOR - INSTALLATION).

WINDOW SWITCH

DIAGNOSIS AND TESTING - WINDOW SWITCH

For switch testing, remove the switch. (Refer to 8 - ELECTRICAL/POWER WINDOWS/POWER WINDOW SWITCH - REMOVAL). Using an ohmmeter, refer to Window Switch Continuity Charts to determine if continuity is correct (Fig. 1) and (Fig. 2). If the results are not obtained, replace the switch.

The master window switch has an Auto-Down feature. Actuation of the master switch to the second down position will move the drivers side window completely down. The electronic switch will automatically disconnect the motor approximately 1 second after the window bottoms out. Failure of the electronic switch to detect stall current, will cause the switch to disconnect after approximately 13 seconds. The auto down function can be canceled by any movement of that switch.

MASTER WINDOW SWITCH TEST

SWITCH POSITION	CONTINUITY BETWEEN
OFF	10 AND 2
	10 AND 3
	10 AND 4
	10 AND 7
	10 AND 8
	10 AND 9
	10 AND 11
	10 AND 12
LEFT FRONT UP	1 AND 7
	8 AND 10
LEFT FRONT DOWN	1 AND 8
	7 AND 10
RIGHT FRONT UP	1 AND 12
	10 AND 11
RIGHT FRONT DOWN	1 AND 11
	10 AND 12
LEFT REAR UP	3 AND 10
	1 AND 2
LEFT REAR DOWN	3 AND 1
	2 AND 10
RIGHT REAR UP	1 AND 4
	9 AND 10
RIGHT REAR DOWN	1 AND 9
	4 AND 10
LOCKOUT SWITCH (SWITCH NOT DEPRESSED)	1 AND 5

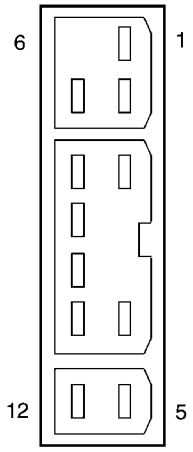

806dc17f

Fig. 1 MASTER WINDOW SWITCH CONNECTOR

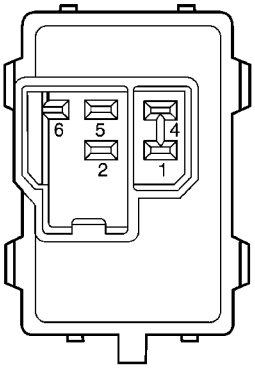

806dc180

Fig. 2 PASSENGER WINDOW SWITCH

WINDOW SWITCH (Continued)

PASSENGER WINDOW SWITCH TEST

SWITCH POSITION	CONTINUITY BETWEEN
OFF	2 AND 5
	1 AND 4
UP	1 AND 4
	5 AND 6
DOWN	2 AND 5
	1 AND 6

REMOVAL

(1) Disconnect and isolate the battery negative cable.

(2) Remove the door trim panel. (Refer to 23 - BODY/DOOR - FRONT/TRIM PANEL - REMOVAL).

(3) Remove the switch mounting fasteners.

INSTALLATION

(1) Install switch and mounting fasteners.

(2) Install door trim panel. (Refer to 23 - BODY/DOOR - FRONT/TRIM PANEL - INSTALLATION).

(3) Connect battery negative cable.

RESTRAINTS

TABLE OF CONTENTS

page

RESTRAINTS
WARNING
WARNINGS 2
DIAGNOSIS AND TESTING - AIRBAG SYSTEM . 2
STANDARD PROCEDURE
STANDARD PROCEDURE - HANDLING AIRBAGS 3
STANDARD PROCEDURE - SERVICE AFTER AN AIRBAG DEPLOYMENT 3
CHILD RESTRAINT ANCHOR
DESCRIPTION 4
OPERATION 4
REMOVAL 4
INSTALLATION 4
CHILD TETHER CUP
REMOVAL 4
INSTALLATION 4
CHILD TETHER CUP COVER
REMOVAL 5
INSTALLATION 5
CLOCK SPRING
DESCRIPTION 5
OPERATION 5
STANDARD PROCEDURE - CLOCK SPRING CENTERING 5
REMOVAL 5
INSTALLATION 6
CURTAIN AIRBAG
DESCRIPTION 6
OPERATION 6
REMOVAL 6
INSTALLATION 6
DRIVER AIRBAG
DESCRIPTION 7
OPERATION 7
REMOVAL 7
INSTALLATION 7
DRIVER AIRBAG TRIM COVER
REMOVAL 7
INSTALLATION 8
FRONT SEAT BELT BUCKLE - JR27 ONLY
REMOVAL 8
INSTALLATION 8
FRONT SEAT BELT & RETRACTOR - JR27 ONLY
REMOVAL 8
INSTALLATION 9
OCCUPANT RESTRAINT CONTROLLER
DESCRIPTION 9
OPERATION 9
REMOVAL 9
INSTALLATION 9
PASSENGER AIRBAG
DESCRIPTION 10
OPERATION 10
REMOVAL 10
INSTALLATION 10
REAR SEAT BELT BUCKLE - JR27 ONLY
REMOVAL 10
INSTALLATION 10
REAR SEAT BELT & RETRACTOR - JR27 ONLY
REMOVAL 11
INSTALLATION 11
SATELLITE ACCELERATION SENSOR
DESCRIPTION 11
OPERATION 11
REMOVAL 11
INSTALLATION 12
SEAT BELT CONTROL TIMER MODULE - JR27 - EXPORT
DESCRIPTION 12
OPERATION 12
DIAGNOSIS AND TESTING - SEAT BELT CONTROL TIMER MODULE 12
REMOVAL 14
INSTALLATION 14
SEAT BELT HEIGHT ADJUSTER
REMOVAL 14
INSTALLATION 14
SEAT BELT - REAR INBOARD
REMOVAL 15
INSTALLATION 15
SEAT BELT - REAR OUTBOARD
REMOVAL 15
INSTALLATION 15
SEAT BELT & RETRACTOR - FRONT OUTBOARD
REMOVAL 15
INSTALLATION 16
SEAT BELT & RETRACTOR - REAR CENTER
REMOVAL 16
INSTALLATION 16
SEAT BELT TENSIONER
DESCRIPTION 16
OPERATION 17

RESTRAINTS

WARNING

WARNINGS

WARNING: THIS SYSTEM IS A SENSITIVE, COMPLEX UNIT. DISCONNECT AND ISOLATE THE BATTERY NEGATIVE CABLE BEFORE BEGINNING AIRBAG SYSTEM COMPONENT REMOVAL OR INSTALLATION PROCEDURES. THIS WILL DISABLE THE AIRBAG SYSTEM. FAILURE TO DISCONNECT THE BATTERY COULD RESULT IN ACCIDENTAL AIRBAG DEPLOYMENT AND POSSIBLE PERSONAL INJURY.

ALLOW SYSTEM CAPACITOR TO DISCHARGE FOR TWO MINUTES BEFORE REMOVING AIRBAG COMPONENTS.

DO NOT PLACE AN INTACT UNDEPLOYED AIRBAG FACE DOWN ON A SOLID SURFACE, THE AIRBAG WILL PROPEL INTO THE AIR IF ACCIDENTALLY DEPLOYED AND COULD RESULT IN PERSONAL INJURY. WHEN CARRYING OR HANDLING AN UNDEPLOYED AIRBAG, THE TRIM SIDE OF THE AIRBAG SHOULD BE POINTING TOWARDS THE BODY TO MINIMIZE POSSIBILITY OF INJURY IF ACCIDENTAL DEPLOYMENT OCCURS.

REPLACE AIRBAG SYSTEM COMPONENTS WITH MOPAR® REPLACEMENT PARTS. SUBSTITUTE PARTS MAY APPEAR INTERCHANGEABLE, BUT INTERNAL DIFFERENCES MAY RESULT IN INFERIOR OCCUPANT PROTECTION.

WEAR SAFETY GLASSES, RUBBER GLOVES, AND LONG SLEEVED CLOTHING WHEN CLEANING POWDER RESIDUE FROM VEHICLE AFTER AIRBAG DEPLOYMENT. POWDER RESIDUE EMITTED FROM A DEPLOYED AIRBAG CAN CAUSE SKIN IRRITATION. FLUSH AFFECTED AREA WITH COOL WATER IF IRRITATION IS EXPERIENCED. IF NASAL OR THROAT IRRITATION IS EXPERIENCED, EXIT THE VEHICLE FOR FRESH AIR UNTIL THE IRRITATION CEASES. IF IRRITATION CONTINUES, SEE A PHYSICIAN.

DO NOT USE A REPLACEMENT AIRBAG THAT IS NOT IN THE ORIGINAL PACKAGING. IMPROPER DEPLOYMENT AND PERSONAL INJURY CAN RESULT.

THE FACTORY INSTALLED FASTENERS, SCREWS AND BOLTS USED TO FASTEN AIRBAG COMPONENTS ARE SPECIFICALLY DESIGNED FOR THE AIRBAG SYSTEM. DO NOT USE SUBSTITUTE FASTENERS, USE ONLY ORIGINAL EQUIPMENT FASTENERS LISTED IN THE PARTS CATALOG WHEN FASTENER REPLACEMENT IS REQUIRED.

AIRBAGS SHOULD BE STORED IN A COOL DRY LOCATION AWAY FROM EXCESSIVE HEAT AND STATIC ELECTRICAL ACTIVITY WITH THE FABRIC AIRBAG FACING UP, A PREMATURE DEPLOYMENT CAN RESULT.

CAUTION:
Deployed and Nondeployed Air Bags may or may not have live pyrotechnic material within the air bag inflator. Do not dispose of Driver and Passenger Airbags unless you are sure of complete deployment. Please refer to the Hazardous Substance Control System for Proper Disposal. Dispose of deployed air bags in a manner consistent with state, provincial, local, and federal regulations.

WARNING: DURING, AND FOLLOWING, ANY CHILD RESTRAINT ANCHOR SERVICE, DUE TO IMPACT EVENT OR VEHICLE REPAIR, CAREFULLY INSPECT ALL MOUNTING HARDWARE, TETHER STRAPS AND ANCHORS FOR PROPER INSTALLATION, OPERATION, OR DAMAGE. IF A CHILD RESTRAINT ANCHOR IS FOUND DAMAGED IN ANY WAY, THE ANCHOR MUST BE REPLACED.

DIAGNOSIS AND TESTING - AIRBAG SYSTEM

(1) With the battery negative remote cable disconnected, connect the DRB III® scan tool to the Data Link connector.

(2) Turn the ignition key to the ON position. Exit vehicle with the scan tool.

(3) After checking that no one is inside the vehicle, connect the battery negative remote terminal.

(4) Read and record the **ACTIVE** Diagnostic Trouble Code (DTC) data.

(5) Read and record any **STORED** DTC's.

(6) Refer to the proper Body Diagnostic Procedures manual if any DTC's are found in Step 4 and Step 5.

(7) If the airbag warning lamp either fails to light, or goes ON and stays ON, there is a system malfunction. To test the airbag warning lamp (bulb) operation in the cluster, refer to Electrical, Instrument Cluster, Diagnosis and Testing - Instrument Cluster. Refer to the proper Body Diagnostic Procedures manual for any other system problems.

RESTRAINTS (Continued)

STANDARD PROCEDURE

STANDARD PROCEDURE - HANDLING AIRBAGS

DEPLOYED AIRBAG

The vehicle interior may contain a very small amount of sodium hydroxide powder, a by-product of airbag deployment. Sodium hydroxide powder can irritate the skin, eyes, nose and throat. Wear safety glasses, rubber gloves, and long sleeved clothing when cleaning any of the powder residue from the vehicle.

If you find that the cleanup is irritating your skin, run cool water over the affected area. Also, if you experience nasal or throat irritation, exit the vehicle for fresh air until the irritation ceases. If irritation continues, see a physician.

UNDEPLOYED AIRBAG

The airbags must be stored in its original special container until used for service. At no time should a source of electricity be permitted near the inflator on the back of an airbag module. When carrying or handling an undeployed airbag module, the trim side of the airbag should be pointing away from the body to minimize possibility of injury if accidental deployment occurs. Do not place undeployed airbag face down on a solid surface, the airbag will propel into the air if accidental deployment occurs.

STANDARD PROCEDURE - SERVICE AFTER AN AIRBAG DEPLOYMENT

DRIVER AIRBAG

After a Driver Airbag has been deployed due to a collision, the following **MUST** be replaced:

- Driver Airbag
- Clock Spring Assembly
- Steering Wheel
- Complete Steering Column Assembly

All other airbag and vehicle components, including wiring should be closely inspected following any airbag deployment, and should be replaced when visible damage is incurred.

PASSENGER AIRBAG

After a Passenger Airbag has been deployed due to a collision. the following **MUST** be replaced:

- Passenger Airbag
- Instrument Panel and Pad Assembly

All other airbag and vehicle components, including wiring should be closely inspected following any airbag deployment, and should be replaced when visible damage is incurred.

CURTAIN AIRBAG

After a Curtain Airbag has been deployed due to a collision. the following **MUST** be replaced:

- Curtain Airbag Assembly
- Headliner
- A, B, and C-Pillar Trim on deployed side.
- Satellite Acceleration Sensor (SAS).

All other airbag and vehicle components, including wiring should be closely inspected following any airbag deployment, and should be replaced when visible damage is incurred.

SEAT BELT TENSIONERS

After an impact where the front airbags have been deployed due to a collision. the following **MUST** be replaced:

- JR41 - Front Seat Belt Retractors (driver and passenger) with integral Tensioners.
- JR27 - Front Seat Belt Buckle (driver and passenger) with integral Tensioners.

All other seat belts should be closely inspected for cuts, tears, fraying, or damage in any way following any impact or airbag deployment. The other seat belts are to be replaced when visible damage is incurred. Make sure to inspect the tensioner connector for visible damage, and replace wiring if found.

CLEAN UP PROCEDURE

Roll or fold the airbag towards its mounting point (i.e. instrument panel, steering wheel, or roof sill). Then tape the ripped cover over the deployed airbag if applicable.

Use a vacuum cleaner to remove any residual powder from the vehicle interior. Work from the outside in to avoid kneeling or sitting in a contaminated area. Vacuum the heater and A/C outlets as well (Fig. 1). If the heater or air conditioner was in RECIRC mode at time of airbag deployment, operate blower motor on low speed and vacuum powder residue expelled from the heater and A/C outlets. Multiple vacuum cleaning may be necessary to decontaminate the interior of the vehicle.

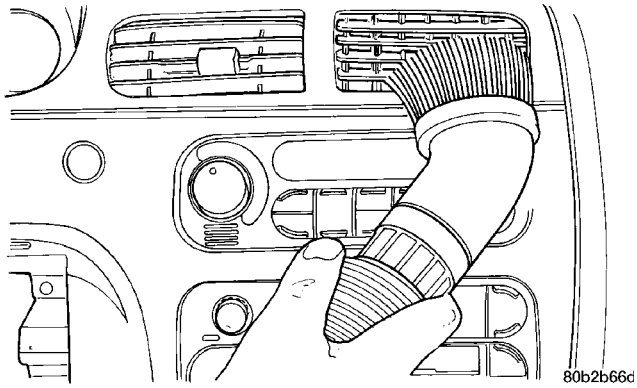

Fig. 1 VACUUM HEATER AND A/C OUTLETS - TYPICAL

CHILD RESTRAINT ANCHOR

DESCRIPTION

Vehicles manufactured for sale in the North American market are equipped with a Lower Anchors and Tether for CHildren, or LATCH child restraint anchorage system. The LATCH system provides for the installation of suitable child restraints in certain seating positions without using the standard equipment seat belt provided for that seating position. The rear seat in these models are equipped with a fixed-position child restraint upper tether anchor and child restraint lower anchors for the two outboard seating positions only. Vehicles manufactured for sale outside of North America are equipped with a fixed-position child restraint upper tether anchor for both the center and the two outboard seating positions, but does not have the child restraint lower anchors.

JR41

JR27 vehicles manufactured for sale in North America have two upper tether anchor attachments that are located in the convertible top well area. These child tether anchors are concealed in the convertible top well area underneath the trim carpet and labeled. They are stamped into the rear bulkhead behind the rear seat back and are not serviceable.

Vehicles manufactured for sale in North America also have two lower anchors for each rear outboard seating position (Fig. 2). These anchors are mounted on a bracket and secured to the floor pan. They are each accessed from the front of their respective seats, at each side where the seat back meets the seat cushion. These lower anchors cannot be adjusted or repaired and, if faulty or damaged, they must be replaced as a unit with their mounting bracket.

OPERATION

See the owner's manual in the vehicle glove box for more information on the proper use of all of the factory-installed child restraint anchors.

REMOVAL

WARNING: DURING, AND FOLLOWING, ANY CHILD RESTRAINT ANCHOR SERVICE, DUE TO IMPACT EVENT OR VEHICLE REPAIR, CAREFULLY INSPECT ALL MOUNTING HARDWARE, TETHER STRAPS AND ANCHORS FOR PROPER INSTALLATION, OPERATION, OR DAMAGE. IF A CHILD RESTRAINT ANCHOR IS FOUND DAMAGED IN ANY WAY, THE ANCHOR MUST BE REPLACED.

(1) Remove the lower seat cushion (Refer to 23 - BODY/SEATS/SEAT CUSHION - REMOVAL).

(2) Remove two nuts to LATCH bracket.

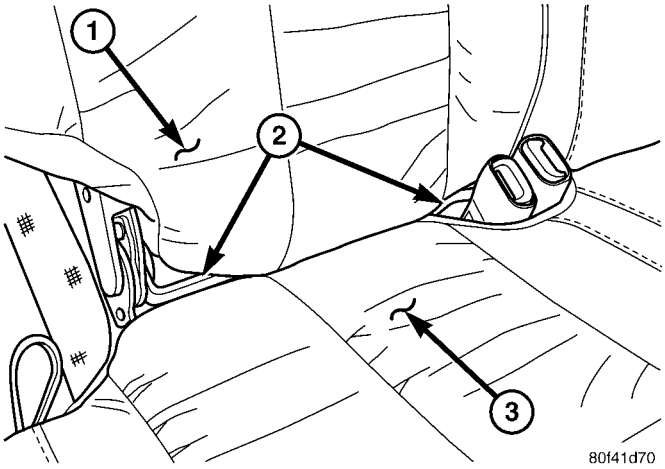

Fig. 2 Child Restraint Lower Anchors

1 - REAR SEAT BACK
2 - LOWER ANCHOR (2 PER OUTBOARD REAR SEATING POSITION)
3 - REAR SEAT CUSHION

(3) Remove bracket from vehicle.

INSTALLATION

WARNING: DURING, AND FOLLOWING, ANY CHILD RESTRAINT ANCHOR SERVICE, DUE TO IMPACT EVENT OR VEHICLE REPAIR, CAREFULLY INSPECT ALL MOUNTING HARDWARE, TETHER STRAPS AND ANCHORS FOR PROPER INSTALLATION, OPERATION, OR DAMAGE. IF A CHILD RESTRAINT ANCHOR IS FOUND DAMAGED IN ANY WAY, THE ANCHOR MUST BE REPLACED.

(1) Place LATCH bracket on studs and install retaining nuts. Torque nuts to 40 N·m (350 in. lbs.).

(2) Install the rear seat cushion (Refer to 23 - BODY/SEATS/SEAT CUSHION - INSTALLATION).

CHILD TETHER CUP

REMOVAL

(1) Remove the rear shelf trim panel from vehicle.

(2) Turn the shelf panel over so that the bottom side is upward to access the Child Tether Cup locks.

(3) With a trim stick (special tool #C-4733) or equivelant, push attachment locks toward the center of the cup to release the Child Tether Cup from the rear shelf panel.

(4) Remove the Child Tether Cup.

INSTALLATION

(1) Place the Child Tether Cup into position on top of the rear shelf trim panel.

CHILD TETHER CUP (Continued)

(2) Press rearward until cup engages into the rear shelf trim panel.

(3) Push the front of cup down into the rear shelf trim panel.

(4) Install the rear shelf panel.

CHILD TETHER CUP COVER

REMOVAL

(1) Open the Child Tether Cup Cover to the full open position.

(2) Push cover towards the rear of the vehicle until the cover detaches from the cup.

INSTALLATION

(1) Place the Child Tether Cup cover into position on top of the rear shelf trim panel.

(2) Push downward on the Child Tether Cup Cover until it locks into position (you will hear it click into place).

CLOCK SPRING

DESCRIPTION

The clock spring assembly is mounted near the top of the steering column behind the steering wheel. The clock spring is used to maintain a continuous electrical circuit between the fixed instrument panel wire harness connector on the steering column and several electrical components that rotate with the steering wheel. The rotating components include the driver airbag, the horn switch, and the vehicle speed control switches.

The clock spring cannot be repaired. If the clock spring is faulty, damaged, or if the driver airbag has been deployed, the clock spring must be replaced.

OPERATION

The clock spring assembly consists of a plastic case which contains a flat, ribbon-like, electrically conductive tape that winds and unwinds like a clock spring with the steering wheel rotation. The electrically conductive tape consists of several fine gauge copper wire leads sandwiched between two narrow strips of plastic film.

Like the clock spring in a timepiece, the clock spring tape has travel limits and can be damaged by being wound too tightly. To prevent this from occurring, the clock spring is centered when it is installed on the steering column. Centering the clock spring indexes the clock spring tape to other steering components so that it can operate within its designed travel limits. However, if the clock spring is removed for service or if the steering column is disconnected from the steering gear allowing the clock spring tape to change position relative to the other steering components, it must be re-centered following completion of the service or it may be damaged. Refer to Electrical, Restraints, Clock Spring, Standard Procedure - Clock Spring Centering.

STANDARD PROCEDURE - CLOCK SPRING CENTERING

WARNING: IF THE ROTATING TAPE WITHIN THE CLOCK SPRING IS NOT POSITIONED PROPERLY WITH THE STEERING WHEEL AND THE FRONT WHEELS, THE CLOCK SPRING MAY FAIL DURING USE. THE CLOCK SPRING IS CENTERED WHEN YELLOW APPEARS IN THE CENTERING WINDOW AND THE ARROW ON THE LABEL POINTS TO THE DRIVE PIN. IF THE CLOCK SPRING IS NOT CENTERED, THIS PROCEDURE MUST BE USED TO CENTER THE CLOCK SPRING.

(1) Adjust the steering wheel so that the tires are in a straight ahead position.

(2) Remove driver airbag from steering wheel.

(3) Disconnect wire connectors from back of airbag.

(4) Remove steering wheel.

(5) Depress the plastic locking pin to disengage lock mechanism.

(6) With lock mechanism disengaged, rotate the clock spring rotor clockwise until the rotor stops. Do not apply excessive force.

(7) From the end of travel, rotate the rotor three turns counterclockwise. The wires should end up at the top. Release the plastic locking pin to engage clock spring lock mechanism.

(8) Install steering wheel and airbag.

WARNING: DO NOT CONNECT THE BATTERY NEGATIVE CABLE. REFER TO ELECTRICAL, RESTRAINTS, DIAGNOSIS AND TESTING - AIRBAG SYSTEM FIRST.

REMOVAL

(1) Disconnect and isolate the battery negative remote cable.

(2) Wait two minutes for the system reserve capacitor to discharge before servicing any airbag components.

(3) Remove the steering wheel (Refer to 19 - STEERING/COLUMN/STEERING WHEEL - REMOVAL). Carefully feed all wires over the steering wheel armature to avoid damaging wires. When replacing a deployed Driver Airbag, a new clock spring must be installed.

(4) Remove multi-function switch (Refer to 8 - ELECTRICAL/LAMPS/LIGHTING - EXTERIOR/ MULTI-FUNCTION SWITCH - REMOVAL).

CLOCK SPRING (Continued)

(5) Remove the clock spring by lifting the top lock housing latches up slightly to guide it over the lock housing. The clock spring cannot be serviced and must be replaced if defective, damaged, or the vehicle has sustained an impact where the front airbags were deployed.

INSTALLATION

If reinstalling a clock spring. Make sure the clock spring is centered (Refer to 8 - ELECTRICAL/RESTRAINTS/CLOCKSPRING - STANDARD PROCEDURE).

(1) Align the top locking tab with the slot on the lock housing. Gently push into place.

(2) Install the multi-function switch (Refer to 8 - ELECTRICAL/LAMPS/LIGHTING - EXTERIOR/MULTI-FUNCTION SWITCH - INSTALLATION).

(3) Carefully route the wires over the steering wheel armature and install the steering wheel (Refer to 19 - STEERING/COLUMN/STEERING WHEEL - INSTALLATION).

WARNING: DO NOT CONNECT THE BATTERY NEGATIVE CABLE. REFER TO ELECTRICAL, RESTRAINTS, DIAGNOSIS AND TESTING - AIRBAG SYSTEM FIRST.

CURTAIN AIRBAG

DESCRIPTION

Vehicles equipped with the Side Impact Airbag System utilize two Curtain Airbags mounted in each respective side of the headliner, stretching from the middle of the A-pillar at the instrument panel along the roof line to the C-pillar at the rear shelf panel. This system is designed to provide supplemental restraint to driver or outboard passengers in the event of a side impact collision.

OPERATION

The Occupant Restraint Controller (ORC) controls the curtain airbags. For side impacts, the ORC senses the impact severity through Satellite Acceleration Sensors (SAS). If the ORC determines the impact is severe enough, it will send an electrical signal to inflate the appropriate curtain airbag. The airbag will inflate, dropping down from the ceiling between the headliner and windows/pillars, to provide supplemental restraint to driver or outboard passengers in the event of a side impact collision. Once a curtain airbag has been deployed, the complete curtain airbag, headliner, upper A, B, and C-pillar trim panel, and all damaged parts must be replaced on the deployed side.

REMOVAL

(1) Disconnect and isolate the battery negative remote cable.

(2) Wait two minutes for the system reserve capacitor to discharge before servicing any airbag components.

(3) Remove the Headliner. Refer to Body, Interior, Headliner, Removal.

(4) Disconnect the wire harness connector from the rear of the inflator.

(5) Remove the retaining bolt to the front tether at the instrument panel on the A-pillar.

(6) Remove the five short retaining bolts along the roof line.

(7) Remove the four long retaining bolts to the rear along the roof line and at the C-pillar.

(8) Remove all push fasteners and discard. Make sure they are completely removed.

(9) Remove the curtain airbag from the vehicle.

INSTALLATION

If replacing curtain airbag because of an airbag deployment, the inflator pan (quarter trim upper support at C-pillar) must be inspected, especially if the vehicle is equipped with a sunroof. The sunroof drain is connected to the inflator pan, and if cracked, could result in leaks. Also, the headliner must be replaced due to crease lines occurring during the airbag deployment.

(1) Install the curtain airbag into the vehicle. Make sure the airbag is not twisted upon installation.

(2) Install all push fasteners.

(3) Install the two long retaining bolts at the C-pillar to attach inflator. Torque bolts to 11 ± 1 N·m (97.36 ± 10 in. lbs.).

(4) Install the remaining two long retaining bolts to attach the curtain airbag. Torque bolts to 11 ± 1 N·m (97.36 ± 10 in. lbs.).

(5) Install the five short retaining bolts along the roof line. Torque bolts to 6 ± 1 N·m (53.11 ± 10 in. lbs.).

(6) Install the short retaining bolt to the front tether at the instrument panel on the A-pillar. Torque bolts to 6 ± 1 N·m (53.11 ± 10 in. lbs.). Make sure the tether is not twisted.

(7) Connect the wire harness connector to the rear of the inflator.

(8) Install the Headliner. Refer to Body, Interior, Headliner, Installation. Use a new headliner if curtain airbag was deployed on either side of the vehicle.

WARNING: DO NOT CONNECT THE BATTERY NEGATIVE CABLE. REFER TO ELECTRICAL, RESTRAINTS, DIAGNOSIS AND TESTING - AIRBAG SYSTEM FIRST.

DRIVER AIRBAG

DESCRIPTION

WARNING: THE DRIVER AIRBAG TRIM COVER AND HORN SWITCH ASSEMBLY ARE THE ONLY SERVICEABLE PARTS OF THE DRIVER AIRBAG. DO NOT DISASSEMBLE OTHER PARTS WITHIN AS THEY ARE NOT SERVICEABLE.

The Driver Airbag located in the center of the steering wheel is the most visible part of the system. It contains the airbag inflator, cushion, cover assembly, and their supporting components. The airbag utilizes a dual stage inflator and two initiator wire connections. the trim cover assembly, consisting of cover and horn switch in the only serviceable part of the airbag. The cushion, inflator, and inflator adaptor are covered with a wrap so the cushion does not unfold when servicing the trim cover and horn switch assembly.

OPERATION

When supplied with the proper electrical signal from the ORC, the inflator produces gas and discharges it directly into the pillow. The airbag will deploy and the pillow will fully inflate.

REMOVAL

(1) Open hood and disconnect the negative battery cable remote terminal from the remote battery post-.Wait two minutes for the system reserve capacitor to discharge before servicing any airbag components.

(2) Remove speed control switch screws from steering wheel back cover, remove switches and disconnect the wires.

(3) Remove two bolts retaining Driver Airbag.

(4) Lift airbag and disconnect the two airbag initiators, and horn switch wire connectors.

(5) Remove Driver Airbag from vehicle.

WARNING: WHEN REPLACING A DEPLOYED DRIVER AIRBAG, THE CLOCK SPRING MUST ALSO BE REPLACED. REFER TO ELECTRICAL, RESTRAINTS, CLOCK SPRING, REMOVAL, AND INSTALLATION.

INSTALLATION

(1) With the battery disconnected, connect the lead wire from the clock spring to the horn switch and both airbag initiator connectors. The airbag initiator connectors are color-coded. The grey connector from the clock spring goes to the grey connector on the airbag, and the black connector goes to the black connector on the airbag.

(2) Install the two torx bolts holding the driver airbag. torque to 9.6 ± 1 N·m (85 ±10 in. lbs.).

(3) Connect the wire connectors to the speed control switches and install switches. Torque the speed control switch mounting screws to 1.5 N·m (13 in. lbs).

WARNING: DO NOT CONNECT THE BATTERY NEGATIVE CABLE REMOTE TERMINAL. REFER TO ELECTRICAL, RESTRAINTS, DIAGNOSIS AND TESTING - AIRBAG SYSTEM FIRST.

DRIVER AIRBAG TRIM COVER

REMOVAL

The horn switch is integral to the driver airbag trim cover. If the horn switch is faulty or the driver airbag cover is scratched or distorted, the driver airbag trim cover and horn switch unit must be replaced.

(1) Disconnect and isolate the battery negative remote cable.

(2) Wait two minutes for the system reserve capacitor to discharge before servicing any airbag components.

(3) Remove the driver airbag. Refer to Electrical, Restraints, Driver Airbag, Removal.

(4) Disconnect the horn switch ground wire (black) connector from the airbag mounting plate tab.

(5) Disconnect the horn switch feed wire (red) connector from the airbag mounting plate tab.

(6) Remove the four hex nuts that secure the airbag mounting plate to the airbag.

(7) Remove the airbag mounting plate form the airbag.

(8) Remove the airbag trim cover from the airbag inflator adaptor by rotating the trim cover mounting flaps off of the mounting studs and disengaging the three tab and slot details.

NOTE: The folded cushion will remain intact by the bag wrap. Do not remove the bag wrap when servicing the airbag trim cover.

DRIVER AIRBAG TRIM COVER (Continued)

INSTALLATION

WARNING: USE EXTREME CARE TO PREVENT ANY FOREIGN MATERIAL FROM ENTERING THE DRIVER AIRBAG, OR BECOMING ENTRAPPED BETWEEN THE AIRBAG CUSHION AND THE DRIVER AIRBAG TRIM COVER. FAILURE TO OBSERVE THIS COULD RESULT IN OCCUPANT INJURIES UPON AIRBAG DEPLOYMENT.
THE DRIVER AIRBAG TRIM COVER MUST NEVER BE PAINTED. REPLACEMENT TRIM COVERS ARE SERVICED IN THE ORIGINAL COLORS. PAINT MAY CHANGE THE WAY IN WHICH THE MATERIAL OF THE TRIM COVER RESPONDS TO AN AIRBAG DEPLOYMENT. FAILURE TO OBSERVE THIS COULD RESULT IN OCCUPANT INJURIES UPON AIRBAG DEPLOYMENT.

(1) Carefully position the driver airbag in the trim cover. Be certain that the horn switch wires are routed properly in the notches adjacent to the trim cover upper mounting flap. Rotate the upper and lower trim cover mounting flaps over the four airbag studs. Ensure that the airbag inflator adapter tabs pass through the mating trim cover slots.
(2) Install the airbag mounting plate to the airbag. Be certain that the four studs pass through the mounting plate holes. Ensure that the mounting plate side flanges are positioned outside the trim cover ribbing.
(3) Install the four nuts on the airbag. Torque nuts to 9 ± 1 N·m (80 ± 10 in. lbs.).
(4) Secure the horn switch feed wire (red) connector to the airbag mounting plate.
(5) Secure the horn switch ground (black) connector to the airbag mounting plate tab.
(6) Install the driver airbag. Refer to Electrical, Restraints, Driver Airbag, Installation.

WARNING: DO NOT CONNECT THE BATTERY NEGATIVE CABLE REMOTE TERMINAL. REFER TO ELECTRICAL, RESTRAINTS, DIAGNOSIS AND TESTING - AIRBAG SYSTEM FIRST.

FRONT SEAT BELT BUCKLE - JR27 ONLY

REMOVAL

NOTE: The torque prevailing nut holding the front seat belt buckle to the seat adjuster is not reusable. Verify availability prior to proceeding.

(1) Move seat to the rear most position.
(2) Disconnect and isolate the battery negative cable.
(3) Wait two minutes for the system reserve capacitor to discharge before servicing any airbag components.
(4) Disconnect the electrical connectors to the seat belt buckle.
(5) Remove nut holding seat belt buckle to seat adjuster. Discard nut.
(6) Remove seat belt buckle from seat.

INSTALLATION

(1) Verify that the black spacer washer is properly installed over the shoulder of the weld nut on the seat adjuster.
(2) Install seat belt buckle to bolt on seat adjuster.
(3) Verify that the seat belt buckle is sitting on the shoulder of the weld nut on the seat adjuster.
(4) Install nut to hold seat belt buckle to seat adjuster. Tighten the seat belt buckle nut to 45 N·m (33 ft. lbs.) torque.

NOTE: Verify that a minimum of three threads extend beyond the seat belt buckle nut. If not, check that the bolt is fully engaged to the seat adjuster.

(5) Connect the electrical connectors to the seat belt buckle.
(6) Connect the battery negative cable.
(7) Readjust the seat.

FRONT SEAT BELT & RETRACTOR - JR27 ONLY

REMOVAL

Inspect the condition of the shoulder belt and lap belt. Replace any belt that is cut, frayed, torn, or damaged in any way. Also, replace the shoulder belt if the retractor is either damaged or inoperative.
(1) Disconnect and isolate the battery negative cable. Wait two minutes for the system capacitor to discharge.
(2) Remove the front seat from vehicle. Refer to Body, Seats, Front Seat, Removal.

NOTE: The torque prevailing nut used to secure the lower seat belt anchor is not reusable. Verify availability prior to proceeding.

(3) Remove seat back cover to gain access to seat belt retractor. Refer to Body, Seats, Front Seat Cover, Removal.
(4) Remove seat belt retractor cover.
(5) Remove and discard bolts attaching seat belt retractor to seat frame (Fig. 3).

FRONT SEAT BELT & RETRACTOR - JR27 ONLY (Continued)

CAUTION: Do not reuse the bolts attaching the seat belt retractor to the seat frame.

(6) Remove seat belt retractor from seat frame.
(7) Disconnect wire connector from seat belt retractor.

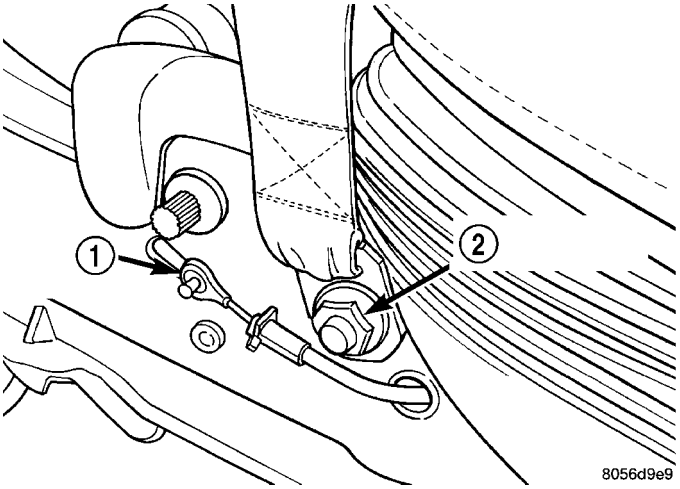

Fig. 3 LOWER SEAT BELT ANCHOR AND RECLINER CABLE

1 - RECLINER CABLE
2 - LOWER SEAT BELT ANCHOR

INSTALLATION

Inspect the condition of the shoulder and lap belt. Replace any belt that is cut, frayed, torn, or damaged in any way. Also, replace the shoulder belt if the retractor is either damaged or inoperative.

(1) Position seat belt retractor to seat frame.
(2) Connect wire connector to seat belt retractor.
(3) Install new bolts to hold seat belt retractor to seat frame. Tighten the retractor bolts to 16.2 N·m (12 ft. lbs.) torque.
(4) Install seat belt retractor cover.
(5) Install seat cover. Refer to Body, Seats, Front Seat Cover, Installation.
(6) Attach lower seat belt anchor to bolt on seat adjuster.
(7) Verify that seat belt is routed such that it will not be twisted when engaged to the seat belt buckle.
(8) Verify that a minimum of three threads extend beyond the lower seat belt anchor nut and that the lower seat belt anchor swivels freely. If both conditions are not found, check that the bolt is fully engaged to the seat adjuster.
(9) Install seat in vehicle. Refer to Body, Seats, Front Seat, Installation.

CAUTION: Failure to follow proper installation procedure may result in the seat track latch pins not being synchronized.

(10) Connect the battery negative cable.

OCCUPANT RESTRAINT CONTROLLER

DESCRIPTION

The Occupant Restraint Controller (ORC) is also sometimes referred to as the Airbag Control Module (ACM). The ORC contains the impact sensor and energy reserve capacitor. The sensor is calibrated for the specific vehicle and reacts to the severity and direction of the impact.

OPERATION

The ORC monitors the system to determine the system readiness. The ORC stores sufficient energy to deploy the airbags in case battery power is lost prior to impact. The ORC contains on-board diagnostics, and illuminates the AIRBAG warning lamp in the cluster when a diagnostic trouble code occurs. The warning equipment is tested for a few seconds every time the vehicle is started.

REMOVAL

(1) Disconnect and isolate the battery negative remote cable.
(2) Wait two minutes for the system reserve capacitor to discharge before servicing any airbag components.
(3) For a manual transmission, remove shifter knob and boot.
(4) For automatic transmission models, remove shifter knob and unsnap shift indicator bezel.
(5) Remove the four attaching screws to floor console.
(6) Remove parking brake lever. Refer to Brakes, Parking Brake, Parking Brake Lever, Removal.
(7) Remove three mounting screws to ORC.
(8) Disconnect wire harness connectors and remove ORC.

INSTALLATION

CAUTION: Use supplied screws only.

(1) With the battery disconnected, align the ORC (arrow pointing forward) on center tunnel.
(2) Connect wire harness connector.
(3) Attach the three mounting screws and tighten to 9 N·m (80 in. lbs.) torque.
(4) Install the parking brake lever. Refer to Brakes, Parking Brake, Parking Brake Lever, Installation.
(5) Install the floor console.

OCCUPANT RESTRAINT CONTROLLER (Continued)

(6) Install the four attaching screws to floor console.

(7) For automatic transmission models, install the shift indicator bezel and shifter knob.

(8) For a manual transmission, install the shifter boot and knob.

WARNING: DO NOT CONNECT THE BATTERY NEGATIVE CABLE REMOTE TERMINAL. REFER TO ELECTRICAL, RESTRAINTS, DIAGNOSIS AND TESTING - AIRBAG SYSTEM FIRST.

PASSENGER AIRBAG

DESCRIPTION

WARNING: NEVER DISASSEMBLE THE PASSENGER AIRBAG, THERE ARE NO SERVICEABLE PARTS WITHIN.

The most visible part of the Passenger Airbag is the passenger airbag decorative cover located just above the front right side of the instrument panel.

The passenger airbag is mounted to the instrument panel assembly. The passenger inflator assembly is within the airbag housing. The airbag is mounted to the instrument panel retainer and support structure.

The Passenger Airbag consists of:

- Dual Initiator Inflator Assembly
- Reaction Canister
- Airbag Pillow
- Passenger Airbag Cover/Door

OPERATION

When supplied with the proper electrical signal from the ORC, the inflator produces gas and discharges it directly into the pillow. The airbag will deploy and the pillow will fully inflate.

REMOVAL

If the airbag has been deployed, the instrument panel and pad assembly must be replaced.

(1) Disconnect and isolate the battery negative remote cable.

(2) Wait two minutes for the system reserve capacitor to discharge before servicing any airbag components.

(3) Open and lower glove box fully to gain access to Passenger Airbag attaching screws inside of the glove box. Glove box removal not required.

(4) Disconnect wire connector from the Passenger Airbag.

(5) Remove the two nuts and two screws attaching airbag assembly to the instrument panel collar. The two nuts are on the outer sides of the passenger airbag, underneath and up near the top of the instrument panel. It is a good idea to remove the center bezel with the HVAC control head to gain access to line up the socket on the stud on the inboard side of the passenger airbag. The two screws are mounted straight through the tabs at the bottom front of the airbag, in the instrument panel reinforcement.

(6) Disengage airbag door tabs from the instrument panel retainer and lift the Passenger Airbag up and out of panel cavity.

INSTALLATION

If replacing Passenger Airbag due to a deployment, use a new instrument panel and pad assembly. Transfer all of the components.

(1) With the battery disconnected, place the Passenger Airbag into the panel cavity. Press the airbag door tabs down to engage on the instrument panel retainer.

(2) Install the two nuts and two screws attaching airbag assembly to the instrument panel collar and torque nuts and screws to 7.5 ± 1 N·m (66 in. lbs.). The two nuts are on the outer sides of the passenger airbag, underneath up near the top of the instrument panel. The two screws are mounted straight through the tabs at the bottom front of the airbag, in the instrument panel reinforcement.

(3) Connect Passenger Airbag wire connector.

(4) Pinch in on sides of the glove box and raise it up into the instrument panel opening.

WARNING: DO NOT CONNECT THE BATTERY NEGATIVE CABLE. REFER TO ELECTRICAL, RESTRAINTS, DIAGNOSIS AND TESTING - AIRBAG SYSTEM FIRST.

REAR SEAT BELT BUCKLE - JR27 ONLY

REMOVAL

(1) Remove rear seat cushion. Refer to Body, Seats, Rear Seat Cushion, Removal.

(2) Remove nuts holding seat belt buckle assembly to floor pan.

(3) Remove rear seat belt buckle assembly.

INSTALLATION

(1) Position rear seat belt buckle assembly onto studs on floor pan.

(2) Install nuts holding rear seat belt buckle assembly to floor pan. Torque rear seat belt buckle assembly nuts to 60 N·m (44 ft. lbs.).

(3) Install rear seat cushion. Refer to Body, Seats, Rear Seat Cushion, Installation.

REAR SEAT BELT & RETRACTOR - JR27 ONLY

REMOVAL

(1) Disconnect and isolate the battery negative cable.

(2) Remove rear seat cushion. Refer to Body, Seats, Rear Seat Cushion, Removal.

(3) Remove rear seat back. Refer to Body, Seats, Rear Seat Back, Removal.

(4) Remove quarter trim panel. Refer to Body, Interior, Lower Quarter Trim Panel, Removal.

(5) Remove bolt attaching seat belt anchor to floor pan (Fig. 4).

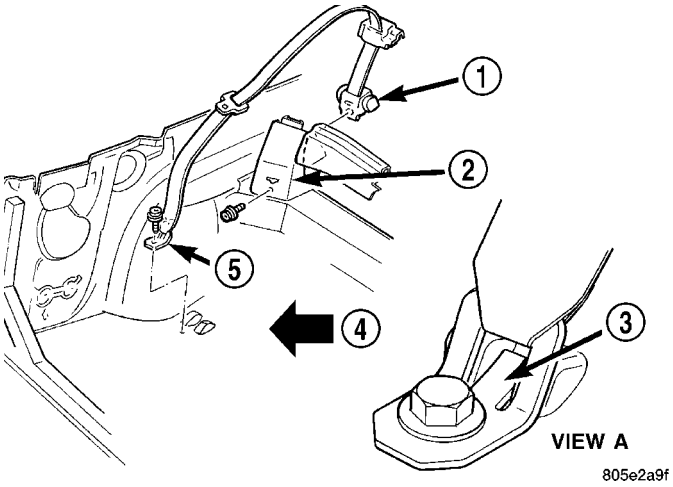

Fig. 4 REAR SEAT BELT AND RETRACTOR

1 - SEAT BELT RETRACTOR
2 - REAR SEAT BELT SUPPORT
3 - TAB
4 - A
5 - LOWER ANCHOR

(6) Remove bolt attaching seat belt retractor to rear seat support assembly.

(7) Remove rear seat belt and retractor assembly from vehicle.

INSTALLATION

(1) Position rear seat belt and retractor assembly to rear seat support assembly.

(2) Engage hook on seat belt retractor to slot in rear seat support assembly.

(3) Install bolt attaching seat belt retractor to rear seat support assembly. Tighten seat belt fastener to 40 N·m (350 in. lbs.) torque.

(4) Route seat belt through channel and snap bezel onto top of channel.

(5) Install bolt attaching seat belt anchor to floor pan. Tighten seat belt fastener to 40 N·m (350 in. lbs.) torque.

(6) Verify that seat belt is not twisted when engaged to seat belt buckle and that the tab on the lower seat belt anchor is between the formations on the floor pan (Fig. 4).

(7) Install quarter trim panel. Refer to Body, Interior, Lower Quarter Trim Panel, Installation.

(8) Install rear seat back. Refer to Body, Seats, Rear Seat Back, Installation.

(9) Install rear seat cushion. Refer to Body, Seats, Rear Seat Cushion, Installation.

(10) Connect the battery negative cable.

SATELLITE ACCELERATION SENSOR

DESCRIPTION

Vehicles equipped with side impact airbags use two Satellite Acceleration Sensors (SAS). One is located on each respective side body B-pillar.

OPERATION

The Satellite Acceleration Sensor (SAS) provides verification of the direction and severity of the side impact to the Occupant Restraint Controller (ORC). The ORC controls both the right and the left side curtain airbags. In the event of a side impact the ORC will send an electronic signal to deploy the appropriate curtain airbag. The SAS periodically transmit the acceleration data to the ORC by modulation of the current on the power supply.

The accelerometer pulses are sent to a microprocessor, which contains a decision algorithm. When an impact is severe enough to require airbag protection, the ORC microprocessor sends a signal to deploy the side airbag that completes the electrical circuits to the right or left side airbag. The ORC is calibrated for the specific vehicle and reacts to the severity and direction of the impact.

REMOVAL

(1) Disconnect and isolate the battery negative cable remote terminal.

(2) Wait two minutes for the system reserve capacitor to discharge before servicing any airbag components.

(3) Remove the lower B-pillar trim from the appropriate side of the vehicle. Refer to Body, Interior, B-Pillar Lower Trim, Removal.

(4) Disconnect the satellite acceleration sensor (SAS) electrical connector.

(5) Remove the SAS retaining screws and remove the sensor from the vehicle.

SATELLITE ACCELERATION SENSOR (Continued)

INSTALLATION

(1) Position the satellite acceleration sensor (SAS) in B-pillar (electrical connector facing forward in vehicle) and install the retaining screws. Torque the screws to 7 N·m (62 in. lbs.).

(2) Connect the SAS electrical connector.

(3) Install the lower B-pillar trim. Refer to Body, Interior, B-Pillar Lower Trim, Installation.

WARNING: DO NOT CONNECT THE BATTERY NEGATIVE CABLE REMOTE TERMINAL. REFER TO ELECTRICAL, RESTRAINTS, DIAGNOSIS AND TESTING - AIRBAG SYSTEM FIRST.

SEAT BELT CONTROL TIMER MODULE - JR27 - EXPORT

DESCRIPTION

The Seat Belt Control Timer Module (SCTM) is located below the drivers seat underneath the floor carpeting. It is a black plastic box, containing electronics for the Structural Seat Belt System.

The SCTM contains an electromechanical Gravity (G)-sensor and an electronic timer circuit. The SCTM receives hard wired external inputs from the ignition switch and both door ajar switches. The SCTM monitors the external inputs, as well as the inputs from its internal timer and G-sensor. In response to those inputs from its internal, the SCTM controls hard wired battery voltage outputs to both electric front seat belt retractor latch solenoids.

OPERATION

This belt system attaches to a reclinable seat back so the traditional locking pendulum mechanism would not provide security. A solenoid was designed to lock the belt and was made part of each of the retractor mechanisms to each seat back. An impact sensor deactivates the solenoids. The impact sensor is a component of the Seat Belt Control Timer Module (SCTM) located under the drivers seat.

The G-Sensor is sensitive to frontal impact and to a roll or pitch more than 45 degrees and to acceleration or deceleration equal to or greater than 0.7 G's in any direction.

Since the retractor is mounted on a seat back that can recline, a typical seat belt g-sensor cannot be used in the retractor. Instead, a solenoid inside the retractor is used to lock and unlock the seat belt when electrically signaled by a g-sensor. The seat belt retractor solenoid is located in the seat back and is serviced with the seat back, as an assembly.

When the solenoids are powered, the seat belt can be moved. When the solenoids are not powered, the seat belts cannot be extracted. This is necessary to ensure that occupants are always safe, even in the case of a power loss during an accident. Whether the seat belts are in lock or unlock position, an occupant can always release the seat belt and it will retract.

The SCTM controls the power to the seat belt solenoids. It supplies power continuously to the seat belts whenever the ignition key is in the RUN or ACCESSORY position. The module has two other unique functions that of a timer and a g-sensor.

The SCTM was designed with a timer function so that when the vehicle is not in use, the battery would not be prematurely drained. The module times out after approximately 30 minutes if no inputs are sent to the module. The module will power the seat belts for a set period of time there is an input from:

- Either door ajar switch (open or closed).
- Ignition switch moved from RUN or ACCESSORY to the OFF position.

Each time one of these inputs occur, the timer is reset to keep the belts powered for 30 minutes.

The G-Sensor function of the SCTM will cut power to the seat belt whenever:

- The vehicle accelerates or decelerates at a rate greater than or equal to 0.7 G's in any direction.
- The vehicle is tilted to an angle greater than or equal to 45 degrees.

Input of the ignition switch in the RUN or ACCESSORY position will cause the module to power the seat belts as long as the condition exists.

The SCTM incorporates limited diagnostics. The detectable faults include:

- Solenoid shorted to ground.
- Solenoid open.
- Solenoid shorted to battery.
- Internal fault.
- No acceleration within the last 10 timer cycles.

Faults are communicated to the seat belt lamp via a single fault line to the Body Control Module (BCM). The BCM communicates the fault on the bus to the cluster lamp.

DIAGNOSIS AND TESTING - SEAT BELT CONTROL TIMER MODULE

The Seat Belt Control Timer Module (SCTM) is connected to the Body Control Module (BCM). Problems with the circuitry will be indicated by the seat belt warning indicator lamp.

When the G-Sensor is at rest, current flows to the solenoids holding them back. The seat belt is movable. When the sensor reacts to the force of impact, it stops current flow to the solenoids. The solenoids close in milliseconds, locking the seat belts.

SEAT BELT CONTROL TIMER MODULE - JR27 - EXPORT (Continued)

The timer allows current to flow through the sensor and the solenoids for 30 minutes after the ignition is turned OFF. The 30 minute limit stops excessive battery drain while the engine is not running.

Connected to the Door Ajar switches, the timer closes the circuit when a door opens and holds for 30 minutes after the door closes with the ignition OFF. This is necessary so the seat belts can be managed after the ignition has been OFF for more than 30 minutes. Turning the key to the ACCESSORY, RUN, or RUN/START position will also cause the timer to activate the solenoids.

DIAGNOSTIC MODE

For service purposes, the 30 minute timer can be reduced to 30 seconds by:

(1) turning the ignition switch OFF.

(2) Close the drivers door.

(3) Cycle the ignition switch (key ON - key OFF) three times.

(4) Open and close the drivers door three times.

NOTE: If the vehicle is tilted to a 45 degree angle, or if it is subjected to acceleration or deceleration of 0.7 G's or more in any direction, the G-Sensor will lock the seat belts.

DETECTABLE FAULTS

The SCTM affords limited diagnostic capability including:

- Solenoid shorted to ground.
- Solenoid open.
- Solenoid shorted to battery.
- Internal fault.
- No acceleration within the last 10 timer cycles (one timer cycle - key ON plus 30 minute minimum key OFF).

The seat belts themselves can demonstrate problems such as:

- Both locked all the time.
- Both locked with the ignition OFF, but not timed out.
- Both seat belts function properly when the ignition is ON or the driver door is opened, but not when the driver door is opened.
- Both seat belts function properly when the ignition is ON or the driver door is opened but not when the passenger door is opened.
- Driver seat belt locked, passenger seat belt unlocked.
- Passenger seat belt locked, driver seat belt unlocked.

These problems can be diagnosed using a Digital Volt/Ohm Meter (DVOM). Refer to Wiring Diagrams and the proper Body Diagnostic Procedures manual.

SCTM CONDITIONS

CAUTION: Do not disconnect or connect the SCTM while the battery is connected.

NOTE: If the SCTM is required to be in the "Sleep" mode for testing, remove the 20 amp seat belt maxi-fuse in the Power Distribution Center (PDC) for one minute. This will allow the SCTM to time out. Reinstall the fuse after one minute to proceed with testing.

BOTH SEAT BELTS LOCKED ALL THE TIME.

(1) Turn the ignition switch to the ACCESSORY position to ensure power to the SCTM and the module will not time out.

(2) Using a DVOM, check for battery voltage at pin 4 and 5 of the SCTM 13-way connector. If no voltage is present, go to Step 3. If voltage is present, go to Step 6.

(3) Check fuse 13 in the PDC and fuse 15 in the Junction Block. If fuses are OK, go to Step 5. If either fuse is blown, replace. If fuse blows again, go to Step 4.

(4) Disconnect the SCTM 13-way connector and replace fuse. Check for fuse to blow. If fuse blows, check circuit for shorts to ground between the SCTM and the fuse. If fuse does not blow, connect the SCTM 13-way connector and if the fuse blows, check for shorts to ground between the SCTM and the seat belt solenoid. Repair as necessary.

(5) If the voltage is OK, go to Step 6. If no voltage is detected, check for an open circuit between fuse and SCTM. Repair as necessary.

(6) Check for voltage a the seat belt solenoid 13-way connector under the seat. If OK, test solenoid(s) for voltage. If no voltage is present, check for an open circuit between the SCTM and the seat belt connector. If OK, replace the SCTM. If not OK, repair circuit as necessary.

BOTH SEAT BELTS LOCKED WITH THE IGNITION SWITCH IN THE OFF POSITION, AND THE SCTM NOT TIMED OUT.

With either door open, ensure that the timer has not timed out.

(1) Using a DVOM, check for battery voltage at pin 5 of the SCTM 13-way connector. If no voltage is present, go to Step 2. If voltage is present, go to Step 5.

(2) Check fuse 13 in the PDC and fuse 15 in the Junction Block. If fuses are OK, go to Step 4. If fuses are not OK, replace fuse(s). If fuse blows again, go to Step 3.

SEAT BELT CONTROL TIMER MODULE - JR27 - EXPORT (Continued)

(3) Disconnect the SCTM 13-way connector and replace fuse. Check if fuse blows. If fuse blows check circuit for shorts to ground between the SCTM and the fuse. If fuse is OK, connect the SCTM and if fuse blows, check for shorts to ground between the SCTM and the seat belt solenoid. Repair as necessary.

(4) If voltage is OK, go to Step 5. If voltage is not present, check for an open circuit between the fuse and the SCTM. Repair as necessary.

(5) Using a DVOM, check from the SCTM 13-way connector, the door ajar switches, and circuits for an open circuit and check for a shorted to ground circuit. If open or shorted circuit, repair as necessary. If OK, replace the SCTM.

BOTH SEAT BELTS LOCK AND UNLOCK WITH THE IGNITION SWITCH ON OR WHEN THE PASSENGER DOOR AJAR SWITCH IS ACTIVATED BUT NOT WHEN THE DRIVER DOOR AJAR SWITCH IS ACTIVATED.

Using a DVOM, check from the SCTM to the driver door ajar switch circuit for an open circuit and for a short to ground. Check pin 2 of the SCTM 13-way connector to ground for continuity. If not continuity, check for an open or shorted circuit and repair as necessary or replace the door ajar switch. If continuity is present, replace the SCTM. The system will function improperly from the effected door.

BOTH SEAT BELTS LOCK AND UNLOCK WITH THE IGNITION SWITCH ON OR WHEN THE DRIVER DOOR AJAR SWITCH IS ACTIVATED BUT NOT WHEN THE PASSENGER DOOR AJAR SWITCH IS ACTIVATED.

Using a DVOM, check from the SCTM to the passenger door ajar switch circuit for an open or short to ground. Check pin 3 of the SCTM 13-way connector to ground for continuity. If no continuity, check for open or shorted circuit and repair as necessary or replace door ajar switch. If OK, replace the SCTM. System will function improperly from the effected door.

DRIVER SEAT BELT LOCKED, PASSENGER SEAT BELT UNLOCKED.

Using a DVOM, check the seat belt solenoid from pin 7 of the SCTM to ground for a reading of 50-60 Ω. If OK, replace the SCTM. If not OK, check for an open or shorted ground circuit and repair as necessary. Or replace the seat belt retractor if the open or shorted circuit is in the solenoid. **The retractor is integral to the seat back and the entire seat back must be replaced if the retractor found to be defective.**

PASSENGER SEAT BELT LOCKED, DRIVER SEAT BELT UNLOCKED.

Using a DVOM, check the seat belt solenoid from pin 8 of the SCTM to ground for a reading of 50-60 Ω. If OK, replace the SCTM. If not OK, check for an open or shorted ground circuit and repair as necessary. Or replace the seat belt retractor if the open or shorted circuit is in the solenoid. **The retractor is integral to the seat back and the entire seat back must be replaced if the retractor is found to be defective.**

REMOVAL

(1) Adjust the drivers seat to its full forward position.

(2) Disconnect and isolate the battery negative remote cable.

(3) Using a razor knife or equivalent, cut the carpet a small amount (about an inch or so) to access the Seat Belt Control Timer Module (SCTM).

(4) Disconnect the electrical connector.

(5) Remove the two screws retaining the SCTM.

(6) Remove the SCTM from the vehicle.

INSTALLATION

(1) Install the SCTM into the vehicle.

(2) Install the two screws retaining the SCTM.

(3) Connect the electrical connector.

(4) Connect the battery negative remote cable.

(5) Adjust the drivers seat to its desired position.

SEAT BELT HEIGHT ADJUSTER

REMOVAL

(1) Remove adjuster knob and turning loop cover.

(2) Remove bolt attaching turning loop to belt height adjuster.

(3) Remove upper B-pillar trim panel.

(4) Remove bolt attaching seat belt height adjuster to B-pillar.

(5) Remove seat belt height adjuster from vehicle.

INSTALLATION

(1) Place seat belt height adjuster into position.

(2) Install two bolts attaching seat belt height adjuster to B-pillar. Torque bolts to 40 ± 8 N·m (29.5 ± 6 ft. lbs.).

(3) Install upper B-pillar trim panel.

(4) Install the bolt attaching the turning loop to the height adjuster. Torque bolt to 40 ± 8 N·m (29.5 ± 6 ft. lbs.).

(5) Install turning loop cover and adjuster knob.

SEAT BELT HEIGHT ADJUSTER (Continued)

TAPPING PLATE REPAIR

The Tapping Plate used to mount the seat belt height adjuster is designed to deform outboard during certain significant vehicle crash events. Should a deformed tapping plate be found on a damaged vehicle that is to be repaired, the following procedure can be used to reposition the tapping plate relative to the B-pillar, thus enabling replacement of the seat belt height adjuster.

(1) Using a large diameter screw socket as a spacer, hand start a three inch 7/16–20 bolt and washer into the threaded tapping plate hole.

(2) Continue to apply bolt torque and deform the tapping plate back flush with the B-pillar inner.

SEAT BELT - REAR INBOARD

REMOVAL

(1) Remove rear seat cushion.

(2) Remove nut attaching seat belt to floor (Fig. 5).

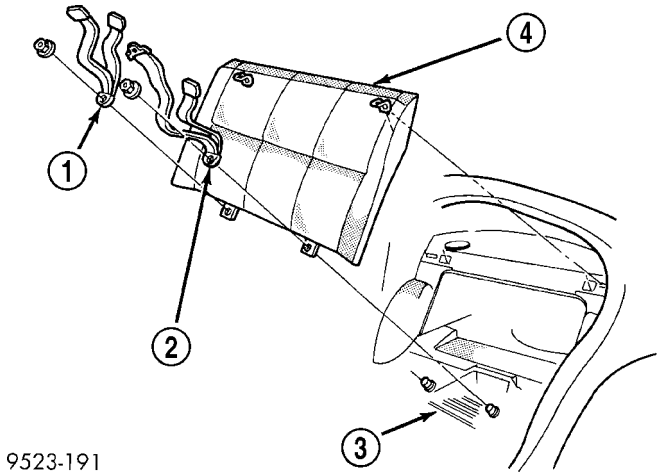

Fig. 5 SEAT BELT - REAR INBOARD

1 - RIGHT REAR SEAT BELT
2 - LEFT REAR SEAT BELT
3 - FLOOR PAN
4 - REAR SEAT BACK

(3) Remove seat belt from vehicle.

INSTALLATION

(1) Place seat belt in position.

(2) Install nut attaching seat belt to floor. Tighten nut to 61 ± 5 N·m (83 ± 5 ft. lbs.) torque.

(3) Install rear seat cushion.

SEAT BELT - REAR OUTBOARD

REMOVAL

(1) Remove rear seat cushion.

(2) Remove bolt attaching seat belt anchor to floor pan.

(3) Remove upper and lower quarter trim panel.

(4) Remove bolt attaching rear D-ring to quarter upper panel.

(5) Remove bolt attaching rear seat belt retractor to inner quarter panel.

(6) Remove retractor and belt from vehicle.

INSTALLATION

(1) Place retractor and belt into position.

(2) Install bolt attaching rear seat belt retractor to inner quarter panel. Torque bolt to 40 N·m (29.5 ft. lbs.).

(3) Route seat belt webbing and D-ring through upper trim panel. Install bolt attaching D-ring to quarter panel. Torque bolt to 40 N·m (29.5 ft. lbs.).

(4) Install upper quarter trim panel.

(5) Install bolt attaching seat belt anchor to floor pan. Torque bolt to 40 N·m (29.5 ft. lbs.).

(6) Install rear seat cushion.

SEAT BELT & RETRACTOR - FRONT OUTBOARD

REMOVAL

Inspect the condition of the shoulder belt and lap belt. Replace any belt that is cut, frayed, torn, or damaged in any way. Also, replace the shoulder belt if the retractor is either damaged or inoperative.

The only component of this seat belt and retractor unit that is available for individual service replacement is the plastic web stop button that prevents the latch plate from falling to the floor while in the stored position. Refer to the instructions supplied with the service kit for the proper web stop button replacement procedures.

(1) Disconnect and isolate the battery negative cable.

(2) Wait two minutes for the system reserve capacitor to discharge before servicing any airbag components.

(3) Remove adjuster knob and turning loop cover.

(4) Remove bolt that attaches the turning loop to the height adjuster.

(5) Remove upper B-pillar trim panel.

(6) Remove the lower B-pillar trim panel.

(7) Disconnect the wire harness connector from the B-pillar retractor.

SEAT BELT & RETRACTOR - FRONT OUTBOARD (Continued)

(8) Remove the bolt attaching the seat belt retractor (and lower anchor) to the base of the B-pillar.

(9) Remove retractor and belt from vehicle.

INSTALLATION

Inspect the condition of the shoulder belt and lap belt. Replace any belt that is cut, frayed, torn, or damaged in any way. Also, replace the shoulder belt if the retractor is either damaged or inoperative.

The only component of this seat belt and retractor unit that is available for individual service replacement is the plastic web stop button that prevents the latch plate from falling to the floor while in the stored position. Refer to the instructions supplied with the service kit for the proper web stop button replacement procedures.

(1) Connect wire harness connector to retractor.

(2) Place retractor and belt assembly into position.

(3) Route belt and install loop, B-pillar trim, and upper B-pillar trim.

(4) Install bolt attaching retractor and anchor to lower B-pillar. Torque bolt to 40 ± 8 N·m (29.5 ± 6 ft. lbs.).

(5) Install the upper B-pillar trim and bolt that attaches the turning loop to the height adjuster. Torque bolt to 55 ± 5 N·m (40.5 ft. lbs.).

(6) Install the turning loop cover and adjuster knob.

(7) Connect the battery negative remote cable.

SEAT BELT & RETRACTOR - REAR CENTER

REMOVAL

Inspect the condition of the shoulder belt and lap belt. Replace any belt that is cut, frayed, torn, or damaged in any way. Also, replace the shoulder belt if the retractor is either damaged or inoperative.

(1) Remove the rear shelf trim panel. Refer to Body, Interior, Rear Shelf Trim Panel, Removal.

(2) Remove the nut attaching the center rear seat belt retractor to the rear shelf.

(3) Remove rear seat cushion.

(4) Remove nut attaching center rearr seat belt anchor to floor pan.

(5) Remove the center rear seat belt retractor assembly from the vehicle.

INSTALLATION

WARNING: INSPECT THE CONDITION OF THE SHOULDER/LAP BELT. REPLACE THE RETRACTOR IF THE BELT IS CUT, FRAYED, TORN, OR DAMAGED IN ANY WAY.

(1) Install the center rear seat belt retractor assembly on the rear shelf. Torque the bolt to 40 N·m (30 ft. lbs.).

(2) Route webbing and bezel through rear shelf trim panel.

(3) Install the rear shelf trim panel. Refer to Body, Interior, Rear Shelf Trim Panel, Installation.

(4) Install the nut attaching the center rear seat belt anchor to the floor pan stud. Be certain the rear seat belts are properly routed to avoid twisted or tangled belts and/or buckles. Torque nut to 40 N·m (30 ft. lbs.).

(5) Install the rear seat cushion.

WARNING: THE REAR SEAT BACK RETAINING NUT ALSO SERVES AS THE CENTER SEAT BELT ANCHOR (Fig. 5). BE CERTAIN TO TORQUE THIS NUT TO 40 N·m (30 ft. lbs.).

SEAT BELT TENSIONER

DESCRIPTION

JR41

The seat belt system incorporates Tensioner Modules. They are integral to the front seat belt retractors and cannot be serviced. If found defective they must be replaced. In the event of an impact, the retractor assembly must be replaced regardless of belt condition. The tensioner is a one time pyrotechnic device.

JR27

The seat belt system incorporates Seat Belt Tensioners. The tensioner is designed to hold the occupant in their respective seat by retracting the seat belt up to four inches. They are integral to the front seat belt buckles and cannot be serviced. If found defective they must be replaced. After an airbag deployment, the tensioner must be replaced.

SEAT BELT TENSIONER (Continued)

OPERATION

JR41

At the onset of an impact event, each tensioner uses a pyrotechnic device which is triggered simultaneously with the front airbags to rapidly retract the seat belts. With the slack removed, the occupant's forward motion in an impact will be reduced as will the likelihood of contacting interior components. After an impact that deploys the airbags, the front seat belt & retractor/tensioner assembly must be replaced.

The Occupant Restraint Controller (ORC) monitors the seat belt tensioner circuit resistance and reports active and stored Diagnostic Trouble Codes (DTC's) if any problem is found.

WARNING: WHEN THE FRONT AIRBAG IS DEPLOYED, THE TENSIONER WILL HAVE DEPLOYED AND MUST BE REPLACED. THIS WILL REQUIRE THE ENTIRE FRONT SEAT BELT & RETRACTOR ASSEMBLY TO BE REPLACED.

JR27

At the onset of an impact event, each tensioner uses a pyrotechnic device which is triggered simultaneously with the airbags to rapidly retract the seat belts. With the slack removed, the occupant's forward motion in an impact will be reduced as will the likelihood of contacting interior components. After an impact that deploys the airbags, the seat belt tensioner assembly must be replaced.

The Occupant Restraint Controller (ORC) monitors the seat belt tensioner circuit resistance and reports active and stored Diagnostic Trouble Codes (DTC's) if any problem is found.

Once a vehicle has been in an accident, the tensioner must be replaced along with any deployed airbags and broken or damaged parts. Refer to the proper Body Diagnostic Procedures manual for diagnosis and testing.

WARNING: WHEN THE FRONT AIRBAG IS DEPLOYED, THE TENSIONER WILL HAVE DEPLOYED ALSO AND MUST BE REPLACED.

SPEED CONTROL

TABLE OF CONTENTS

	page
SPEED CONTROL	
DESCRIPTION	
DESCRIPTION	1
INTERACTIVE SPEED CONTROL	1
OPERATION	2
SPECIFICATIONS - TORQUE	3
SERVO	
DESCRIPTION	3
OPERATION	3
REMOVAL	4
INSTALLATION	4
SWITCH	
REMOVAL	4
INSTALLATION	5
VACUUM RESERVOIR	
DESCRIPTION	5
OPERATION	5
REMOVAL	5
INSTALLATION	6

SPEED CONTROL

DESCRIPTION

DESCRIPTION

The speed control system is electronically controlled and vacuum operated. The electronic control is integrated into the Powertrain Control Module, located on the left side of the engine compartment next to the air cleaner. The controls are located on the steering wheel and consist of a single switch. The ON, OFF, RESUME, ACCEL, SET, COAST, and CANCEL, lever is located on the right of the steering wheel (Fig. 1).

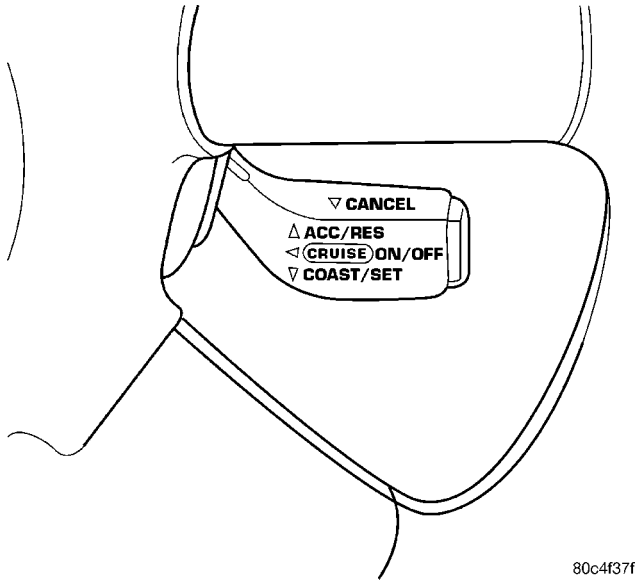

Fig. 1 Speed Control Switch

The system is designed to operate at speeds above 25 mph (40 km/h).

WARNING: THE USE OF SPEED CONTROL IS NOT RECOMMENDED WHEN DRIVING CONDITIONS DO NOT PERMIT MAINTAINING A CONSTANT SPEED, SUCH AS IN HEAVY TRAFFIC OR ON ROADS THAT ARE WINDING, ICY, SNOW COVERED, OR SLIPPERY.

INTERACTIVE SPEED CONTROL

DESCRIPTION

Interactive means that communication between the PCM and the TCM is taking place, this communication is internal to the PCM on NGC vehicles. Interactive speed control avoids unnecessary shifting for smoother, quieter operation and when downshifts are required, makes the shifts smoother.

CLIMBING A GRADE

DESCRIPTION

When climbing a grade the interactive speed control tries to maintain the set speed by increasing the throttle opening, while inability/delaying downshifts.

OPERATION

If opening the throttle alone cannot maintain the set speed and the vehicle speed drops more than three mph below the set speed, the transmission will downshift. If the vehicle continues to lose speed, by more than 6 mph, the transmission will downshift again maintain the set speed. After the vehicle encounters a less-steep grade, or has crested the grade (reduced the load on the powertrain) and can maintain the set speed at a reduced throttle position, the transmission will upshift, as appropriate, until the set speed can be maintained.

SPEED CONTROL (Continued)

DOWNSHIFT DELAY

DESCRIPTION

Downshift delay features have been added to reduce the number and frequency of downshifts when operating in hilly or mountainous country.

OPERATION

While operating, interactive speed control delays or avoids downshifts by allowing up to nearly wide open throttle without the TCM (on SBEC vehicles) (PCM on NGC vehicles) scheduling a downshift. If the interactive speed control is not engaged or the throttle is manually overridden by the driver while interactive speed control is engaged, the downshift delay feature is not activated.

Torque converter lock and unlock shifts are not affected by the downshift delay feature and will occur at the same throttle angle at a given speed regardless of whether interactive speed control operates or not.

GRADE HUNTING

DESCRIPTION

All vehicles equipped with a four speed automatic transmission have a grade hunting feature for the 2nd to 3rd gear upshift and the 3rd to Overdrive upshift.

OPERATION

The TCM (on SBEC vehicles) (PCM on NGC vehicles) identifies the powertrain loading conditions and selects the proper gear to maintain the current vehicle speed. Under moderate loading conditions the transaxle will stay in 3rd gear until the top of the grade is reached or the powertrain loading is reduced.

If powertrain loading is severe, the transaxle may shift into 2nd gear and remain there until powertrain loading is reduced, then a 2nd to 3rd gear upshift will be scheduled. Grade hunting features always operate regardless of whether or not the interactive speed control is engaged. **If the interactive speed control is not engaged and powertrain loading is not reduced, the driver may have to completely lift off of the throttle before an upshift will occur**. If the driver does lift off the throttle to induce an upshift under these conditions, vehicle speed will reduce and the Overdrive to 3rd and 3rd to 2nd gear downshifts will reoccur when the throttle is reapplied. If grade hunting is repeatedly induced by the driver, transaxle damage may result.

AUTOMATIC SPEED CONTROL OVERSPEED REDUCTION

DESCRIPTION

Transmission control software includes an automatic speed control overspeed reduction feature. This maintains vehicle speed at the selected set point when descending a grade.

OPERATION

The TCM (on SBEC vehicles) (PCM on NGC vehicles) first senses that the speed control is set. If the set speed is exceeded by more than 4 mph (6.5 km/hr) and the throttle is closed, the TCM (on SBEC vehicles) (PCM on NGC vehicles) causes the transaxle to downshift to THIRD gear. After downshifting, the automatic speed control resumes normal operation. To ensure that an upshift is appropriate after the set speed is reached, the TCM (on SBEC vehicles) (PCM on NGC vehicles) waits until the speed control system opens the throttle at least 6 degrees before upshifting to OVERDRIVE again.

If the driver applies the brakes, canceling automatic speed control operation with the transaxle still in THIRD gear, the TCM (on SBEC vehicles) (PCM on NGC vehicles) maintains this gear until the driver opens the throttle at least 6 degrees to avoid an inappropriate upshift. The upshift is also delayed for 2.5 seconds after reaching the 6 degrees throttle opening in anticipation that the driver might open the throttle enough to require THIRD gear. This will avoid unnecessary and disturbing transmission cycling. If the automatic speed control RESUME feature is used after braking, the upshift is delayed until the set speed is achieved to reduce cycling and provide better response.

OPERATION

When speed control is activated by depressing the ON switch, the PCM allows a set speed to be stored in RAM for speed control. To store a set speed, depress and release the SET switch while the vehicle is moving at a speed between 30 and 85 mph. In order for the speed control to engage, the brakes cannot be applied, nor can the gear selector be indicating the transmission is in Park or Neutral (ATX) or 1st/2nd gear (MTX). The speed control can be disengaged manually by:

- Stepping on the brake pedal
- Depressing the OFF switch
- Depressing the CANCEL switch.
- Depressing the clutch pedal
- Operating in 1st or 2nd gear (autostick, if equipped)

SPEED CONTROL (Continued)

NOTE: Turning the system off by depressing the OFF switch or turning off the ignition switch will erase the set speed stored in the PCM.

For added safety, the speed control system is programmed to disengage for any of the following conditions:

- An indication of Park or Neutral
- A rapid increase rpm (indicates that the clutch has been disengaged)
- Excessive engine rpm (indicates that the transmission may be in a low gear)
- The speed signal increases at a rate of 10 mph per second (indicates that the co-efficient of friction between the road surface and tires is extremely low)
- The speed signal decreases at a rate of 10 mph per second (indicates that the vehicle may have decelerated at an extremely high rate)
- If the actual speed is greater than 20 mph over the set speed.
- Autostick shifts into 1st or 2nd gear (autostick, if equipped)

Once the speed control has been disengaged, depressing the RESUME switch when speed is greater than 20 mph allows the vehicle to resume control to the target speed that was stored in the PCM.

While the speed control is engaged, the driver can increase the vehicle speed by depressing the ACCEL switch. The new target speed is stored in the PCM when the ACCEL switch is released. The PCM also has a ″tap-up″ feature in which target speed increases by 2 mph for each momentary switch activation of the ACCEL switch. The PCM also provides a means to decelerate to a new lower target speed without disengaging speed control. Depress and hold the COAST switch until the desired speed is reached, then release the switch.

The PCM also has a “Tap Down” feature in which target speed decreases at 1 mph for each momentary switch activation of the coast switch.

SPECIFICATIONS - TORQUE

DESCRIPTION	N·m	Ft. Lbs.	In. Lbs.
Servo Mounting Bracket Nuts	5.1		45
Servo Mounting Nuts	6.7		60
Vacuum Reservoir Screws	10.2		90

SERVO

DESCRIPTION

The servo unit consists of a solenoid valve body, and a vacuum chamber. The solenoid valve body contains three solenoids:

- Vacuum
- Vent
- Dump

The vacuum chamber contains a diaphragm with a cable attached to control the throttle linkage.

OPERATION

The PCM controls the solenoid valve body. The solenoid valve body controls the application and release of vacuum to the diaphragm of the vacuum servo. The servo unit cannot be repaired and is serviced only as a complete assembly.

Power is supplied to the servo by the PCM through the brake switch. The PCM controls the ground path for the vacuum and vent solenoids.

The dump solenoid is energized anytime it receives power. If power to the dump solenoid is interrupted, the solenoid dumps vacuum in the servo. This provides a safety backup to the vent and vacuum solenoids.

The vacuum and vent solenoids must be grounded by the PCM to operate. When the PCM grounds the vacuum servo solenoid, the solenoid allows vacuum to enter the servo and pull open the throttle plate using the cable. When the PCM breaks the ground, the solenoid closes and no more vacuum is allowed to enter the servo. The PCM also operates the vent solenoid via ground. The vent solenoid opens and closes a passage to bleed or hold vacuum in the servo as required.

The PCM cycles the vacuum and vent solenoids to maintain the set speed, or to accelerate and decelerate the vehicle. To increase throttle opening, the PCM grounds the vacuum and vent solenoids. To decrease throttle opening, the PCM removes the grounds from the vacuum and vent solenoids.

SERVO (Continued)

REMOVAL

(1) Disconnect the negative battery cable (Fig. 2).

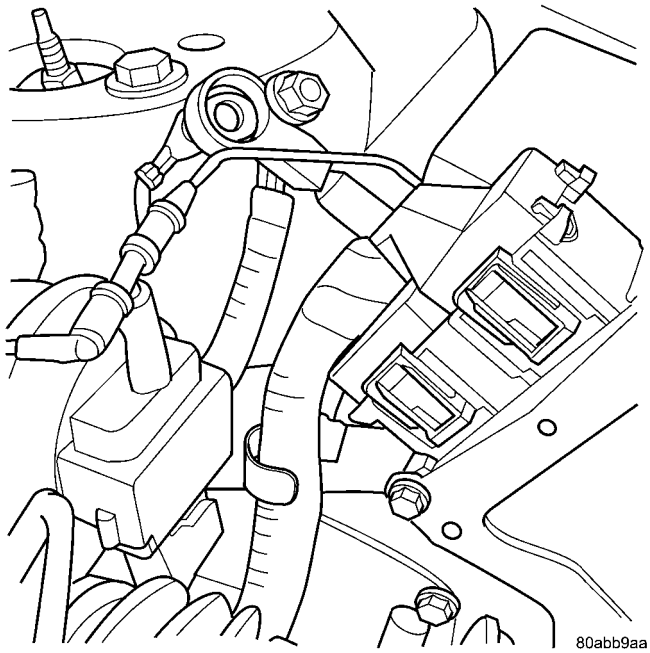

Fig. 2 NEGATIVE BATTERY CABLE

(2) Remove 2 nuts attaching servo bracket to shocktower.

(3) Disconnect electrical connectors and vacuum hose.

(4) Remove two nuts attaching speed control cable and mounting bracket to servo.

(5) Pull cable away from servo to expose retaining clip and remove clip attaching cable to servo (Fig. 3).

(6) Remove servo mounting bracket.

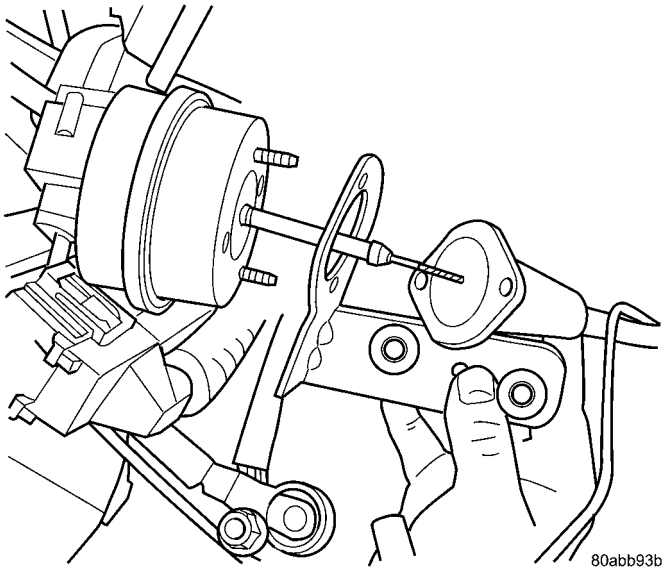

Fig. 3 SPEED CONTROL CABLE AND BRACKET

INSTALLATION

(1) With throttle in full open position feed cable sleeve through hole in bracket, then align hole in speed control cable sleeve with hole in servo pin and install retaining clip (Fig. 3).

(2) Connect vacuum hose to servo.

(3) Connect electrical connector.

(4) Insert servo studs through holes in speed control cable and mounting bracket (Fig. 3).

(5) Install nuts, tighten to 6.7 N·m (60 in. lbs.).

(6) Install servo and bracket to stud plate in shocktower and tighten nuts.

(7) Connect negative battery cable (Fig. 2).

SWITCH

REMOVAL

The speed control switches is mounted in the steering wheel and wired through the clock spring device under the airbag module (Fig. 4).

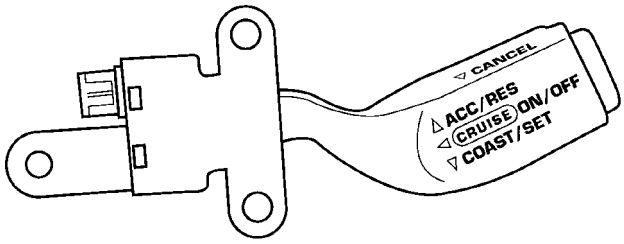

Fig. 4 Speed Control Switch

WARNING: IF REMOVAL OF AIRBAG MODULE IS NECESSARY, REFER TO THE RESTRAINT SYSTEMS.

(1) Remove the negative battery cable.

(2) Turn off ignition.

(3) Remove air bag, refer to the Restraint systems section.

(4) Remove the top mounting screw (Fig. 5).

(5) Rotate steering wheel so that the switch is in the 6 o'clock position. Remove 2 screws from the back side of the speed control switch.

(6) Disconnect the electrical connector.

(7) Remove switch (Fig. 6).

SWITCH (Continued)

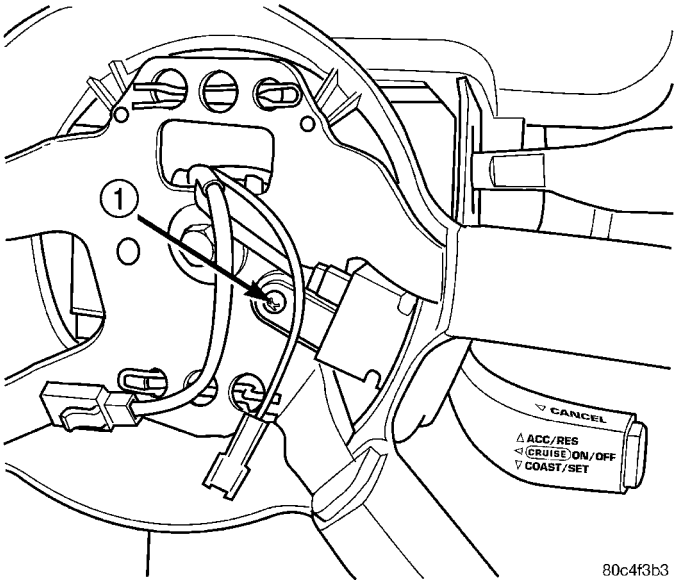

Fig. 5 Switch Top Mounting Screw

1 - TOP MOUNTING SCREW

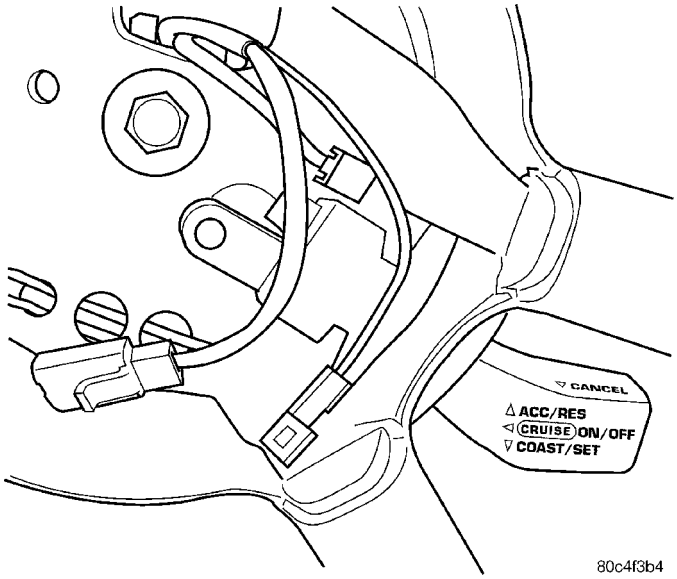

Fig. 6 Switch Removal

INSTALLATION

The speed control switch is mounted in the steering wheel and wired through the clock spring device under the airbag module.

WARNING: IF REMOVAL OF AIRBAG MODULE IS NECESSARY, REFER TO THE RESTRAINT SYSTEMS.

(1) Connect the electrical connector.

(2) Install switch (Fig. 6) and tighten the screws to 1.6 N·m (15 ins. lbs.). Make sure rubber seal is in place around switch.

(3) Install airbag, refer to the Restraint Systems section.

(4) Install the negative battery cable.

VACUUM RESERVOIR

DESCRIPTION

The vacuum reservoir is located under the left front headlamp, in front of the battery. It is made of plastic and does not contain any other parts, such as a check valve.

OPERATION

The reservoir stores engine vacuum. Manifold vacuum is supplied from the brake booster check valve. The speed control vacuum supply hose has a check valve at the source (brake booster) to maintain the highest available vacuum level in the servo, reservoir and vacuum hoses. When engine vacuum drops, as in climbing a grade while driving, the reservoir supplies the vacuum needed to maintain proper speed control operation. The vacuum reservoir cannot be repaired and must be replaced if faulty.

REMOVAL

The vacuum reservoir is located below the left front headlamp (Fig. 7).

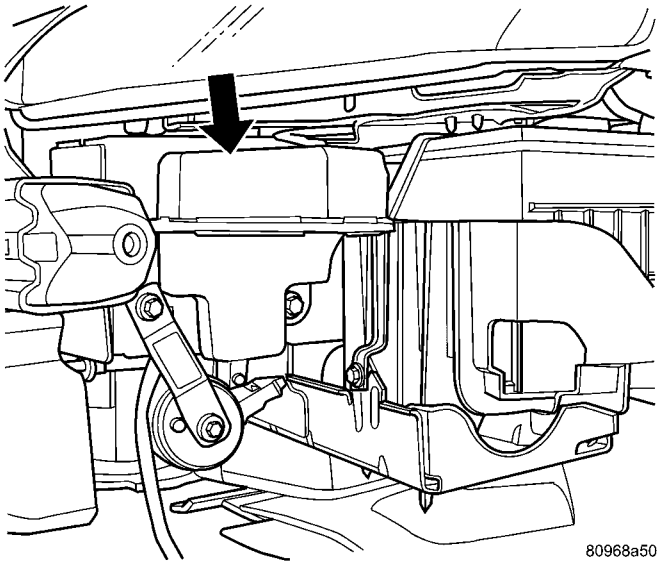

Fig. 7 VACUUM RESERVOIR

(1) Remove the front fascia, refer to the Frames and Bumper/Front Fascia section for more information.

(2) Remove bolt from reservoir.

(3) Disconnect vacuum hose from reservoir.

(4) Remove the vacuum reservoir by sliding it up slightly and seperating the nail head pegs (molded into the reservoir) from the frame rail..

VACUUM RESERVOIR (Continued)

INSTALLATION

(1) Connect vacuum hose to reservoir by inserting nail head pegs on reservoir into the keyhole slots in the frame rail and slide down to lock it into place.

(2) Install the vacuum reservoir (Fig. 7).

(3) Install bolt through to reservoir to frame rail.

(4) Install the front fascia, refer to the Frames and Bumper/Front Fascia section for more information.

VEHICLE THEFT SECURITY

TABLE OF CONTENTS

page

VEHICLE THEFT SECURITY
DESCRIPTION 1
OPERATION 1
DIAGNOSIS AND TESTING
DIAGNOSIS AND TESTING - SENTRY KEY IMMOBILIZER SYSTEM 2
DIAGNOSIS AND TESTING - VEHICLE THEFT SECURITY SYSTEM 3

page

TRANSPONDER KEY
DESCRIPTION 3
OPERATION 3
STANDARD PROCEDURE - TRANSPONDER PROGRAMMING 4
VTSS/SKIS INDICATOR LAMP
DESCRIPTION 5
OPERATION 5

VEHICLE THEFT SECURITY

DESCRIPTION

VEHICLE THEFT SECURITY SYSTEM

The Vehicle Theft Security System (VTSS) is designed to protect against whole vehicle theft. The system monitors vehicle doors, decklid, and ignition action for unauthorized operation. The alarm activates:

- Sounding of the horn
- Flashing of the park and tail lamps
- Flashing of the headlamps

SENTRY KEY IMMOBILIZER SYSTEM

The Sentry Key Immobilizer System (SKIS) is available as a factory-installed option on this vehicle. It is designed to provide passive protection against unauthorized vehicle use by disabling the engine, after two (2) seconds of running, whenever an invalid key is used to start the vehicle. The SKIS is active whenever the ignition is on and does not require any customer intervention. The primary components of the system are the Sentry Key Immobilizer Module (SKIM), Sentry Key (ignition key w/ a transponder molded into the head), indicator light, Body Control Module (BCM), and the Powertrain Control Module (PCM). The SKIM is mounted to the steering column with the molded, integral antenna mounted on the light halo surrounding the ignition lock cylinder. The indicator light, is located in the message center.

OPERATION

VEHICLE THEFT SECURITY SYSTEM

Upon failure of proper Sentry Key Immobilizer Module (SKIM) communication to the Powertrain Control Module (PCM), the PCM will shut off fuel after two seconds of run time. The engine will not start on the key cycle that the failure occurred, a full key down sequence must be performed for the engine to crank again. After six consecutive fuel shut-offs, the engine will no longer crank on subsequent key cycles. The failure must be corrected and a valid communication process between the SKIM and the PCM must occur for the engine to crank and start again.

The electronics for the Vehicle Theft Security System (VTSS) are part of the Body Control Module (BCM). The system is armed when the vehicle is locked using the:

- Power door lock switches (with any door ajar)
- Remote Keyless Entry transmitter.
- Door Cylinder Lock Switches.

For vehicles equipped with SKIS, the doors do not have to be locked to enable the fuel shut off feature.

After the vehicle is locked and the last door is closed, the LED indicator in the cluster will flash quickly for 16 seconds, indicating that arming is in progress. If no monitored systems are activated during this period, the system will arm. The LED will extinguish unless the decklid is open. If the decklid is open, the LED will flash at a slower rate. This indicates that the system is armed.

If fault is detected on any key cylinder input, the LED indicator will remain solid during the arming process, although the system will still arm. If the indicator LED does not illuminate at all upon door closing it indicates that the system is not arming.

Passive disarming occurs upon normal vehicle entry by unlocking either door with the ignition key/ remote transmitter. This disarming will also halt the alarm once it has been activated.

A tamper alert exists to notify the driver that the VTSS had been activated. This alert consists of 3 horn pulses when the vehicle is disarmed.

VEHICLE THEFT SECURITY (Continued)

NOTE: The VTSS will not arm by pushing down the door lock mechanism. This will manually override the system.

For Door Cylinder Lock Switch Removal and Installation, refer to Electrical, Power Locks, Door Cylinder Lock Switch, Removal, and Installation.

If the VTSS is triggered, the horn will pulse, headlamps/marker lamps will flash, and the VTSS warning lamp will flash. If the BCM determines the threat to be false and the VTSS is not triggered again, the system will shut down and rearm itself after three minutes. If a trigger is still active, the alarm will continue for an additional 15 minutes without the horn. The VTSS monitoring portion of the system is split into two sections.

ARMING THE VTSS

(1) With the key removed from the ignition lock and any door open (excluding decklid), actuate one of the following:

- Power door lock button to LOCK,
- Key fob LOCK button
- Door lock key cylinder to locked position.

(2) Close all opened doors. decklid can remain open.

NOTE: If the decklid is open, it will not be secure. Once the decklid is closed, a separate 16 second counter will start. Once 16 seconds has been reached, the decklid will then be secure, providing a VTSS disarm request has not been received during the 16 second decklid arming period.

(3) After the last door is closed, an arming time-out period of sixteen seconds will start, then the VTSS will become armed.

(4) If a 16 second time-out sequence was in process and a new arm signal was actuated, the 16 second time-out will restart from the time of the second actuation.

If the LED indicator does not illuminate at all upon final door closure, it indicates that the system is not arming.

The current VTSS status armed or disarmed shall be maintained in memory to prevent battery disconnects from disarming the system.

TRIGGERING THE VTSS

After the VTSS is armed, the following actions will trigger the alarm:

- Opening any door.
- Turning the ignition to the ON, ACC, or UNLOCK position.
- Opening decklid without first receiving a RKE input or decklid key input.

CAUTION: The VTSS indicator LED will trigger and engine will continue to run if the vehicle is equipped with SKIS and the proper key is used to start the vehicle. This condition will occur if the VTSS has been triggered. If valid key is used, VTSS will disarm

SENTRY KEY IMMOBILIZER SYSTEM

The SKIS includes keys from the factory which are pre-programmed. Each SKIM will recognize a maximum of eight Sentry Keys. If the customer would like to own additional keys other than those provided with the vehicle, they can be purchased from any authorized dealer. These keys must be programmed to the SKIM on the vehicle in order for the system to recognize them as valid keys. This can be done by the dealer with a DRB III® scan tool or by a customer if this feature is available in their market and they have two (2) valid keys already available to them. Refer to the Service Procedures portion of this system for additional details. The SKIS performs a self-test each time the ignition switch is turned to the ON position and will store Diagnostic Trouble Codes (DTC's) if a system malfunction is detected. The SKIS can be diagnosed and any stored DTC's can be retrieved using a DRB III® scan tool as described in the appropriate Body Diagnostic Procedures manual.

DIAGNOSIS AND TESTING

DIAGNOSIS AND TESTING - SENTRY KEY IMMOBILIZER SYSTEM

WARNING: ON VEHICLES EQUIPPED WITH AIRBAGS, REFER TO ELECTRICAL, RESTRAINTS, WARNINGS, BEFORE ATTEMPTING COMPONENT DIAGNOSIS OR SERVICE. FAILURE TO TAKE THE PROPER PRECAUTIONS COULD RESULT IN ACCIDENTAL AIRBAG DEPLOYMENT AND POSSIBLE PERSONAL INJURY.

NOTE: The following tests may not prove conclusive in the diagnosis of this system. The most reliable, efficient, and accurate means to diagnose the Sentry Key Immobilizer System involves the use of a DRB III® scan tool. Refer to the proper Body Diagnostic Procedures manual.

The Sentry Key Immobilizer System (SKIS) and the Programmable Communication Interface (PCI) bus network should be diagnosed using a DRB III® scan tool. The DRB III® will allow confirmation that the PCI bus is functional, that the Sentry Key Immo-

VEHICLE THEFT SECURITY (Continued)

bilizer Module (SKIM) is placing the proper messages on the PCI bus, and that the Powertrain Control Module (PCM) is receiving the PCI bus messages. Refer to the proper Body Diagnostic Procedures manual, and Wiring Diagrams for complete circuit descriptions and diagrams.

(1) Check the fuses in the junction block. If OK, go to Step 2. If not OK, repair the shorted circuit or component as required and replace the faulty fuse.

(2) Disconnect and isolate the battery negative remote cable from the remote terminal. Unplug the wire harness connector at the SKIM. Check for continuity between the ground circuit cavity of the SKIM wire harness connector and a good ground. There should be continuity. If OK, go to Step 3. If not OK, repair the open circuit to ground as required.

(3) Connect the battery negative cable. Check for battery voltage at the fused B(+) circuit cavity of the SKIM wire harness connector. If OK, go to Step 4. If not OK, repair the open circuit to the fuse in the junction block as required.

(4) Turn the ignition switch to the ON position. Check for battery voltage at the fused ignition switch output (run/start) circuit cavity of the SKIM wire harness connector. If OK, use a DRB III® scan tool and the proper Body Diagnostic Procedures manual to complete the diagnosis of the SKIS. If not OK, repair the open circuit to the fuse in the junction block as required.

DIAGNOSIS AND TESTING - VEHICLE THEFT SECURITY SYSTEM

Refer to the appropriate wiring information. The wiring information includes wiring diagrams, proper wire and connector repair procedures, further details on wire harness routing and retention, as well as pin-out and location views for the various wire harness connectors, splices and grounds. Using a DRB III® scan tool. Refer to the proper Body Diagnostic Procedures Manual for test procedures.

TRANSPONDER KEY

DESCRIPTION

The Sentry Key Immobilizer System (SKIS) uses a transponder chip that is integral to each ignition key (Fig. 1) to communicate with the Sentry Key Immobilizer Module (SKIM). Ignition keys are supplied with the vehicle when it is shipped from the factory. The transponder chip is undermolded within the head of the key. This undermold is hidden beneath an overmolded rubber cap.

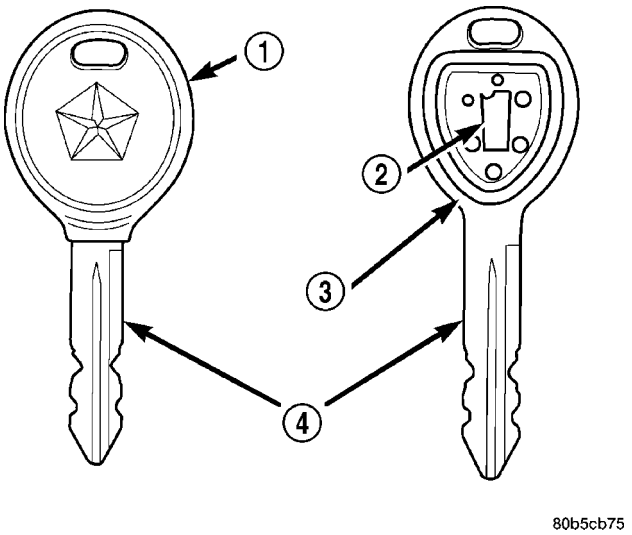

Fig. 1 TRANSPONDER KEY - TYPICAL

1 - MOLDED CAP
2 - TRANSPONDER
3 - MOLDED CAP REMOVED
4 - SENTRY KEY

OPERATION

Each Sentry Key has a unique transponder identification code permanently programmed into it by the manufacturer. Likewise, the SKIM has a unique ″Secret Key″ code programmed into it by the manufacturer as well. When a Sentry Key is programmed into the memory of the SKIM, the SKIM stores the transponder identification code from the Sentry Key, and the Sentry Key learns the ″Secret Key″ code from the SKIM. Once the Sentry Key learns the ″Secret Key″ code of the SKIM, it is also permanently programmed into the transponder's memory. Therefore, blank keys for the SKIS must be programmed by the SKIM in addition to being cut to match the mechanical coding of the ignition lock cylinder. Refer to Electrical, Vehicle Theft Security, Transponder Key, Standard Procedure - Transponder Programming.

The Sentry Key's transponder is within the range of the SKIM's transceiver antenna ring when it is inserted into the ignition lock cylinder. When the ignition switch is turned to the ON position, the SKIM communicates with the Sentry Key via a radio frequency (RF) signal. The SKIM determines if a valid key is present based on the information it receives from the Sentry Key. If a valid key is detected, that fact is communicated to the PCM via the PCI bus and the vehicle is allowed to continue running. If an invalid key is received by the PCM or no status at all is communicated, the vehicle will stall after two (2) seconds of running. The LED indicator will be flashing at this point. The Sentry Key's transponder can not be repaired. If it is faulty or damaged, it must be replaced.

TRANSPONDER KEY (Continued)

Common communication problems:
- Two transponder keys too close together.
- Speed Pass too close to transponder key.

Solid indicator that there is a system failure.
- Loss of PCM communication.
- Failed antenna circuit.

STANDARD PROCEDURE - TRANSPONDER PROGRAMMING

USING A DRB III® SCAN TOOL

All Sentry Keys included with the vehicle are preprogrammed to work with the Sentry Key Immobilizer System (SKIS) when it is shipped from the factory. The Sentry Key Immobilizer Module (SKIM) can be programmed to recognize up to a total of eight Sentry Keys. When programming a blank Sentry Key transponder, the key must first be cut to match the ignition lock cylinder of the vehicle for which it will be used. The vehicle's four digit PIN code will be required to complete this task since you will need it to enter the Secured Access Mode in the SKIM. The following steps must be completed using a DRB III® scan tool:

(1) Insert the blank key into the ignition and turn it to the RUN position.

(2) Using a DRB III® scan tool, select ″Theft Alarm,″ ″SKIM,″ ″Miscellaneous,″ and then ″Program New Key.″

(3) Enter the four digit PIN code using the DRB III® scan tool. When programming is completed, the SKIM will exit Secured Access Mode and the DRB III® scan tool will display the results of your attempt to program the key. One of five distinct results may be displayed. All five are listed below:

- **″Programming Successful″** is displayed if the Sentry Key programming is successful.
- **″Learned Key in Ignition″** is displayed if the key in the ignition has already been programmed into that vehicle's SKIM.
- **″Eight Keys Already Learned (At The Maximum) Programming Not Done″** is displayed if eight keys have already been programmed into the SKIM. In this case, if a new key needs to be added due to a lost or defective key, the ″Erase All Keys″ command (which requires entering the Secured Access Mode) has to be performed. Following the ″Erase All Keys″ command, all keys that will be used to operate the vehicle **MUST** be reprogrammed to the SKIM.
- **″Programming Not Attempted″** is displayed after an ″Erase All Keys″ function is executed.
- **″Programming Key Failed″** is displayed if further diagnosis is required.

To learn additional keys, turn the ignition OFF, remove the learned key, insert the next new blank key, and repeat the steps from the beginning.

"CUSTOMER LEARN" MODE

This feature is only available on domestic vehicles or those which have a U.S. country code designator. This procedure requires access to at least two valid Sentry Keys. If two valid Sentry Keys are not available, Sentry Key programming will require the use of a DRB III® scan tool.

The steps required to program Sentry Keys with two valid Sentry Keys follows:

(1) Obtain the blank Sentry Key(s) that needs to be programmed. Cut the keys to match the ignition lock cylinder mechanical key codes.

(2) Insert one of the two valid Sentry Keys into the ignition switch and turn the ignition switch to the ON position.

(3) After the ignition switch has been in the ON position for longer than three seconds, but no more than fifteen seconds, cycle the ignition switch back to the OFF position. Replace the first valid Sentry Key in the ignition lock cylinder with the second valid Sentry Key and turn the ignition switch back to the ON position. The second valid Sentry Key must be inserted within 15 seconds of removing the first valid Sentry key.

(4) About ten seconds after the completion of Step 3, the VTSS/SKIS indicator will start to flash and a single audible chime tone will sound to indicate that the system has entered the ″Customer Learn″ programming mode.

(5) Within sixty seconds of entering the ″Customer Learn″ programming mode, turn the ignition switch to the OFF position, replace the valid Sentry Key with a blank Sentry Key transponder, and turn the ignition switch back to the ON position.

(6) About ten seconds after the completion of Step 5, a single audible chime tone will sound and the VTSS/SKIS indicator will stop flashing and stay on solid for three seconds and then turn off to indicate that the blank Sentry Key has been successfully programmed. The SKIS will immediately exit the ″Customer Learn″ programming mode and the vehicle may be started using the newly programmed Sentry Key.

TRANSPONDER KEY (Continued)

These steps must be completed in their entirety for each additional Sentry Key to be programmed. If any of the above steps are not completed in the given sequence, or within the allotted time, the SKIS will exit the ″Customer Learn″ programming mode and the programming will be unsuccessful. The SKIS will also automatically exit the ″Customer Learn″ programming mode if:

- It sees a non-blank Sentry Key when it should see a blank.
- If it has already programmed eight (8) valid Sentry Keys.
- If the ignition switch is turned to the OFF position for more than about fifty (50) seconds.

NOTE: If you attempt to start the vehicle while in "Customer Learn" mode (VTSS/SKIS indicator flashing), the vehicle will behave as though an invalid key is being used (i.e. the engine will stall after two (2) seconds of running). No faults will be logged.

NOTE: Once a Sentry Key has been programmed to a particular vehicle, it cannot be used on any other vehicle.

VTSS/SKIS INDICATOR LAMP

DESCRIPTION

The Sentry Key Immobilizer System (SKIS) uses an indicator light to convey information on the status of the system to the customer. This indicator is shared with the Vehicle Theft Security System (VTSS). The VTSS/SKIS indicator is a Light Emitting Diode (LED), and is not serviceable separately. The indicator is located in the Instrument Cluster. The indicator is controlled by the Body Control Module (BCM) based upon messages it receives from the Sentry Key Immobilizer Module (SKIM) on the PCI bus.

OPERATION

When the ignition is turned ON, the Body Control Module (BCM) performs a four second bulb check, regardless of Sentry Key Immobilizer Module (SKIM) messages. After the bulb check, the indicator is controlled according to SKIM messages. Then, the SKIM sends messages to the BCM to operate the indicator based upon the results of the SKIS self tests. The indicator may be actuated in two possible ways, FLASHING or ON SOLID. If the indicator comes ON and stays ON solid after a power-up test, this indicates that the SKIM has detected a system malfunction. If the SKIM detects an invalid key when the ignition switch is moved to the ON position, it sends a message on the PCI bus to the BCM, to flash the indicator. The SKIM can also send a message to flash the indicator and generate a single audible chime at the same time. These two events occurring simultaneously indicate that the SKIS has been placed into the ″Customer Learn″ mode. Refer to Electrical, Vehicle Theft Security, Transponder Key, Standard Procedure - Transponder Programming for more information on the ″Customer Learn″ mode. If the indicator comes on and stays on after the power-up test, diagnosis of the SKIS should be performed using a DRB III® scan tool and the appropriate Body Diagnostic Procedures manual. The LED indicator is not a serviceable component and if found faulty or damaged, the entire instrument cluster must be replaced.

WIPERS/WASHERS

TABLE OF CONTENTS

	page
WIPERS/WASHERS	
DESCRIPTION	1
OPERATION	2
DIAGNOSIS AND TESTING - WINDSHIELD WASHERS	3
WASHER NOZZLE	
REMOVAL	3
INSTALLATION	3
WASHER RESERVOIR	
REMOVAL	3
INSTALLATION	4
WASHER RESERVOIR PUMP	
REMOVAL	4
INSTALLATION	4
WIPER ARMS	
REMOVAL	4
INSTALLATION	4
ADJUSTMENTS - WIPER ARMS	4
WIPER BLADES	
REMOVAL	5
CLEANING	5
INSTALLATION	5
WIPER LINKAGE	
REMOVAL	5
INSTALLATION	5
WIPER MOTOR	
REMOVAL	5
INSTALLATION	6
WIPER MOTOR ASSEMBLY	
REMOVAL	7
INSTALLATION	7

WIPERS/WASHERS

DESCRIPTION

WIPER SYSTEM

The wiper/washer switch is mounted on the right side of the multi-function switch (Fig. 1) on the steering column, behind the steering wheel. The wiper switch is a resistive multiplexed network that provides an input to the Body Control Module (BCM) which then opens/closes the wiper relay.

The wiper system has LOW, HIGH, and INTERMITTENT switch positions. The intermittent wiper

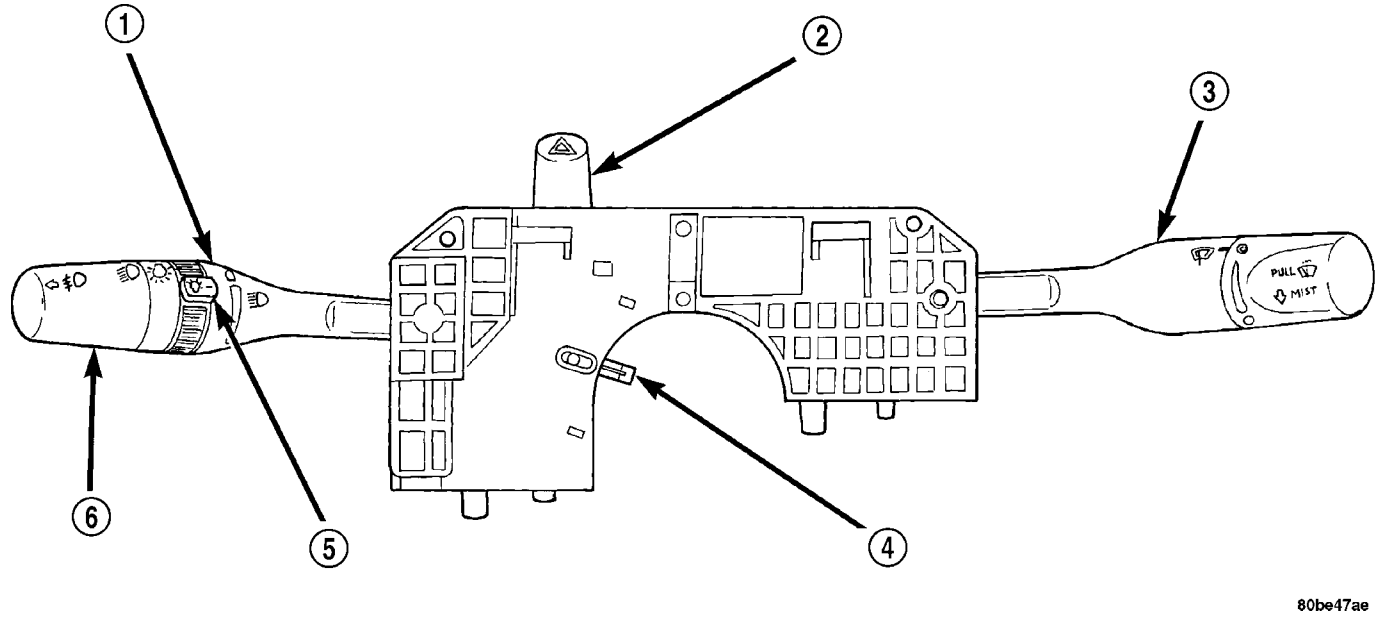

Fig. 1 MULTI-FUNCTION SWITCH WITH INTEGRAL WIPER/WASHER SWITCH

1 - TURN SIGNAL CONTROL STALK
2 - HAZARD WARNING BUTTON
3 - WINDSHIELD WIPER/WASHER CONTROL
4 - CANCELING ACTUATOR
5 - PANEL DIMMER SWITCH
6 - EXTERIOR LIGHTING CONTROL

system, in addition to low and high speeds, has a delay mode and a pulse wipe mode.

The intermittent wiper function is integral to the wiper switch. The wiper switch also includes the MIST feature which provides a single wipe when actuated.

The wiper motor is serviced separately from the wiper assembly. The wiper linkage is crimped onto the assembly and cannot be detached.

The wiper function can be checked using the DRB III® scan tool.

WASHER SYSTEM

This vehicle is equipped with an electrically operated windshield washer pump. The washers are operated by a switch in the multi-function switch control lever (Fig. 1). The lever is located on the right side of the steering column.

The electric pump assembly is mounted directly to the reservoir. A permanently lubricated motor is coupled to an impeller type pump. The pump and reservoir are serviced as separate assemblies.

OPERATION

WIPER SYSTEM

Move the control lever up to select the desired wiper speed. Move the lever upward to the second detent for Low speed wiper operation, or to the third detent for High speed operation.

Use the intermittent wiper when weather conditions make a single wiping cycle, with a variable pause between cycles, desirable. Move the lever to the DEL position, then select the delay interval by turning the end of the lever. The delay can be regulated from a maximum of approximately 18 ± 0.5 seconds between cycles, to a cycle every second ± 0.5 second.

The windshield wipers will only operate with the ignition switch in the ACCESSORY or IGNITION RUN position. The wiper circuit is protected against over loads by a fuse in the junction block. This protects the circuitry of the wiper system and the vehicle. The wiper motor has permanent magnet fields.

The intermittent wiper delay mode has a range of 1 ± 0.5 to 18 ± 0.5 seconds. Pulse wipe is accomplished by holding stalk lever in the WASH position momentarily. The wiper blades then sweep once or twice after the WASH at low speed and then return to the previous wiper switch mode.

The wiper system completes the wipe cycle when the switch is turned OFF. The blades park in the lowest portion of the wipe pattern.

Push down on the wiper lever to activate a single wipe to clear off road mist or spray from a passing vehicle. As long as the lever is held down, the wipers will continue to operate.

WASHER SYSTEM

To use the washer, pull the stalk lever toward you and hold while spray is desired. If the stalk lever is pulled while in the delay range, the wiper will operate for two wipe cycles (± 1) after the stalk lever is released, and then resume the intermittent interval previously selected.

The wash function can be accessed in the OFF position of the wiper control switch. Pulling the washer stalk lever rearward when the switch is in the OFF position will operate the wipers and washer motor pump continuously until the stalk lever is released. Releasing the stalk lever will stop the washer pump but the wipers will complete the current wipe cycle followed by an average of two more wipe cycles (± 1) before the wipers park and the module turns off.

If the stalk lever is pulled while in the OFF position, the wipers will operate for two wipe cycles, then turn OFF.

Fluid, gravity fed from the reservoir, is forced by the pump through rubber hoses to the hood mounted nozzles which direct the fluid streams to the windshield.

WIPERS/WASHERS (Continued)

DIAGNOSIS AND TESTING - WINDSHIELD WASHERS

Whenever a windshield washer malfunction occurs, first verify that the windshield washer wire harness is properly connected to all connectors before starting normal diagnosis and repair procedures. Refer to the WINDSHIELD WASHER DIAGNOSIS table.

WINDSHIELD WASHER DIAGNOSIS

CONDITION	POSSIBLE CAUSE	CORRECTION
PUMP RUNS NO FLUID FLOWING.	1. NO FLUID IN THE RESERVOIR.	1. FILL RESERVOIR.
	2. NOZZLE PLUGGED OR FROZEN.	2. THAW AND CHECK FLOW IF BLOCKED
	3. BROKEN, LOOSE OR PINCHED HOSE.	3. CHECK FLOW THROUGH HOSE CONNECTIONS.
	4. FAULTY PUMP.	4. APPLY BATTERY VOLTAGE TO MOTOR TERMINALS, REPLACE IF PUMP DOES NOT RUN.
SYSTEM OPERATES INTERMITTENTLY.	1. LOOSE WIRE CONNECTION.	1. CHECK WIRE CONNECTIONS.
	2. FAULTY SWITCH.	2. DISCONNECT WIRE HARNESS USE VOLTMETER TO CHECK SWITCH.
SYSTEM OUTPUT IS LOW.	1. PINCHED HOSE.	1. CHECK FLOW THROUGH HOSE CONNECTION.
	2. HOSE BLOCKED.	2. DISCONNECT HOSE AT NOZZLE AND Y CONNECTOR. CHECK FOR FLOW. REPLACE AS NECESSARY.

WASHER NOZZLE

REMOVAL

To replace nozzle, disconnect washer fluid hose. Using needle nose pliers, squeeze together the locking tabs on the nozzle and remove.

INSTALLATION

For installing make sure that both locking tabs are securely snapped into position. Connect washer fluid hose. If no washer spray, check fluid hoses for kinks or leaks.

WASHER RESERVOIR

REMOVAL

(1) Disconnect and isolate the battery negative remote cable.

(2) Disconnect washer fluid hose at in-line connector on top of the right shock tower.

(3) Partially remove bumper fascia as needed to gain access to the reservoir. Refer to Frame & Bumpers, Bumpers, Front Fascia, Removal.

(4) Disconnect wire connector from washer pump and harness mounting tab (Fig. 2).

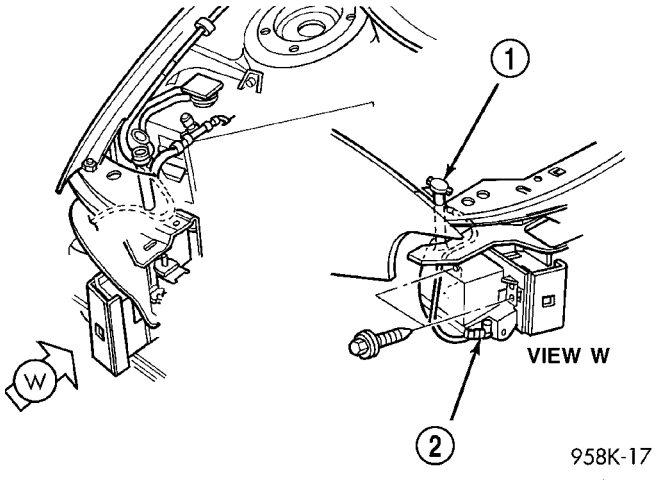

Fig. 2 RESERVOIR REMOVAL

1 - RESERVOIR
2 - WASHER PUMP

(5) Remove washer reservoir mounting bolts.

(6) Slide rearward and drop down and away from vehicle.

WASHER RESERVOIR (Continued)

(7) Drain washer fluid from reservoir into an appropriate container.

(8) Disconnect the washer hose from the reservoir.

INSTALLATION

(1) Connect the washer hose to the reservoir.

(2) Install the washer fluid reservoir.

(3) Connect wire connector to washer pump and harness mounting tab (Fig. 2).

(4) If fascia was partially removed, reinstall bumper fascia as needed. Refer to Frame & Bumpers, Bumpers, Front Fascia, Installation.

(5) Connect washer fluid hose to washer pump on reservior.

(6) Fill washer fluid.

(7) Connect the battery negative remote cable.

WASHER RESERVOIR PUMP

REMOVAL

(1) Disconnect and isolate the battery negative remote cable.

(2) Partially remove the bumper fascia as needed to gain access to the reservoir pump. Refer to Frame & Bumpers, Bumpers, Front Fascia, Removal.

(3) Place a drain bucket below the reservoir to catch any washer solvent that may leak out.

(4) Firmly grasping pump by hand twist and pull away from reservoir and out of grommet. Care must be taken not to puncture reservoir.

(5) Remover rubber grommet from reservoir and throw away.

INSTALLATION

(1) A new grommet is required for installation.

(2) Firmly grasping pump by hand twist and push into reservoir. Care must be taken not to tear grommet or puncture reservoir.

(3) If fascia was partially removed, reinstall bumper fascia as needed. Refer to Frame & Bumpers, Bumpers, Front Fascia, Installation.

(4) Refill reservoir with the washer solvent.

(5) Connect the battery negative remote cable.

WIPER ARMS

REMOVAL

(1) Place the wiper arm/blades in the PARK position and turn ignition OFF.

(2) Unsnap nut cover. By hand rock gently side to side and slide away from arm pivot. To remove the left side raise hood for clearance

(3) Loosen retention nut.

(4) Remove the arm from the pivot by using a universal claw puller or by hand rock gently side to side and slide. Raise blade and arm off glass and rock side to side while applying pressure with the puller till loose.

(5) Remove arm retention nut and arm.

INSTALLATION

(1) Place arm on pivot shaft, align blade with wiper location made on windshield

(2) Start retention nut.

(3) Raise arm and blade off windshield while tightening retention nut. Torque nut to 30 ± 3 N·m (22 ± 2 ft. lbs.).

(4) Install arm nut cover.

ADJUSTMENTS - WIPER ARMS

High speed, wet windshield operation, the right blade tip may override the cowl screen slightly. This is normal and should not affect wiper system performance.

(1) Lift arms and blade assemble to a over centered position.

(2) Turn ignition switch to ON or ACC position.

(3) Use LOW speed setting and cycle the wiper motor to the PARK position.

(4) Turn ignition OFF.

(5) Carefully lower arm and blades to the windshield.

(6) Measure the distance from the blade tip to the cowl screen edge. The blade should be 18 to 42 mm (.75 to 1.60 inches.).

(7) If not OK, check for worn parts.

(8) In the event the blade tip strikes the cowl screen or molding remove arm. Position arm on windshield and torque nut to 30 ± 3 N·m (22 ± 2 ft. lbs.) (Fig. 3).

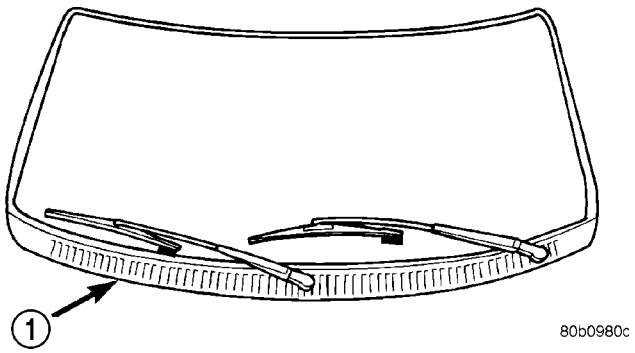

Fig. 3 ARM ADJUSTMENT

1 - COWL SCREEN

WIPER BLADES

REMOVAL

(1) Lift wiper arm to raise blade off glass.

(2) Remove blade assembly from arm by pushing release tab under arm tip and slide blade away from arm tip (Fig. 4) and (Fig. 5).

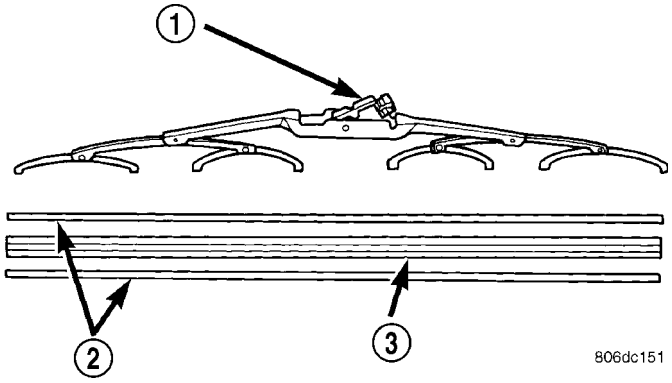

Fig. 4 WIPER BLADE AND ELEMENT

1 - ARM RELEASE TAB
2 - VERTEBRA
3 - RUBBER ELEMENT

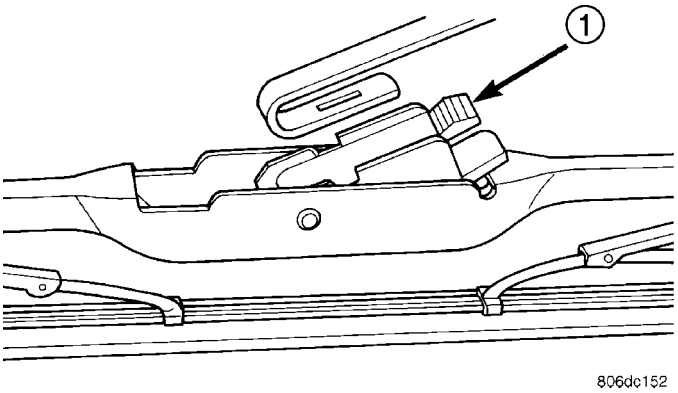

Fig. 5 REMOVE BLADE FROM ARM

1 - RELEASE TAB

(3) The driver's side wiper blade has a air foil on it and the air foil points downward.

(4) Gently place wiper arm tip on windshield.

CLEANING

Wiper blades exposed to the weather for a long period of time tend to lose their wiping effectiveness. Periodic cleaning of the wiper blade is recommended to remove the accumulation of salt and road grime. The wiper blades, arms and windshield should be cleaned with a sponge or cloth and a mild detergent or nonabrasive cleaner. If the wiper blades continue to streak or smear, they should be replaced. The wiper blade should run smoothly across the windshield in both directions. The wiper blade should slightly roll over center when the blade reverses direction. A wiper blade insert that has lost flexibility or a wiper arm that has lost spring tension, will cause the blade to skip or chatter across the windshield. If the wiper blades are new and the wiper arm spring tension is OK and a chattering sound is emitted from the wiper(s), the wiper blade is not rolling over center. If this condition exists, refer to the Wiper Arm Alignment paragraph of this group.

INSTALLATION

(1) Gently lift the wiper arm tip off windshield.

(2) The driver's side wiper blade has a air foil on it and the air foil points downward.

(3) Install the blade assembly onto the wiper arm by firmly snapping it onto the arm tip (Fig. 4) and (Fig. 5).

(4) Lower blade to glass

(5) When complete turn ignition switch ON. Turn wiper switch OFF allowing the wiper blades to PARK. Then turn ignition switch OFF.

WIPER LINKAGE

REMOVAL

(1) Remove wiper arms and blades.

(2) Remove the cowl screen.

(3) Remove wiper motor assembly.

(4) Disconnect wiper arm linkage by using an ball joint/tie rod separator. Separate the right and left ball cap from the ball.

(5) Disconnect drive link from the motor crank. Using an ball joint/tie rod separator and separate the ball cap from the ball.

INSTALLATION

(1) Connect the drive link to the motor crank. If motor output crank nut was removed, tighten nut to 25 to 30 N·m (19 to 23 ft. lbs.).

(2) Align link ball cap over ball and gently press fit against shoulder of cap to lock cap into position.

(3) Install the wiper motor assembly.

(4) Install the cowl screen.

(5) Install the wiper arms.

WIPER MOTOR

REMOVAL

(1) Disconnect and isolate the battery negative cable.

(2) Remove wiper motor assembly (Refer to 8 - ELECTRICAL/WIPERS/WASHERS/WIPER MOTOR ASSEMBLY - REMOVAL).

WIPER MOTOR (Continued)

(3) Remove one retaining nut to linkage crank to motor shaft and remove crank.

(4) Remove the rubber grommet on shaft.

(5) Remove the three retaining bolts to linkage assembly and remove motor.

INSTALLATION

(1) Remove nut and bolts from new motor.

(2) Connect motor to electrical connector, reconnect battery, and cycle motor to park position.

(3) Disconnect negative battery cable and motor electrical connector.

(4) Place motor on linkage assembly and place motor retaining plate over motor shaft.

(5) Install the motor retaining bolts. Torque bolts to 9 ± 1 N·m (80 ± 9 in. lbs.).

(6) Install the motor shaft grommet.

(7) Align the crank with the linkage arm so it is parallel (Fig. 6). The linkage arm will cover the hole in the crank when aligned properly (Fig. 6). Place the crank on the motor shaft and start the nut. Torque the nut to 18 ± 2 N·m (159 ± 18 in. lbs.).

(8) Install the wiper motor assembly (Refer to 8 - ELECTRICAL/WIPERS/WASHERS/WIPER MOTOR ASSEMBLY - INSTALLATION).

(9) Connect the battery negative cable.

(10) Close hood.

(11) Verify vehicle and system operation.

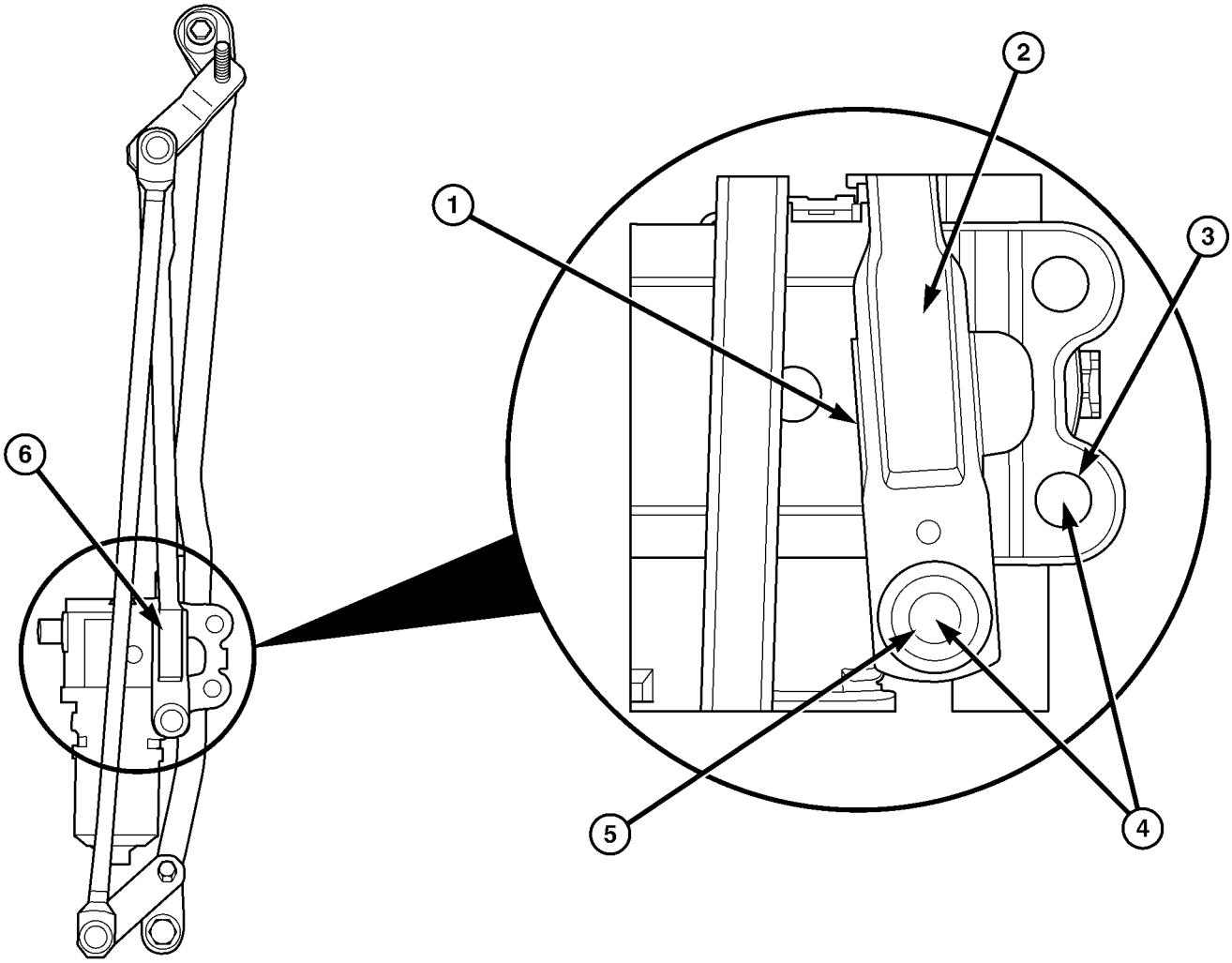

Fig. 6 WIPER MOTOR CRANK ALIGNMENT

1 - WIPER MOTOR CRANK
2 - WIPER LINKAGE
3 - MOTOR RETAINING BOLT TO LINKAGE
4 - CENTER OF BALL STUD TO CENTER OF MOTOR RETAINING BOLT - 27.6 MM
5 - BALL STUD IS ON THE MOTOR CRANK INSIDE THE CAP ON THE LINKAGE.
6 - WIPER MOTOR CRANK AND WIPER LINKAGE SHOULD BE PARALLEL WHEN IN THE PARK POSITION.

WIPER MOTOR ASSEMBLY

REMOVAL

(1) Disconnect and isolate the battery negative remote cable.
(2) Remove wiper arms and blades.
(3) Remove the cowl screen.
(4) Remove the two wiper motor assembly mounting screws then lift assembly to gain access to wire harness clip.
(5) Disconnect harness clip from the forward mounting leg.
(6) Disconnect wire connector at motor and remove assembly.

INSTALLATION

(1) Connect wire connector at motor.
(2) Connect harness clip to the forward mounting leg.
(3) Place assembly into position, install the two mounting bolts, and tighten the mounting bolts to 10 to 12 N·m (89 to 106 in. lbs.) torque.
(4) Install the cowl screen.
(5) Install the wiper arms and blades.
(6) Connect the battery negative remote cable.
(7) Verify vehicle and system operation.
(8) If necessary, adjust wiper arms (Refer to 8 - ELECTRICAL/WIPERS/WASHERS/WIPER ARMS - ADJUSTMENTS).

WIRING

TABLE OF CONTENTS

	page
WIRING DIAGRAM INFORMATION	8W-01-1
COMPONENT INDEX	8W-02-1
POWER DISTRIBUTION	8W-10-1
JUNCTION BLOCK	8W-12-1
GROUND DISTRIBUTION	8W-15-1
BUS COMMUNICATIONS	8W-18-1
CHARGING SYSTEM	8W-20-1
STARTING SYSTEM	8W-21-1
FUEL/IGNITION SYSTEM	8W-30-1
TRANSMISSION CONTROL SYSTEM	8W-31-1
VEHICLE SPEED CONTROL	8W-33-1
ANTILOCK BRAKES	8W-35-1
VEHICLE THEFT SECURITY SYSTEM	8W-39-1
INSTRUMENT CLUSTER	8W-40-1
HORN/CIGAR LIGHTER/POWER OUTLET	8W-41-1
AIR CONDITIONING-HEATER	8W-42-1
OCCUPANT RESTRAINT SYSTEM	8W-43-1
INTERIOR LIGHTING	8W-44-1
BODY CONTROL MODULE	8W-45-1
AUDIO SYSTEM	8W-47-1
REAR WINDOW DEFOGGER	8W-48-1
FRONT LIGHTING	8W-50-1
REAR LIGHTING	8W-51-1
TURN SIGNALS	8W-52-1
WIPERS	8W-53-1
POWER WINDOWS	8W-60-1
POWER DOOR LOCKS	8W-61-1
POWER MIRRORS	8W-62-1
POWER SEAT	8W-63-1
POWER SUNROOF	8W-64-1
POWER TOP	8W-66-1
SPLICE INFORMATION	8W-70-1
CONNECTOR PIN-OUTS	8W-80-1
CONNECTOR/GROUND/SPLICE LOCATION	8W-91-1
POWER DISTRIBUTION	8W-97-1

8W-01 WIRING DIAGRAM INFORMATION

TABLE OF CONTENTS

page

WIRING DIAGRAM INFORMATION
DESCRIPTION
DESCRIPTION - HOW TO USE WIRING DIAGRAMS 1
DESCRIPTION - CIRCUIT INFORMATION 5
DESCRIPTION - CIRCUIT FUNCTIONS 6
DESCRIPTION - SECTION IDENTIFICATION AND INFORMATION 6
DESCRIPTION - CONNECTOR, GROUND AND SPLICE INFORMATION 7
WARNING
WARNINGS - GENERAL 7
DIAGNOSIS AND TESTING - WIRING HARNESS 7
STANDARD PROCEDURE
STANDARD PROCEDURE - ELECTROSTATIC DISCHARGE (ESD) SENSITIVE DEVICES 8
STANDARD PROCEDURE - TESTING OF VOLTAGE POTENTIAL. 9
STANDARD PROCEDURE - TESTING FOR CONTINUITY 9
STANDARD PROCEDURE - TESTING FOR A SHORT TO GROUND 9
STANDARD PROCEDURE - TESTING FOR A SHORT TO GROUND ON FUSES POWERING SEVERAL LOADS 10
STANDARD PROCEDURE - TESTING FOR A VOLTAGE DROP 10
SPECIAL TOOLS
WIRING/TERMINAL 10
CONNECTOR
REMOVAL 11
INSTALLATION 11
DIODE
REMOVAL 14
INSTALLATION 14
TERMINAL
REMOVAL 14
INSTALLATION 14
WIRE
STANDARD PROCEDURE - WIRE SPLICING . . 15

WIRING DIAGRAM INFORMATION

DESCRIPTION

DESCRIPTION - HOW TO USE WIRING DIAGRAMS

DaimlerChrysler Corporation wiring diagrams are designed to provide information regarding the vehicles wiring content. In order to effectively use the wiring diagrams to diagnose and repair DaimlerChrysler Corporation vehicles, it is important to understand all of their features and characteristics.

Diagrams are arranged such that the power (B+) side of the circuit is placed near the top of the page, and the ground (B-) side of the circuit is placed near the bottom of the page (Fig. 1).

All switches, components, and modules are shown in the at rest position with the doors closed and the key removed from the ignition (Fig. 2).

Components are shown two ways. A solid line around a component indicates that the component is complete. A dashed line around the component indicates that the component is being shown is not complete. Incomplete components have a reference number to indicate the page where the component is shown complete.

It is important to realize that no attempt is made on the diagrams to represent components and wiring as they appear on the vehicle. For example, a short piece of wire is treated the same as a long one. In addition, switches and other components are shown as simply as possible, with regard to function only.

SYMBOLS

International symbols are used throughout the wiring diagrams. These symbols are consistent with those being used around the world (Fig. 3).

WIRING DIAGRAM INFORMATION (Continued)

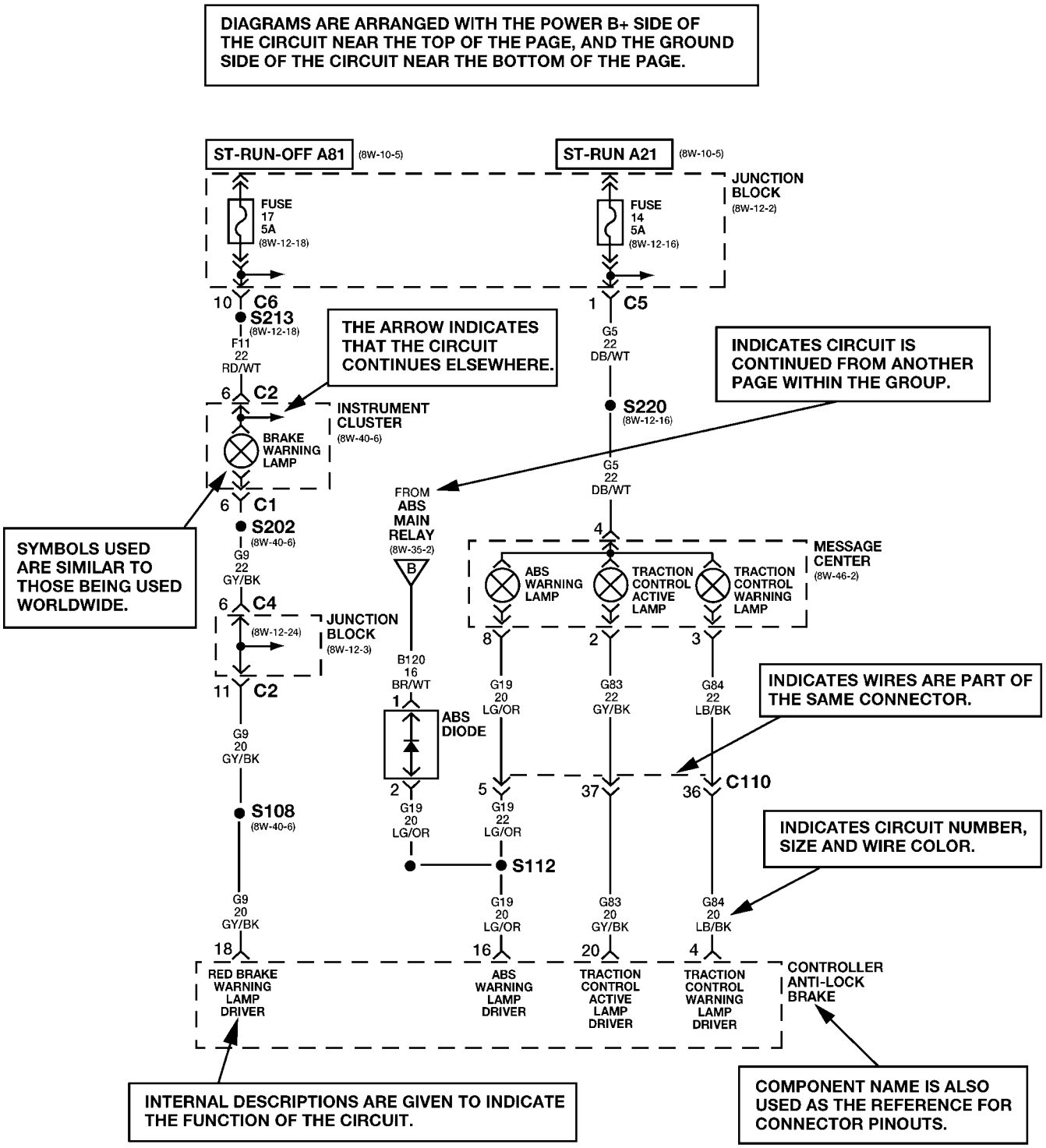

The System shown here is an EXAMPLE ONLY. It does not represent the actual circuit shown in the WIRING DIAGRAM SECTION.

80c06d01

Fig. 1 WIRING DIAGRAM EXAMPLE 1

WIRING DIAGRAM INFORMATION (Continued)

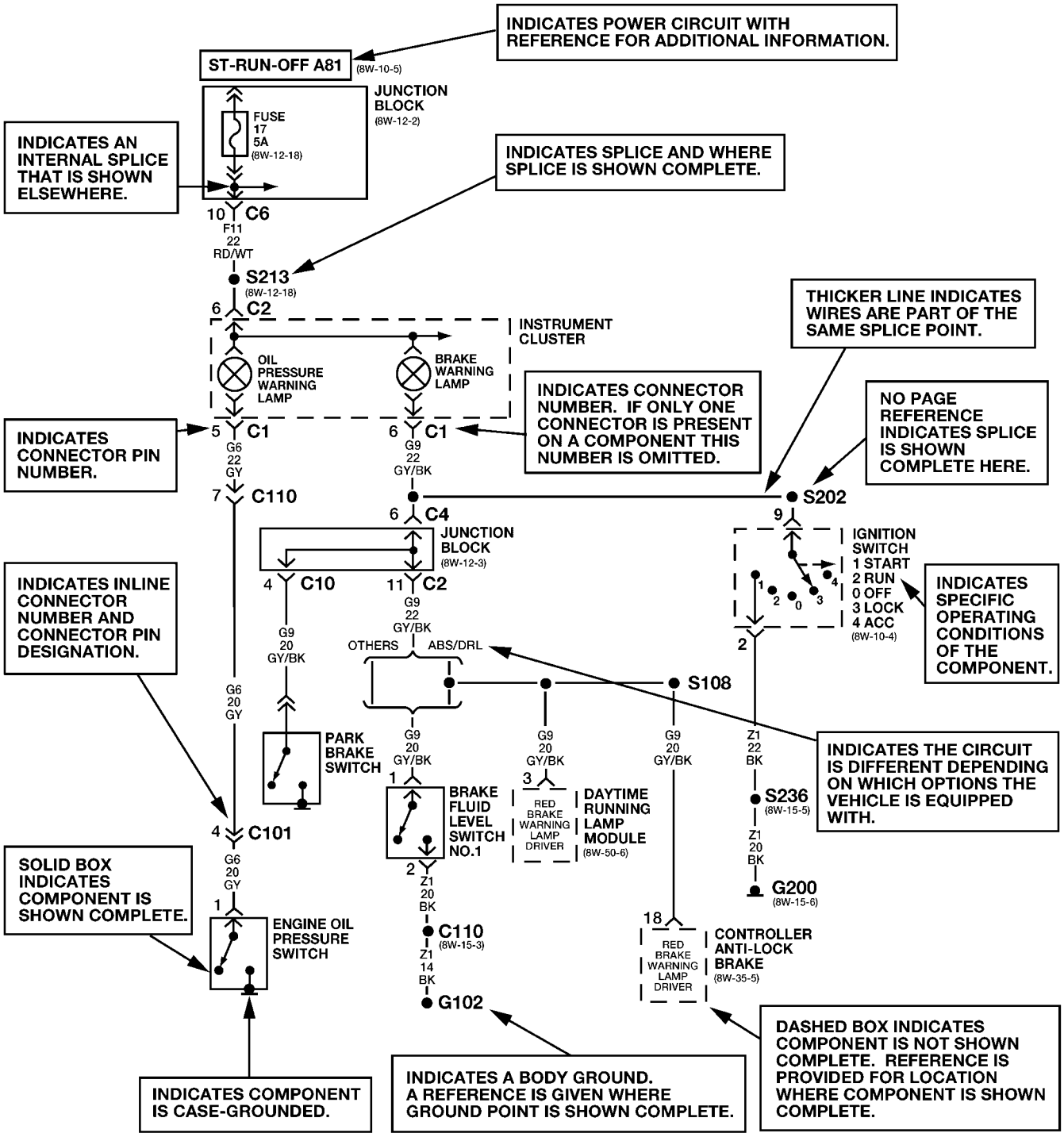

The System shown here is an EXAMPLE ONLY. It does not represent the actual circuit shown in the WIRING DIAGRAM SECTION.

80c06d02

Fig. 2 WIRING DIAGRAM EXAMPLE 2

WIRING DIAGRAM INFORMATION (Continued)

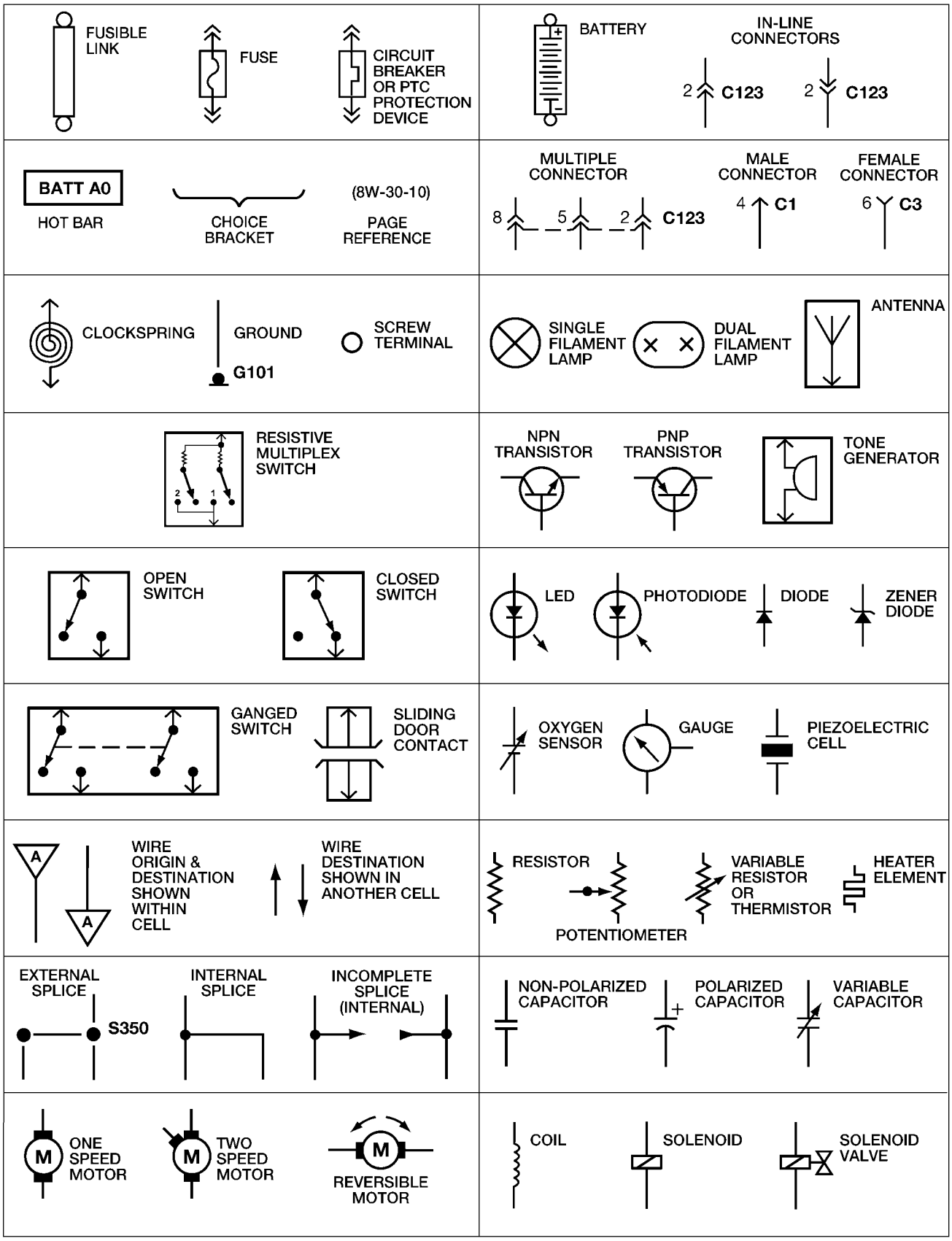

Fig. 3 WIRING DIAGRAM SYMBOLS

WIRING DIAGRAM INFORMATION (Continued)

TERMINOLOGY

This is a list of terms and definitions used in the wiring diagrams.

LHD . . . . . Left Hand Drive Vehicles
RHD . . . . . Right Hand Drive Vehicles
ATX . . Automatic Transmissions-Front Wheel Drive
MTX . . . Manual Transmissions-Front Wheel Drive
AT . . . . Automatic Transmissions-Rear Wheel Drive
MT . . . . . Manual Transmissions-Rear Wheel Drive
SOHC . . . . . Single Over Head Cam Engine
DOHC . . . . . Double Over Head Cam Engine
Built-Up-Export . . . . . Vehicles Built For Sale In Markets Other Than North America
Except Built-Up-Export . Vehicles Built For Sale In North America

DESCRIPTION - CIRCUIT INFORMATION

Each wire shown in the diagrams contains a code which identifies the main circuit, part of the main circuit, gage of wire, and color (Fig. 4).

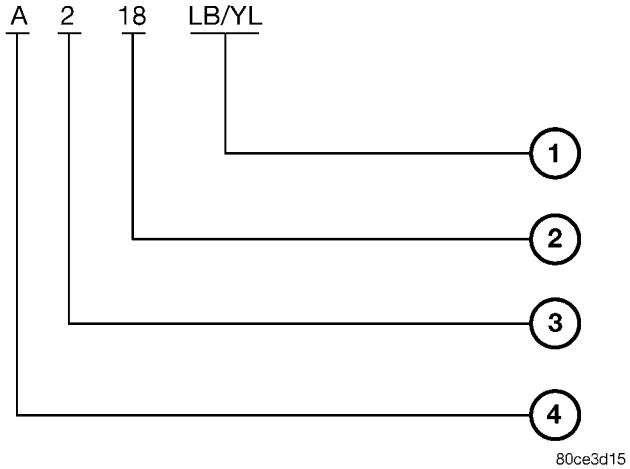

Fig. 4 WIRE CODE IDENTIFICATION

1 - COLOR OF WIRE (LIGHT BLUE WITH YELLOW TRACER
2 - GAGE OF WIRE (18 GAGE)
3 - PART OF MAIN CIRCUIT (VARIES DEPENDING ON EQUIPMENT)
4 - MAIN CIRCUIT IDENTIFICATION

WIRE COLOR CODE CHART

COLOR CODE	COLOR
BL	BLUE
BK	BLACK
BR	BROWN
DB	DARK BLUE
DG	DARK GREEN
GY	GRAY
LB	LIGHT BLUE
LG	LIGHT GREEN
OR	ORANGE
PK	PINK
RD	RED
TN	TAN
VT	VIOLET
WT	WHITE
YL	YELLOW
*	WITH TRACER

WIRING DIAGRAM INFORMATION (Continued)

DESCRIPTION - CIRCUIT FUNCTIONS

All circuits in the diagrams use an alpha/numeric code to identify the wire and it's function. To identify which circuit code applies to a system, refer to the Circuit Identification Code Chart. This chart shows the main circuits only and does not show the secondary codes that may apply to some models.

CIRCUIT IDENTIFICATION CODE CHART

CIRCUIT	FUNCTION
A	BATTERY FEED
B	BRAKE CONTROLS
C	CLIMATE CONTROLS
D	DIAGNOSTIC CIRCUITS
E	DIMMING ILLUMINATION CIRCUITS
F	FUSED CIRCUITS
G	MONITORING CIRCUITS (GAUGES)
H	OPEN
I	NOT USED
J	OPEN
K	POWERTRAIN CONTROL MODULE
L	EXTERIOR LIGHTING
M	INTERIOR LIGHTING
N	NOT USED
O	NOT USED
P	POWER OPTION (BATTERY FEED)
Q	POWER OPTIONS (IGNITION FEED)
R	PASSIVE RESTRAINT
S	SUSPENSION/STEERING
T	TRANSMISSION/TRANSAXLE/ TRANSFER CASE
U	OPEN
V	SPEED CONTROL, WIPER/ WASHER
W	OPEN
X	AUDIO SYSTEMS
Y	OPEN
Z	GROUNDS

DESCRIPTION - SECTION IDENTIFICATION AND INFORMATION

The wiring diagrams are grouped into individual sections. If a component is most likely found in a particular group, it will be shown complete (all wires, connectors, and pins) within that group. For example, the Auto Shutdown Relay is most likely to be found in Group 30, so it is shown there complete. It can, however, be shown partially in another group if it contains some associated wiring.

Splice diagrams in Section 8W-70 show the entire splice and provide references to other sections the splices serves. Section 8W-70 only contains splice diagrams that are not shown in their entirety somewhere else in the wiring diagrams.

Section 8W-80 shows each connector and the circuits involved with that connector. The connectors are identified using the name/number on the diagram pages.

WIRING SECTION CHART

GROUP	TOPIC
8W-01 thru 8W-09	General information and Diagram Overview
8W-10 thru 8W-19	Main Sources of Power and Vehicle Grounding
8W-20 thru 8W-29	Starting and Charging
8W-30 thru 8W-39	Powertrain/Drivetrain Systems
8W-40 thru 8W-49	Body Electrical items and A/C
8W-50 thru 8W-59	Exterior Lighting, Wipers and Trailer Tow
8W-60 thru 8W-69	Power Accessories
8W-70	Splice Information
8W-80	Connector Pin Outs
8W-91	Connector, Ground and Splice Locations

WIRING DIAGRAM INFORMATION (Continued)

DESCRIPTION - CONNECTOR, GROUND AND SPLICE INFORMATION

CAUTION: Not all connectors are serviced. Some connectors are serviced only with a harness. A typical example might be the Supplemental Restraint System connectors. Always check parts availability before attempting a repair.

IDENTIFICATION

In-line connectors are identified by a number, as follows:

- In-line connectors located in the engine compartment are C100 series numbers
- In-line connectors located in the Instrument Panel area are C200 series numbers.
- In-line connectors located in the body are C300 series numbers.
- Jumper harness connectors are C400 series numbers.
- Grounds and ground connectors are identified with a “G” and follow the same series numbering as the in-line connectors.
- Splices are identified with an “S” and follow the same series numbering as the in-line connectors.
- Component connectors are identified by the component name instead of a number. Multiple connectors on a component use a C1, C2, etc. identifier.

LOCATIONS

Section 8W-91 contains connector/ground/splice location illustrations. The illustrations contain the connector name (or number)/ground number/splice number and component identification. Connector/ground/splice location charts in section 8W-91 reference the figure numbers of the illustrations.

The abbreviation T/O is used in the component location section to indicate a point in which the wiring harness branches out to a component. The abbreviation N/S means Not Shown in the illustrations

WARNING

WARNINGS - GENERAL

WARNINGS provide information to prevent personal injury and vehicle damage. Below is a list of general warnings that should be followed any time a vehicle is being serviced.

WARNING: ALWAYS WEAR SAFETY GLASSES FOR EYE PROTECTION.

WARNING: USE SAFETY STANDS ANYTIME A PROCEDURE REQUIRES BEING UNDER A VEHICLE.

WARNING: BE SURE THAT THE IGNITION SWITCH ALWAYS IS IN THE OFF POSITION, UNLESS THE PROCEDURE REQUIRES IT TO BE ON.

WARNING: SET THE PARKING BRAKE WHEN WORKING ON ANY VEHICLE. AN AUTOMATIC TRANSMISSION SHOULD BE IN PARK. A MANUAL TRANSMISSION SHOULD BE IN NEUTRAL.

WARNING: OPERATE THE ENGINE ONLY IN A WELL-VENTILATED AREA.

WARNING: KEEP AWAY FROM MOVING PARTS WHEN THE ENGINE IS RUNNING, ESPECIALLY THE FAN AND BELTS.

WARNING: TO PREVENT SERIOUS BURNS, AVOID CONTACT WITH HOT PARTS SUCH AS THE RADIATOR, EXHAUST MANIFOLD(S), TAIL PIPE, CATALYTIC CONVERTER AND MUFFLER.

WARNING: DO NOT ALLOW FLAME OR SPARKS NEAR THE BATTERY. GASES ARE ALWAYS PRESENT IN AND AROUND THE BATTERY.

WARNING: ALWAYS REMOVE RINGS, WATCHES, LOOSE HANGING JEWELRY AND AVOID LOOSE CLOTHING.

DIAGNOSIS AND TESTING - WIRING HARNESS

TROUBLESHOOTING TOOLS

When diagnosing a problem in an electrical circuit there are several common tools necessary. These tools are listed and explained below.

- Jumper Wire - This is a test wire used to connect two points of a circuit. It can be used to bypass an open in a circuit.

WARNING: NEVER USE A JUMPER WIRE ACROSS A LOAD, SUCH AS A MOTOR, CONNECTED BETWEEN A BATTERY FEED AND GROUND.

- Voltmeter - Used to check for voltage on a circuit. Always connect the black lead to a known good ground and the red lead to the positive side of the circuit.

CAUTION: Most of the electrical components used in today’s vehicles are Solid State. When checking voltages in these circuits, use a meter with a 10 - megohm or greater impedance rating.

WIRING DIAGRAM INFORMATION (Continued)

• Ohmmeter - Used to check the resistance between two points of a circuit. Low or no resistance in a circuit means good continuity.

CAUTION: Most of the electrical components used in today's vehicles are Solid State. When checking resistance in these circuits use a meter with a 10 - megohm or greater impedance rating. In addition, make sure the power is disconnected from the circuit. Circuits that are powered up by the vehicle's electrical system can cause damage to the equipment and provide false readings.

• Probing Tools - These tools are used for probing terminals in connectors (Fig. 5). Select the proper size tool from Special Tool Package 6807, and insert it into the terminal being tested. Use the other end of the tool to insert the meter probe.

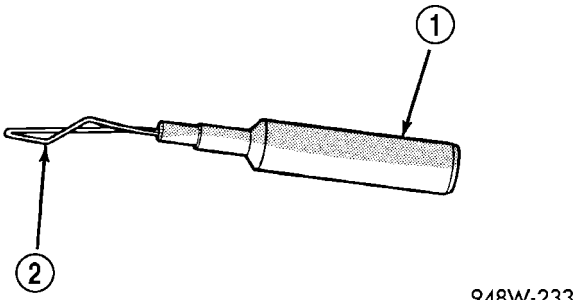

Fig. 5 PROBING TOOL

1 - SPECIAL TOOL 6801
2 - PROBING END

INTERMITTENT AND POOR CONNECTIONS

Most intermittent electrical problems are caused by faulty electrical connections or wiring. It is also possible for a sticking component or relay to cause a problem. Before condemning a component or wiring assembly, check the following items.

• Connectors are fully seated
• Spread terminals, or terminal push out
• Terminals in the wiring assembly are fully seated into the connector/component and locked into position
• Dirt or corrosion on the terminals. Any amount of corrosion or dirt could cause an intermittent problem
• Damaged connector/component casing exposing the item to dirt or moisture
• Wire insulation that has rubbed through causing a short to ground
• Some or all of the wiring strands broken inside of the insulation
• Wiring broken inside of the insulation

TROUBLESHOOTING WIRING PROBLEMS

When troubleshooting wiring problems there are six steps which can aid in the procedure. The steps are listed and explained below. Always check for non-factory items added to the vehicle before doing any diagnosis. If the vehicle is equipped with these items, disconnect them to verify these add-on items are not the cause of the problem.

(1) Verify the problem.
(2) Verify any related symptoms. Do this by performing operational checks on components that are in the same circuit. Refer to the wiring diagrams.
(3) Analyze the symptoms. Use the wiring diagrams to determine what the circuit is doing, where the problem most likely is occurring and where the diagnosis will continue.
(4) Isolate the problem area.
(5) Repair the problem area.
(6) Verify the proper operation. For this step, check for proper operation of all items on the repaired circuit. Refer to the wiring diagrams.

STANDARD PROCEDURE

STANDARD PROCEDURE - ELECTROSTATIC DISCHARGE (ESD) SENSITIVE DEVICES

All ESD sensitive components are solid state and a symbol (Fig. 6) is used to indicate this. When handling any component with this symbol, comply with the following procedures to reduce the possibility of electrostatic charge build up on the body and inadvertent discharge into the component. If it is not known whether the part is ESD sensitive, assume that it is.

(1) Always touch a known good ground before handling the part. This should be repeated while handling the part and more frequently after sliding across a seat, sitting down from a standing position, or walking a distance.
(2) Avoid touching electrical terminals of the part, unless instructed to do so by a written procedure.
(3) When using a voltmeter, be sure to connect the ground lead first.
(4) Do not remove the part form it's protective packing until it is time to install the part.
(5) Before removing the part from it's pakage, ground the pakage to a known good ground on the vehicle.

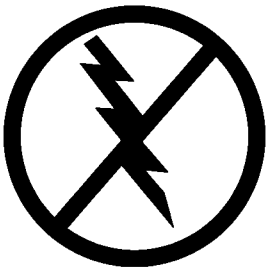

Fig. 6 ELECTROSTATIC DISCHARGE SYMBOL

WIRING DIAGRAM INFORMATION (Continued)

STANDARD PROCEDURE - TESTING OF VOLTAGE POTENTIAL

(1) Connect the ground lead of a voltmeter to a known good ground (Fig. 7).

(2) Connect the other lead of the voltmeter to the selected test point. The vehicle ignition may need to be turned ON to check voltage. Refer to the appropriate test procedure.

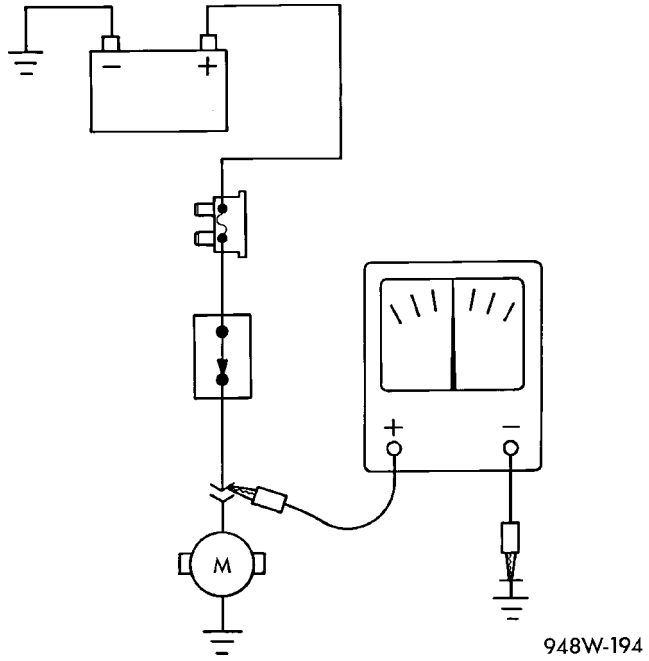

Fig. 7 TESTING FOR VOLTAGE POTENTIAL

STANDARD PROCEDURE - TESTING FOR CONTINUITY

(1) Remove the fuse for the circuit being checked or, disconnect the battery.

(2) Connect one lead of the ohmmeter to one side of the circuit being tested (Fig. 8).

(3) Connect the other lead to the other end of the circuit being tested. Low or no resistance means good continuity.

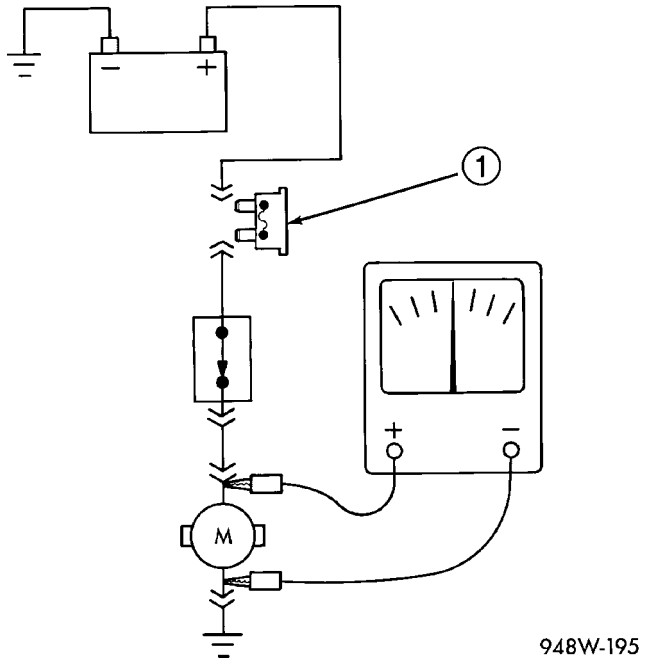

Fig. 8 TESTING FOR CONTINUITY

1 - FUSE REMOVED FROM CIRCUIT

STANDARD PROCEDURE - TESTING FOR A SHORT TO GROUND

(1) Remove the fuse and disconnect all items involved with the fuse.

(2) Connect a test light or a voltmeter across the terminals of the fuse.

(3) Starting at the fuse block, wiggle the wiring harness about six to eight inches apart and watch the voltmeter/test lamp.

(4) If the voltmeter registers voltage or the test lamp glows, there is a short to ground in that general area of the wiring harness.

WIRING DIAGRAM INFORMATION (Continued)

STANDARD PROCEDURE - TESTING FOR A SHORT TO GROUND ON FUSES POWERING SEVERAL LOADS

(1) Refer to the wiring diagrams and disconnect or isolate all items on the suspected fused circuits.

(2) Replace the blown fuse.

(3) Supply power to the fuse by turning ON the ignition switch or re-connecting the battery.

(4) Start connecting or energizing the items in the fuse circuit one at a time. When the fuse blows the circuit with the short to ground has been isolated.

STANDARD PROCEDURE - TESTING FOR A VOLTAGE DROP

(1) Connect the positive lead of the voltmeter to the side of the circuit closest to the battery (Fig. 9).

(2) Connect the other lead of the voltmeter to the other side of the switch, component or circuit.

(3) Operate the item.

(4) The voltmeter will show the difference in voltage between the two points.

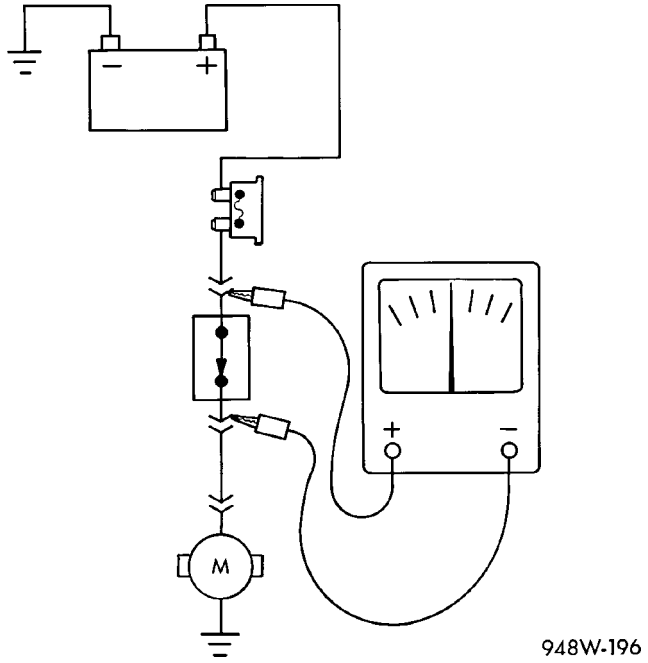

Fig. 9 TESTING FOR VOLTAGE DROP

SPECIAL TOOLS

WIRING/TERMINAL

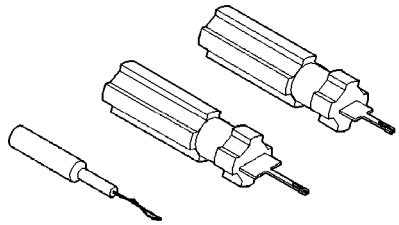

PROBING TOOL PACKAGE 6807

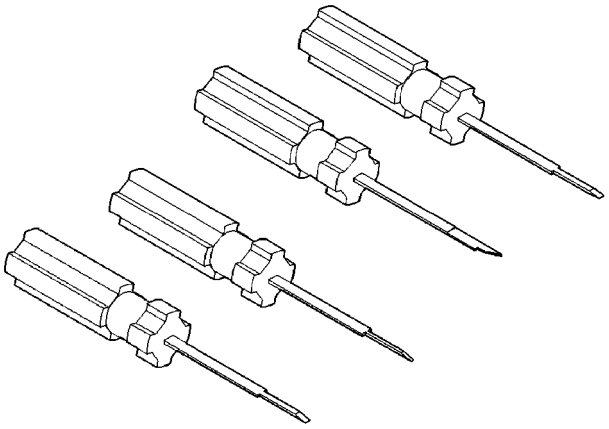

TERMINAL PICK TOOL SET 6680

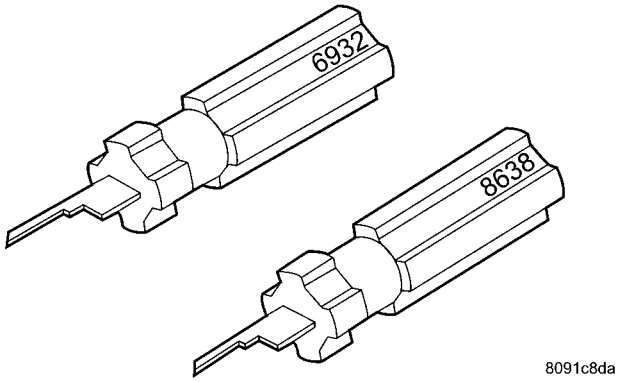

TERMINAL REMOVING TOOLS 6932 AND 8638

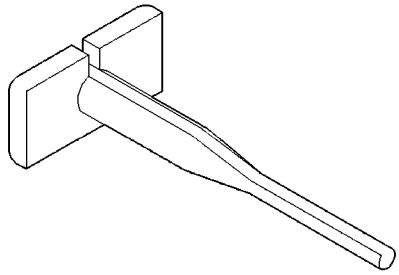

TERMINAL REMOVING TOOL 6934

CONNECTOR

REMOVAL

(1) Disconnect battery.

(2) Release Connector Lock (Fig. 10).

(3) Disconnect the connector being repaired from its mating half/component.

(4) Remove the dress cover (if applicable) (Fig. 10).

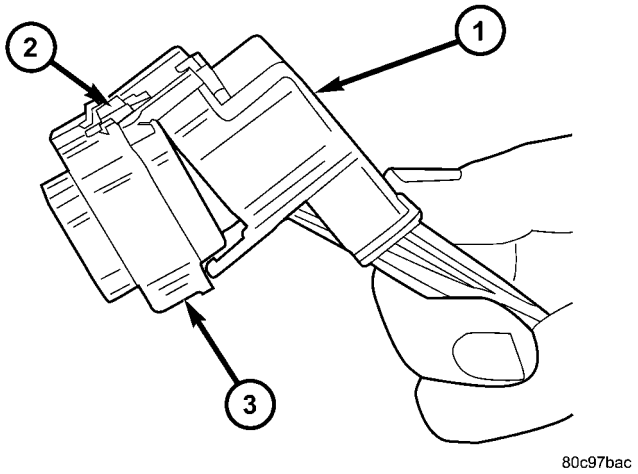

Fig. 10 REMOVAL OF DRESS COVER

1 - DRESS COVER
2 - CONNECTOR LOCK
3 - CONNECTOR

(5) Release the Secondary Terminal Lock, if required (Fig. 11).

(6) Position the connector locking finger away from the terminal using the proper special tool. Pull on the wire to remove the terminal from the connector (Fig. 12).

INSTALLATION

(1) Insert the removed terminal in the same cavity on the repair connector.

(2) Repeat steps for each terminal in the connector, being sure that all wires are inserted into the proper cavities. For additional connector pin-out identification, refer to the wiring diagrams.

(3) When the connector is re-assembled, the secondary terminal lock must be placed in the locked position to prevent terminal push out.

(4) Replace dress cover (if applicable).

(5) Connect connector to its mating half/component.

(6) Connect battery and test all affected systems.

CONNECTOR (Continued)

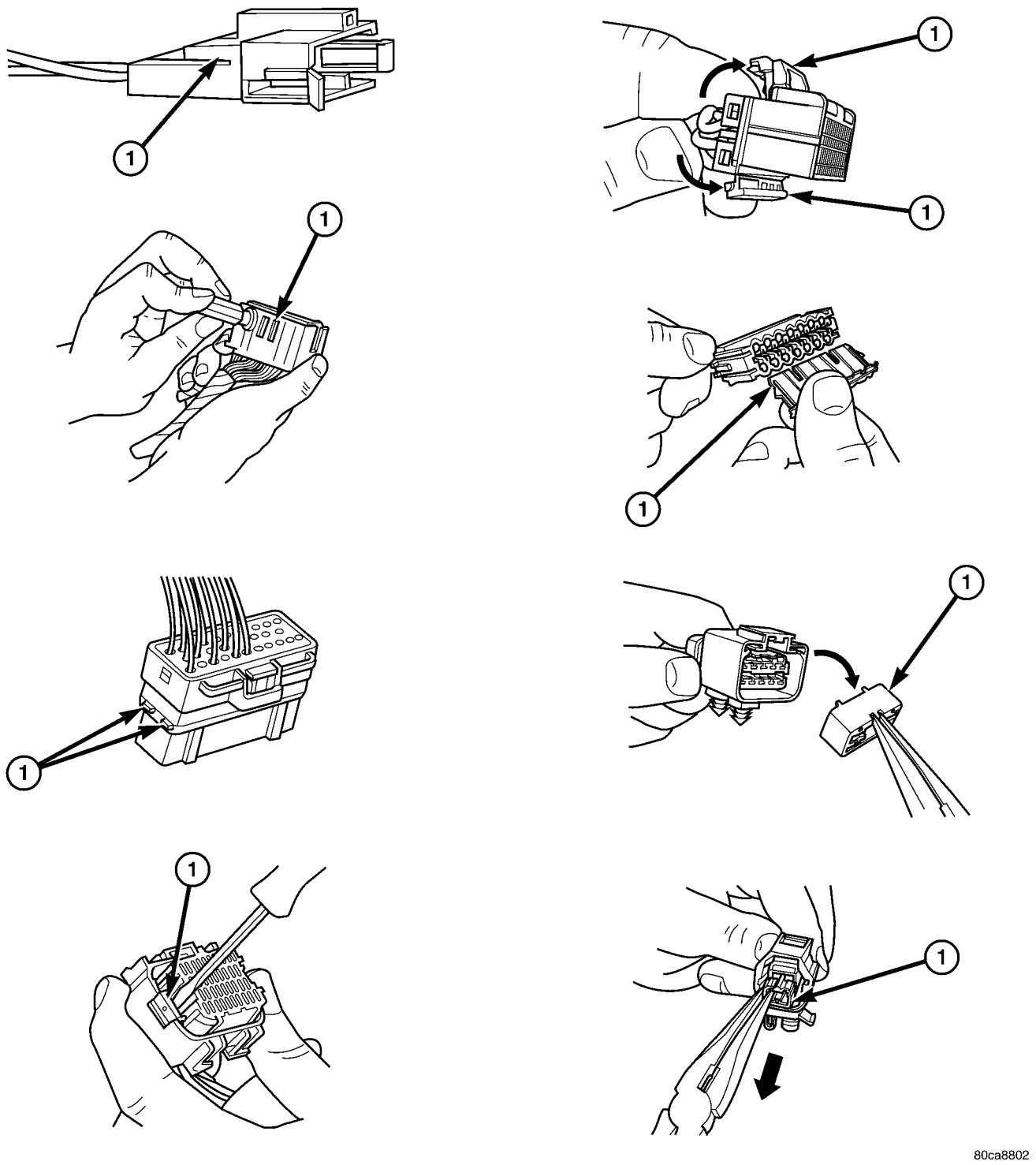

Fig. 11 EXAMPLES OF CONNECTOR SECONDARY TERMINAL LOCKS

1 - Secondary Terminal Lock

CONNECTOR (Continued)

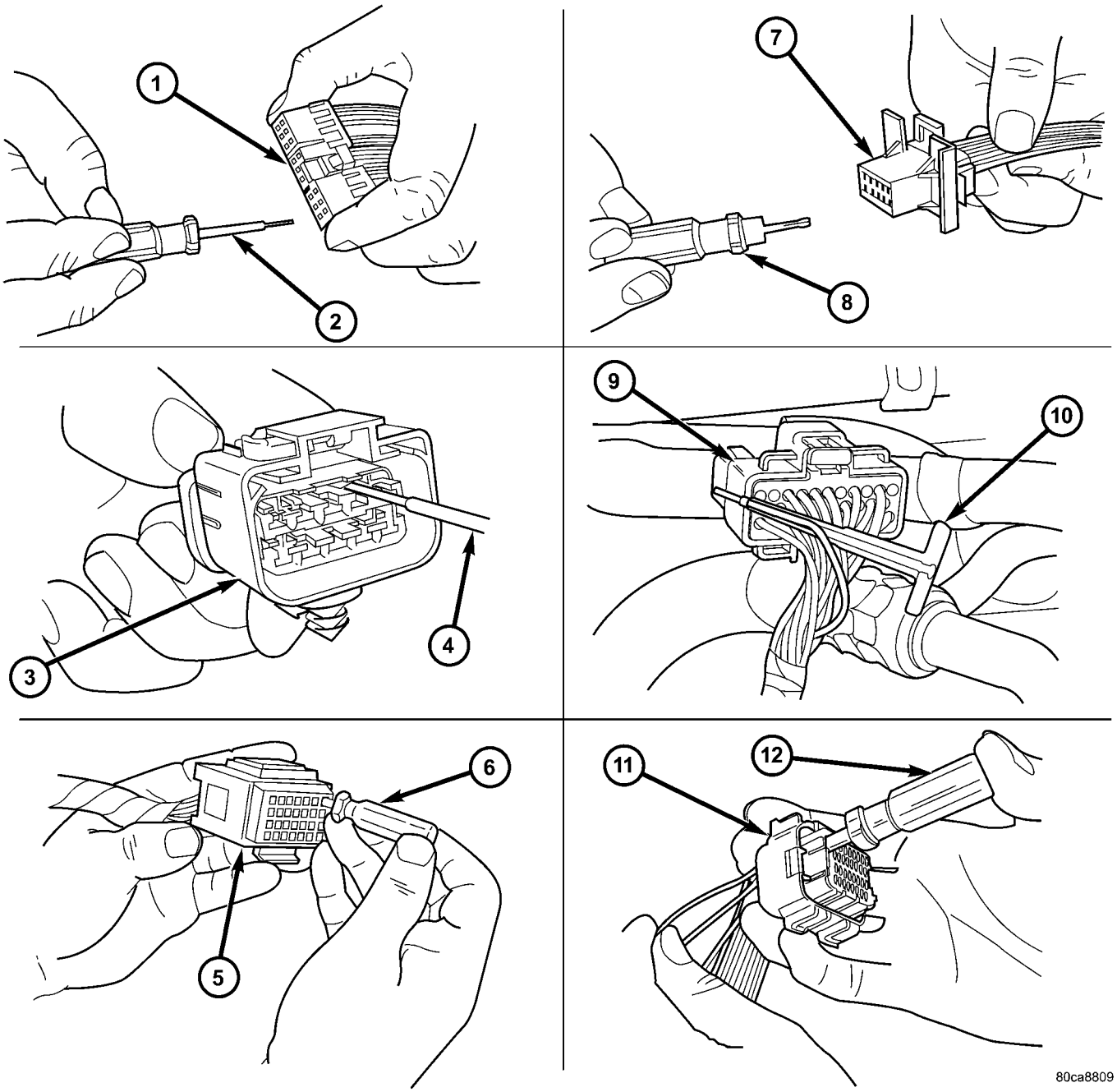

Fig. 12 TERMINAL REMOVAL

1 - TYPICAL CONNECTOR
2 - PICK FROM SPECIAL TOOL KIT 6680
3 - APEX CONNECTOR
4 - PICK FROM SPECIAL TOOL KIT 6680
5 - AUGAT CONNECTOR
6 - SPECIAL TOOL 6932
7 - MOLEX CONNECTOR
8 - SPECIAL TOOL 6742
9 - THOMAS AND BETTS CONNECTOR
10 - SPECIAL TOOL 6934
11 - TYCO CONNECTOR
12 - SPECIAL TOOL 8638

DIODE

REMOVAL

(1) Disconnect the battery.

(2) Locate the diode in the harness, and remove the protective covering.

(3) Remove the diode from the harness, pay attention to the current flow direction (Fig. 13).

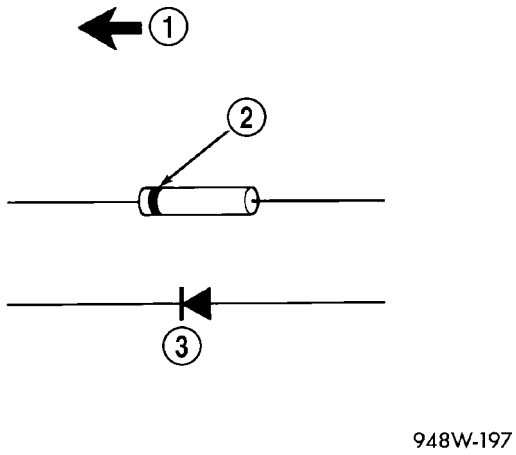

Fig. 13 DIODE IDENTIFICATION

1 - CURRENT FLOW
2 - BAND AROUND DIODE INDICATES CURRENT FLOW
3 - DIODE AS SHOWN IN THE DIAGRAMS

INSTALLATION

(1) Remove the insulation from the wires in the harness. Only remove enough insulation to solder in the new diode.

(2) Install the new diode in the harness, making sure current flow is correct. If necessary, refer to the appropriate wiring diagram for current flow (Fig. 13).

(3) Solder the connection together using rosin core type solder only. **Do not use acid core solder.**

(4) Tape the diode to the harness using electrical tape. Make sure the diode is completely sealed from the elements.

(5) Re-connect the battery and test affected systems.

TERMINAL

REMOVAL

(1) Follow steps for removing terminals described in the connector removal section.

(2) Cut the wire 6 inches from the back of the connector.

INSTALLATION

(1) Select a wire from the terminal repair kit that best matches the color and gage of the wire being repaired.

(2) Cut the repair wire to the proper length and remove one–half (1/2) inch of insulation.

(3) Splice the repair wire to the wire harness (see wire splicing procedure).

(4) Insert the repaired wire into the connector.

(5) Install the connector locking wedge, if required, and reconnect the connector to its mating half/component.

(6) Re-tape the wire harness starting at 1–1/2 inches behind the connector and 2 inches past the repair.

(7) Connect battery and test all affected systems.

WIRE

STANDARD PROCEDURE - WIRE SPLICING

When splicing a wire, it is important that the correct gage be used as shown in the wiring diagrams.

(1) Remove one-half (1/2) inch of insulation from each wire that needs to be spliced.

(2) Place a piece of adhesive lined heat shrink tubing on one side of the wire. Make sure the tubing will be long enough to cover and seal the entire repair area.

(3) Place the strands of wire overlapping each other inside of the splice clip (Fig. 14).

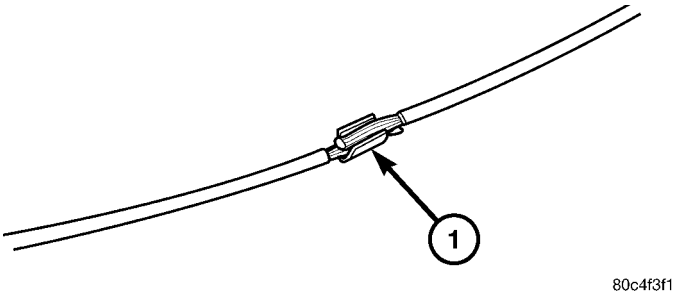

Fig. 14 SPLICE BAND

1 - SPLICE BAND

(4) Using crimping tool, Mopar p/n 05019912AA, crimp the splice clip and wires together (Fig. 15).

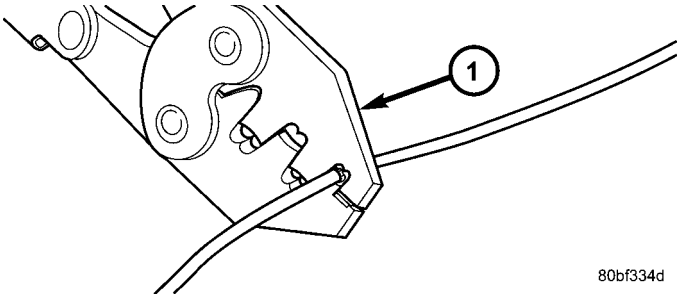

Fig. 15 CRIMPING TOOL

1 - CRIMPING TOOL

(5) Solder the connection together using rosin core type solder only (Fig. 16).

CAUTION: DO NOT USE ACID CORE SOLDER.

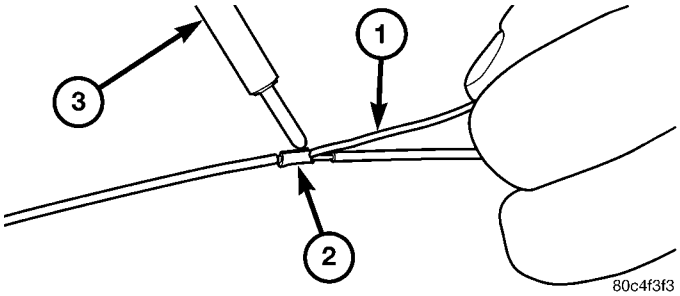

Fig. 16 SOLDER SPLICE

1 - SOLDER
2 - SPLICE BAND
3 - SOLDERING IRON

(6) Center the heat shrink tubing over the joint and heat using a heat gun. Heat the joint until the tubing is tightly sealed and sealant comes out of both ends of the tubing (Fig. 17).

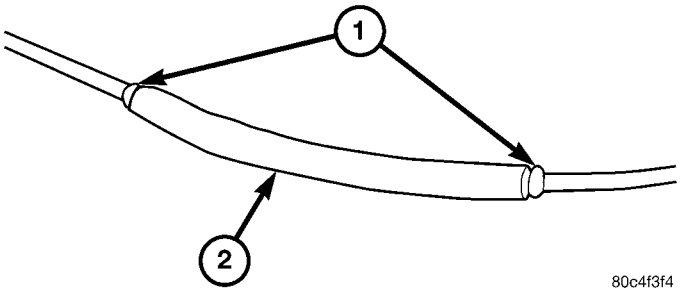

Fig. 17 HEAT SHRINK TUBE

1 - SEALANT
2 - HEAT SHRINK TUBE

8W-02 COMPONENT INDEX

Component	Page
A/C Compressor Clutch Relay	8W-42
A/C Compressor Clutch	8W-42
A/C Evaporator Temperature Sensor	8W-42
A/C-Heater Control	8W-42
A/C Pressure Transducer	8W-42
Airbag Control Module	8W-43
Airbag Squibs	8W-43
Ambient Temperature Sensor	8W-30
Antenna	8W-47
Auto Headlamp Relay	8W-50
Auto Headlamp Switch	8W-50
Auto Shut Down Relay	8W-10
Automatic Day/Night Mirror	8W-62
Automatic Temperature Control Head	8W-42
Autostick Switch	8W-31
Back-Up Lamp Switch	8W-51
Back-Up Lamps	8W-51
Battery	8W-20
Blend Door Actuator	8W-42
Blower Motor Power Module	8W-42
Blower Motor Resistor Block	8W-42
Blower Motor	8W-42
Body Control Module	8W-45
Brake Fluid Level Switch	8W-40
Brake Lamp Switch	8W-33
Brake Transmission Shift Interlock Solenoid	8W-31
Camshaft Position Sensor	8W-30
CD Changer	8W-47
Center High Mounted Stop Lamp	8W-51
Cigar Lighter/Power Outlet	8W-41
Circuit Breakers	8W-12
Clockspring	8W-33, 41, 43, 47
Clutch Interlock/Upstop Switch	8W-21
Coil On Plugs	8W-30
Combination Flasher	8W-52
Compass/Mini-Trip Computer	8W-40
Controller Antilock Brake	8W-35
Crankshaft Position Sensor	8W-30
Cylinder Lock Switches	8W-39
Data Link Connector	8W-18
Daytime Running Lamp Module	8W-50
Decklid Cylinder Lock Switch	8W-39
Decklid Release Solenoid/Ajar Switch	8W-45
Decklid Release Switch	8W-45
Dome Lamp	8W-44
Door Lock Motor/Ajar Switches	8W-61
Door Lock Switches	8W-61
Engine Coolant Temperature Sensor	8W-30
EVAP/Purge Solenoid	8W-30
Fog Lamp Relay	8W-50
Fog Lamps	8W-50, 51
Front Fog Lamp Switch	8W-50
Front Vertical Motor	8W-63
Front Washer Pump Motor	8W-53
Front Wiper High/Low Relay	8W-53
Front Wiper Motor	8W-53
Front Wiper On/Off Relay	8W-53
Fuel Injectors	8W-30
Fuel Pump Module	8W-30
Fuel Pump Relay	8W-30
Fusible Link	8W-20, 21
Garage Door Opener	8W-44
Generator	8W-20
Grounds	8W-15
Headlamp Beam Select Switch	8W-50
Headlamp Delay Relay	8W-12
Headlamp Leveling Switch	8W-50
Headlamp Switch	8W-50
Headlamp Washer Pump Motor	8W-53
Headlamp Washer Relay	8W-53
Headlamps	8W-50
Heated Seat Backs	8W-63
Heated Seat Cushions	8W-63
Heated Seat Modules	8W-63
Heated Seat Relay	8W-63
Heated Seat Switch	8W-63
High Speed Radiator Fan Relay	8W-42
Horn Relay	8W-41
Horn Switch	8W-41
Horn	8W-41
Idle Air Control Motor	8W-30
Ignition Coil Pack	8W-30
Ignition Switch	8W-10
Inlet Air Temp Sensor	8W-30
Input Speed Sensor	8W-31
Instrument Cluster	8W-40
Junction Block	8W-12
Knock Sensor	8W-30
Lavalier Modules	8W-50, 52
Leak Detection Pump	8W-30
License Lamps	8W-51
Low Speed Radiator Fan Relay	8W-42
Manifold Absolute Pressure Sensor	8W-30
Master Power Window Switch	8W-60
Mode Door Actuator	8W-42
Multi-Function Switch	8W-44, 50, 51, 52, 53
Natural Vacuum Leak Detection Assembly	8W-30
Noise Suppressors	8W-30
Oil Pressure Switch	8W-40
Output Speed Sensor	8W-31
Overhead Map/Courtesy Lamps	8W-44
Oxygen Sensors	8W-30
Park Brake Switch	8W-40

Component	Page
Park Lamp Relay	8W-50
Park/Turn Signal Lamps	8W-50, 52
PCV Heater	8W-30
Power Amplifier	8W-47
Power Antenna	8W-47
Power Distribution Center	8W-10
Power Mirror Switch	8W-62
Power Mirrors	8W-62
Power Outlet	8W-41
Power Seat Motors	8W-63
Power Seat Switch	8W-63
Power Steering Pressure Switch	8W-30
Power Top Pump Motor	8W-66
Power Top Switch	8W-66
Power Top Up/Down Relays	8W-66
Power Window Motors	8W-60
Power Window Switches	8W-60
Powertrain Control Module	8W-30
Radiator Fan	8W-42
Radio	8W-47
Rear Floor Courtesy Lamp	8W-44
Rear Fog Lamp Relay	8W-51
Rear Window Defogger Relay	8W-48
Rear Window Defogger	8W-48
Recirculation Door Actuator	8W-42
Remote Keyless Entry Antenna	8W-61
Remote Radio Switches	8W-47
Seat Belt Control Module	8W-43
Seat Belt Solenoids	8W-43
Seat Belt Switches	8W-43
Seat Belt Tensioners	8W-43
Sentry Key Immobilizer Module	8W-39
Side Impact Sensors	8W-43
Speakers	8W-47
Speed Control Switches	8W-33
Splices	8W-70
Starter Motor Relay	8W-21
Starter Motor	8W-21
Sun Sensor	8W-42
Sunroof Control Module	8W-64
Sunroof Switch	8W-64
Tail/Side Marker Lamps	8W-51
Tail/Stop Lamps	8W-51
Tail/Turn Signal Lamps	8W-51, 52
Throttle Position Sensor	8W-30
Traction Control Switch	8W-40
Transmission Control Module	8W-31
Transmission Control Relay	8W-31
Transmission Range Indicator Illumination	8W-44
Transmission Range Sensor	8W-31
Transmission Solenoid/Pressure Switch Assembly	8W-31
Transmission	8W-15
Trunk Lamp	8W-44
Turn Lamps	8W-52
Vehicle Speed Control Servo	8W-33
Vehicle Speed Sensor	8W-30
Visor/Vanity Lamps	8W-44
Wheel Speed Sensors	8W-35

8W-10 POWER DISTRIBUTION

Component	Page
A/C Compressor Clutch	8W-10-16
A/C Compressor Clutch Relay	8W-10-16, 24, 25
Auto Headlamp Relay	8W-10-11
Auto Shut Down Relay	8W-10-8, 17
Battery	8W-10-7
Body Control Module	8W-10-9, 10, 22, 24, 25, 26, 27
Brake Lamp Switch	8W-10-15
Cigar Lighter/Power Outlet	8W-10-7, 9
Circuit Breaker No. 1 (JB)	8W-10-10
Circuit Breaker No. 2 (JB)	8W-10-27
Clutch Interlock/Upstop Switch	8W-10-26
Coil On Plug No. 1	8W-10-19
Coil On Plug No. 2	8W-10-19
Coil On Plug No. 3	8W-10-19
Coil On Plug No. 4	8W-10-19
Coil On Plug No. 5	8W-10-19
Coil On Plug No. 6	8W-10-19
Controller Antilock Brake	8W-10-7, 8, 21, 23
Daytime Running Lamp Module	8W-10-10
Driver Heated Seat Module	8W-10-17
Fog Lamp Relay	8W-10-8
Front Wiper High/Low Relay	8W-10-22
Front Wiper Motor	8W-10-22
Front Wiper On/Off Relay	8W-10-22
Fuel Injector No. 1	8W-10-18, 19
Fuel Injector No. 2	8W-10-18, 19
Fuel Injector No. 3	8W-10-18, 19
Fuel Injector No. 4	8W-10-18, 19
Fuel Injector No. 5	8W-10-19
Fuel Injector No. 6	8W-10-19
Fuel Pump Module	8W-10-12
Fuel Pump Relay	8W-10-12, 24, 25
Fuse 1	8W-10-7, 9, 26, 27
Fuse 2	8W-10-7, 9
Fuse 3	8W-10-7, 9
Fuse 4	8W-10-7, 10, 27
Fuse 5	8W-10-15
Fuse 6	8W-10-7, 12
Fuse 7	8W-10-21
Fuse 8	8W-10-7, 12, 21, 26
Fuse 9	8W-10-7, 10, 13, 14
Fuse 10	8W-10-7, 10, 13, 14, 26
Fuse 11	8W-10-7, 15, 27
Fuse 12	8W-10-7, 10, 16
Fuse 13	8W-10-7, 10, 17
Fuse 14	8W-10-7, 17, 27
Fuse 15	8W-10-7, 21, 27
Fuse 16	8W-10-7, 21, 27
Fuse 17	8W-10-7, 21, 27
Fuse 18	8W-10-7, 22
Fuse 19	8W-10-7, 8, 22
Fuse 20	8W-10-7, 8, 23
Fuse 22	8W-10-8, 23
Fuse 23	8W-10-8, 24, 25, 27
Fuse 24	8W-10-8, 17, 19
Fuse 25	8W-10-8, 17, 20
G103	8W-10-22
G203	8W-10-26
Generator	8W-10-20
Headlamp Delay Relay	8W-10-10
Headlamp Washer Pump Motor	8W-10-9
Headlamp Washer Relay	8W-10-9
Heated Seat Relay	8W-10-7, 8, 17, 24, 25
High Speed Radiator Fan Relay	8W-10-16, 24, 25
Ignition Coil Pack	8W-10-18
Ignition Switch	8W-10-7, 8, 9, 12, 13, 14, 26, 27
Junction Block	8W-10-7, 8, 10, 11, 12, 15, 21, 24, 25, 26, 27
Leak Detection Pump	8W-10-25
Left Rear Fog Lamp	8W-10-15
Low Speed Radiator Fan Relay	8W-10-16, 24, 25
Multi-Function Switch	8W-10-8, 10, 11, 23
Noise Suppressor	8W-10-18
Noise Suppressor No. 1	8W-10-19
Noise Suppressor No. 2	8W-10-19
Oxygen Sensor 1/1 Right Bank Up	8W-10-20
Oxygen Sensor 1/2 Right Bank Down	8W-10-20
Oxygen Sensor 2/1 Left Bank Up	8W-10-20
Oxygen Sensor 2/2 Left Bank Down	8W-10-20
Passenger Heated Seat Module	8W-10-17
PCV Heater	8W-10-20
Power Distribution Center	8W-10-2, 7, 8, 9, 10, 12, 13, 14, 15, 16, 17, 19, 20, 21, 22, 23, 24, 25, 26, 27
Power Outlet	8W-10-9
Power Seat Switch	8W-10-10
Power Top Pump Motor	8W-10-21
Power Top Up/Down Relays	8W-10-7, 21
Powertrain Control Module	8W-10-13, 17, 20, 24, 25, 26
Radiator Fan	8W-10-16
Rear Fog Lamp Relay	8W-10-15
Rear Window Defogger	8W-10-12
Rear Window Defogger Relay	8W-10-12
Right Rear Fog Lamp	8W-10-15
Seat Belt Control Module	8W-10-7, 22
Sentry Key Immobilizer Module	8W-10-7, 13, 14, 24, 25
Starter Motor	8W-10-12
Starter Motor Relay	8W-10-12, 26
Transmission Control Module	8W-10-14, 26
Transmission Control Relay	8W-10-7, 13, 14
Transmission Solenoid/Pressure Switch Assembly	8W-10-13, 14

POWER DISTRIBUTION CENTER

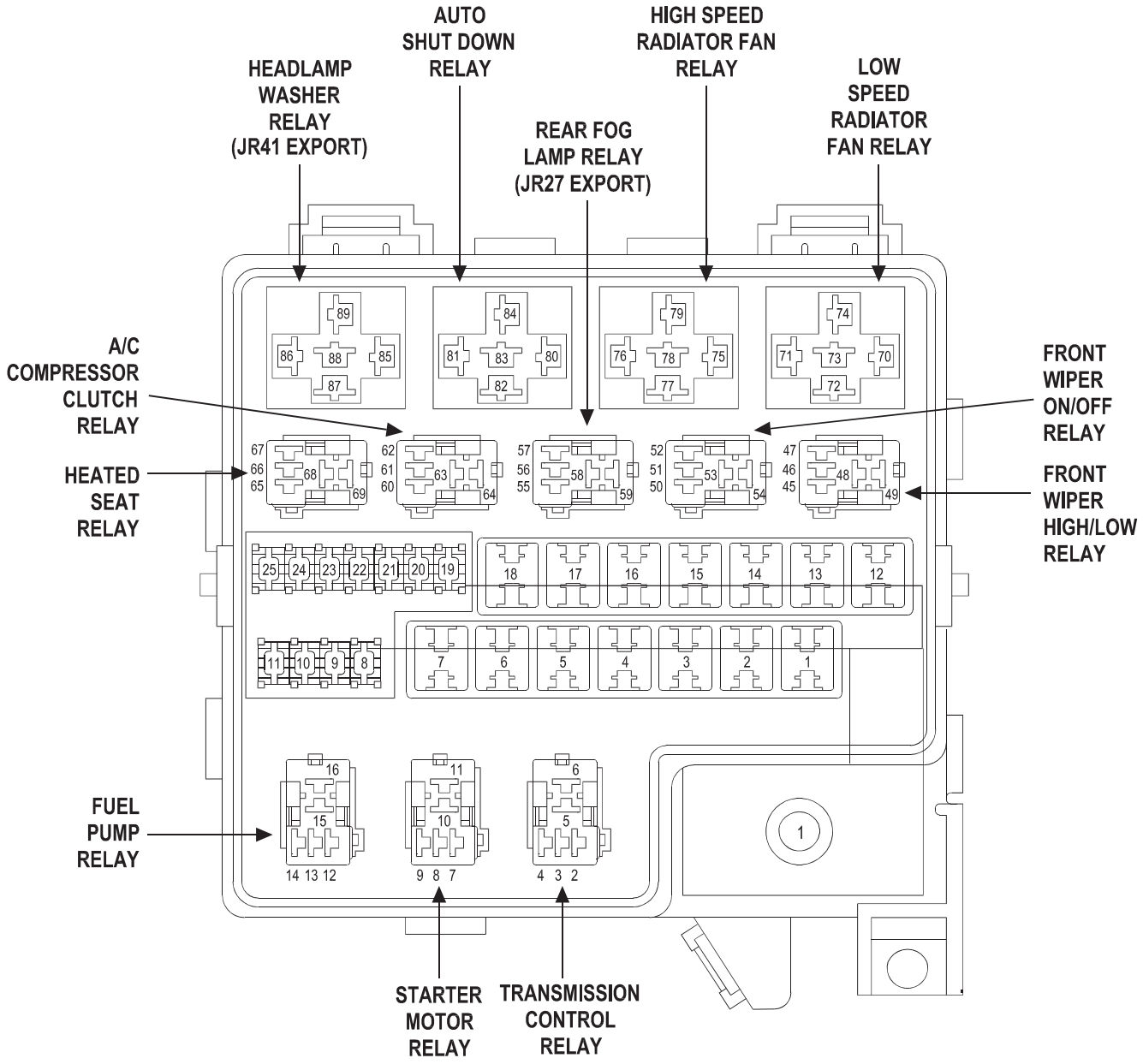

FUSES

FUSE NO.	AMPS	FUSED CIRCUIT	FUNCTION
1	40A	A2 12PK/BK	FUSED B(+)
2	20A	F30 16RD	FUSED B(+)
3	30A	A53 14RD/YL □□ ▲▲	FUSED B(+)
4	40A	A3 12RD/WT	FUSED B(+)
5	-	-	-
6	40A	A4 12BK/PK	FUSED B(+)
7	-	-	-
8	20A	A1 18RD	FUSED B(+)
9	20A	A24 18BK ■■	FUSED B(+)
10	10A	A51 20RD/WT	FUSED B(+)
11	20A	A7 16RD/BK	FUSED B(+)
12	40A	A16 12RD/LG	FUSED B(+)
13	20A	F235 16RD	FUSED B(+)
14	30A	A14 14RD/TN	FUSED B(+)
15	40A	A10 12RD/DG ▲▲▲	FUSED B(+)
16	40A	A13 12PK/WT	FUSED B(+)
17	40A	A25 12DB □	FUSED B(+)
18	40A	A5 12RD/GY	FUSED B(+)
19	20A	A45 18BR □	FUSED B(+)
20	20A	A15 16PK	FUSED B(+)
21	-	-	-
22	20A	A20 12RD/DB ▲▲▲	FUSED B(+)
23	20A	F12 18DB/WT	FUSED IGNITION SWITCH OUTPUT (RUN-START)
23	20A	F12 18DB/WT	FUSED IGNITION SWITCH OUTPUT (RUN-START)
24	20A	F142 16DG/LG ◇	FUSED AUTOMATIC SHUT DOWN RELAY OUTPUT
25	20A	F142 16OR/DG	FUSED AUTOMATIC SHUT DOWN RELAY OUTPUT

◇ 2.7L
□ JR27
□□ JR41
▲▲ EXPORT
▲▲▲ ABS
■■ EATX

A/C COMPRESSOR CLUTCH RELAY

CAVITY	CIRCUIT	FUNCTION
60	C28 20DB/OR ◇	A/C COMPRESSOR CLUTCH RELAY CONTROL
60	C28 20DB/OR ◇◇	A/C CLUTCH RELAY CONTROL
61	-	-
62	F12 20DB/WT	FUSED IGNITION SWITCH OUTPUT (RUN-START)
63	C3 14DB/BK	A/C COMPRESSOR CLUTCH RELAY OUTPUT
64	A16 12RD/LG	FUSED B(+)

AUTO SHUT DOWN RELAY

CAVITY	CIRCUIT	FUNCTION
80	K51 20DB/VT	AUTOMATIC SHUT DOWN RELAY CONTROL
81	A14 14RD/TN	FUSED B(+)
82	A142 14DG/OR	AUTOMATIC SHUT DOWN RELAY OUTPUT
83	-	-
84	A14 14RD/TN	FUSED B(+)

FRONT WIPER HIGH/LOW RELAY

CAVITY	CIRCUIT	FUNCTION
45	V16 20VT/PK	FRONT WIPER HIGH/LOW RELAY CONTROL
46	V3 16BR/WT	FRONT WIPER LOW SPEED OUTPUT
47	F13 20DB	FUSED IGNITION SWITCH OUTPUT (RUN-ACC)
48	V4 16RD/YL	FRONT WIPER HIGH SPEED OUTPUT
49	V5 16DG/VT	FRONT WIPER RELAY COMMON

FRONT WIPER ON/OFF RELAY

CAVITY	CIRCUIT	FUNCTION
50	V14 20RD/VT	FRONT WIPER ON/OFF RELAY CONTROL
51	Z247 16BK	GROUND
52	A5 14RD/GY	FUSED B(+)
53	A5 12RD/GY	FUSED B(+)
54	V5 16DG/VT	FRONT WIPER RELAY COMMON

◇ 2.7L
◇◇ 2.0L/2.4L

FUEL PUMP RELAY

CAVITY	CIRCUIT	FUNCTION
12	K31 20BR/LG	FUEL PUMP RELAY CONTROL
13	-	-
14	F12 18DB/WT	FUSED IGNITION SWITCH OUTPUT (RUN-START)
15	A141 14DG/WT	FUEL PUMP RELAY OUTPUT
16	A1 18RD	FUSED B(+)

HEADLAMP WASHER RELAY (JR41 EXPORT)

CAVITY	CIRCUIT	FUNCTION
85	V58 18BR/YL	HEADLAMP WASHER RELAY CONTROL
86	A53 16RD/YL	FUSED B(+)
87	V53 14RD/YL	HEADLAMP WASHER RELAY OUTPUT
88	-	-
89	A53 14RD/YL	FUSED B(+)

HEATED SEAT RELAY

CAVITY	CIRCUIT	FUNCTION
65	P340 18LG/YL	HEATED SEAT RELAY CONTROL
66	-	-
67	F12 18DB/WT	FUSED IGNITION SWITCH OUTPUT (RUN-START)
68	P86 16PK/BK	HEATED SEAT RELAY OUTPUT
69	F235 16RD	FUSED B(+)

HIGH SPEED RADIATOR FAN RELAY

CAVITY	CIRCUIT	FUNCTION
75	C27 20DB/PK ◇	HIGH SPEED RADIATOR FAN RELAY CONTROL
75	C27 20DB/PK ◇◇	HIGH RAD FAN RELAY CONTROL
76	F12 20DB/WT	FUSED IGNITION SWITCH OUTPUT (RUN-START)
77	C25 12YL ◇	HIGH SPEED RADIATOR FAN RELAY OUTPUT
77	C25 12YL ◇◇	HIGH RAD FAN RELAY OUTPUT
78	-	-
79	A16 12RD/LG	FUSED B(+)

◇ 2.7L
◇◇ 2.0L/2.4L

LOW SPEED RADIATOR FAN RELAY

CAVITY	CIRCUIT	FUNCTION
70	C24 20DB/TN ◇	LOW SPEED RADIATOR FAN RELAY CONTROL
70	C24 20DB/TN ◇◇	LOW RAD FAN RELAY CONTROL
71	F12 20DB/WT	FUSED IGNITION SWITCH OUTPUT (RUN-START)
72	C23 12DG ◇	LOW SPEED RADIATOR FAN RELAY OUTPUT
72	C23 12DG ◇◇	LOW RAD FAN RELAY OUTPUT
73	-	-
74	A16 12RD/LG	FUSED B(+)

REAR FOG LAMP RELAY (JR27 EXPORT)

CAVITY	CIRCUIT	FUNCTION
55	L36 18LG	REAR FOG LAMP CONTROL
56	-	-
57	Z247 18BK	GROUND
58	L95 18DG/YL	REAR FOG LAMP RELAY OUTPUT
59	A7 16RD/BK	FUSED B(+)

STARTER MOTOR RELAY

CAVITY	CIRCUIT	FUNCTION
7	K90 20TN	ENGINE STARTER MOTOR RELAY CONTROL
8	-	-
9	A41 16YL	FUSED IGNITION SWITCH OUTPUT (START)
9	T141 16YL/RD ◇ ■	FUSED IGNITION SWITCH OUTPUT (START)
10	T40 16BR	ENGINE STARTER MOTOR RELAY OUTPUT
11	A1 18RD	FUSED B(+)

TRANSMISSION CONTROL RELAY

CAVITY	CIRCUIT	FUNCTION
2	Z246 20BK/RD	GROUND
3	-	-
4	T15 20LG	TRANSMISSION CONTROL RELAY CONTROL
5	T16 20RD	TRANSMISSION CONTROL RELAY OUTPUT
6	A24 18BK	FUSED B(+)

■ MTX
◇ 2.7L
◇◇ 2.0L/2.4L

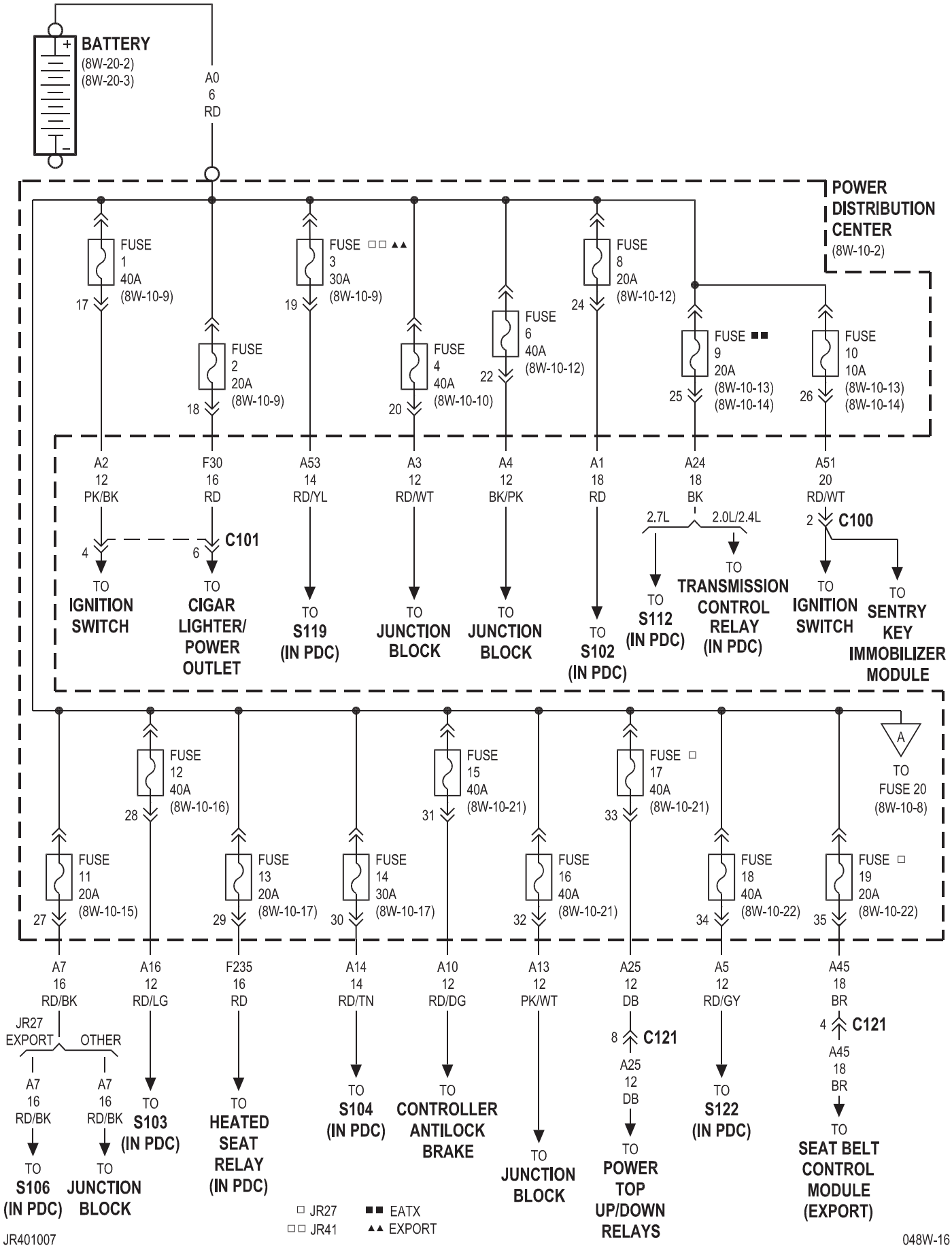
BATTERY
(8W-20-2)
(8W-20-3)
A0
6
RD
POWER DISTRIBUTION CENTER
(8W-10-2)
FUSE 1 40A (8W-10-9)
17
FUSE 2 20A (8W-10-9)
18
FUSE 3 30A (8W-10-9)
19
FUSE 4 40A (8W-10-10)
20
FUSE 6 40A (8W-10-12)
22
FUSE 8 20A (8W-10-12)
24
FUSE 9 20A (8W-10-13) (8W-10-14)
25
FUSE 10 10A (8W-10-13) (8W-10-14)
26
A2 12 PK/BK
F30 16 RD
A53 14 RD/YL
A3 12 RD/WT
A4 12 BK/PK
A1 18 RD
A24 18 BK
A51 20 RD/WT
2.7L
2.0L/2.4L
2
C100
4
6
C101
TO IGNITION SWITCH
TO CIGAR LIGHTER/ POWER OUTLET
TO S119 (IN PDC)
TO JUNCTION BLOCK
TO JUNCTION BLOCK
TO S102 (IN PDC)
TO S112 (IN PDC)
TO TRANSMISSION CONTROL RELAY (IN PDC)
TO IGNITION SWITCH
TO SENTRY KEY IMMOBILIZER MODULE
FUSE 11 20A (8W-10-15)
27
FUSE 12 40A (8W-10-16)
28
FUSE 13 20A (8W-10-17)
29
FUSE 14 30A (8W-10-17)
30
FUSE 15 40A (8W-10-21)
31
FUSE 16 40A (8W-10-21)
32
FUSE 17 40A (8W-10-21)
33
FUSE 18 40A (8W-10-22)
34
FUSE 19 20A (8W-10-22)
35
A
TO FUSE 20 (8W-10-8)
A7 16 RD/BK
A16 12 RD/LG
F235 16 RD
A14 14 RD/TN
A10 12 RD/DG
A13 12 PK/WT
A25 12 DB
A5 12 RD/GY
A45 18 BR
JR27 EXPORT
OTHER
8
C121
4
C121
A7 16 RD/BK
A7 16 RD/BK
A25 12 DB
A45 18 BR
TO S106 (IN PDC)
TO JUNCTION BLOCK
TO S103 (IN PDC)
TO HEATED SEAT RELAY (IN PDC)
TO S104 (IN PDC)
TO CONTROLLER ANTILOCK BRAKE
TO JUNCTION BLOCK
TO POWER TOP UP/DOWN RELAYS
TO S122 (IN PDC)
TO SEAT BELT CONTROL MODULE (EXPORT)
JR27
JR41
EATX
EXPORT
JR401007
048W-16

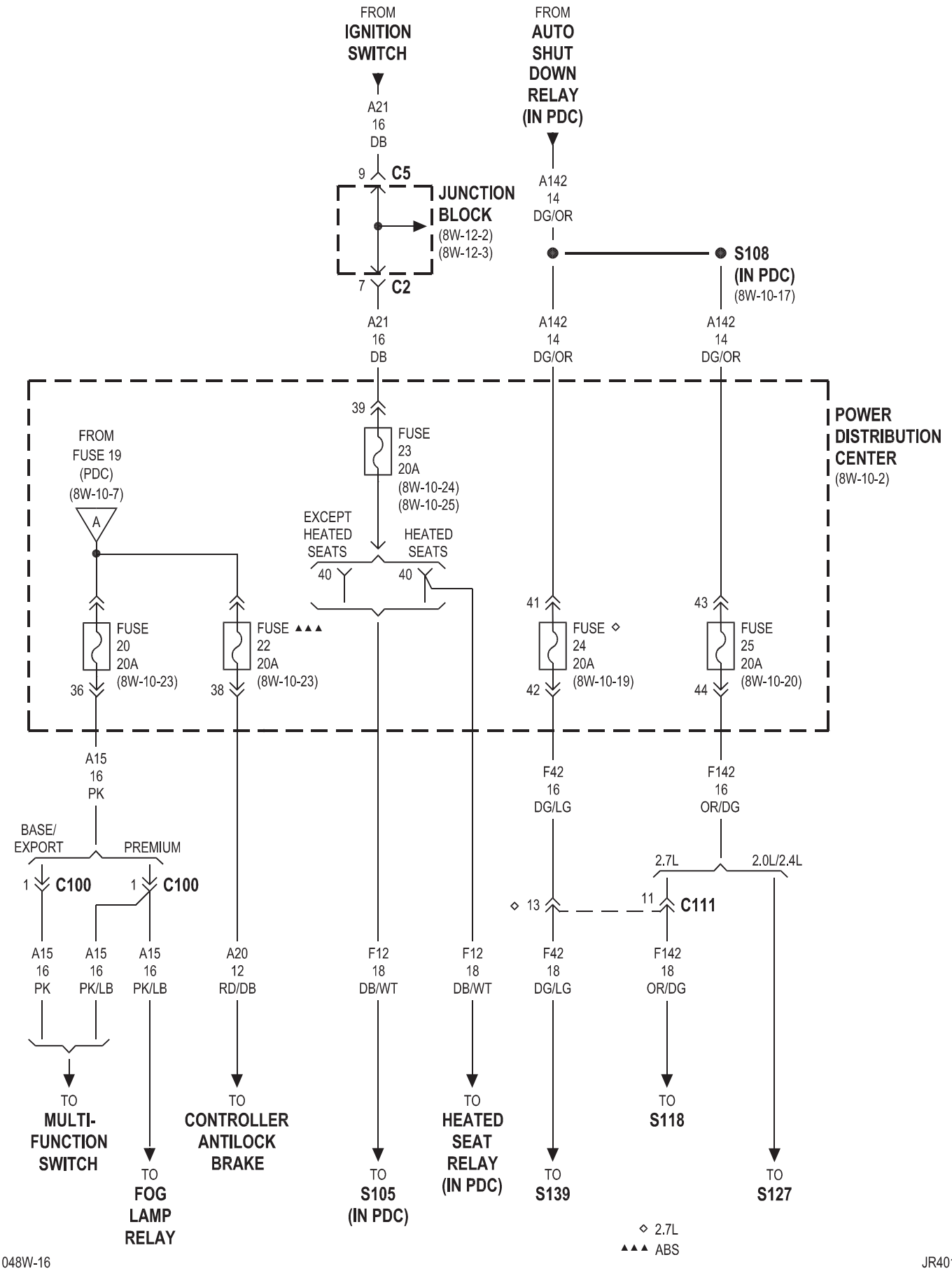
FROM
IGNITION
SWITCH
A21
16
DB
9
C5
JUNCTION
BLOCK
(8W-12-2)
(8W-12-3)
7
C2
A21
16
DB
FROM
AUTO
SHUT
DOWN
RELAY
(IN PDC)
A142
14
DG/OR
S108
(IN PDC)
(8W-10-17)
A142
14
DG/OR
A142
14
DG/OR
POWER
DISTRIBUTION
CENTER
(8W-10-2)
39
FUSE
23
20A
(8W-10-24)
(8W-10-25)
FROM
FUSE 19
(PDC)
(8W-10-7)
A
EXCEPT
HEATED
SEATS
HEATED
SEATS
40
40
41
43
FUSE
20
20A
(8W-10-23)
36
FUSE ▲▲▲
22
20A
(8W-10-23)
38
FUSE ◇
24
20A
(8W-10-19)
42
FUSE
25
20A
(8W-10-20)
44
A15
16
PK
F42
16
DG/LG
F142
16
OR/DG
BASE/
EXPORT
PREMIUM
1
C100
1
C100
2.7L
2.0L/2.4L
◇ 13
11
C111
A15
16
PK
A15
16
PK/LB
A15
16
PK/LB
A20
12
RD/DB
F12
18
DB/WT
F12
18
DB/WT
F42
18
DG/LG
F142
18
OR/DG
TO
MULTI-
FUNCTION
SWITCH
TO
FOG
LAMP
RELAY
TO
CONTROLLER
ANTILOCK
BRAKE
TO
S105
(IN PDC)
TO
HEATED
SEAT
RELAY
(IN PDC)
TO
S139
TO
S118
TO
S127
◇ 2.7L
▲▲▲ ABS

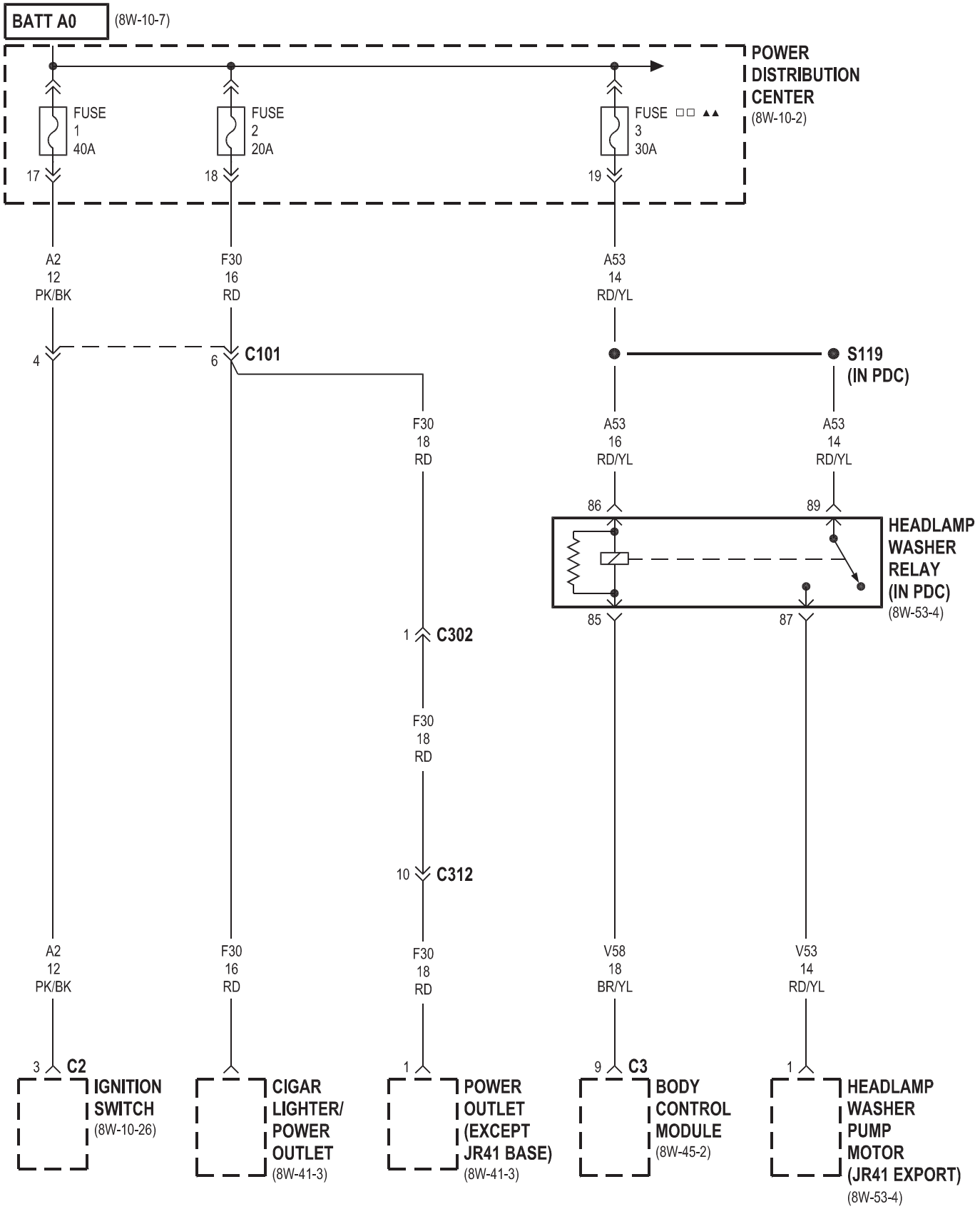
BATT A0
(8W-10-7)
POWER DISTRIBUTION CENTER
(8W-10-2)
FUSE 1 40A
FUSE 2 20A
FUSE 3 30A
17
18
19
A2 12 PK/BK
F30 16 RD
A53 14 RD/YL
4
6
C101
S119 (IN PDC)
F30 18 RD
A53 16 RD/YL
A53 14 RD/YL
86
89
HEADLAMP WASHER RELAY (IN PDC)
(8W-53-4)
85
87
1
C302
F30 18 RD
10
C312
A2 12 PK/BK
F30 16 RD
F30 18 RD
V58 18 BR/YL
V53 14 RD/YL
3
C2
IGNITION SWITCH
(8W-10-26)
CIGAR LIGHTER/ POWER OUTLET
(8W-41-3)
1
POWER OUTLET (EXCEPT JR41 BASE)
(8W-41-3)
9
C3
BODY CONTROL MODULE
(8W-45-2)
1
HEADLAMP WASHER PUMP MOTOR (JR41 EXPORT)
(8W-53-4)

□□ JR41
▲▲ EXPORT

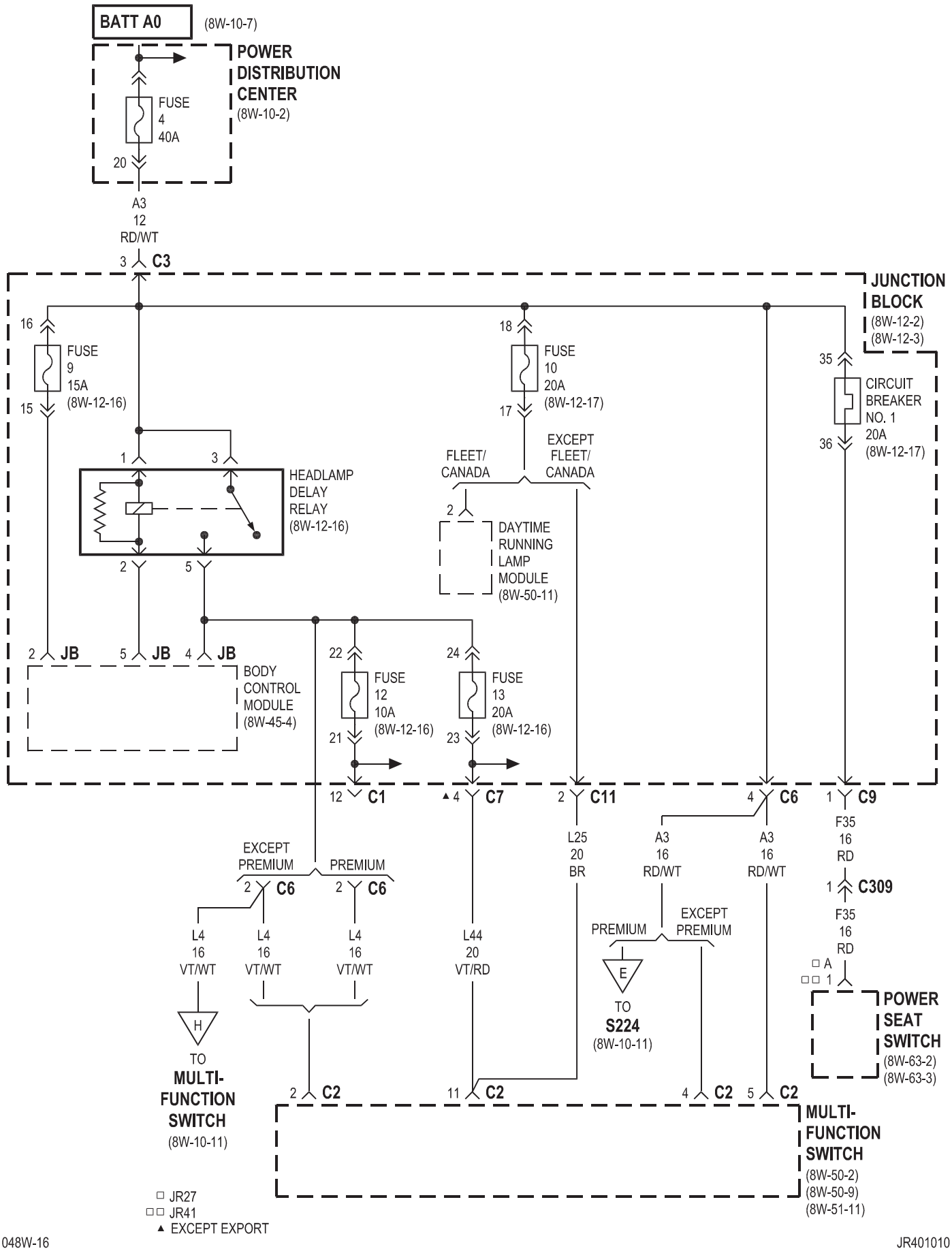
BATT A0
(8W-10-7)
POWER DISTRIBUTION CENTER
(8W-10-2)
FUSE 4 40A
20
A3 12 RD/WT
3 C3
JUNCTION BLOCK
(8W-12-2)
(8W-12-3)
16
FUSE 9 15A
(8W-12-16)
15
18
FUSE 10 20A
(8W-12-17)
17
35
CIRCUIT BREAKER NO. 1 20A
(8W-12-17)
36
1
3
HEADLAMP DELAY RELAY
(8W-12-16)
2
5
FLEET/ CANADA
EXCEPT FLEET/ CANADA
2
DAYTIME RUNNING LAMP MODULE
(8W-50-11)
2 JB
5 JB
4 JB
BODY CONTROL MODULE
(8W-45-4)
22
FUSE 12 10A
(8W-12-16)
21
24
FUSE 13 20A
(8W-12-16)
23
12 C1
▲4 C7
2 C11
4 C6
1 C9
L25 20 BR
A3 16 RD/WT
A3 16 RD/WT
F35 16 RD
1 C309
F35 16 RD
□ A
□□ 1
POWER SEAT SWITCH
(8W-63-2)
(8W-63-3)
EXCEPT PREMIUM
PREMIUM
2 C6
2 C6
L4 16 VT/WT
L4 16 VT/WT
L4 16 VT/WT
L44 20 VT/RD
PREMIUM
EXCEPT PREMIUM
E
TO S224
(8W-10-11)
H
TO MULTI-FUNCTION SWITCH
(8W-10-11)
2 C2
11 C2
4 C2
5 C2
MULTI-FUNCTION SWITCH
(8W-50-2)
(8W-50-9)
(8W-51-11)
□ JR27
□□ JR41
▲ EXCEPT EXPORT

PREMIUM

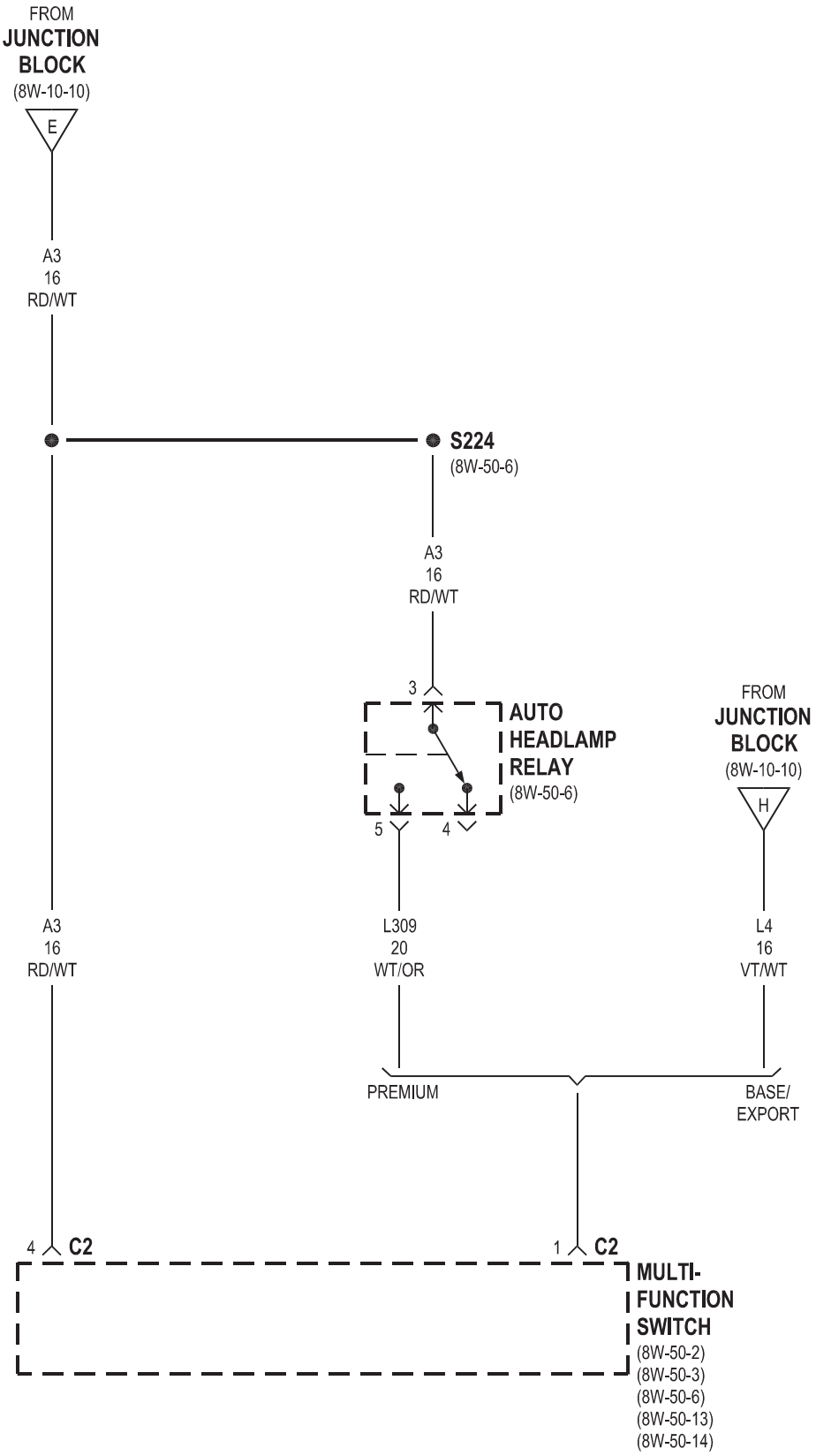
FROM
JUNCTION
BLOCK
(8W-10-10)
E
A3
16
RD/WT
S224
(8W-50-6)
A3
16
RD/WT
3
AUTO
HEADLAMP
RELAY
(8W-50-6)
5
4
FROM
JUNCTION
BLOCK
(8W-10-10)
H
A3
16
RD/WT
L309
20
WT/OR
L4
16
VT/WT
PREMIUM
BASE/
EXPORT
4
C2
1
C2
MULTI-
FUNCTION
SWITCH
(8W-50-2)
(8W-50-3)
(8W-50-6)
(8W-50-13)
(8W-50-14)

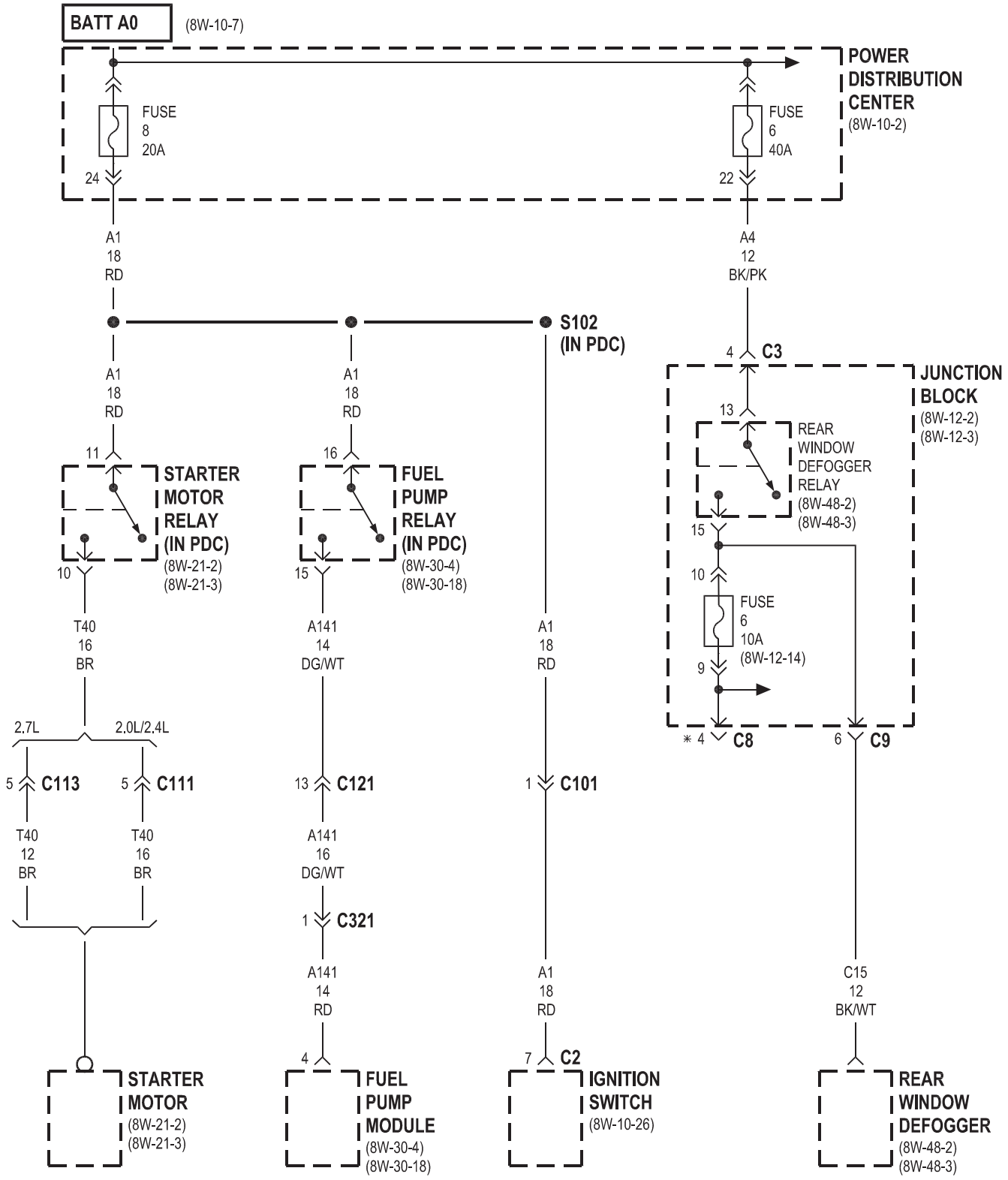

* HEATED MIRROR

2.0L/2.4L

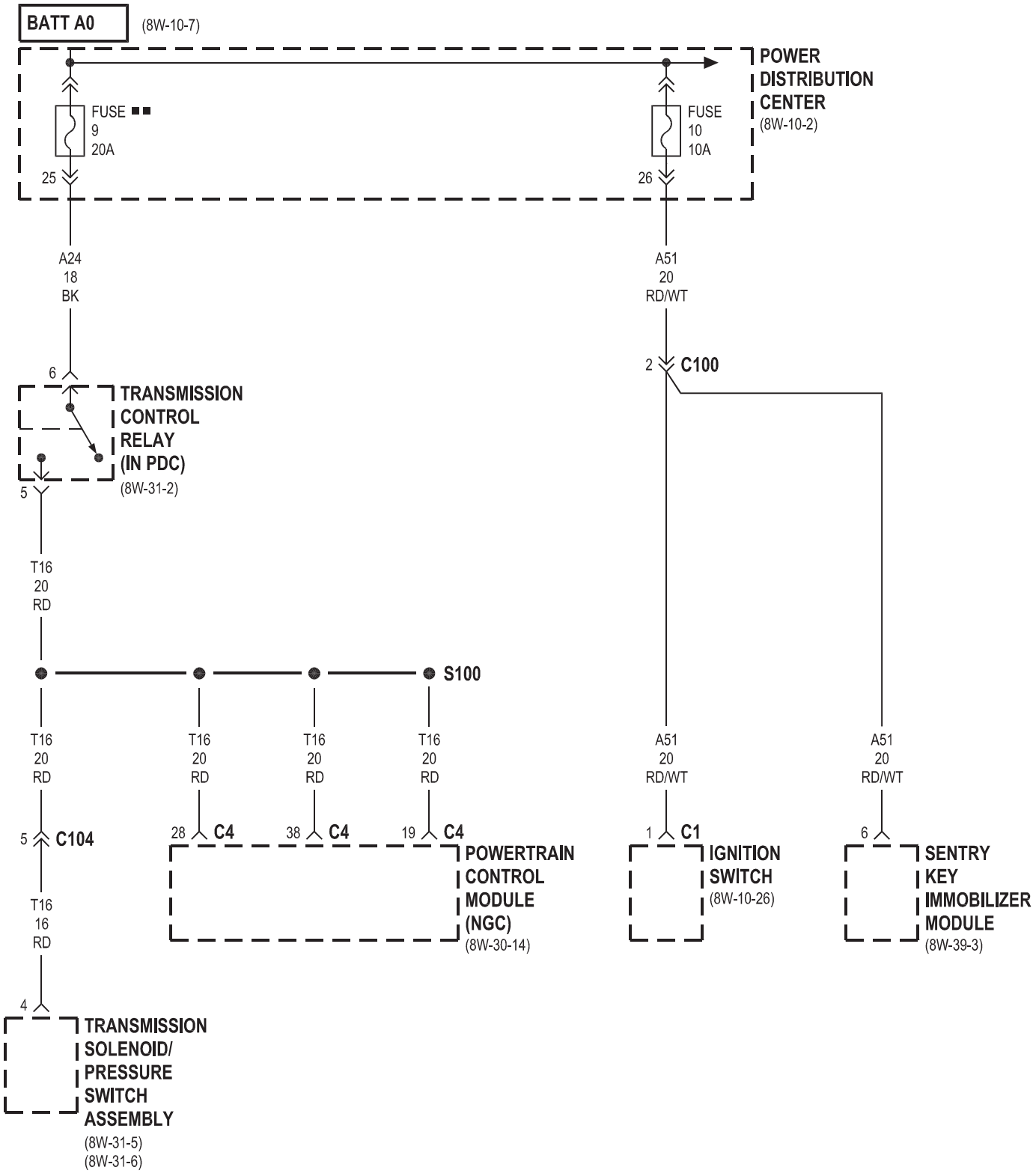
BATT A0
(8W-10-7)
POWER DISTRIBUTION CENTER
(8W-10-2)
FUSE ■■
9
20A
FUSE
10
10A
25
26
A24
18
BK
A51
20
RD/WT
6
2
C100
TRANSMISSION CONTROL RELAY (IN PDC)
(8W-31-2)
5
T16
20
RD
S100
T16
20
RD
T16
20
RD
T16
20
RD
T16
20
RD
A51
20
RD/WT
A51
20
RD/WT
5
C104
28
C4
38
C4
19
C4
1
C1
6
POWERTRAIN CONTROL MODULE (NGC)
(8W-30-14)
IGNITION SWITCH
(8W-10-26)
SENTRY KEY IMMOBILIZER MODULE
(8W-39-3)
T16
16
RD
4
TRANSMISSION SOLENOID/ PRESSURE SWITCH ASSEMBLY
(8W-31-5)
(8W-31-6)

■■ EATX

2.7L

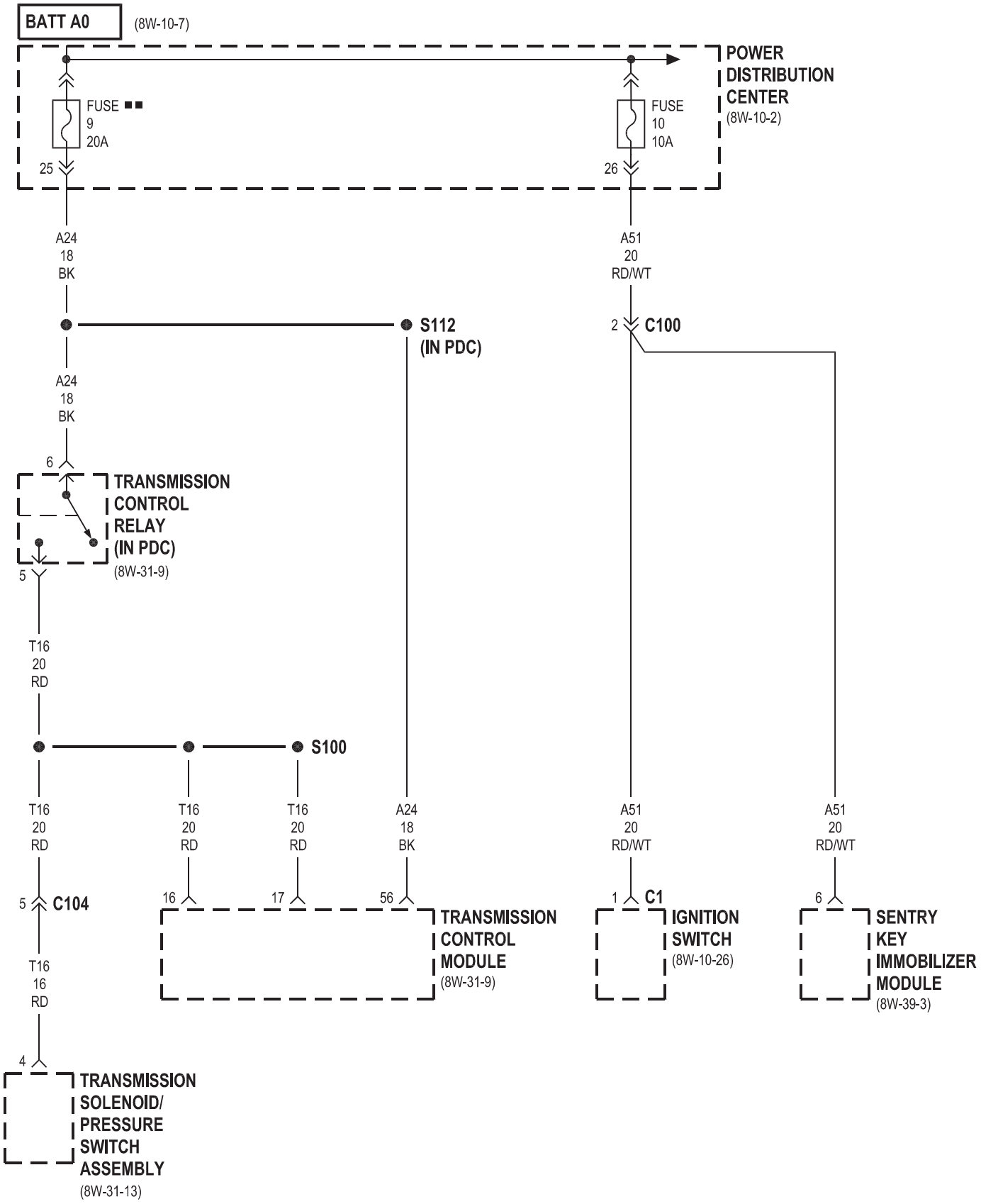
BATT A0
(8W-10-7)
POWER DISTRIBUTION CENTER
(8W-10-2)
FUSE ■■
9
20A
FUSE
10
10A
25
26
A24
18
BK
A51
20
RD/WT
S112
(IN PDC)
2
C100
A24
18
BK
6
TRANSMISSION CONTROL RELAY (IN PDC)
(8W-31-9)
5
T16
20
RD
S100
T16
20
RD
T16
20
RD
T16
20
RD
A24
18
BK
A51
20
RD/WT
A51
20
RD/WT
5
C104
16
17
56
1
C1
6
TRANSMISSION CONTROL MODULE
(8W-31-9)
IGNITION SWITCH
(8W-10-26)
SENTRY KEY IMMOBILIZER MODULE
(8W-39-3)
T16
16
RD
4
TRANSMISSION SOLENOID/ PRESSURE SWITCH ASSEMBLY
(8W-31-13)

■■ EATX

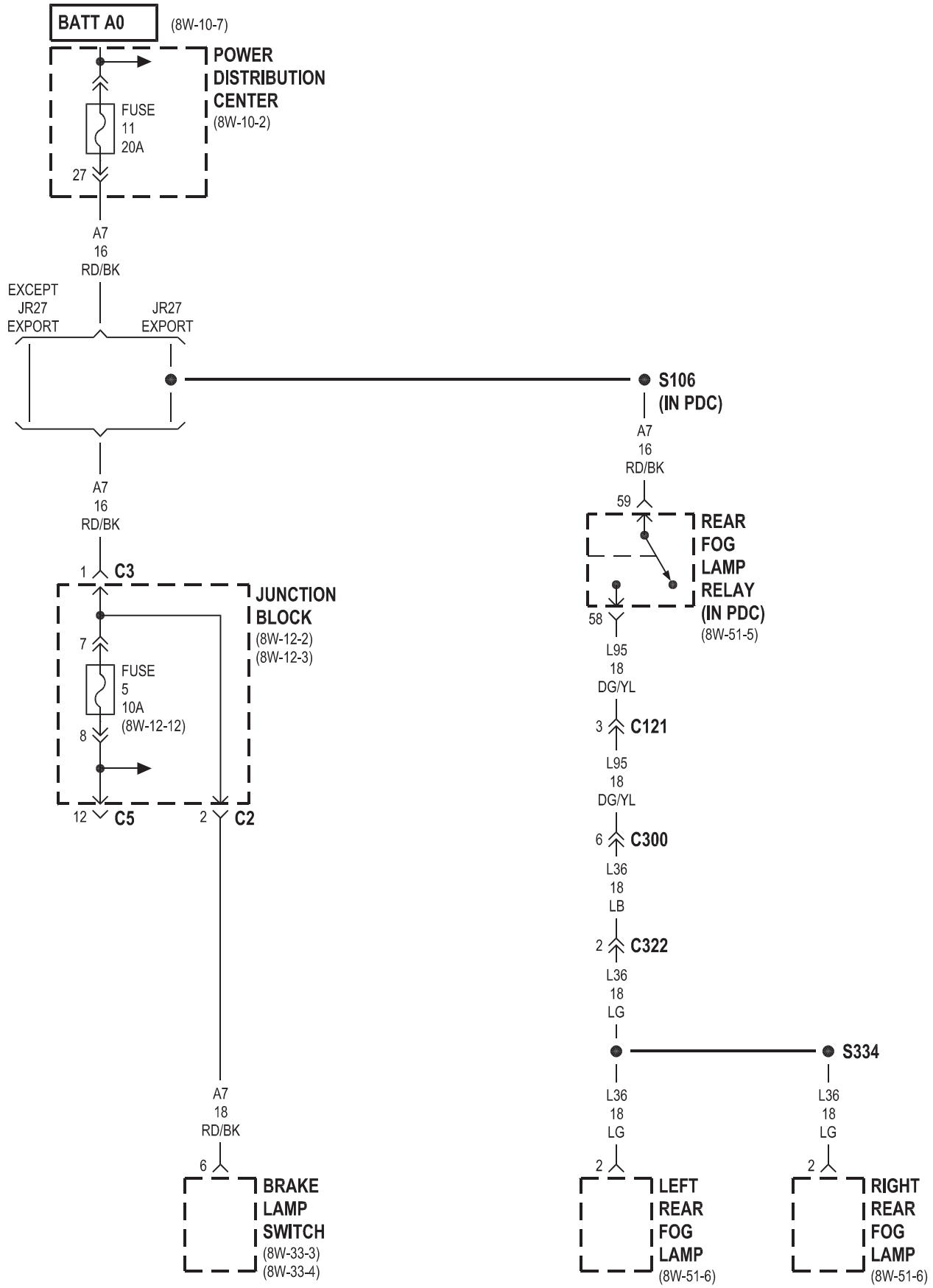
BATT A0
(8W-10-7)
POWER DISTRIBUTION CENTER
(8W-10-2)
FUSE 11 20A
27
A7 16 RD/BK
EXCEPT JR27 EXPORT
JR27 EXPORT
S106 (IN PDC)
A7 16 RD/BK
59
REAR FOG LAMP RELAY (IN PDC)
(8W-51-5)
58
L95 18 DG/YL
3 C121
L95 18 DG/YL
6 C300
L36 18 LB
2 C322
L36 18 LG
S334
L36 18 LG
2
LEFT REAR FOG LAMP
(8W-51-6)
L36 18 LG
2
RIGHT REAR FOG LAMP
(8W-51-6)
A7 16 RD/BK
1 C3
JUNCTION BLOCK
(8W-12-2)
(8W-12-3)
7
FUSE 5 10A
(8W-12-12)
8
12 C5
2 C2
A7 18 RD/BK
6
BRAKE LAMP SWITCH
(8W-33-3)
(8W-33-4)

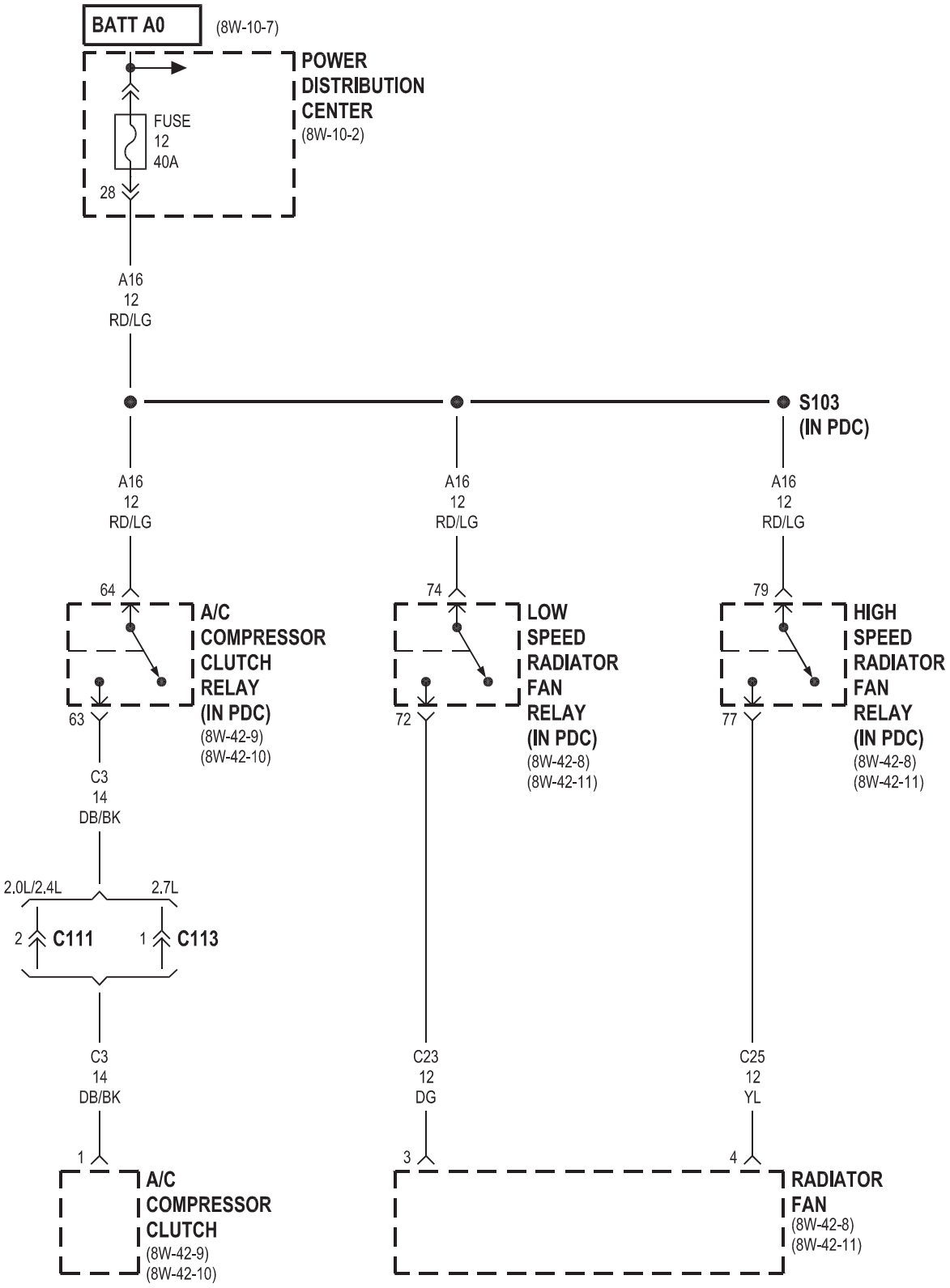
BATT A0
(8W-10-7)
POWER DISTRIBUTION CENTER
(8W-10-2)
FUSE 12 40A
28
A16 12 RD/LG
S103 (IN PDC)
A16 12 RD/LG
A16 12 RD/LG
A16 12 RD/LG
64
74
79
A/C COMPRESSOR CLUTCH RELAY (IN PDC)
(8W-42-9)
(8W-42-10)
LOW SPEED RADIATOR FAN RELAY (IN PDC)
(8W-42-8)
(8W-42-11)
HIGH SPEED RADIATOR FAN RELAY (IN PDC)
(8W-42-8)
(8W-42-11)
63
72
77
C3 14 DB/BK
2.0L/2.4L
2.7L
2 C111
1 C113
C3 14 DB/BK
C23 12 DG
C25 12 YL
1
3
4
A/C COMPRESSOR CLUTCH
(8W-42-9)
(8W-42-10)
RADIATOR FAN
(8W-42-8)
(8W-42-11)

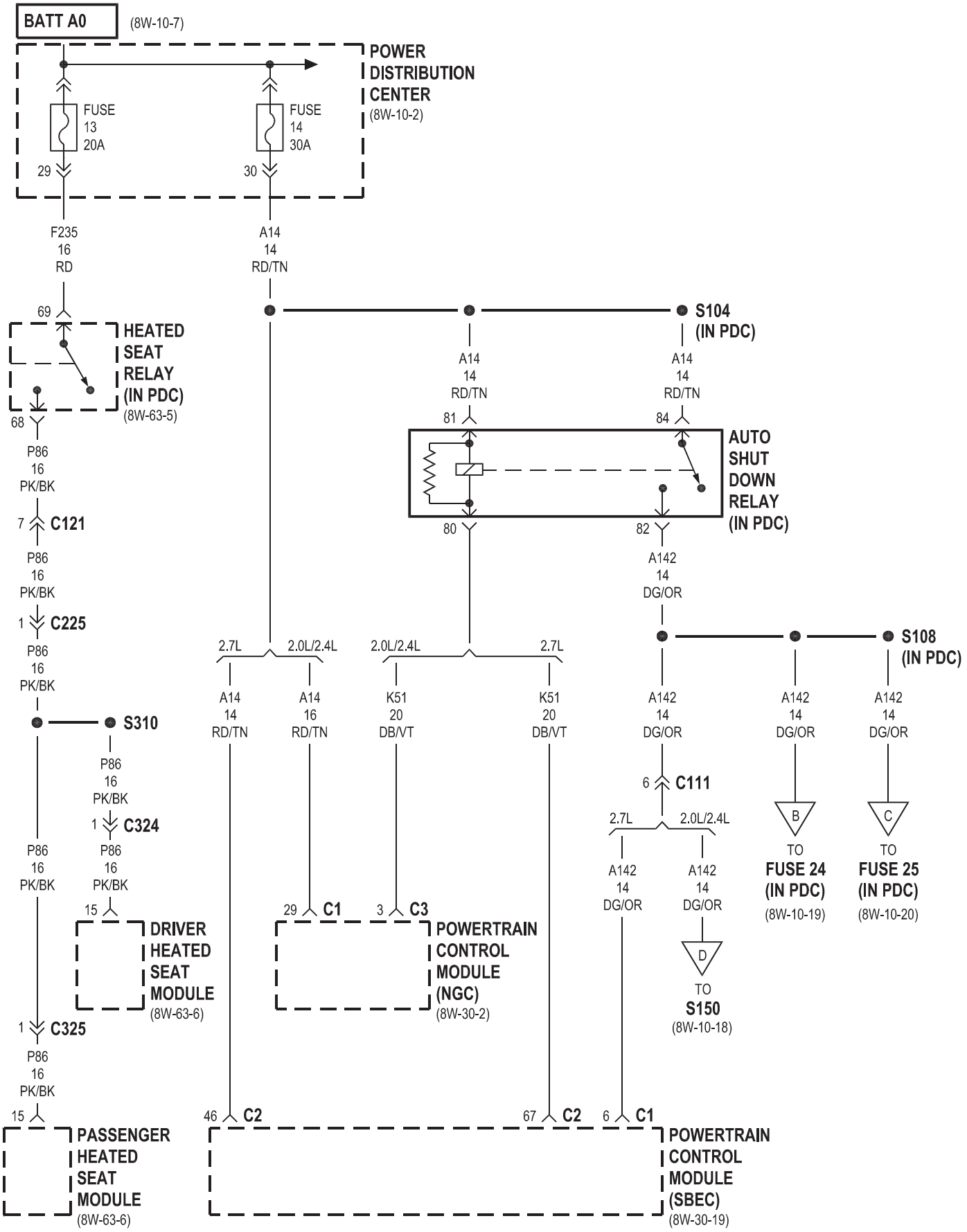
BATT A0
(8W-10-7)
POWER DISTRIBUTION CENTER
(8W-10-2)
FUSE 13 20A
FUSE 14 30A
29
30
F235 16 RD
A14 14 RD/TN
69
HEATED SEAT RELAY (IN PDC)
(8W-63-5)
68
P86 16 PK/BK
7
C121
P86 16 PK/BK
1
C225
P86 16 PK/BK
S104 (IN PDC)
A14 14 RD/TN
A14 14 RD/TN
81
84
AUTO SHUT DOWN RELAY (IN PDC)
80
82
A142 14 DG/OR
S108 (IN PDC)
2.7L
2.0L/2.4L
2.0L/2.4L
2.7L
A14 14 RD/TN
A14 16 RD/TN
K51 20 DB/VT
K51 20 DB/VT
A142 14 DG/OR
A142 14 DG/OR
A142 14 DG/OR
S310
P86 16 PK/BK
1
C324
P86 16 PK/BK
P86 16 PK/BK
15
DRIVER HEATED SEAT MODULE
(8W-63-6)
29
C1
3
C3
POWERTRAIN CONTROL MODULE (NGC)
(8W-30-2)
6
C111
2.7L
2.0L/2.4L
A142 14 DG/OR
A142 14 DG/OR
B
TO FUSE 24 (IN PDC)
(8W-10-19)
C
TO FUSE 25 (IN PDC)
(8W-10-20)
D
TO S150
(8W-10-18)
1
C325
P86 16 PK/BK
15
PASSENGER HEATED SEAT MODULE
(8W-63-6)
46
C2
67
C2
6
C1
POWERTRAIN CONTROL MODULE (SBEC)
(8W-30-19)

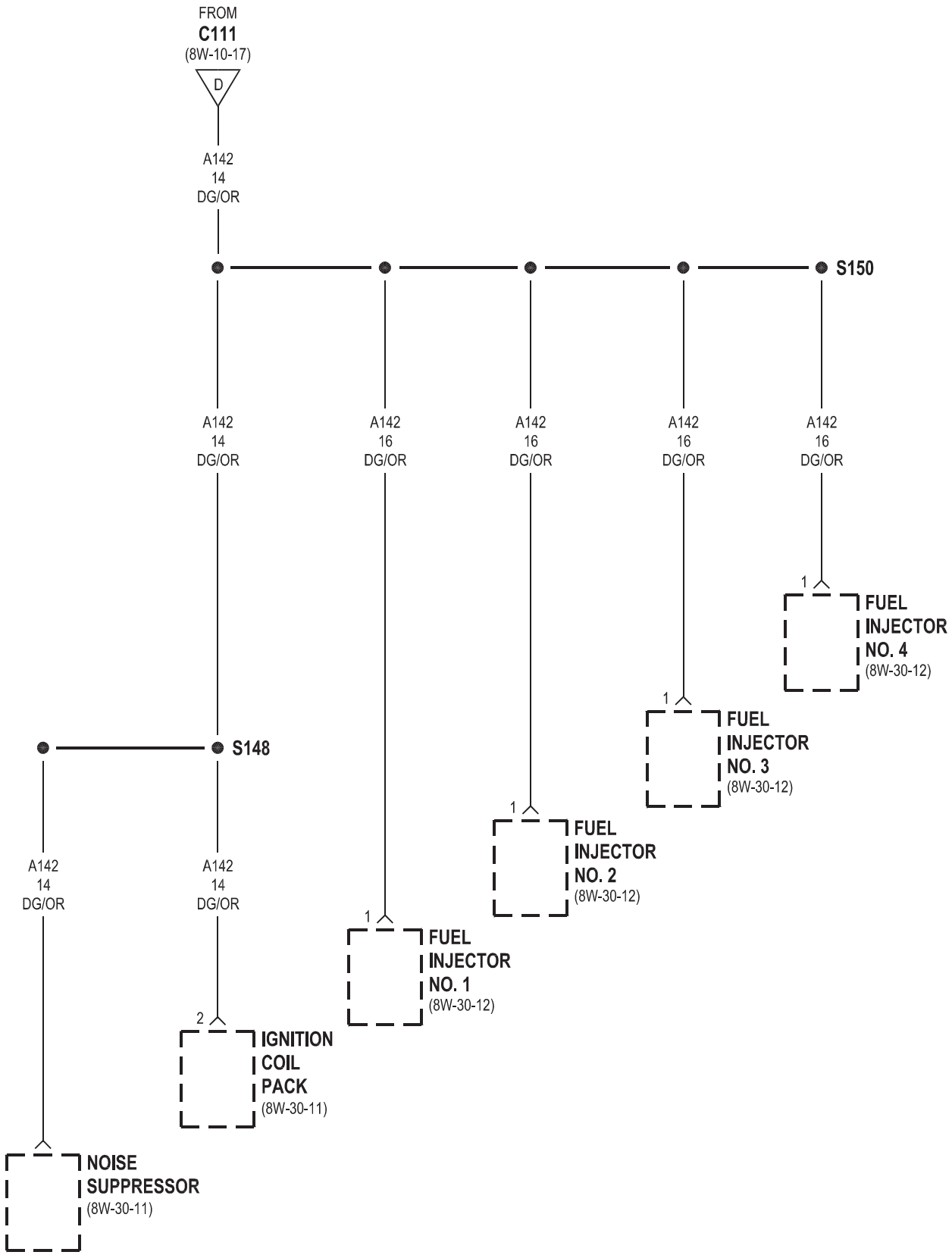
FROM
C111
(8W-10-17)
D
A142
14
DG/OR
S150
A142
14
DG/OR
A142
16
DG/OR
A142
16
DG/OR
A142
16
DG/OR
A142
16
DG/OR
1
FUEL
INJECTOR
NO. 4
(8W-30-12)
1
FUEL
INJECTOR
NO. 3
(8W-30-12)
S148
1
FUEL
INJECTOR
NO. 2
(8W-30-12)
A142
14
DG/OR
A142
14
DG/OR
1
FUEL
INJECTOR
NO. 1
(8W-30-12)
2
IGNITION
COIL
PACK
(8W-30-11)
NOISE
SUPPRESSOR
(8W-30-11)

2.7L

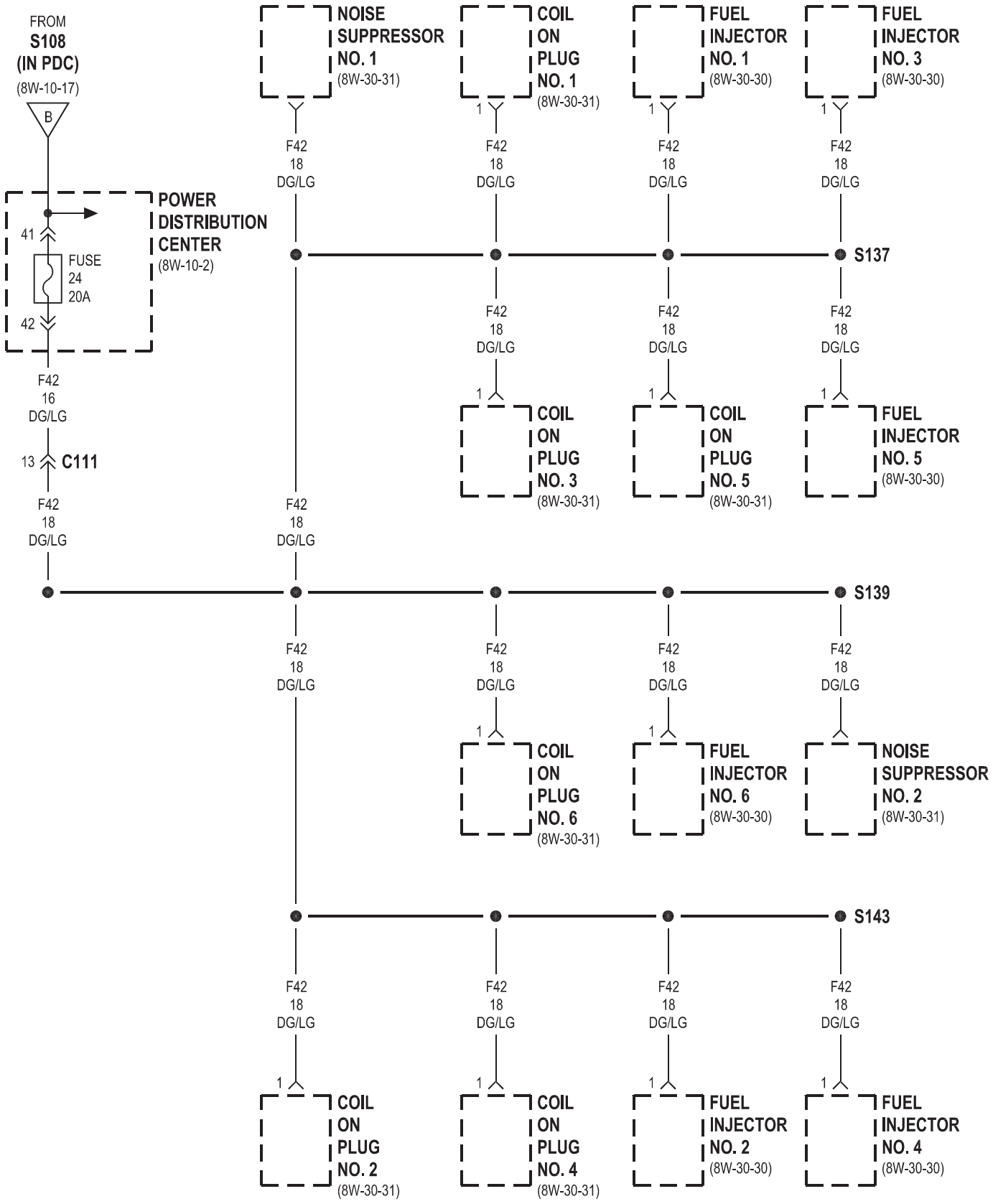
FROM
S108
(IN PDC)
(8W-10-17)
B
POWER DISTRIBUTION CENTER
(8W-10-2)
41
FUSE
24
20A
42
F42
16
DG/LG
13
C111
F42
18
DG/LG
NOISE SUPPRESSOR NO. 1
(8W-30-31)
COIL ON PLUG NO. 1
(8W-30-31)
FUEL INJECTOR NO. 1
(8W-30-30)
FUEL INJECTOR NO. 3
(8W-30-30)
S137
COIL ON PLUG NO. 3
(8W-30-31)
COIL ON PLUG NO. 5
(8W-30-31)
FUEL INJECTOR NO. 5
(8W-30-30)
S139
COIL ON PLUG NO. 6
(8W-30-31)
FUEL INJECTOR NO. 6
(8W-30-30)
NOISE SUPPRESSOR NO. 2
(8W-30-31)
S143
COIL ON PLUG NO. 2
(8W-30-31)
COIL ON PLUG NO. 4
(8W-30-31)
FUEL INJECTOR NO. 2
(8W-30-30)
FUEL INJECTOR NO. 4
(8W-30-30)

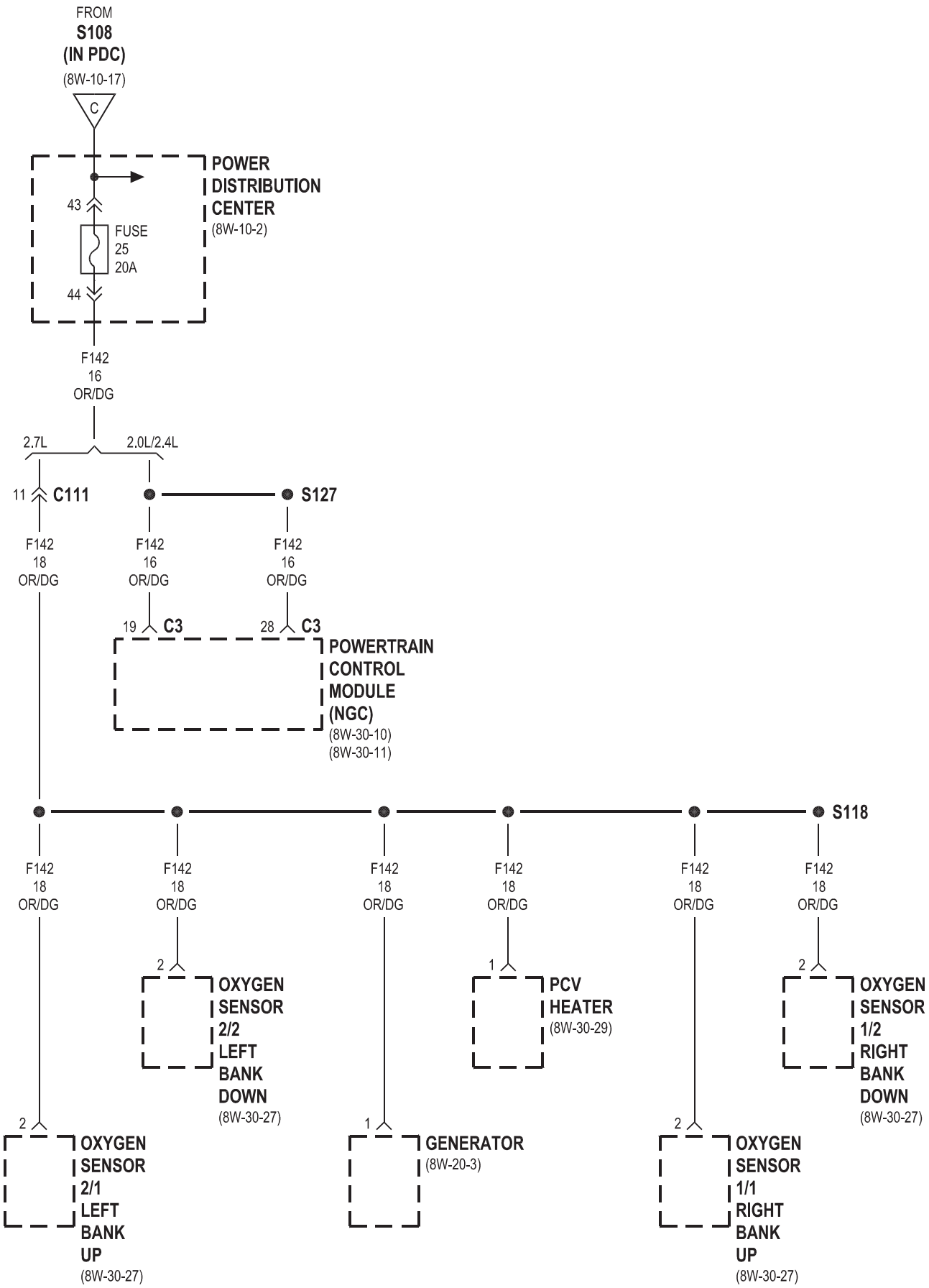
FROM
S108
(IN PDC)
(8W-10-17)
C
POWER
DISTRIBUTION
CENTER
(8W-10-2)
43
FUSE
25
20A
44
F142
16
OR/DG
2.7L
2.0L/2.4L
11
C111
S127
F142
18
OR/DG
F142
16
OR/DG
F142
16
OR/DG
19
C3
28
C3
POWERTRAIN
CONTROL
MODULE
(NGC)
(8W-30-10)
(8W-30-11)
S118
F142
18
OR/DG
F142
18
OR/DG
F142
18
OR/DG
F142
18
OR/DG
F142
18
OR/DG
F142
18
OR/DG
2
OXYGEN
SENSOR
2/2
LEFT
BANK
DOWN
(8W-30-27)
1
PCV
HEATER
(8W-30-29)
2
OXYGEN
SENSOR
1/2
RIGHT
BANK
DOWN
(8W-30-27)
2
OXYGEN
SENSOR
2/1
LEFT
BANK
UP
(8W-30-27)
1
GENERATOR
(8W-20-3)
2
OXYGEN
SENSOR
1/1
RIGHT
BANK
UP
(8W-30-27)

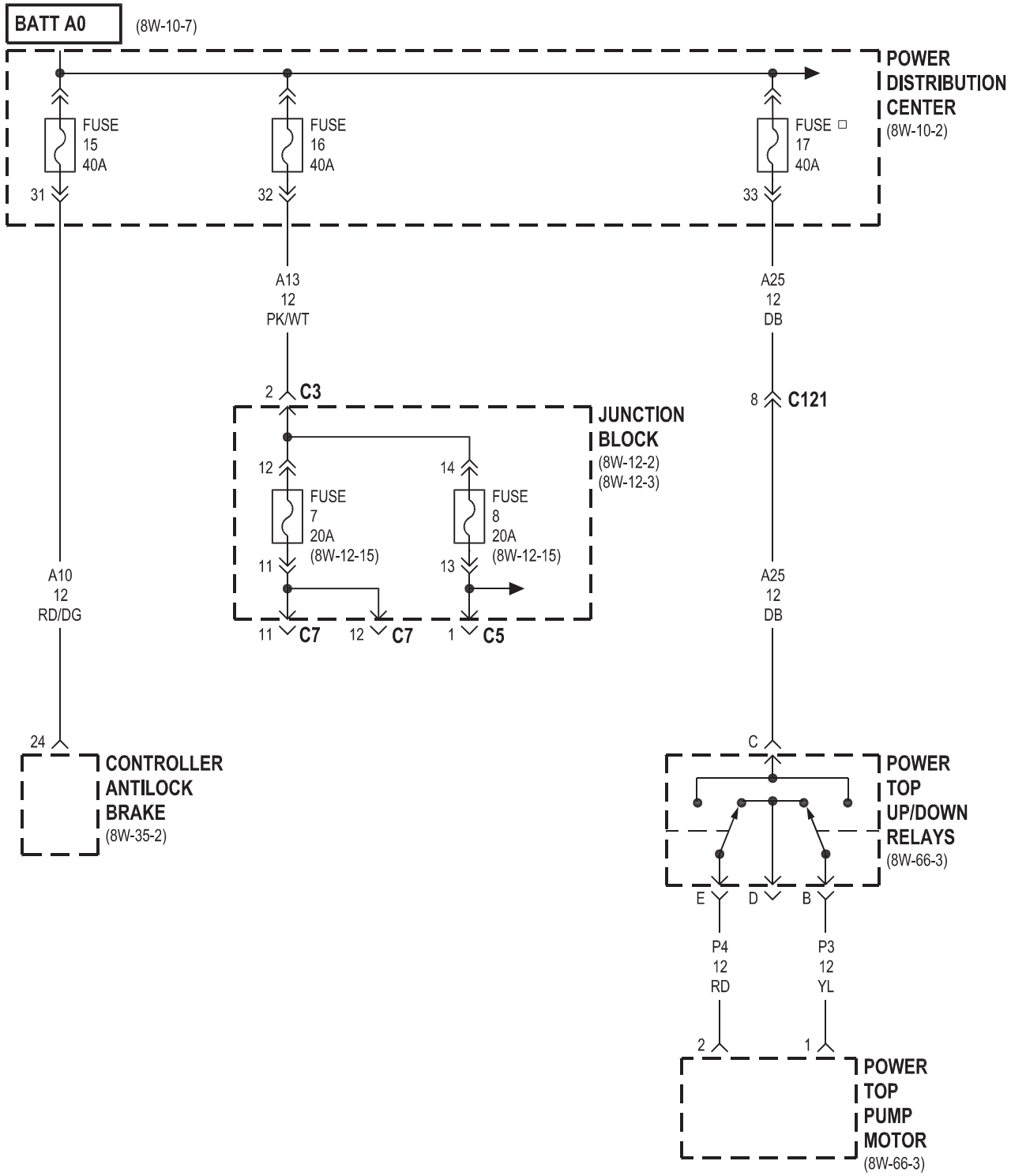
BATT A0
(8W-10-7)
POWER DISTRIBUTION CENTER
(8W-10-2)
FUSE 15 40A
FUSE 16 40A
FUSE 17 40A
31
32
33
A13 12 PK/WT
A25 12 DB
2 C3
8 C121
JUNCTION BLOCK
(8W-12-2)
(8W-12-3)
12
14
FUSE 7 20A (8W-12-15)
FUSE 8 20A (8W-12-15)
11
13
A10 12 RD/DG
A25 12 DB
11 C7
12 C7
1 C5
24
CONTROLLER ANTILOCK BRAKE
(8W-35-2)
C
POWER TOP UP/DOWN RELAYS
(8W-66-3)
E
D
B
P4 12 RD
P3 12 YL
2
1
POWER TOP PUMP MOTOR
(8W-66-3)

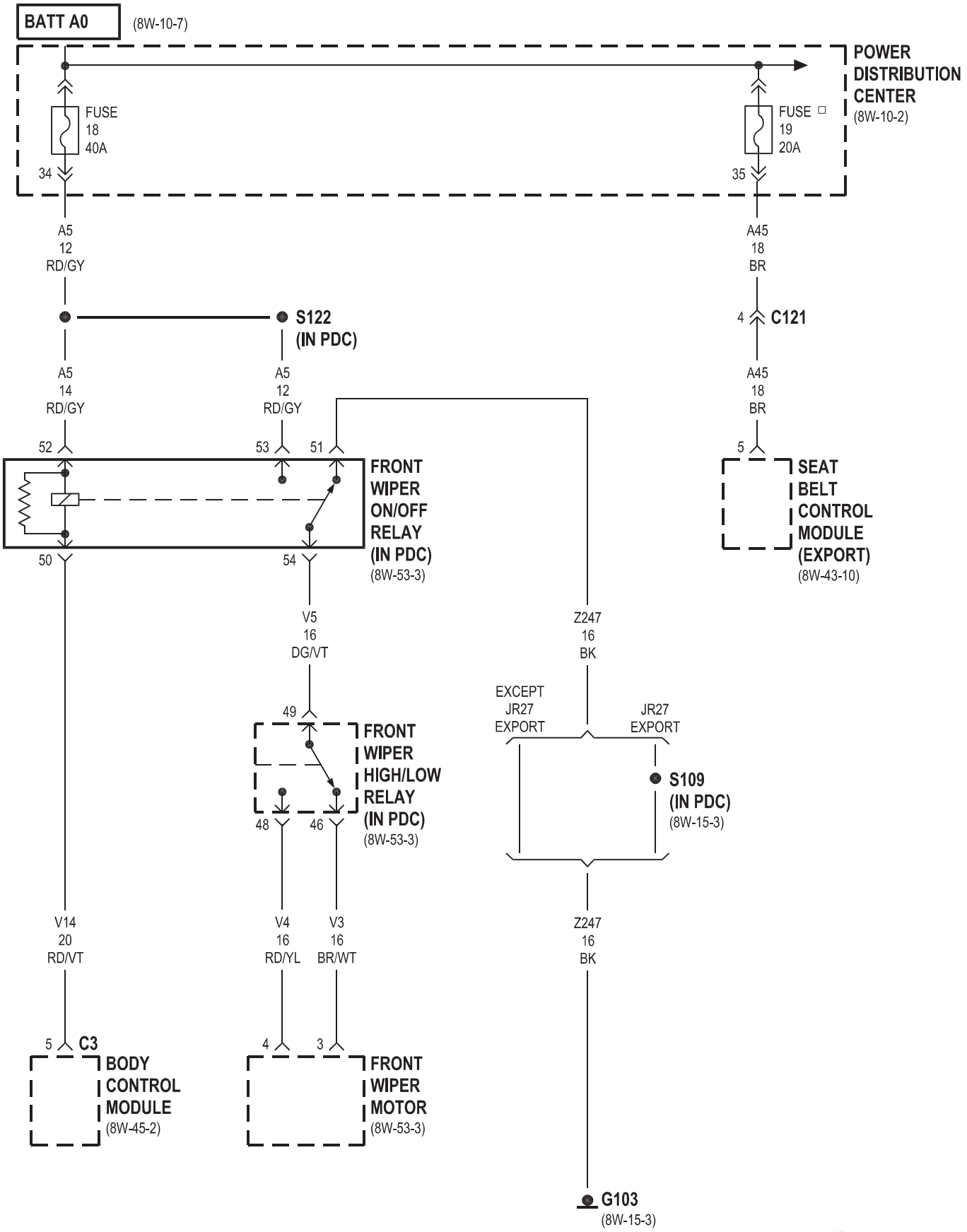
BATT A0
(8W-10-7)
POWER DISTRIBUTION CENTER
(8W-10-2)
FUSE 18 40A
FUSE 19 20A
34
35
A5 12 RD/GY
A45 18 BR
S122 (IN PDC)
4
C121
A5 14 RD/GY
A5 12 RD/GY
A45 18 BR
52
53
51
5
FRONT WIPER ON/OFF RELAY (IN PDC)
(8W-53-3)
SEAT BELT CONTROL MODULE (EXPORT)
(8W-43-10)
50
54
V5 16 DG/VT
Z247 16 BK
49
EXCEPT JR27 EXPORT
JR27 EXPORT
FRONT WIPER HIGH/LOW RELAY (IN PDC)
(8W-53-3)
S109 (IN PDC)
(8W-15-3)
48
46
V14 20 RD/VT
V4 16 RD/YL
V3 16 BR/WT
Z247 16 BK
5
C3
4
3
BODY CONTROL MODULE
(8W-45-2)
FRONT WIPER MOTOR
(8W-53-3)
G103
(8W-15-3)
JR27

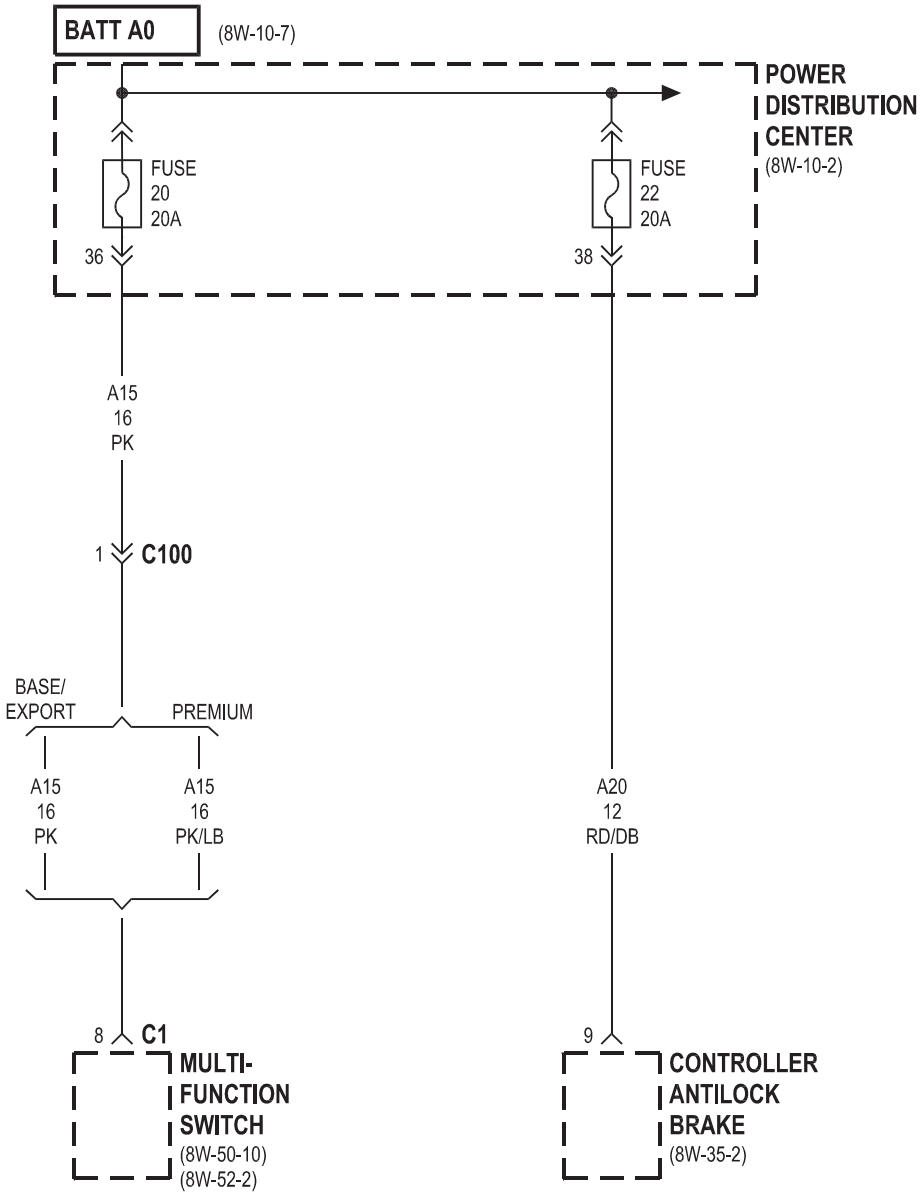
BATT A0
(8W-10-7)
POWER DISTRIBUTION CENTER
(8W-10-2)
FUSE 20 20A
FUSE 22 20A
36
38
A15 16 PK
1
C100
BASE/ EXPORT
PREMIUM
A15 16 PK
A15 16 PK/LB
A20 12 RD/DB
8
C1
9
MULTI-FUNCTION SWITCH
(8W-50-10)
(8W-52-2)
CONTROLLER ANTILOCK BRAKE
(8W-35-2)

2.0l/2.4L

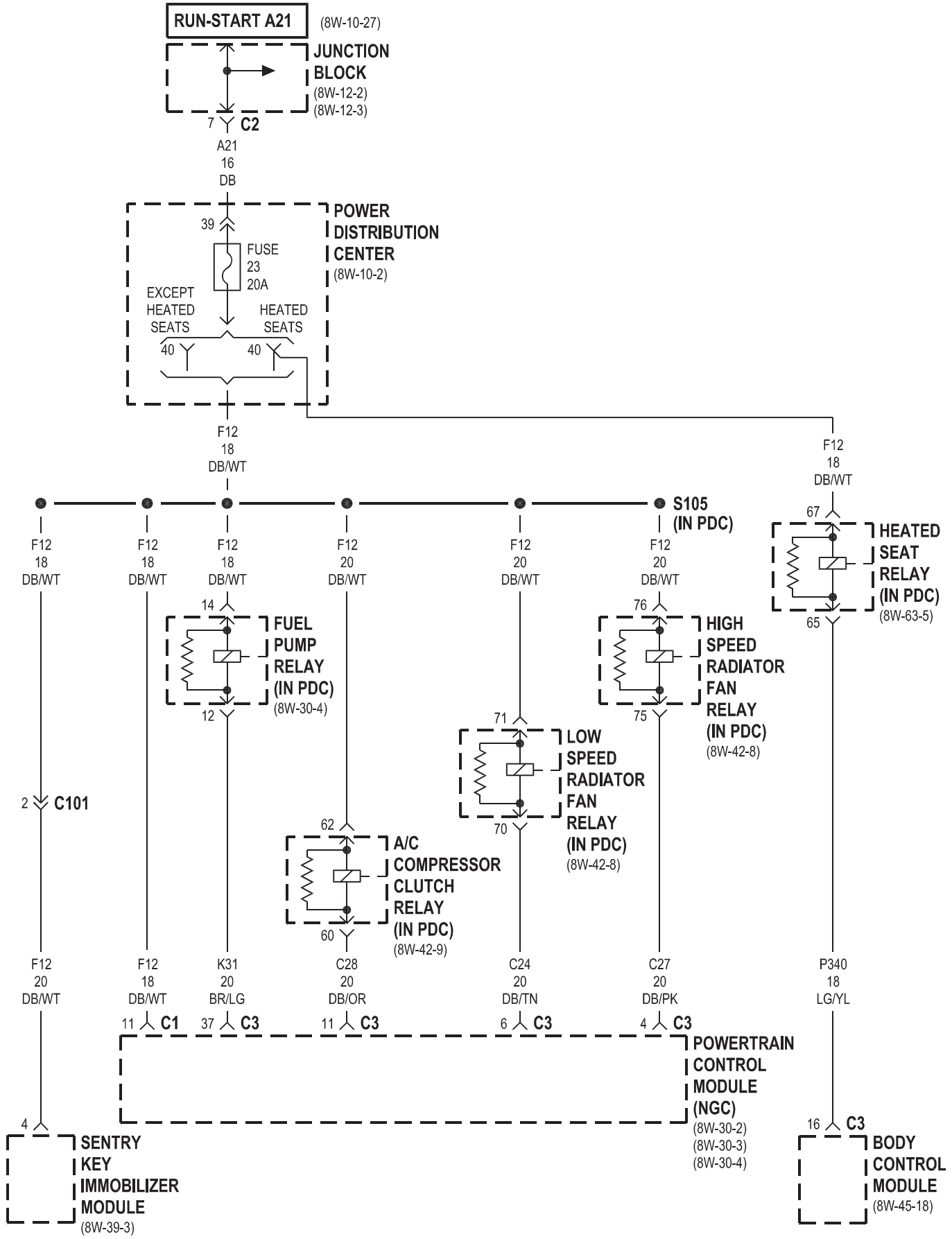
RUN-START A21
(8W-10-27)
JUNCTION BLOCK
(8W-12-2)
(8W-12-3)
7 C2
A21
16
DB
POWER DISTRIBUTION CENTER
(8W-10-2)
39
FUSE
23
20A
EXCEPT HEATED SEATS
HEATED SEATS
40
40
F12
18
DB/WT
S105
(IN PDC)
F12
18
DB/WT
F12
18
DB/WT
F12
18
DB/WT
F12
20
DB/WT
F12
20
DB/WT
F12
20
DB/WT
67
HEATED SEAT RELAY
(IN PDC)
(8W-63-5)
65
14
FUEL PUMP RELAY
(IN PDC)
(8W-30-4)
12
76
HIGH SPEED RADIATOR FAN RELAY
(IN PDC)
(8W-42-8)
75
71
LOW SPEED RADIATOR FAN RELAY
(IN PDC)
(8W-42-8)
70
2 C101
62
A/C COMPRESSOR CLUTCH RELAY
(IN PDC)
(8W-42-9)
60
F12
20
DB/WT
F12
18
DB/WT
K31
20
BR/LG
C28
20
DB/OR
C24
20
DB/TN
C27
20
DB/PK
P340
18
LG/YL
11 C1
37 C3
11 C3
6 C3
4 C3
POWERTRAIN CONTROL MODULE
(NGC)
(8W-30-2)
(8W-30-3)
(8W-30-4)
4
SENTRY KEY IMMOBILIZER MODULE
(8W-39-3)
16 C3
BODY CONTROL MODULE
(8W-45-18)

2.7L

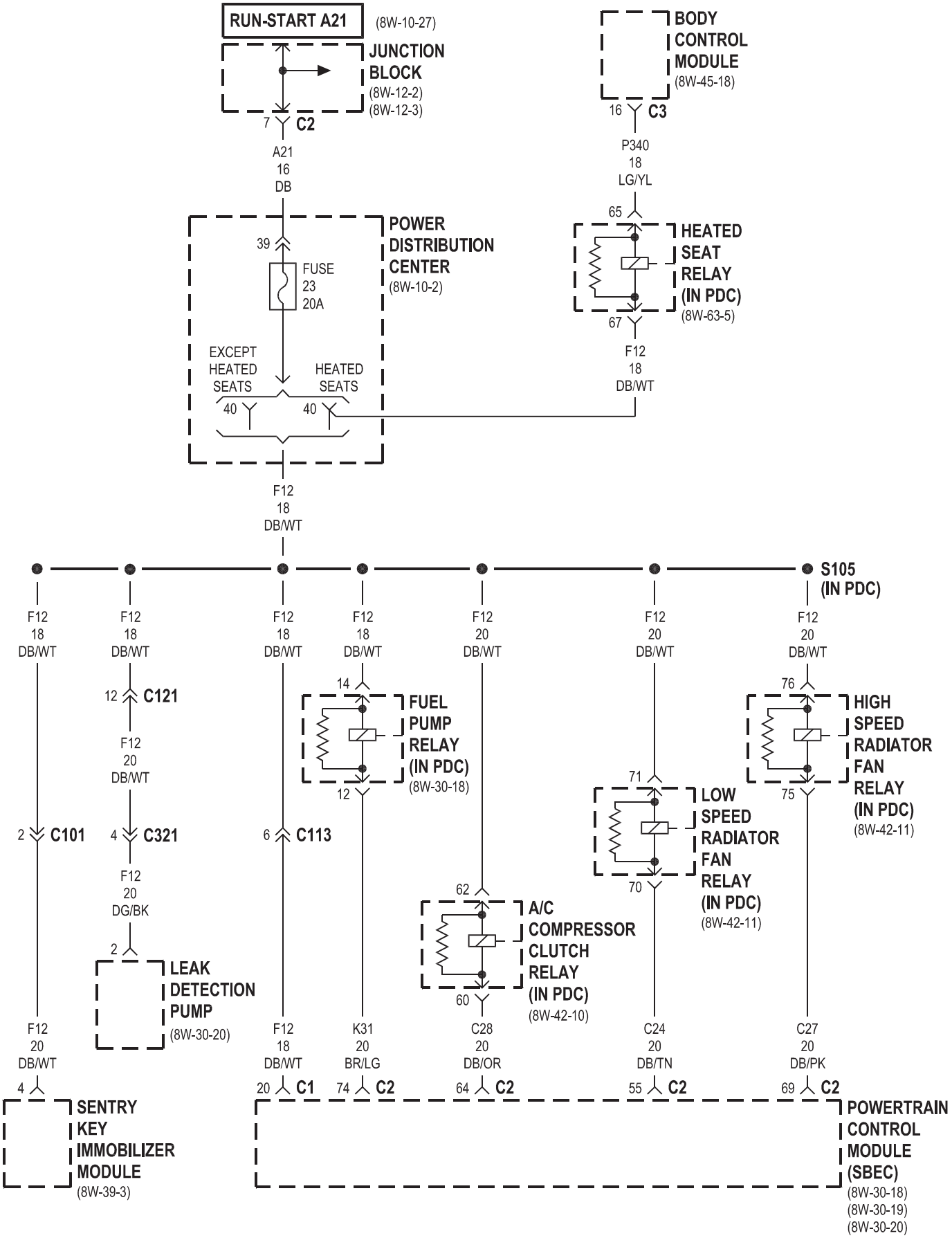
RUN-START A21
(8W-10-27)
JUNCTION BLOCK
(8W-12-2)
(8W-12-3)
7
C2
A21
16
DB
BODY CONTROL MODULE
(8W-45-18)
16
C3
P340
18
LG/YL
POWER DISTRIBUTION CENTER
(8W-10-2)
39
FUSE
23
20A
EXCEPT HEATED SEATS
HEATED SEATS
40
40
65
HEATED SEAT RELAY (IN PDC)
(8W-63-5)
67
F12
18
DB/WT
F12
18
DB/WT
S105
(IN PDC)
F12
18
DB/WT
F12
18
DB/WT
F12
18
DB/WT
F12
18
DB/WT
F12
20
DB/WT
F12
20
DB/WT
F12
20
DB/WT
12
C121
F12
20
DB/WT
14
FUEL PUMP RELAY (IN PDC)
(8W-30-18)
12
76
HIGH SPEED RADIATOR FAN RELAY (IN PDC)
(8W-42-11)
75
71
LOW SPEED RADIATOR FAN RELAY (IN PDC)
(8W-42-11)
70
2
C101
4
C321
6
C113
F12
20
DG/BK
2
LEAK DETECTION PUMP
(8W-30-20)
62
A/C COMPRESSOR CLUTCH RELAY (IN PDC)
(8W-42-10)
60
F12
20
DB/WT
F12
18
DB/WT
K31
20
BR/LG
C28
20
DB/OR
C24
20
DB/TN
C27
20
DB/PK
4
20
C1
74
C2
64
C2
55
C2
69
C2
SENTRY KEY IMMOBILIZER MODULE
(8W-39-3)
POWERTRAIN CONTROL MODULE (SBEC)
(8W-30-18)
(8W-30-19)
(8W-30-20)

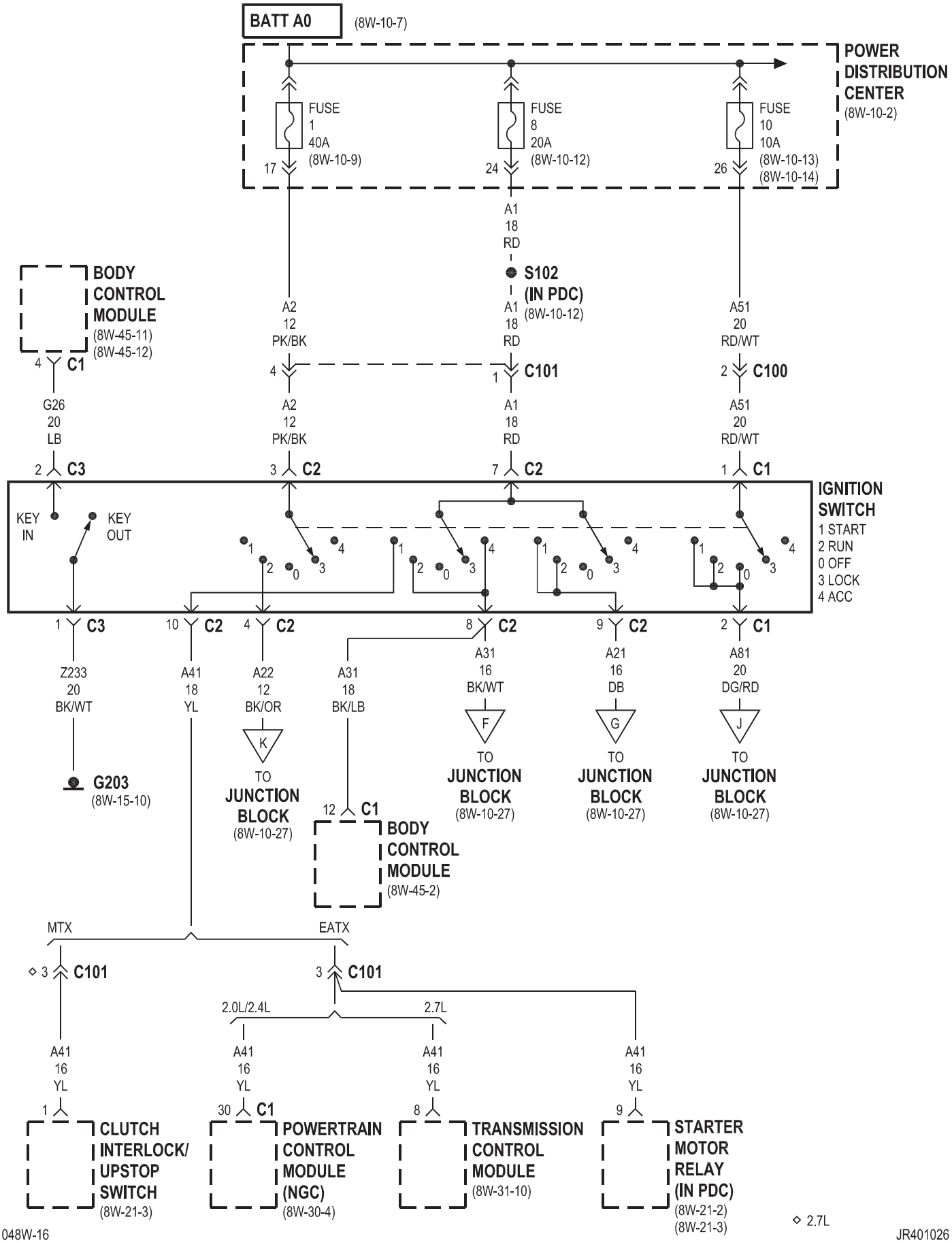
BATT A0
(8W-10-7)
POWER DISTRIBUTION CENTER
(8W-10-2)
FUSE 1 40A (8W-10-9)
FUSE 8 20A (8W-10-12)
FUSE 10 10A (8W-10-13) (8W-10-14)
17
24
26
A1 18 RD
S102 (IN PDC)
(8W-10-12)
BODY CONTROL MODULE
(8W-45-11)
(8W-45-12)
A2 12 PK/BK
A51 20 RD/WT
4 C1
4
1 C101
2 C100
G26 20 LB
A2 12 PK/BK
A1 18 RD
A51 20 RD/WT
2 C3
3 C2
7 C2
1 C1
IGNITION SWITCH
1 START
2 RUN
0 OFF
3 LOCK
4 ACC
KEY IN
KEY OUT
1 C3
10 C2
4 C2
8 C2
9 C2
2 C1
Z233 20 BK/WT
A41 18 YL
A22 12 BK/OR
A31 18 BK/LB
A31 16 BK/WT
A21 16 DB
A81 20 DG/RD
K
F
G
J
TO JUNCTION BLOCK
(8W-10-27)
G203
(8W-15-10)
12 C1
BODY CONTROL MODULE
(8W-45-2)
MTX
EATX
◇ 3 C101
3 C101
2.0L/2.4L
2.7L
A41 16 YL
1
30 C1
8
9
CLUTCH INTERLOCK/ UPSTOP SWITCH
(8W-21-3)
POWERTRAIN CONTROL MODULE (NGC)
(8W-30-4)
TRANSMISSION CONTROL MODULE
(8W-31-10)
STARTER MOTOR RELAY (IN PDC)
(8W-21-2)
(8W-21-3)
◇ 2.7L

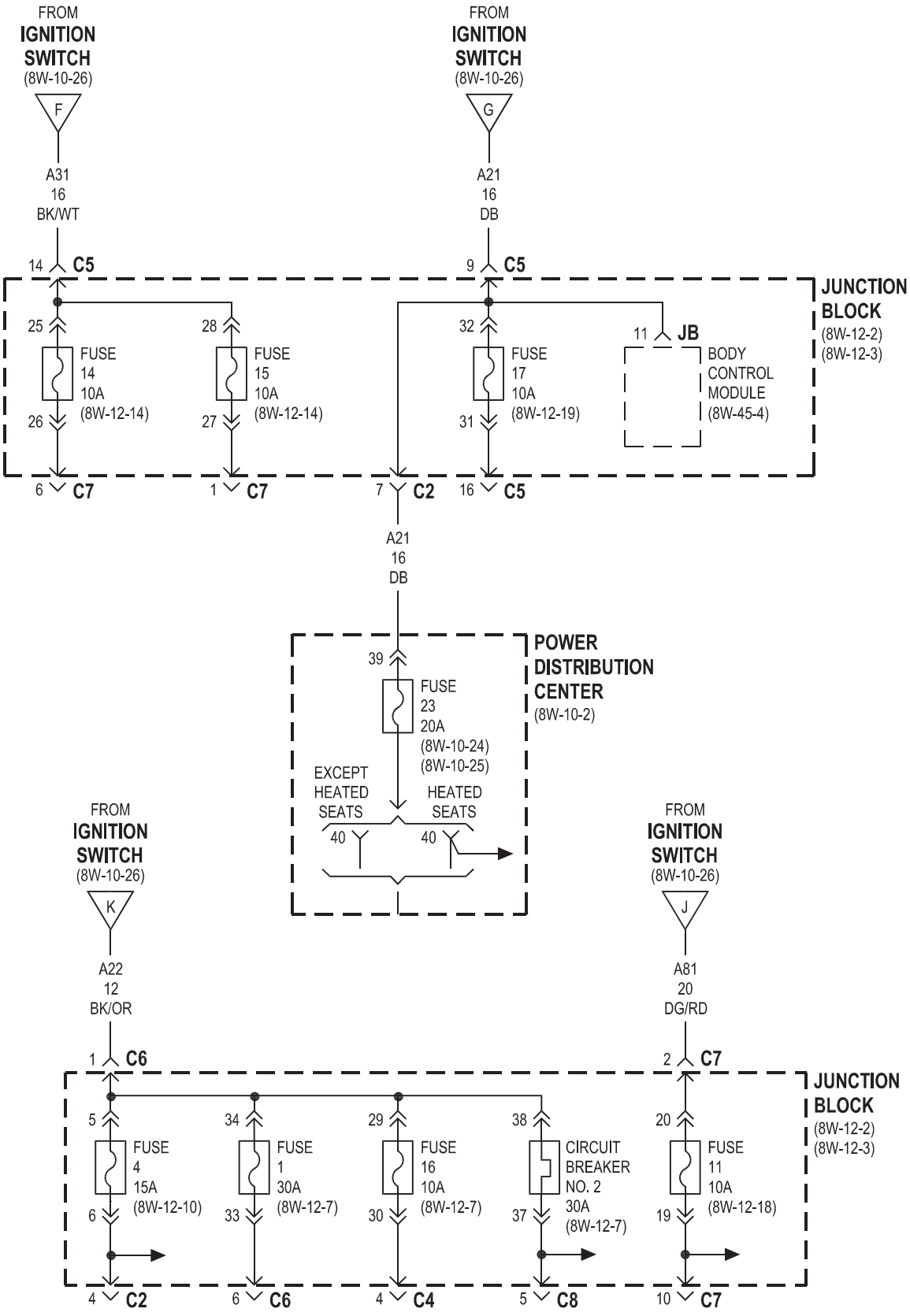
FROM
IGNITION
SWITCH
(8W-10-26)
F
A31
16
BK/WT
14 C5
FROM
IGNITION
SWITCH
(8W-10-26)
G
A21
16
DB
9 C5
JUNCTION
BLOCK
(8W-12-2)
(8W-12-3)
25
FUSE
14
10A
(8W-12-14)
26
6 C7
28
FUSE
15
10A
(8W-12-14)
27
1 C7
32
FUSE
17
10A
(8W-12-19)
31
16 C5
11 JB
BODY
CONTROL
MODULE
(8W-45-4)
7 C2
A21
16
DB
POWER
DISTRIBUTION
CENTER
(8W-10-2)
39
FUSE
23
20A
(8W-10-24)
(8W-10-25)
EXCEPT
HEATED
SEATS
40
HEATED
SEATS
40
FROM
IGNITION
SWITCH
(8W-10-26)
K
A22
12
BK/OR
1 C6
FROM
IGNITION
SWITCH
(8W-10-26)
J
A81
20
DG/RD
2 C7
JUNCTION
BLOCK
(8W-12-2)
(8W-12-3)
5
FUSE
4
15A
(8W-12-10)
6
4 C2
34
FUSE
1
30A
(8W-12-7)
33
6 C6
29
FUSE
16
10A
(8W-12-7)
30
4 C4
38
CIRCUIT
BREAKER
NO. 2
30A
(8W-12-7)
37
5 C8
20
FUSE
11
10A
(8W-12-18)
19
10 C7

8W-12 JUNCTION BLOCK

Component	Page
A/C-Heater Control	8W-12-14, 18
Airbag Control Module	8W-12-7, 19
Automatic Day/Night Mirror	8W-12-10, 13, 20, 27
Automatic Temperature Control Head	8W-12-11, 12
Autostick Switch	8W-12-18
Back-Up Lamp Switch	8W-12-10
Blower Motor	8W-12-7
Blower Motor Power Module	8W-12-7
Body Control Module	8W-12-9, 12, 14, 15, 16, 18, 19, 20, 21, 26, 27
Brake Fluid Level Switch	8W-12-26, 27
Brake Lamp Switch	8W-12-12, 25
Brake Transmission Shift Interlock Solenoid	8W-12-11
Center High Mounted Stop Lamp	8W-12-25
Circuit Breaker No. 1 (JB)	8W-12-17
Circuit Breaker No. 2 (JB)	8W-12-7
Compass/Mini-Trip Computer	8W-12-11, 12
Controller Antilock Brake	8W-12-10, 25
Data Link Connector	8W-12-12, 18, 20
Daytime Running Lamp Module	8W-12-9, 10, 16, 17, 20, 26, 27
Dome Lamp	8W-12-12, 13, 26
Driver Cylinder Lock Switch	8W-12-12
Driver Door Lock Switch	8W-12-12
Front Wiper High/Low Relay	8W-12-14
Fuse 1	8W-12-7
Fuse 2	8W-12-9
Fuse 3	8W-12-9
Fuse 4	8W-12-10
Fuse 5	8W-12-12
Fuse 6	8W-12-14
Fuse 7	8W-12-15
Fuse 8	8W-12-15
Fuse 9	8W-12-16
Fuse 10	8W-12-17
Fuse 11	8W-12-18
Fuse 12	8W-12-16
Fuse 13	8W-12-16, 25
Fuse 14	8W-12-14
Fuse 15	8W-12-14
Fuse 16	8W-12-7
Fuse 17	8W-12-19
Fuse 23	8W-12-19
G106	8W-12-15
G301	8W-12-20
Headlamp Delay Relay	8W-12-16, 25
Headlamp Leveling Switch	8W-12-20, 21
Heated Seat Switch	8W-12-18
Horn	8W-12-15
Horn Relay	8W-12-15
Instrument Cluster	8W-12-15, 18, 20, 24, 25, 26, 27
Junction Block	8W-12-2, 3, 7, 8, 9, 10, 11, 12, 13, 14, 15, 16, 17, 18, 19, 20, 21, 22, 23, 24, 25, 26, 27
Left Fog Lamp	8W-12-25
Left Headlamp	8W-12-16, 9
Left Lavalier Module	8W-12-9, 16, 21, 24
Left License Lamp	8W-12-22, 23
Left Park/Turn Signal Lamp	8W-12-21, 24
Left Power Mirror	8W-12-14
Left Rear Power Window Switch	8W-12-26
Left Tail/Side Marker Lamp	8W-12-22
Left Tail/Stop Lamp	8W-12-22, 25
Left Tail/Turn Signal Lamp	8W-12-22, 24
Left Turn Lamp	8W-12-24
Left Visor/Vanity Lamps	8W-12-13
License Lamp	8W-12-22
Master Power Window Switch	8W-12-7, 26
Multi-Function Switch	8W-12-8, 9, 14, 15, 16, 17, 21, 24, 25
Overhead Map/Courtesy Lamps	8W-12-13, 26
Park Brake Switch	8W-12-26, 27
Park Lamp Relay	8W-12-15
Passenger Door Lock Switch	8W-12-12
Passenger Power Window Switch	8W-12-7, 26
Power Amplifier	8W-12-15, 20
Power Antenna	8W-12-13
Power Distribution Center	8W-12-19
Power Mirror Switch	8W-12-12, 20
Power Seat Switch	8W-12-17
Power Top Switch	8W-12-10
Powertrain Control Module	8W-12-18
Radio	8W-12-12, 14
Rear Floor Courtesy Lamp	8W-12-13, 26, 27
Rear Window Defogger	8W-12-14
Rear Window Defogger Relay	8W-12-14
Right Fog Lamp	8W-12-25
Right Headlamp	8W-12-9, 16
Right Lavalier Module	8W-12-9, 16, 21, 24
Right License Lamp	8W-12-22, 23
Right Park/Turn Signal Lamp	8W-12-21, 24
Right Power Mirror	8W-12-14
Right Rear Power Window Switch	8W-12-26
Right Tail/Side Marker Lamp	8W-12-22
Right Tail/Stop Lamp	8W-12-22, 25
Right Tail/Turn Signal Lamp	8W-12-22, 24
Right Turn Lamp	8W-12-24
Right Visor/Vanity Lamps	8W-12-13, 20
Seat Belt Control Module	8W-12-14
Sentry Key Immobilizer Module	8W-12-20
Sunroof Control Module	8W-12-7
Transmission Control Module	8W-12-18
Transmission Range Sensor	8W-12-10
Trunk Lamp	8W-12-12, 13
Window Drop Relay Assembly	8W-12-7, 11

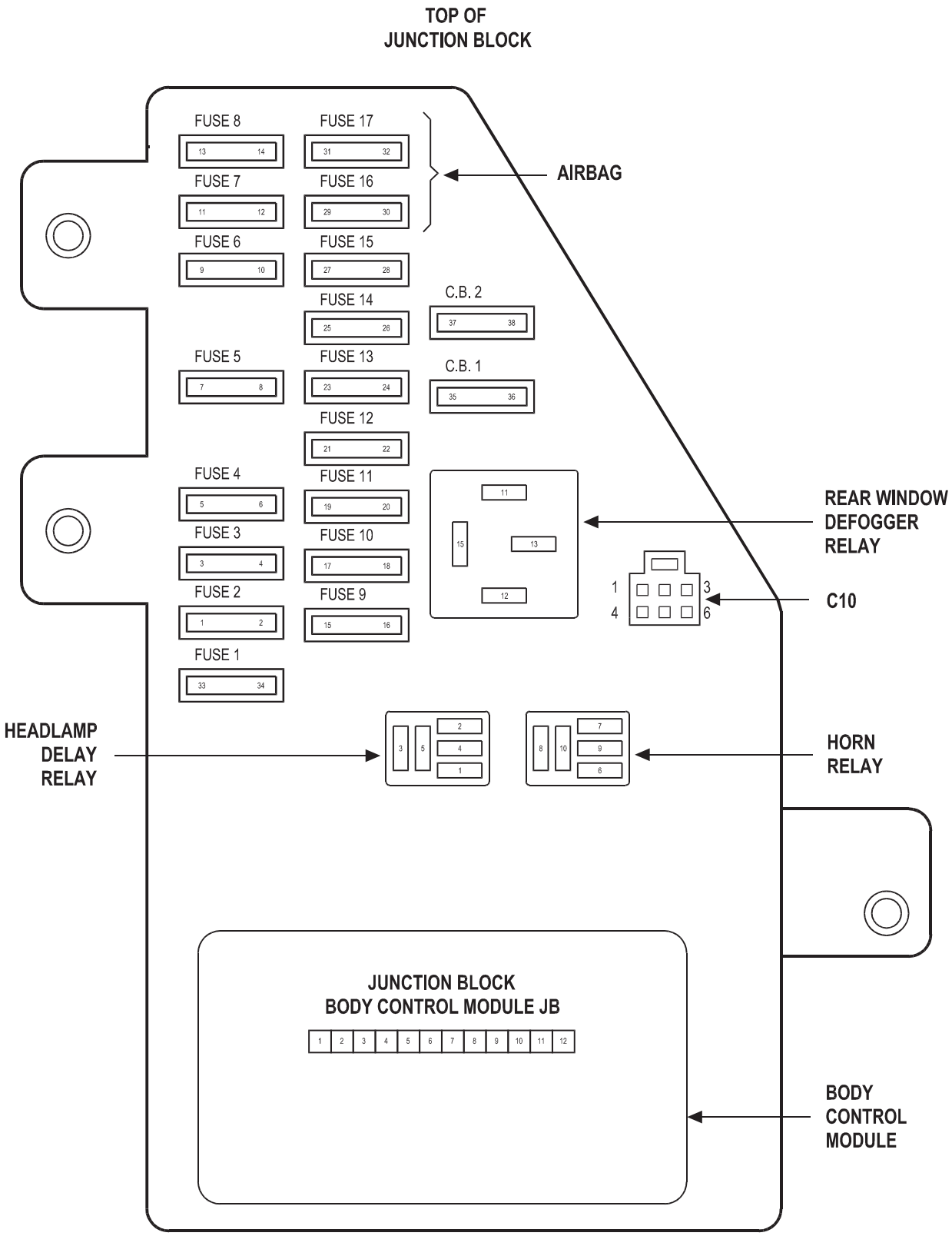
TOP OF
JUNCTION BLOCK
FUSE 8
FUSE 17
FUSE 7
FUSE 16
FUSE 6
FUSE 15
FUSE 14
FUSE 5
FUSE 13
FUSE 12
FUSE 4
FUSE 11
FUSE 3
FUSE 10
FUSE 2
FUSE 9
FUSE 1
C.B. 2
C.B. 1
AIRBAG
REAR WINDOW
DEFOGGER
RELAY
C10
HEADLAMP
DELAY
RELAY
HORN
RELAY
JUNCTION BLOCK
BODY CONTROL MODULE JB
BODY
CONTROL
MODULE

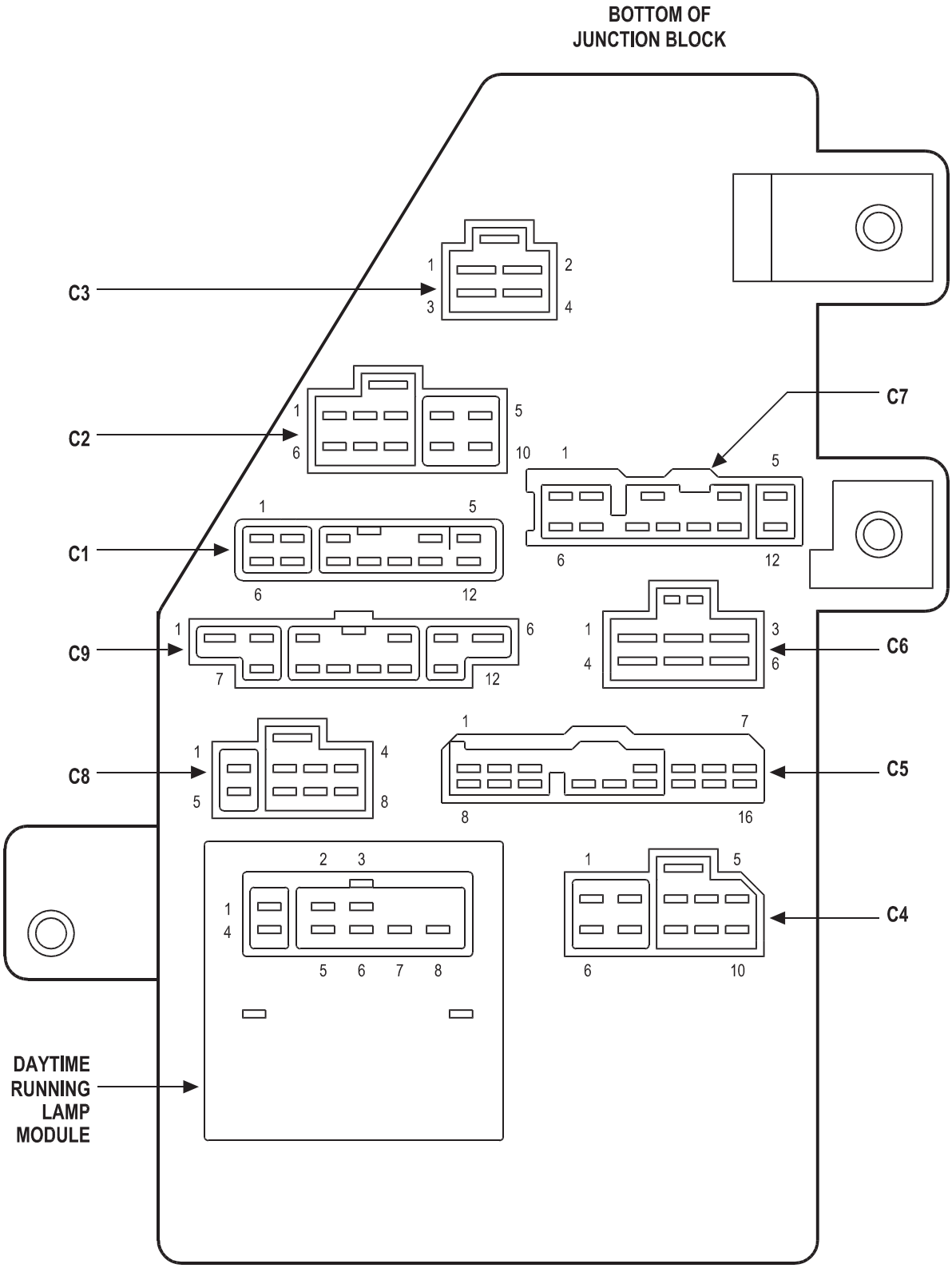
BOTTOM OF
JUNCTION BLOCK
C3
C2
C1
C9
C8
C7
C6
C5
C4
DAYTIME
RUNNING
LAMP
MODULE

FUSES

FUSE NO.	AMPS	FUSED CIRCUIT	FUNCTION
1	30A	C1 14DG	FUSED IGNITION SWITCH OUTPUT (RUN)
2	10A	L34 18RD/OR	FUSED RIGHT HIGH BEAM OUTPUT
3	10A	L33 18LG/BR	FUSED LEFT HIGH BEAM OUTPUT
4	15A	INTERNAL	FUSED IGNITION SWITCH OUTPUT (RUN)
5	10A	INTERNAL	FUSED B(+)
6	10A	INTERNAL	FUSED REAR WINDOW DEFOGGER RELAY OUTPUT
7	20A	INTERNAL	FUSED B(+)
8	20A	INTERNAL	FUSED B(+)
9	15A	INTERNAL	FUSED B(+)
10	20A	L25 20BR ▲▲	FOG LAMP SWITCH FEED
10	20A	INTERNAL ▼	FUSED B(+)
11	10A	INTERNAL	FUSED IGNITION SWITCH OUTPUT (OFF-RUN-START)
12	10A	INTERNAL	FUSED LEFT LOW BEAM OUTPUT
13	20A	INTERNAL	FUSED RIGHT LOW BEAM OUTPUT
14	10A	X12 18RD/WT	FUSED IGNITION SWITCH OUTPUT (RUN-ACC)
15	10A	INTERNAL	FUSED IGNITION SWITCH OUTPUT (RUN-ACC)
16	10A	F23 20DB/YL	FUSED IGNITION SWITCH OUTPUT (RUN)
17	10A	F14 18LG/YL	FUSED IGNITION SWITCH OUTPUT (RUN-START)
		F14 20LG/YL	FUSED IGNITION SWITCH OUTPUT (RUN-START)

▼ FLEET/CANADA
▲▲ EXPORT

CIRCUIT BREAKERS

C.B. NO.	AMPS	FUSED CIRCUIT	FUNCTION
1	20A	F35 16RD	FUSED B(+)
2	30A	F21 14TN □	FUSED IGNITION SWITCH OUTPUT (RUN)
2	30A	INTERNAL □□	FUSED IGNITION SWITCH OUTPUT (RUN)

JUNCTION BLOCK
BODY CONTROL MODULE-JB

CAV	CIRCUIT	FUNCTION
1	L3 14RD/OR	DIMMER SWITCH HIGH BEAM OUTPUT
2	INTERNAL	FUSED B(+)
3	INTERNAL	REAR WINDOW DEFOGGER RELAY CONTROL
4	INTERNAL	HEADLAMP DELAY RELAY OUTPUT
5	INTERNAL	HEADLAMP DELAY RELAY CONTROL
6	INTERNAL	FUSED IGNITION SWITCH OUTPUT (OFF-RUN-START)
7	INTERNAL	HORN RELAY CONTROL
8	INTERNAL	HEADLAMP SWITCH OUTPUT
9	M2 18YL □	COURTESY LAMPS DRIVER
9	M2 18YL □	COURTESY LAMPS DRIVER
9	M2 20YL □□	COURTESY LAMPS DRIVER
9	M2 20YL □□	COURTESY LAMPS DRIVER
10	INTERNAL	GROUND
11	INTERNAL	FUSED IGNITION SWITCH OUTPUT (RUN-START)
12	INTERNAL	FUSED B(+)

□ JR27
□□ JR41

DAYTIME RUNNING LAMP MODULE

CAVITY	CIRCUIT	FUNCTION
1	INTERNAL	FUSED LEFT LOW BEAM OUTPUT
2	INTERNAL	FUSED B(+)
3	-	-
4	INTERNAL	FUSED RIGHT HIGH BEAM OUTPUT
5	INTERNAL	FUSED IGNITION SWITCH OUTPUT (RUN)
6	INTERNAL	BRAKE WARNING INDICATOR DRIVER
7	-	-
8	INTERNAL	GROUND

HEADLAMP DELAY RELAY

CAVITY	CIRCUIT	FUNCTION
1	INTERNAL	FUSED B(+)
2	INTERNAL	HEADLAMP DELAY RELAY CONTROL
3	INTERNAL	FUSED B(+)
4	-	-
5	INTERNAL	HEADLAMP DELAY RELAY OUTPUT

HORN RELAY

CAVITY	CIRCUIT	FUNCTION
6	INTERNAL	FUSED B(+)
7	INTERNAL	HORN RELAY CONTROL
8	INTERNAL	FUSED B(+)
9	-	-
10	X2 18DG/RD	HORN RELAY OUTPUT

REAR WINDOW DEFOGGER RELAY

CAVITY	CIRCUIT	FUNCTION
11	INTERNAL	REAR WINDOW DEFOGGER RELAY CONTROL
12	INTERNAL	FUSED IGNITION SWITCH OUTPUT (RUN-ACC)
13	INTERNAL	FUSED B(+)
15	INTERNAL	REAR WINDOW DEFOGGER RELAY OUTPUT

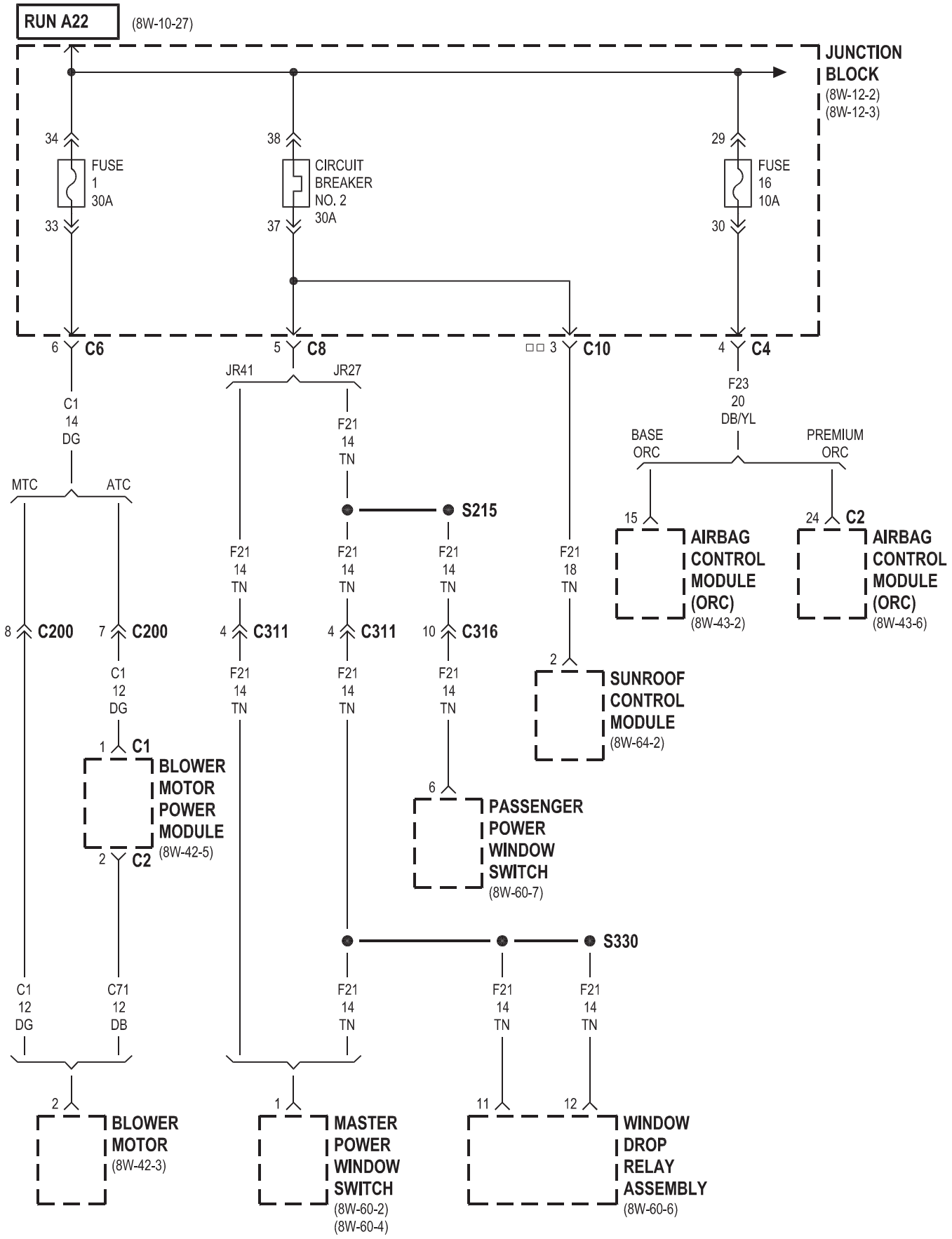
RUN A22
(8W-10-27)
JUNCTION BLOCK
(8W-12-2)
(8W-12-3)
34
FUSE 1 30A
33
38
CIRCUIT BREAKER NO. 2 30A
37
29
FUSE 16 10A
30
6 C6
5 C8
3 C10
4 C4
C1 14 DG
JR41
JR27
F21 14 TN
F23 20 DB/YL
BASE ORC
PREMIUM ORC
MTC
ATC
S215
15
AIRBAG CONTROL MODULE (ORC)
(8W-43-2)
24 C2
AIRBAG CONTROL MODULE (ORC)
(8W-43-6)
F21 14 TN
F21 14 TN
F21 14 TN
F21 18 TN
8 C200
7 C200
4 C311
4 C311
10 C316
2
SUNROOF CONTROL MODULE
(8W-64-2)
C1 12 DG
1 C1
BLOWER MOTOR POWER MODULE
(8W-42-5)
2 C2
6
PASSENGER POWER WINDOW SWITCH
(8W-60-7)
S330
C1 12 DG
C71 12 DB
F21 14 TN
F21 14 TN
F21 14 TN
2
BLOWER MOTOR
(8W-42-3)
1
MASTER POWER WINDOW SWITCH
(8W-60-2)
(8W-60-4)
11
12
WINDOW DROP RELAY ASSEMBLY
(8W-60-6)
JR41

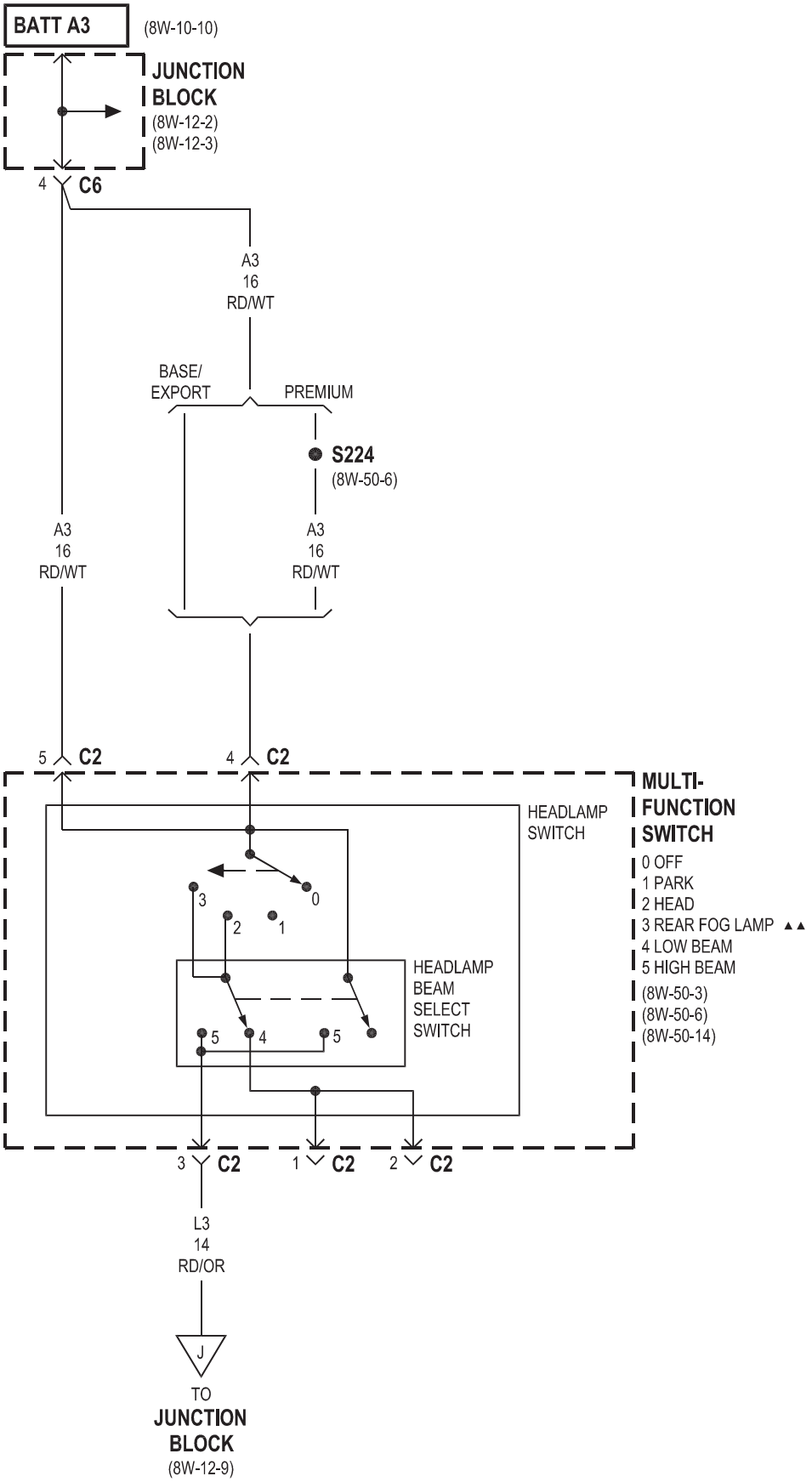
BATT A3
(8W-10-10)
JUNCTION BLOCK
(8W-12-2)
(8W-12-3)
4
C6
A3
16
RD/WT
BASE/ EXPORT
PREMIUM
S224
(8W-50-6)
A3
16
RD/WT
A3
16
RD/WT
5
C2
4
C2
MULTI-FUNCTION SWITCH
HEADLAMP SWITCH
0 OFF
1 PARK
2 HEAD
3 REAR FOG LAMP ▲▲
4 LOW BEAM
5 HIGH BEAM
(8W-50-3)
(8W-50-6)
(8W-50-14)
HEADLAMP BEAM SELECT SWITCH
3
C2
1
C2
2
C2
L3
14
RD/OR
J
TO
JUNCTION BLOCK
(8W-12-9)

▲▲ EXPORT

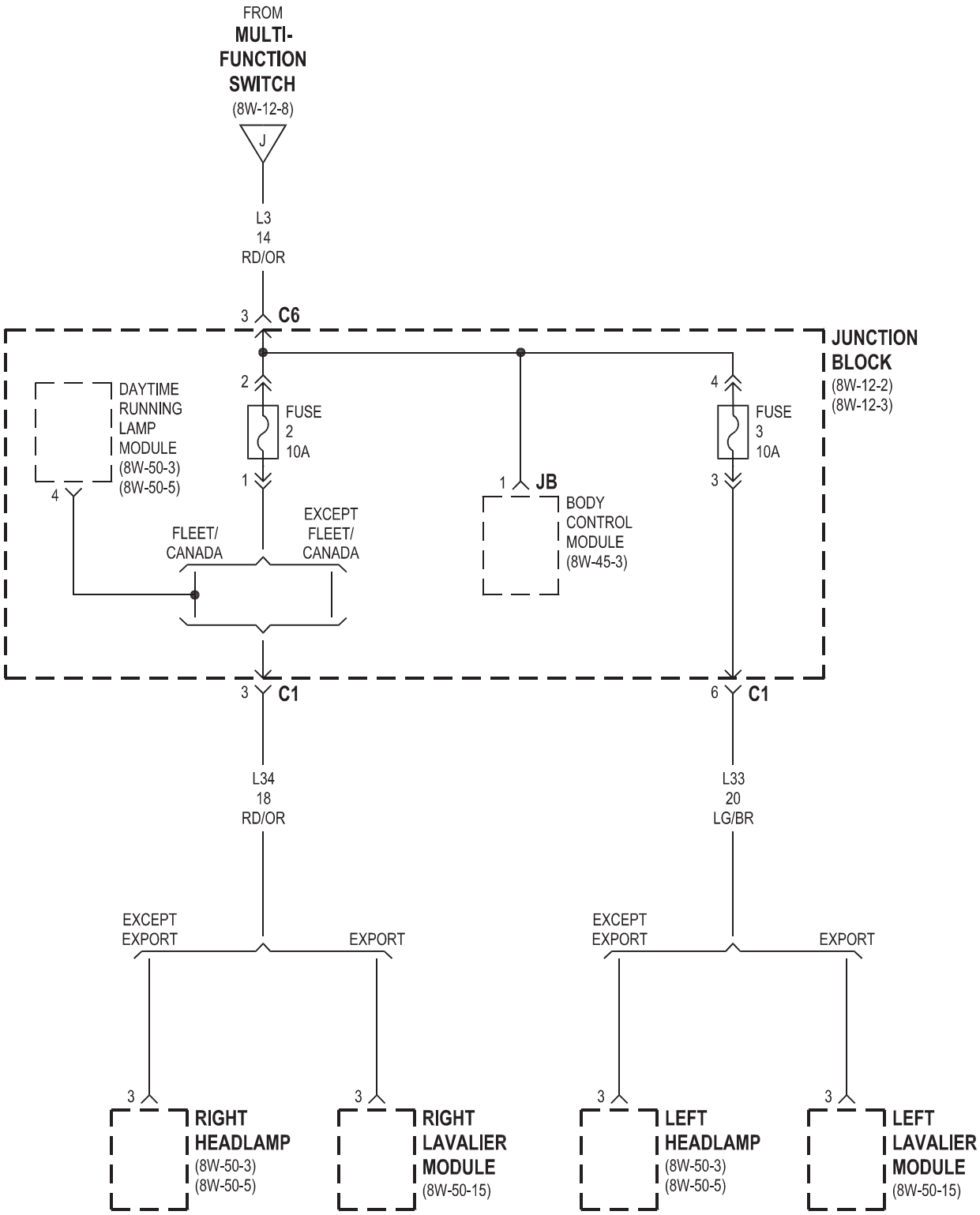
FROM
MULTI-
FUNCTION
SWITCH
(8W-12-8)
J
L3
14
RD/OR
3
C6
JUNCTION
BLOCK
(8W-12-2)
(8W-12-3)
2
DAYTIME
RUNNING
LAMP
MODULE
(8W-50-3)
(8W-50-5)
FUSE
2
10A
1
4
FUSE
3
10A
4
3
1
JB
BODY
CONTROL
MODULE
(8W-45-3)
FLEET/
CANADA
EXCEPT
FLEET/
CANADA
3
C1
6
C1
L34
18
RD/OR
L33
20
LG/BR
EXCEPT
EXPORT
EXPORT
EXCEPT
EXPORT
EXPORT
3
RIGHT
HEADLAMP
(8W-50-3)
(8W-50-5)
3
RIGHT
LAVALIER
MODULE
(8W-50-15)
3
LEFT
HEADLAMP
(8W-50-3)
(8W-50-5)
3
LEFT
LAVALIER
MODULE
(8W-50-15)

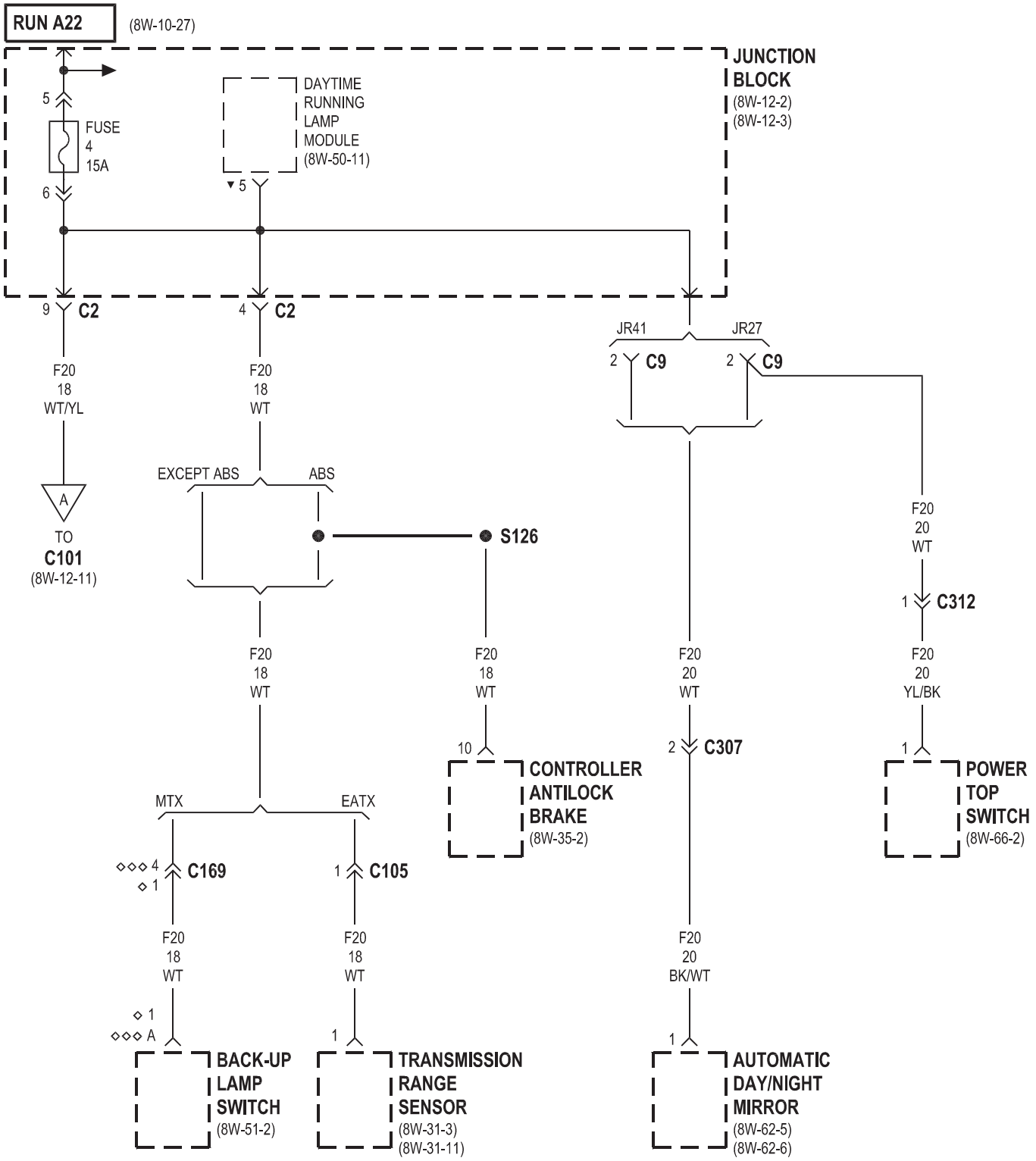

◇ 2.7L
◇◇◇ 2.0L
□ JR27
▼ FLEET/CANADA

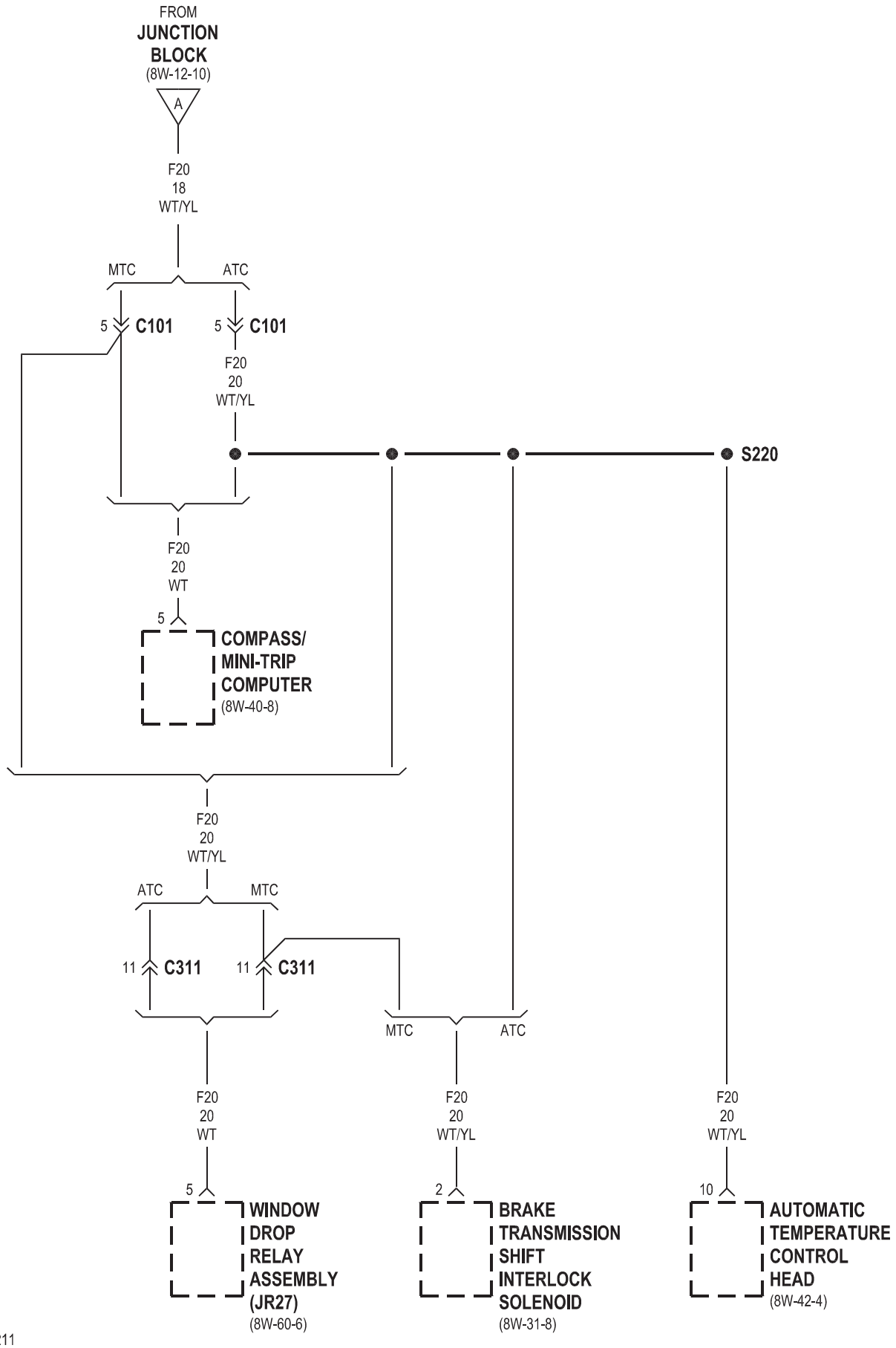
FROM
JUNCTION
BLOCK
(8W-12-10)
A
F20
18
WT/YL
MTC
ATC
5
C101
5
C101
F20
20
WT/YL
S220
F20
20
WT
5
COMPASS/
MINI-TRIP
COMPUTER
(8W-40-8)
F20
20
WT/YL
ATC
MTC
11
C311
11
C311
MTC
ATC
F20
20
WT
F20
20
WT/YL
F20
20
WT/YL
5
WINDOW
DROP
RELAY
ASSEMBLY
(JR27)
(8W-60-6)
2
BRAKE
TRANSMISSION
SHIFT
INTERLOCK
SOLENOID
(8W-31-8)
10
AUTOMATIC
TEMPERATURE
CONTROL
HEAD
(8W-42-4)

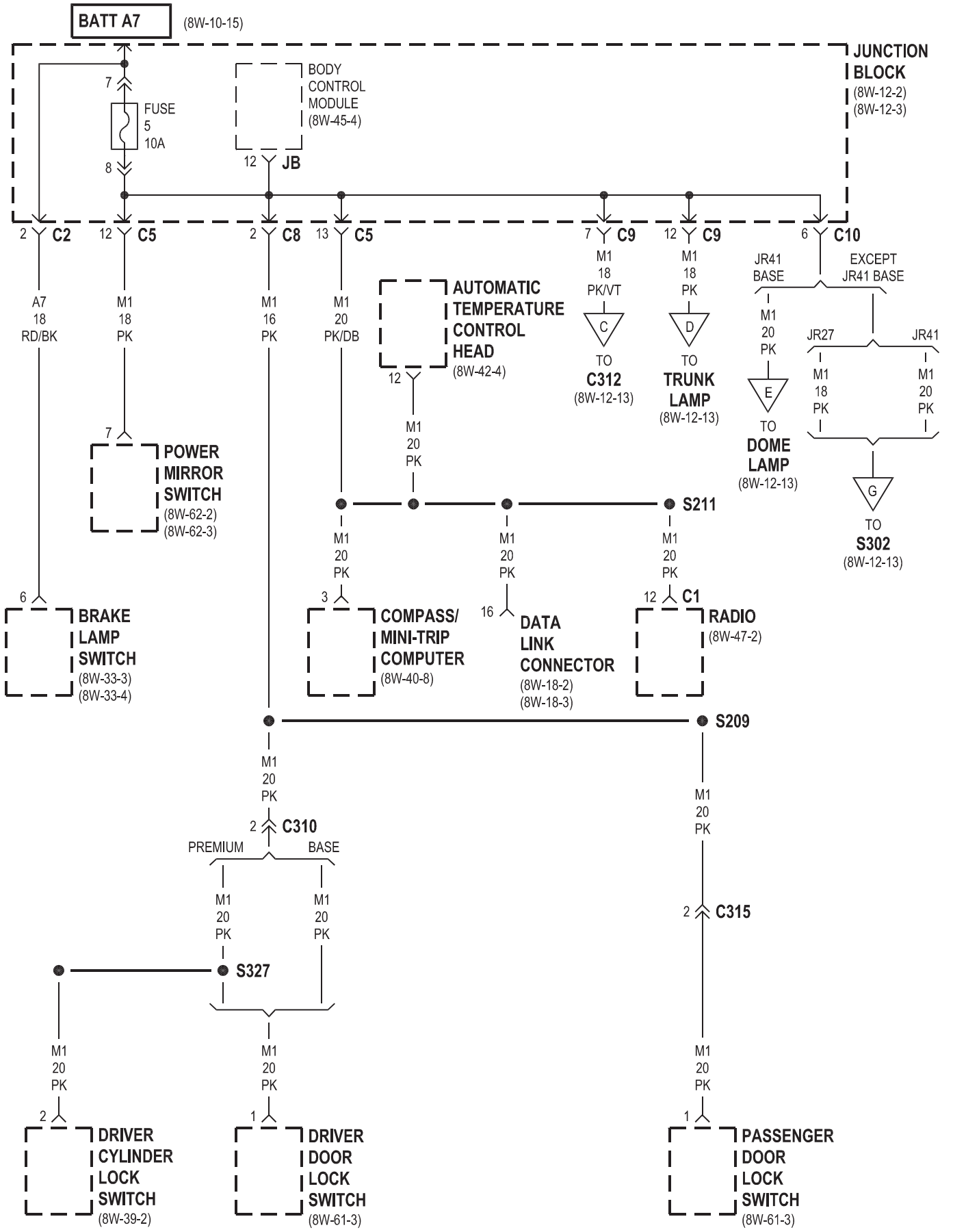
BATT A7
(8W-10-15)
JUNCTION BLOCK
(8W-12-2)
(8W-12-3)
FUSE 5 10A
BODY CONTROL MODULE
(8W-45-4)
JB
C2
C5
C8
C5
C9
C9
C10
A7 18 RD/BK
M1 18 PK
M1 16 PK
M1 20 PK/DB
AUTOMATIC TEMPERATURE CONTROL HEAD
(8W-42-4)
M1 18 PK/VT
TO C312
(8W-12-13)
M1 18 PK
TO TRUNK LAMP
(8W-12-13)
JR41 BASE
EXCEPT JR41 BASE
M1 20 PK
TO DOME LAMP
(8W-12-13)
JR27
JR41
M1 18 PK
M1 20 PK
TO S302
(8W-12-13)
POWER MIRROR SWITCH
(8W-62-2)
(8W-62-3)
M1 20 PK
S211
M1 20 PK
M1 20 PK
M1 20 PK
BRAKE LAMP SWITCH
(8W-33-3)
(8W-33-4)
COMPASS/ MINI-TRIP COMPUTER
(8W-40-8)
DATA LINK CONNECTOR
(8W-18-2)
(8W-18-3)
C1
RADIO
(8W-47-2)
S209
M1 20 PK
C310
PREMIUM
BASE
M1 20 PK
M1 20 PK
S327
M1 20 PK
C315
M1 20 PK
M1 20 PK
M1 20 PK
DRIVER CYLINDER LOCK SWITCH
(8W-39-2)
DRIVER DOOR LOCK SWITCH
(8W-61-3)
PASSENGER DOOR LOCK SWITCH
(8W-61-3)

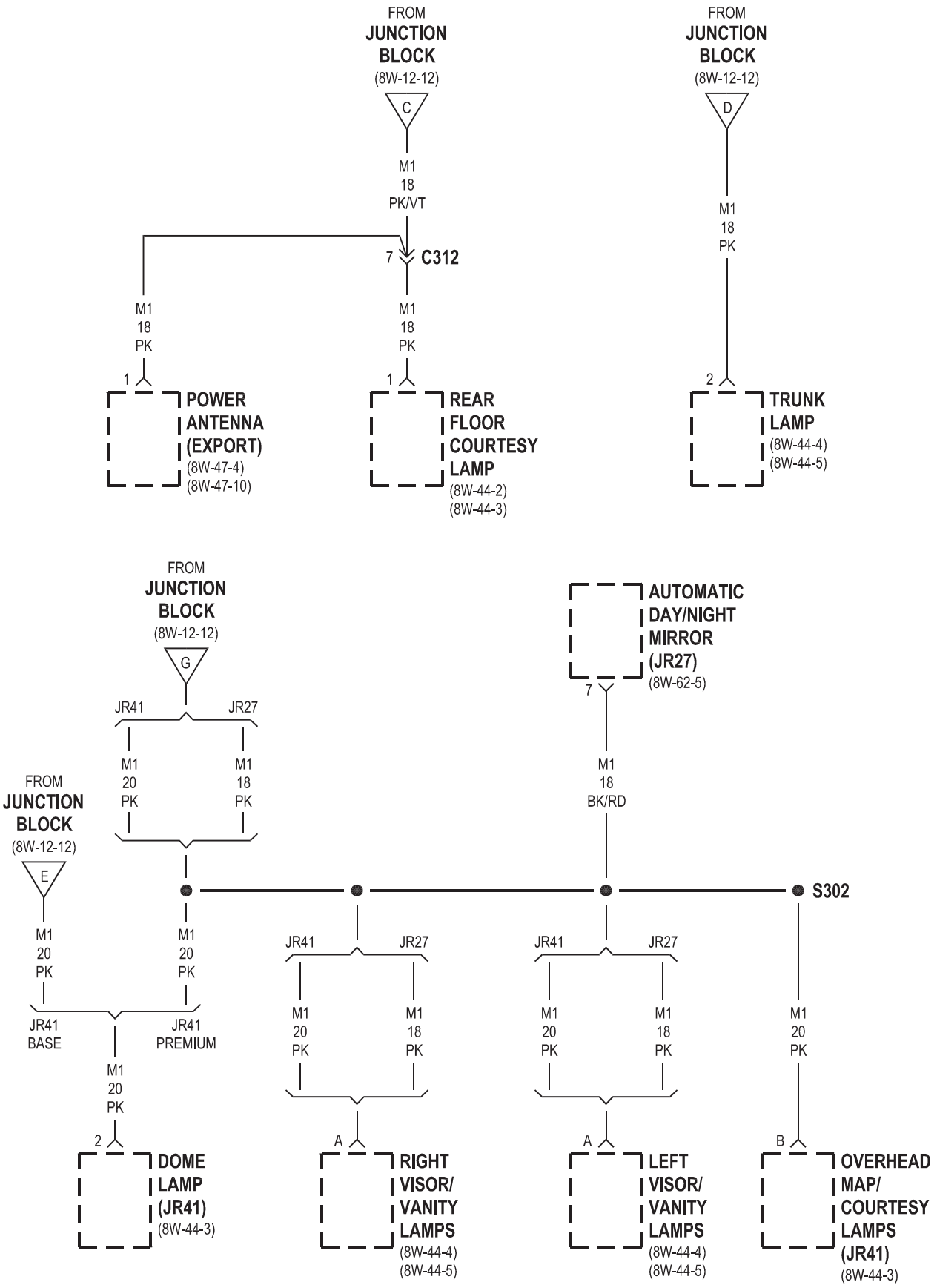
FROM
JUNCTION
BLOCK
(8W-12-12)
C
M1
18
PK/VT
7
C312
M1
18
PK
1
POWER
ANTENNA
(EXPORT)
(8W-47-4)
(8W-47-10)
M1
18
PK
1
REAR
FLOOR
COURTESY
LAMP
(8W-44-2)
(8W-44-3)
FROM
JUNCTION
BLOCK
(8W-12-12)
D
M1
18
PK
2
TRUNK
LAMP
(8W-44-4)
(8W-44-5)
FROM
JUNCTION
BLOCK
(8W-12-12)
G
JR41
JR27
M1
20
PK
M1
18
PK
AUTOMATIC
DAY/NIGHT
MIRROR
(JR27)
(8W-62-5)
7
M1
18
BK/RD
FROM
JUNCTION
BLOCK
(8W-12-12)
E
S302
M1
20
PK
M1
20
PK
JR41
BASE
JR41
PREMIUM
M1
20
PK
2
DOME
LAMP
(JR41)
(8W-44-3)
JR41
JR27
M1
20
PK
M1
18
PK
A
RIGHT
VISOR/
VANITY
LAMPS
(8W-44-4)
(8W-44-5)
JR41
JR27
M1
20
PK
M1
18
PK
A
LEFT
VISOR/
VANITY
LAMPS
(8W-44-4)
(8W-44-5)
M1
20
PK
B
OVERHEAD
MAP/
COURTESY
LAMPS
(JR41)
(8W-44-3)

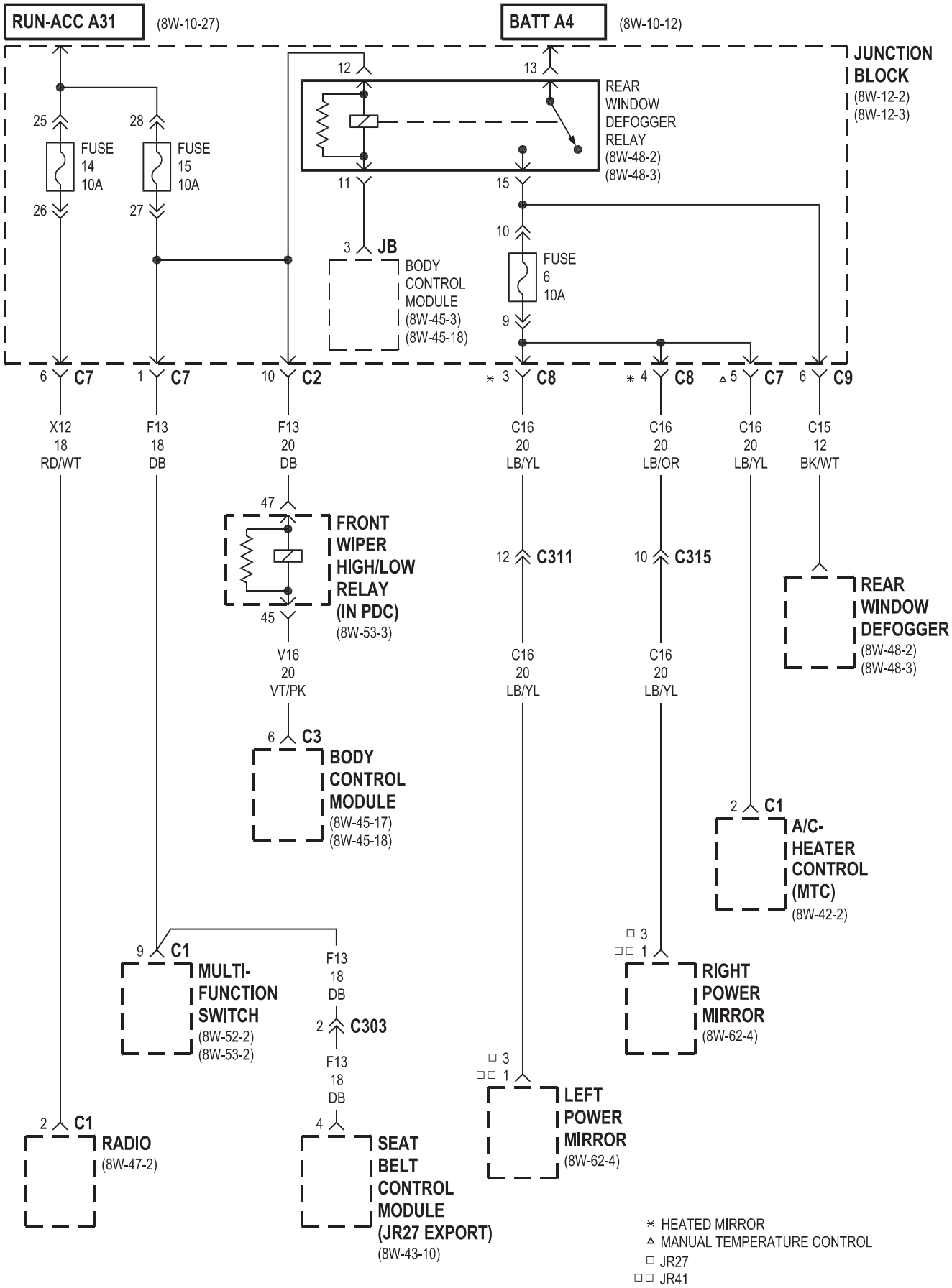
RUN-ACC A31
(8W-10-27)
BATT A4
(8W-10-12)
JUNCTION BLOCK
(8W-12-2)
(8W-12-3)
REAR WINDOW DEFOGGER RELAY
(8W-48-2)
(8W-48-3)
FUSE 14 10A
FUSE 15 10A
FUSE 6 10A
JB
BODY CONTROL MODULE
(8W-45-3)
(8W-45-18)
C7
C2
C8
C9
X12 18 RD/WT
F13 18 DB
F13 20 DB
C16 20 LB/YL
C16 20 LB/OR
C15 12 BK/WT
FRONT WIPER HIGH/LOW RELAY (IN PDC)
(8W-53-3)
V16 20 VT/PK
C311
C315
REAR WINDOW DEFOGGER
(8W-48-2)
(8W-48-3)
C3
BODY CONTROL MODULE
(8W-45-17)
(8W-45-18)
C1
A/C-HEATER CONTROL (MTC)
(8W-42-2)
MULTI-FUNCTION SWITCH
(8W-52-2)
(8W-53-2)
C303
RIGHT POWER MIRROR
(8W-62-4)
LEFT POWER MIRROR
(8W-62-4)
RADIO
(8W-47-2)
SEAT BELT CONTROL MODULE (JR27 EXPORT)
(8W-43-10)
HEATED MIRROR
MANUAL TEMPERATURE CONTROL
JR27
JR41

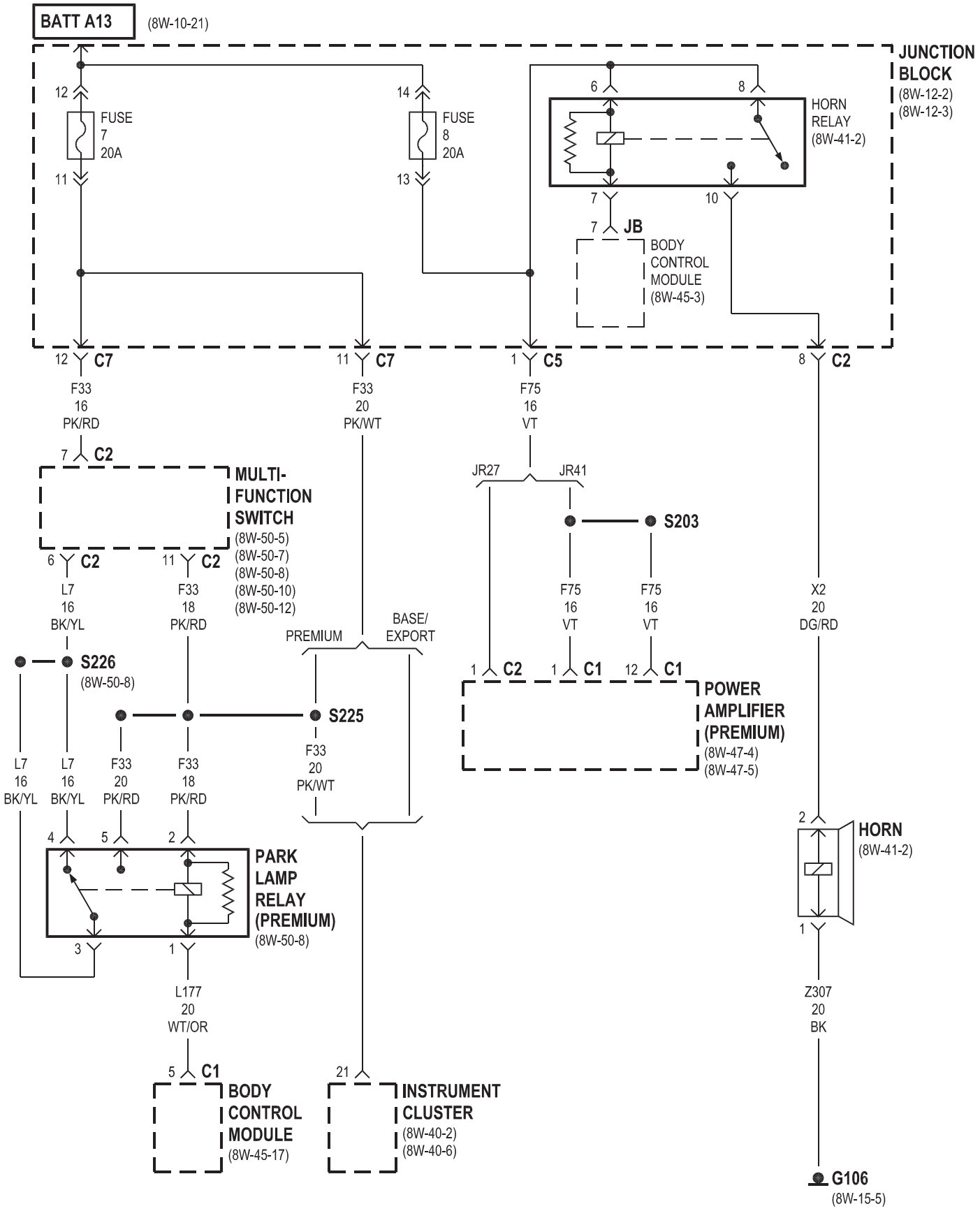
BATT A13
(8W-10-21)
JUNCTION BLOCK
(8W-12-2)
(8W-12-3)
FUSE 7 20A
FUSE 8 20A
HORN RELAY
(8W-41-2)
JB
BODY CONTROL MODULE
(8W-45-3)
C7
C5
C2
F33 16 PK/RD
F33 20 PK/WT
F75 16 VT
MULTI-FUNCTION SWITCH
(8W-50-5)
(8W-50-7)
(8W-50-8)
(8W-50-10)
(8W-50-12)
L7 16 BK/YL
F33 18 PK/RD
S226
(8W-50-8)
PREMIUM
BASE/ EXPORT
S225
F33 20 PK/WT
JR27
JR41
S203
F75 16 VT
C1
POWER AMPLIFIER (PREMIUM)
(8W-47-4)
(8W-47-5)
X2 20 DG/RD
HORN
(8W-41-2)
Z307 20 BK
G106
(8W-15-5)
PARK LAMP RELAY (PREMIUM)
(8W-50-8)
L177 20 WT/OR
BODY CONTROL MODULE
(8W-45-17)
INSTRUMENT CLUSTER
(8W-40-2)
(8W-40-6)

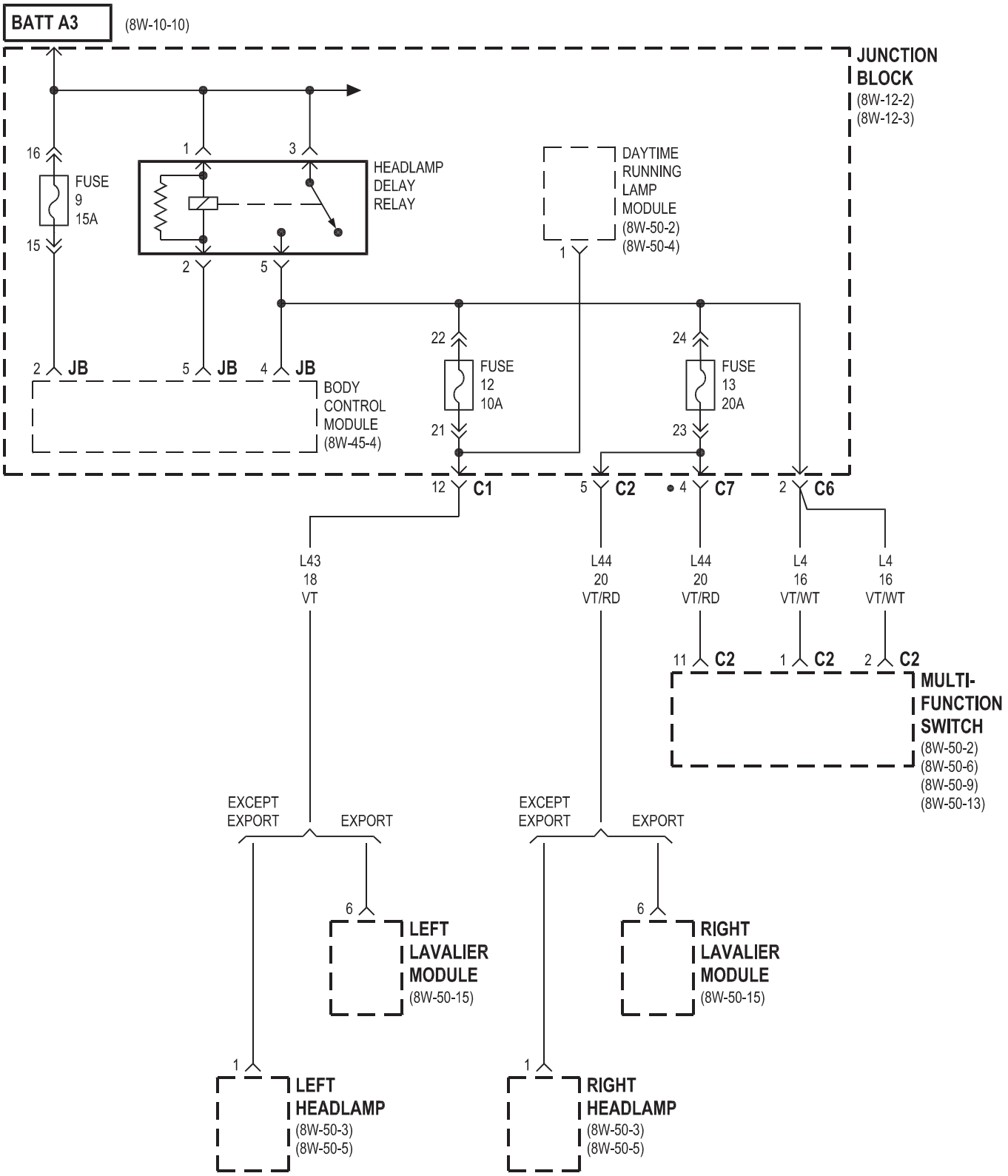
BATT A3
(8W-10-10)
JUNCTION BLOCK
(8W-12-2)
(8W-12-3)
16
FUSE 9 15A
15
1
3
HEADLAMP DELAY RELAY
2
5
DAYTIME RUNNING LAMP MODULE
(8W-50-2)
(8W-50-4)
1
22
24
2 JB
5 JB
4 JB
BODY CONTROL MODULE
(8W-45-4)
FUSE 12 10A
21
FUSE 13 20A
23
12 C1
5 C2
4 C7
2 C6
L43 18 VT
L44 20 VT/RD
L44 20 VT/RD
L4 16 VT/WT
L4 16 VT/WT
11 C2
1 C2
2 C2
MULTI-FUNCTION SWITCH
(8W-50-2)
(8W-50-6)
(8W-50-9)
(8W-50-13)
EXCEPT EXPORT
EXPORT
EXCEPT EXPORT
EXPORT
6
LEFT LAVALIER MODULE
(8W-50-15)
6
RIGHT LAVALIER MODULE
(8W-50-15)
1
LEFT HEADLAMP
(8W-50-3)
(8W-50-5)
1
RIGHT HEADLAMP
(8W-50-3)
(8W-50-5)

● BASE

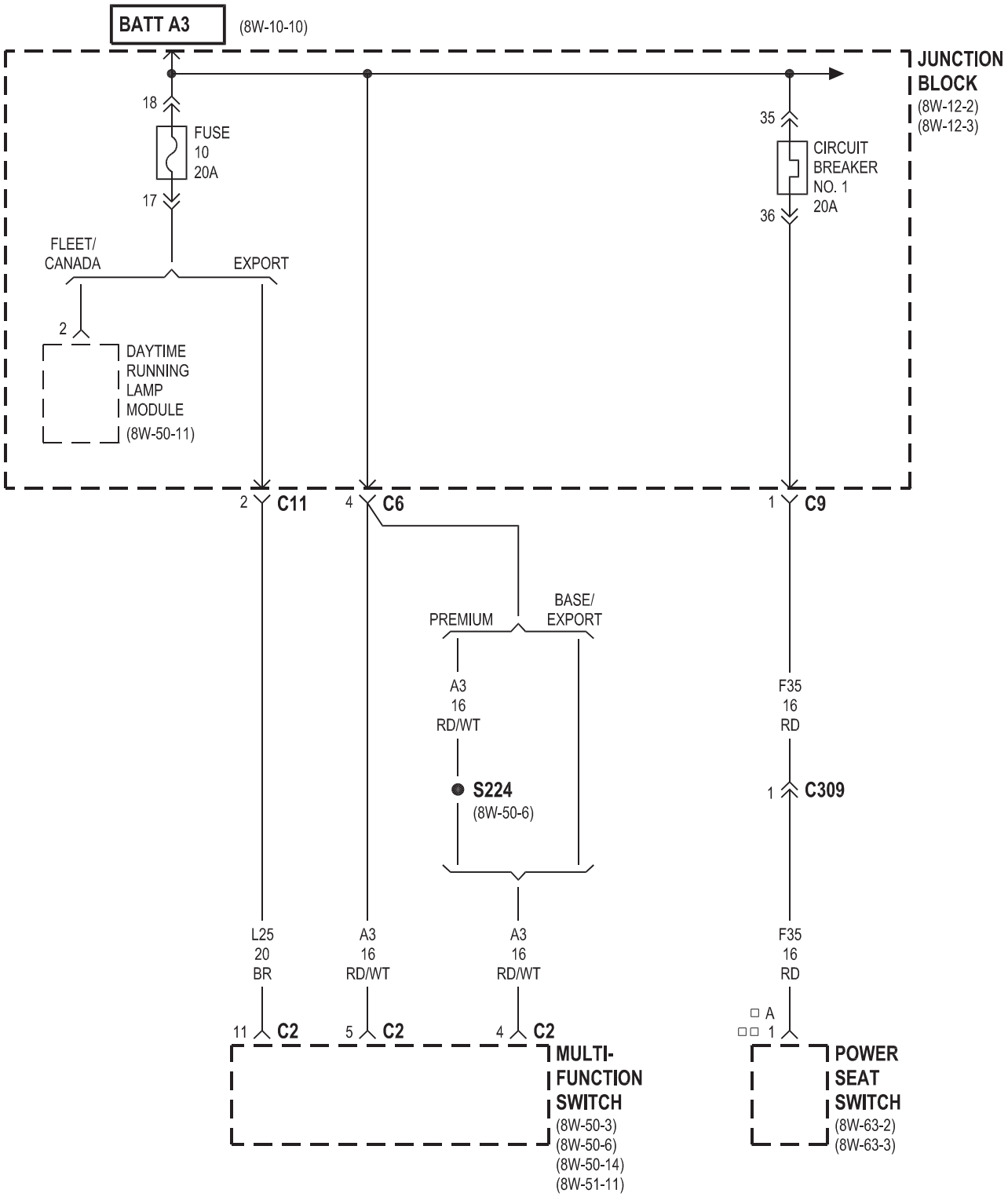
BATT A3
(8W-10-10)
JUNCTION BLOCK
(8W-12-2)
(8W-12-3)
18
FUSE
10
20A
17
35
CIRCUIT BREAKER NO. 1
20A
36
FLEET/ CANADA
EXPORT
2
DAYTIME RUNNING LAMP MODULE
(8W-50-11)
2 C11
4 C6
1 C9
PREMIUM
BASE/ EXPORT
A3
16
RD/WT
S224
(8W-50-6)
F35
16
RD
1 C309
L25
20
BR
A3
16
RD/WT
A3
16
RD/WT
F35
16
RD
11 C2
5 C2
4 C2
A
1
MULTI-FUNCTION SWITCH
(8W-50-3)
(8W-50-6)
(8W-50-14)
(8W-51-11)
POWER SEAT SWITCH
(8W-63-2)
(8W-63-3)

JR27
JR41

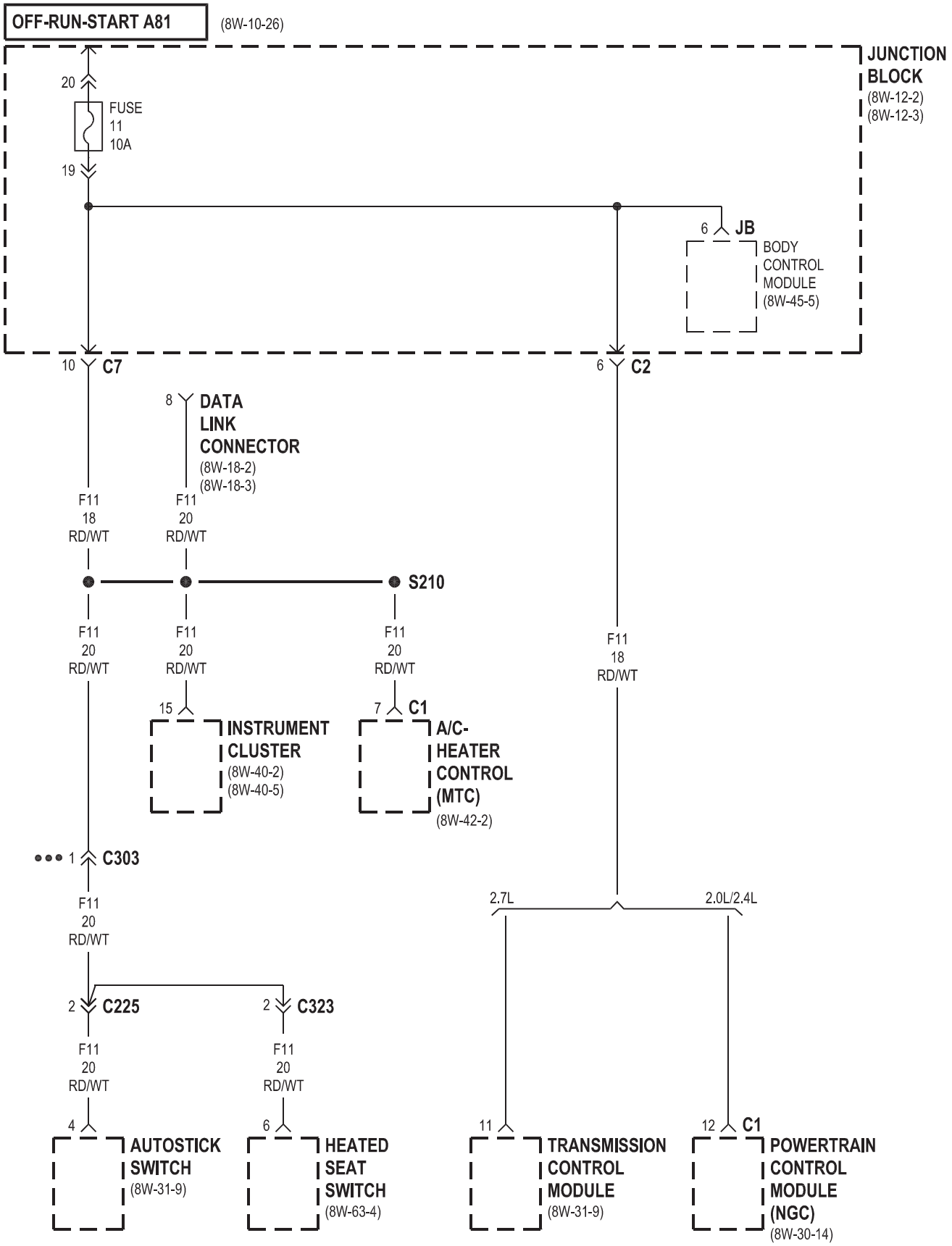
OFF-RUN-START A81
(8W-10-26)
JUNCTION BLOCK
(8W-12-2)
(8W-12-3)
20
FUSE 11 10A
19
6 JB
BODY CONTROL MODULE
(8W-45-5)
10 C7
6 C2
8 DATA LINK CONNECTOR
(8W-18-2)
(8W-18-3)
F11 18 RD/WT
F11 20 RD/WT
S210
F11 20 RD/WT
F11 20 RD/WT
F11 20 RD/WT
F11 18 RD/WT
15 INSTRUMENT CLUSTER
(8W-40-2)
(8W-40-5)
7 C1
A/C-HEATER CONTROL (MTC)
(8W-42-2)
1 C303
F11 20 RD/WT
2.7L
2.0L/2.4L
2 C225
2 C323
F11 20 RD/WT
F11 20 RD/WT
4 AUTOSTICK SWITCH
(8W-31-9)
6 HEATED SEAT SWITCH
(8W-63-4)
11 TRANSMISSION CONTROL MODULE
(8W-31-9)
12 C1
POWERTRAIN CONTROL MODULE (NGC)
(8W-30-14)

● ● ● EXCEPT BASE

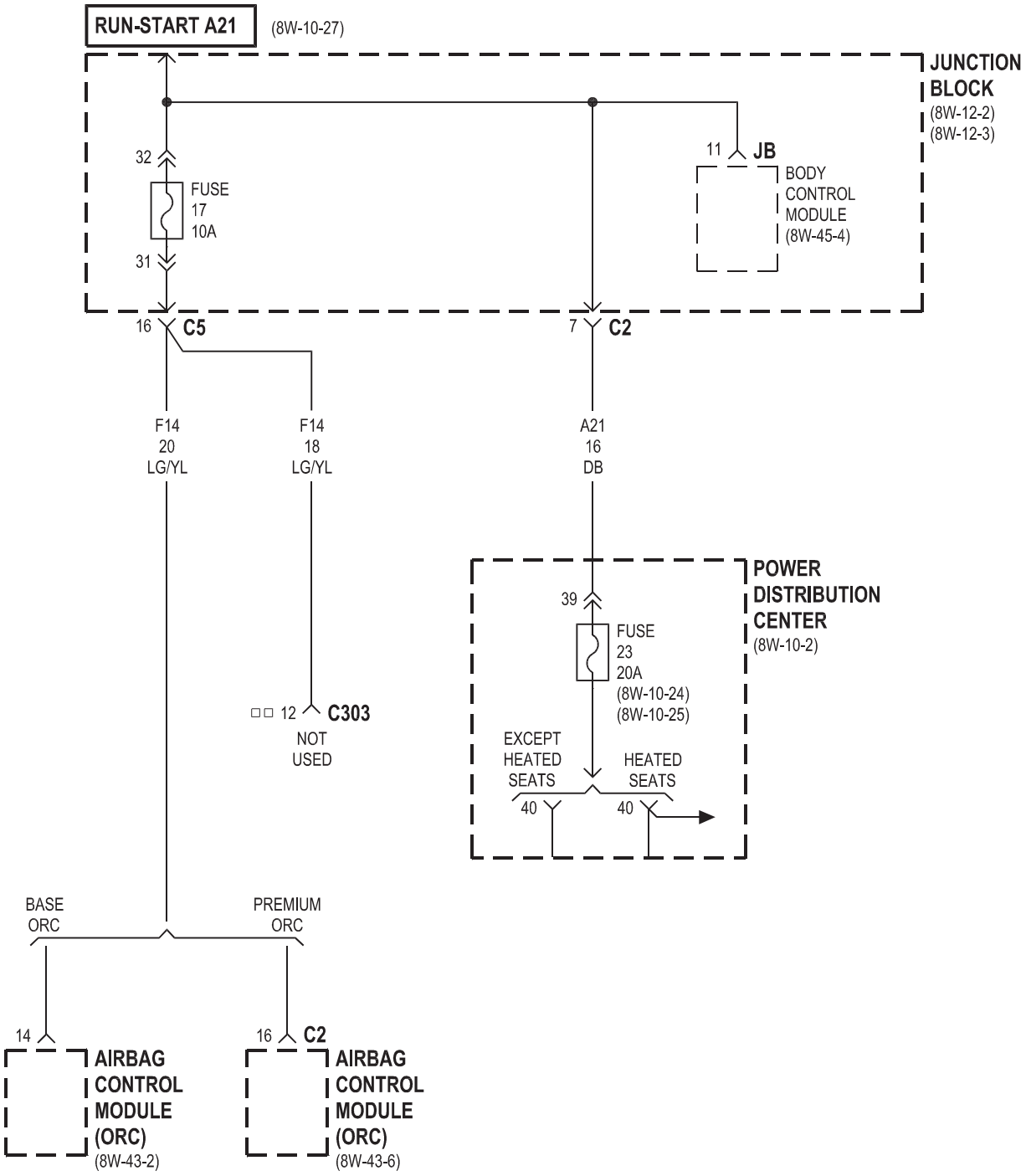
RUN-START A21
(8W-10-27)
JUNCTION BLOCK
(8W-12-2)
(8W-12-3)
32
FUSE
17
10A
31
11
JB
BODY CONTROL MODULE
(8W-45-4)
16
C5
7
C2
F14
20
LG/YL
F14
18
LG/YL
A21
16
DB
POWER DISTRIBUTION CENTER
(8W-10-2)
39
FUSE
23
20A
(8W-10-24)
(8W-10-25)
12
C303
NOT USED
EXCEPT HEATED SEATS
HEATED SEATS
40
40
BASE ORC
PREMIUM ORC
14
16
C2
AIRBAG CONTROL MODULE (ORC)
(8W-43-2)
AIRBAG CONTROL MODULE (ORC)
(8W-43-6)

JR41

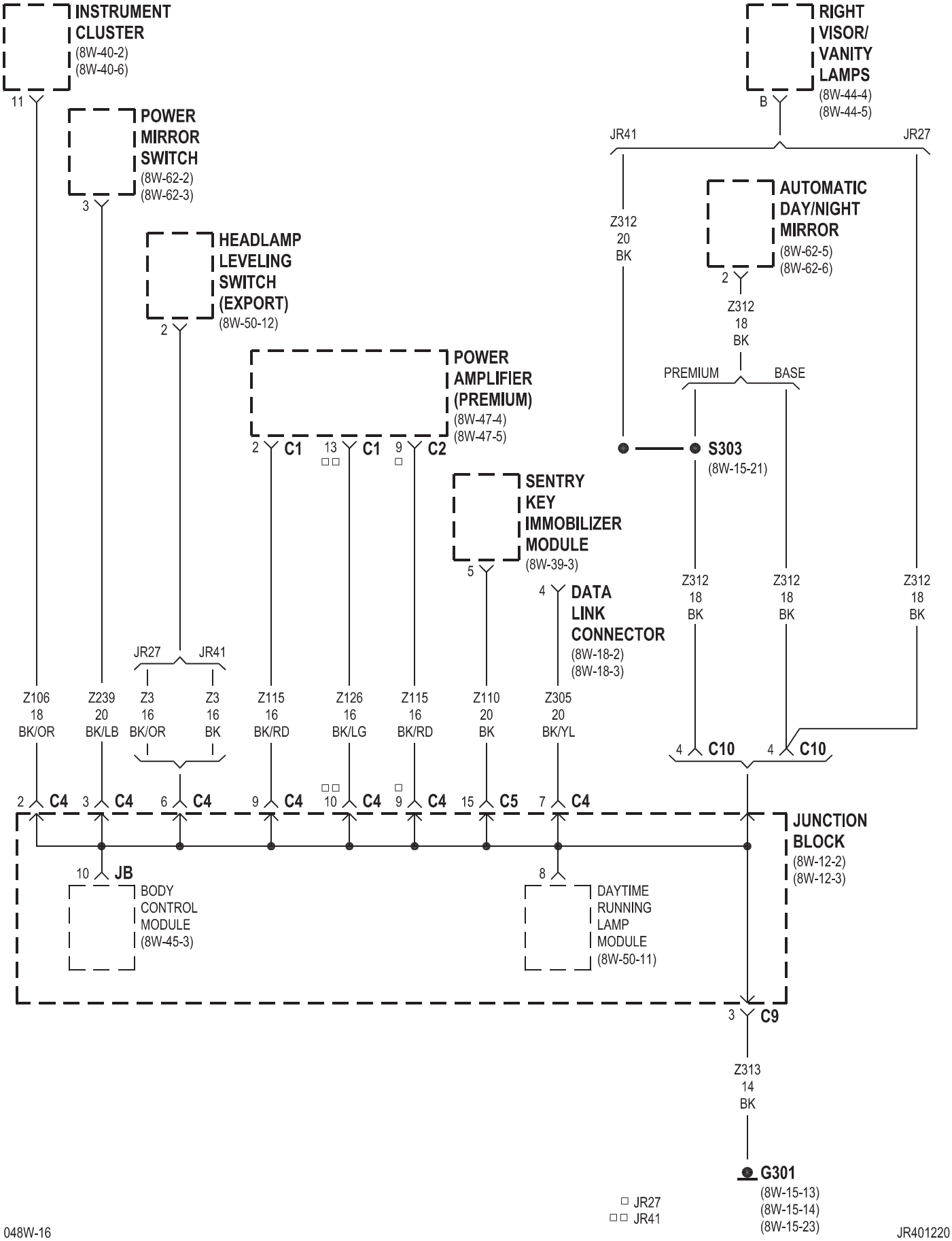
INSTRUMENT CLUSTER
(8W-40-2)
(8W-40-6)
11
POWER MIRROR SWITCH
(8W-62-2)
(8W-62-3)
3
HEADLAMP LEVELING SWITCH (EXPORT)
(8W-50-12)
2
POWER AMPLIFIER (PREMIUM)
(8W-47-4)
(8W-47-5)
2 C1
13 C1
9 C2
SENTRY KEY IMMOBILIZER MODULE
(8W-39-3)
5
4 DATA LINK CONNECTOR
(8W-18-2)
(8W-18-3)
RIGHT VISOR/ VANITY LAMPS
(8W-44-4)
(8W-44-5)
B
JR41
JR27
Z312 20 BK
AUTOMATIC DAY/NIGHT MIRROR
(8W-62-5)
(8W-62-6)
2
Z312 18 BK
PREMIUM
BASE
S303
(8W-15-21)
Z312 18 BK
Z312 18 BK
Z312 18 BK
JR27
JR41
Z106 18 BK/OR
Z239 20 BK/LB
Z3 16 BK/OR
Z3 16 BK
Z115 16 BK/RD
Z126 16 BK/LG
Z115 16 BK/RD
Z110 20 BK
Z305 20 BK/YL
4 C10
4 C10
2 C4
3 C4
6 C4
9 C4
10 C4
9 C4
15 C5
7 C4
JUNCTION BLOCK
(8W-12-2)
(8W-12-3)
10 JB
BODY CONTROL MODULE
(8W-45-3)
8
DAYTIME RUNNING LAMP MODULE
(8W-50-11)
3 C9
Z313 14 BK
G301
(8W-15-13)
(8W-15-14)
(8W-15-23)
JR27
JR41

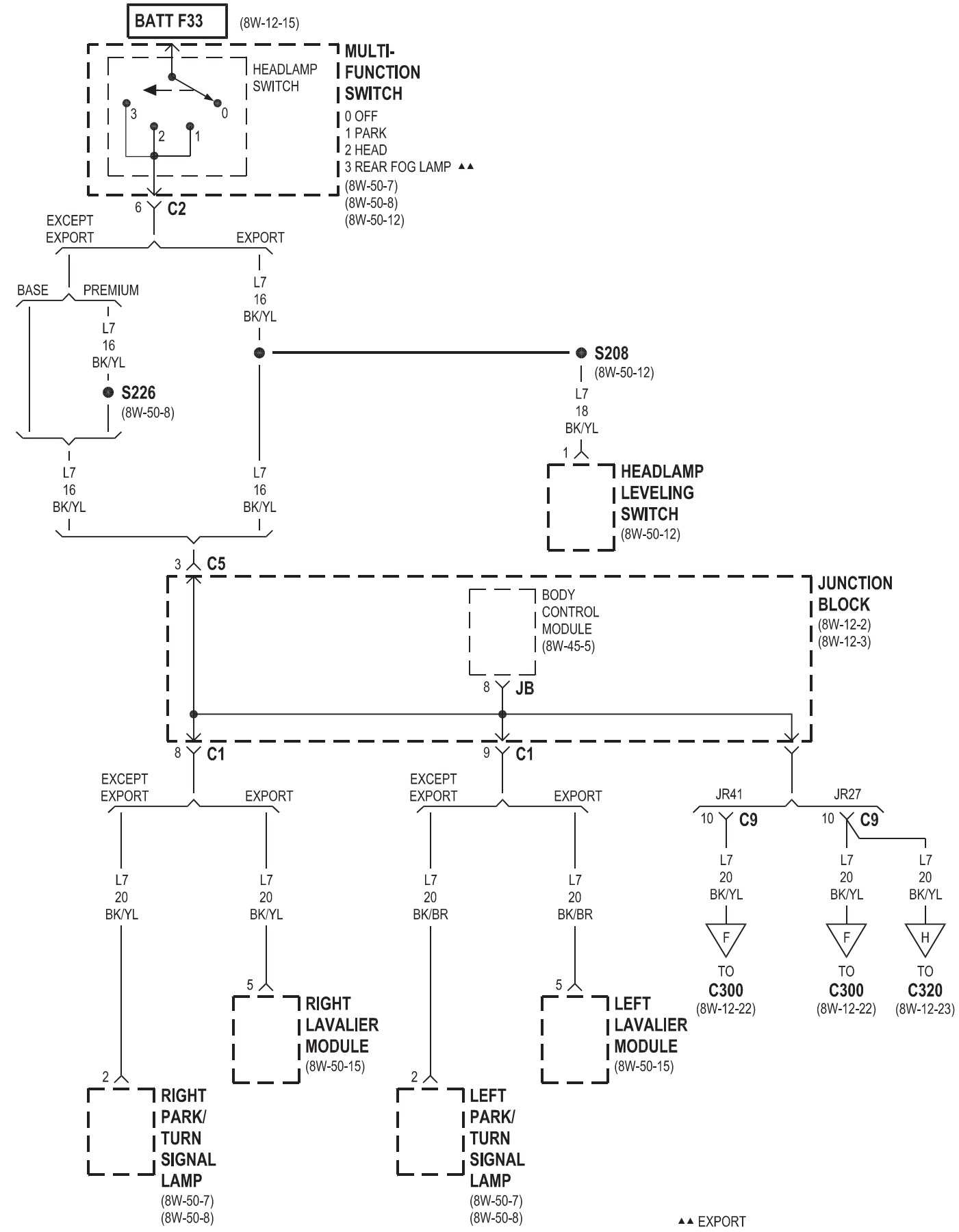
BATT F33
(8W-12-15)
HEADLAMP SWITCH
MULTI-FUNCTION SWITCH
0 OFF
1 PARK
2 HEAD
3 REAR FOG LAMP ▲▲
(8W-50-7)
(8W-50-8)
(8W-50-12)
6 C2
EXCEPT EXPORT
EXPORT
BASE
PREMIUM
L7 16 BK/YL
S226
(8W-50-8)
S208
(8W-50-12)
L7 18 BK/YL
1
HEADLAMP LEVELING SWITCH
(8W-50-12)
3 C5
JUNCTION BLOCK
(8W-12-2)
(8W-12-3)
BODY CONTROL MODULE
(8W-45-5)
8 JB
8 C1
9 C1
L7 20 BK/YL
L7 20 BK/BR
JR41
JR27
10 C9
F
H
TO C300 (8W-12-22)
TO C320 (8W-12-23)
5
RIGHT LAVALIER MODULE
(8W-50-15)
LEFT LAVALIER MODULE
(8W-50-15)
2
RIGHT PARK/ TURN SIGNAL LAMP
(8W-50-7)
(8W-50-8)
LEFT PARK/ TURN SIGNAL LAMP
(8W-50-7)
(8W-50-8)
▲▲ EXPORT

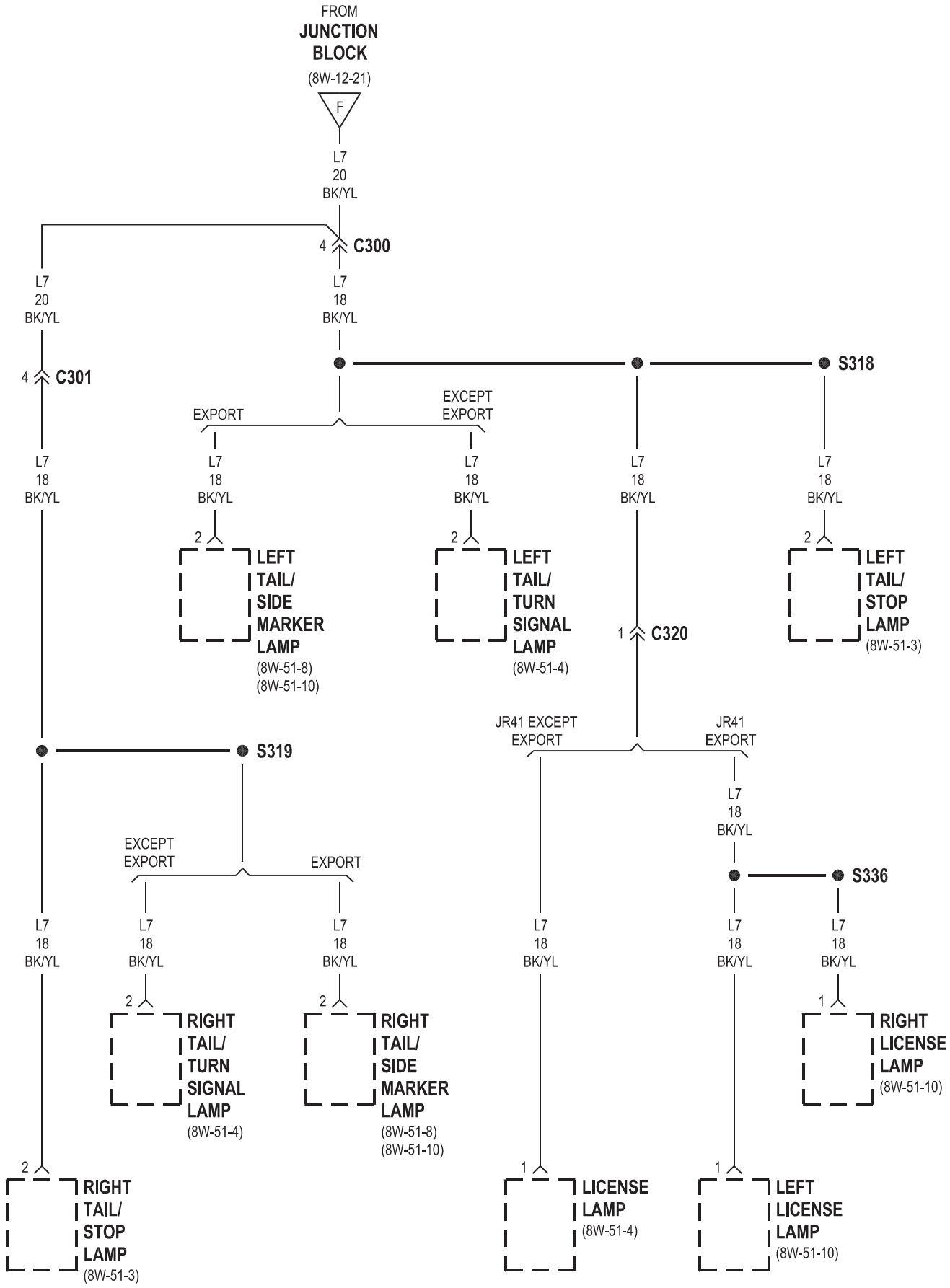
FROM
JUNCTION
BLOCK
(8W-12-21)
F
L7
20
BK/YL
4
C300
L7
20
BK/YL
L7
18
BK/YL
4
C301
S318
EXPORT
EXCEPT
EXPORT
L7
18
BK/YL
L7
18
BK/YL
L7
18
BK/YL
L7
18
BK/YL
L7
18
BK/YL
2
LEFT
TAIL/
SIDE
MARKER
LAMP
(8W-51-8)
(8W-51-10)
2
LEFT
TAIL/
TURN
SIGNAL
LAMP
(8W-51-4)
1
C320
2
LEFT
TAIL/
STOP
LAMP
(8W-51-3)
S319
JR41 EXCEPT
EXPORT
JR41
EXPORT
L7
18
BK/YL
EXCEPT
EXPORT
EXPORT
S336
L7
18
BK/YL
L7
18
BK/YL
L7
18
BK/YL
L7
18
BK/YL
L7
18
BK/YL
L7
18
BK/YL
2
RIGHT
TAIL/
TURN
SIGNAL
LAMP
(8W-51-4)
2
RIGHT
TAIL/
SIDE
MARKER
LAMP
(8W-51-8)
(8W-51-10)
1
RIGHT
LICENSE
LAMP
(8W-51-10)
2
RIGHT
TAIL/
STOP
LAMP
(8W-51-3)
1
LICENSE
LAMP
(8W-51-4)
1
LEFT
LICENSE
LAMP
(8W-51-10)

JR27

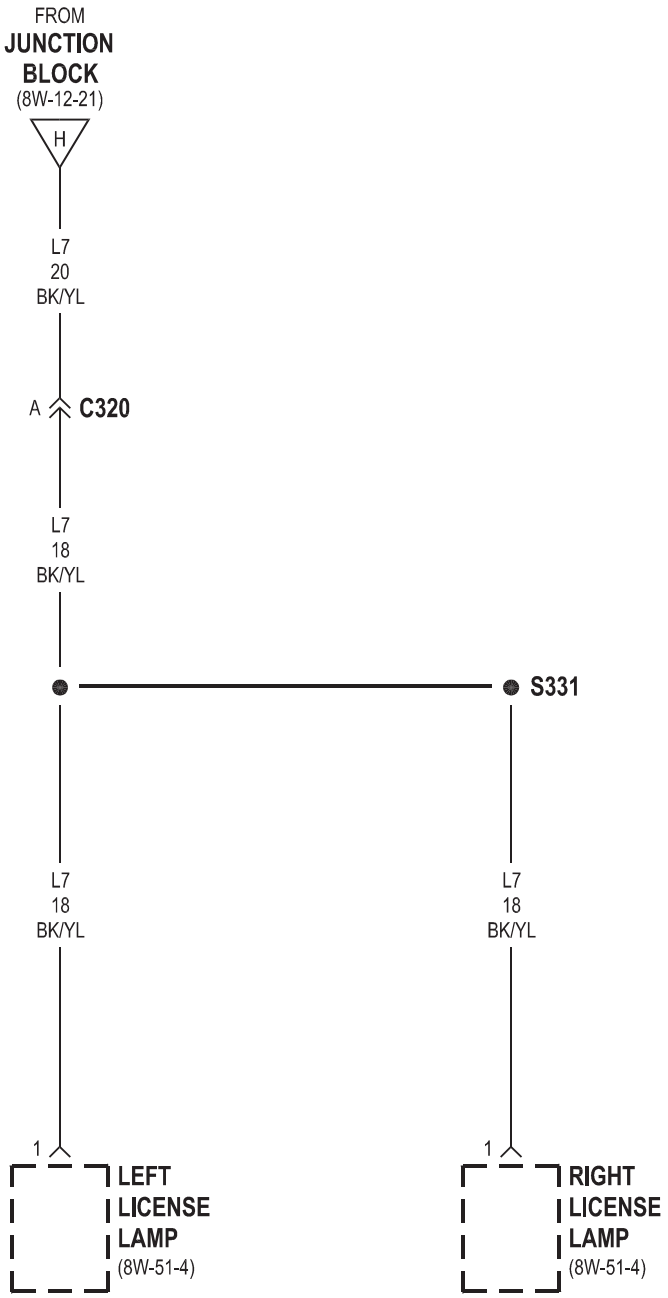
FROM
JUNCTION
BLOCK
(8W-12-21)
H
L7
20
BK/YL
A
C320
L7
18
BK/YL
S331
L7
18
BK/YL
L7
18
BK/YL
1
LEFT
LICENSE
LAMP
(8W-51-4)
1
RIGHT
LICENSE
LAMP
(8W-51-4)

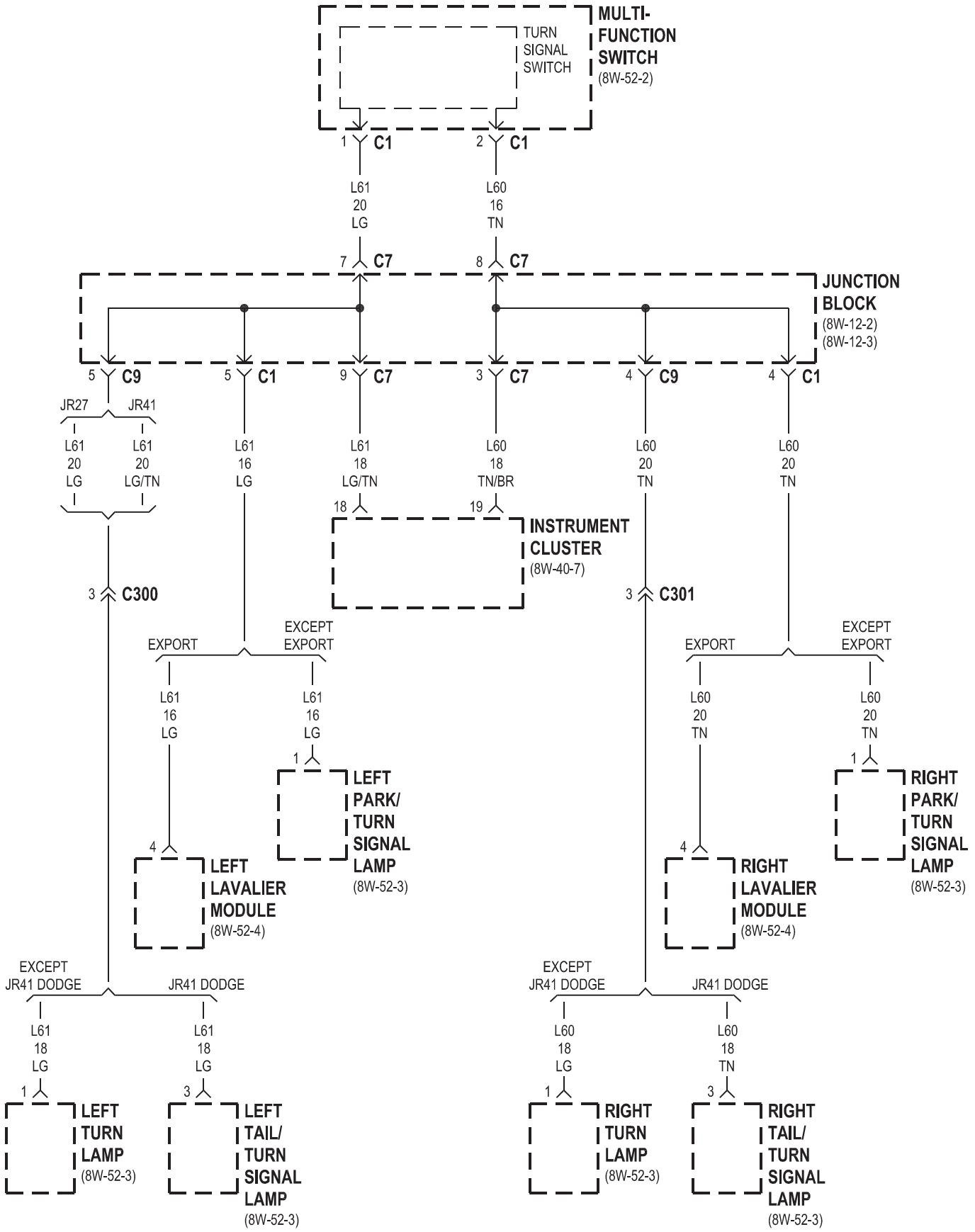
MULTI-FUNCTION SWITCH
(8W-52-2)
TURN SIGNAL SWITCH
1 C1
2 C1
L61 20 LG
L60 16 TN
7 C7
8 C7
JUNCTION BLOCK
(8W-12-2)
(8W-12-3)
5 C9
5 C1
9 C7
3 C7
4 C9
4 C1
JR27
JR41
L61 20 LG
L61 20 LG/TN
L61 16 LG
L61 18 LG/TN
L60 18 TN/BR
L60 20 TN
L60 20 TN
18
19
INSTRUMENT CLUSTER
(8W-40-7)
3 C300
3 C301
EXPORT
EXCEPT EXPORT
L61 16 LG
L61 16 LG
1
LEFT PARK/ TURN SIGNAL LAMP
(8W-52-3)
4
LEFT LAVALIER MODULE
(8W-52-4)
EXPORT
EXCEPT EXPORT
L60 20 TN
L60 20 TN
1
RIGHT PARK/ TURN SIGNAL LAMP
(8W-52-3)
4
RIGHT LAVALIER MODULE
(8W-52-4)
EXCEPT JR41 DODGE
JR41 DODGE
L61 18 LG
L61 18 LG
1
LEFT TURN LAMP
(8W-52-3)
3
LEFT TAIL/ TURN SIGNAL LAMP
(8W-52-3)
EXCEPT JR41 DODGE
JR41 DODGE
L60 18 LG
L60 18 TN
1
RIGHT TURN LAMP
(8W-52-3)
3
RIGHT TAIL/ TURN SIGNAL LAMP
(8W-52-3)

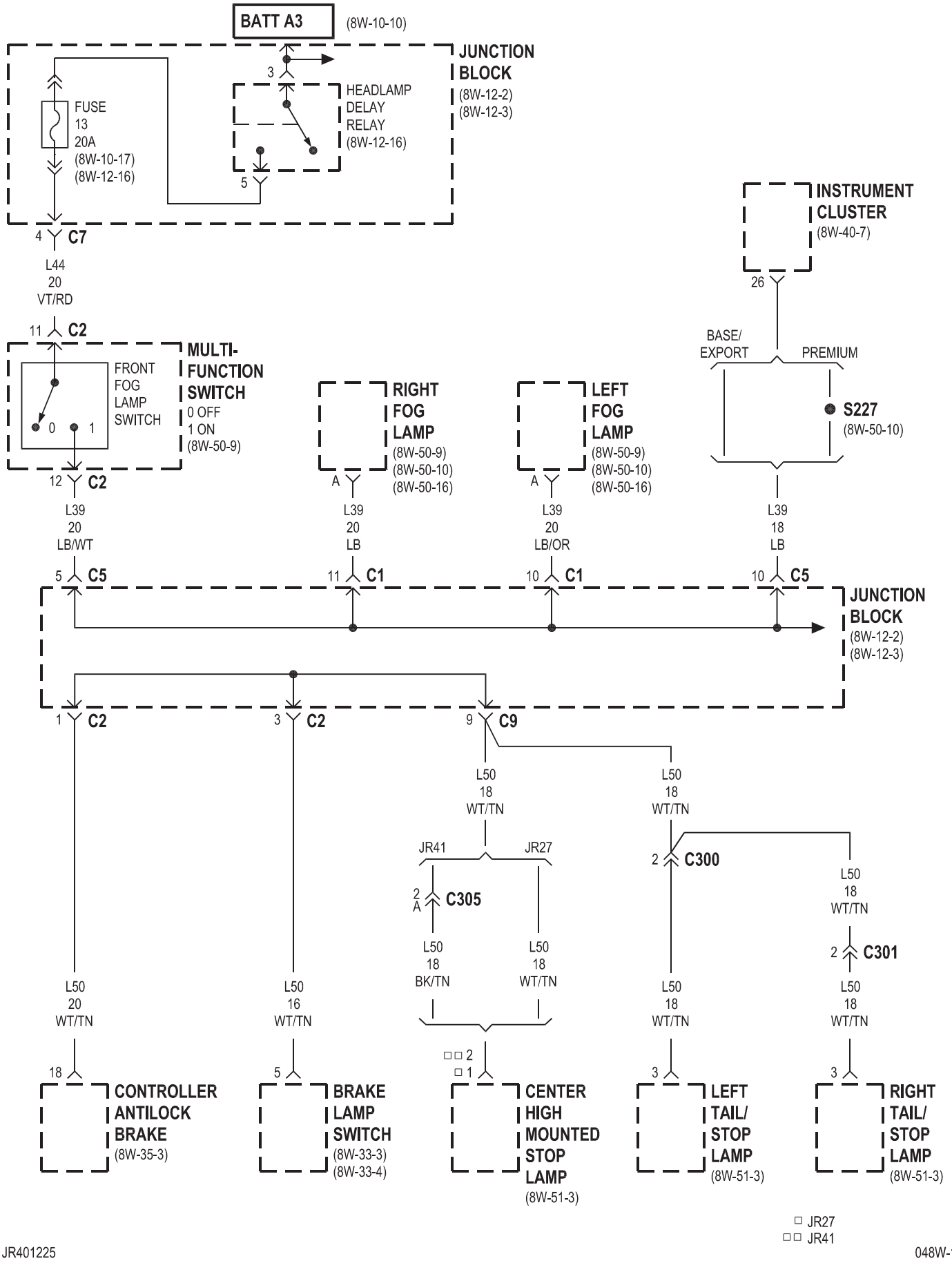
BATT A3
(8W-10-10)
JUNCTION BLOCK
(8W-12-2)
(8W-12-3)
FUSE 13 20A
(8W-10-17)
(8W-12-16)
HEADLAMP DELAY RELAY
(8W-12-16)
3
5
4 C7
L44 20 VT/RD
11 C2
MULTI-FUNCTION SWITCH
FRONT FOG LAMP SWITCH
0 OFF
1 ON
(8W-50-9)
0 1
12 C2
L39 20 LB/WT
5 C5
RIGHT FOG LAMP
(8W-50-9)
(8W-50-10)
(8W-50-16)
A
L39 20 LB
11 C1
LEFT FOG LAMP
(8W-50-9)
(8W-50-10)
(8W-50-16)
A
L39 20 LB/OR
10 C1
INSTRUMENT CLUSTER
(8W-40-7)
26
BASE/ EXPORT
PREMIUM
S227
(8W-50-10)
L39 18 LB
10 C5
JUNCTION BLOCK
(8W-12-2)
(8W-12-3)
1 C2
3 C2
9 C9
L50 18 WT/TN
L50 18 WT/TN
JR41
JR27
2 A C305
2 C300
L50 18 WT/TN
2 C301
L50 18 BK/TN
L50 18 WT/TN
L50 20 WT/TN
L50 16 WT/TN
L50 18 WT/TN
L50 18 WT/TN
2
1
18
5
3
3
CONTROLLER ANTILOCK BRAKE
(8W-35-3)
BRAKE LAMP SWITCH
(8W-33-3)
(8W-33-4)
CENTER HIGH MOUNTED STOP LAMP
(8W-51-3)
LEFT TAIL/ STOP LAMP
(8W-51-3)
RIGHT TAIL/ STOP LAMP
(8W-51-3)
JR27
JR41

JR41

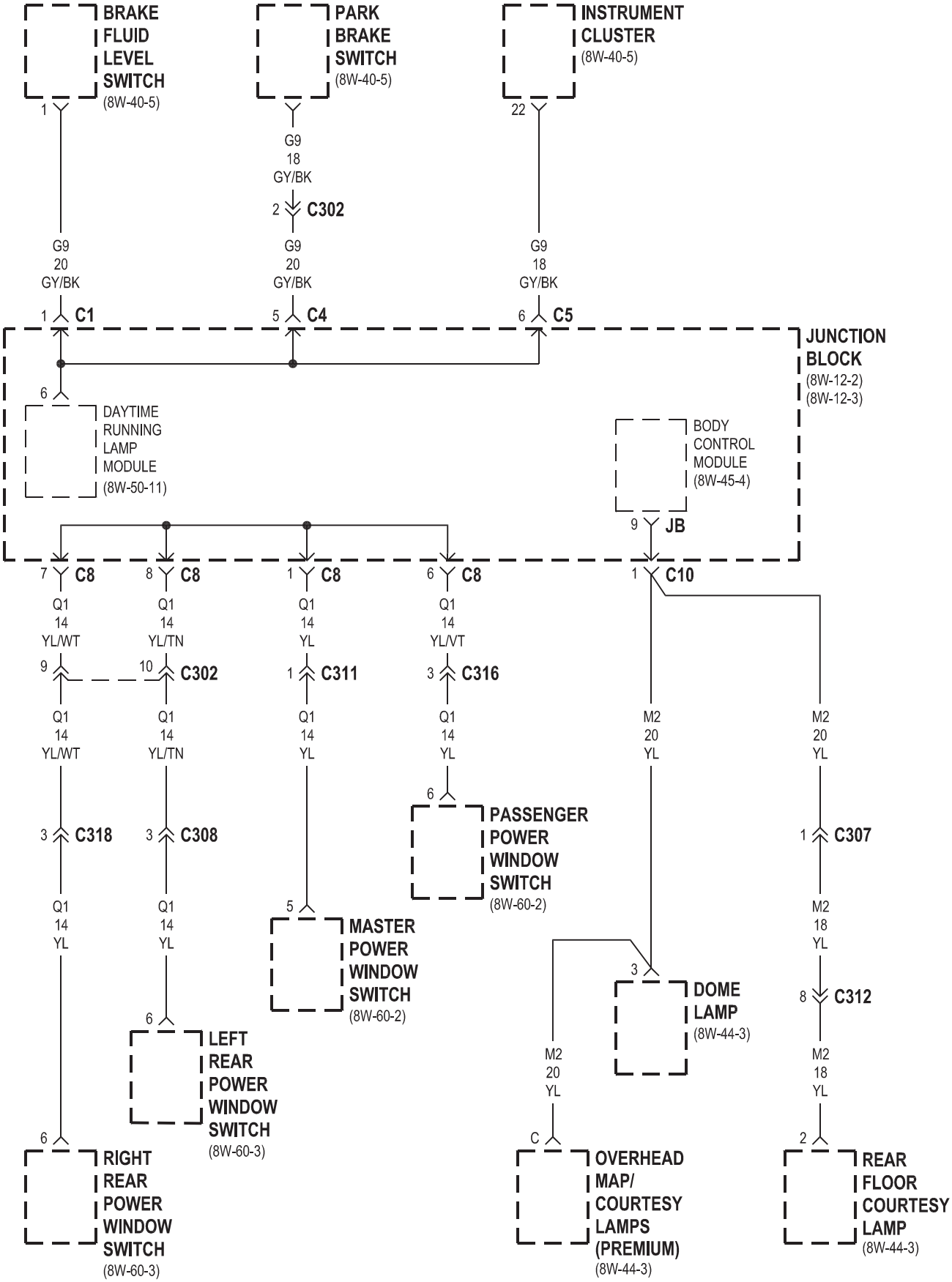
BRAKE FLUID LEVEL SWITCH (8W-40-5)
PARK BRAKE SWITCH (8W-40-5)
INSTRUMENT CLUSTER (8W-40-5)
1
22
G9 18 GY/BK
2 C302
G9 20 GY/BK
G9 20 GY/BK
G9 18 GY/BK
1 C1
5 C4
6 C5
JUNCTION BLOCK (8W-12-2) (8W-12-3)
6
DAYTIME RUNNING LAMP MODULE (8W-50-11)
BODY CONTROL MODULE (8W-45-4)
9 JB
7 C8
8 C8
1 C8
6 C8
1 C10
Q1 14 YL/WT
Q1 14 YL/TN
Q1 14 YL
Q1 14 YL/VT
9
10 C302
1 C311
3 C316
Q1 14 YL/WT
Q1 14 YL/TN
Q1 14 YL
Q1 14 YL
M2 20 YL
M2 20 YL
6
PASSENGER POWER WINDOW SWITCH (8W-60-2)
3 C318
3 C308
1 C307
Q1 14 YL
Q1 14 YL
5
MASTER POWER WINDOW SWITCH (8W-60-2)
M2 18 YL
3
DOME LAMP (8W-44-3)
8 C312
6
LEFT REAR POWER WINDOW SWITCH (8W-60-3)
M2 20 YL
M2 18 YL
6
C
2
RIGHT REAR POWER WINDOW SWITCH (8W-60-3)
OVERHEAD MAP/ COURTESY LAMPS (PREMIUM) (8W-44-3)
REAR FLOOR COURTESY LAMP (8W-44-3)

JR27

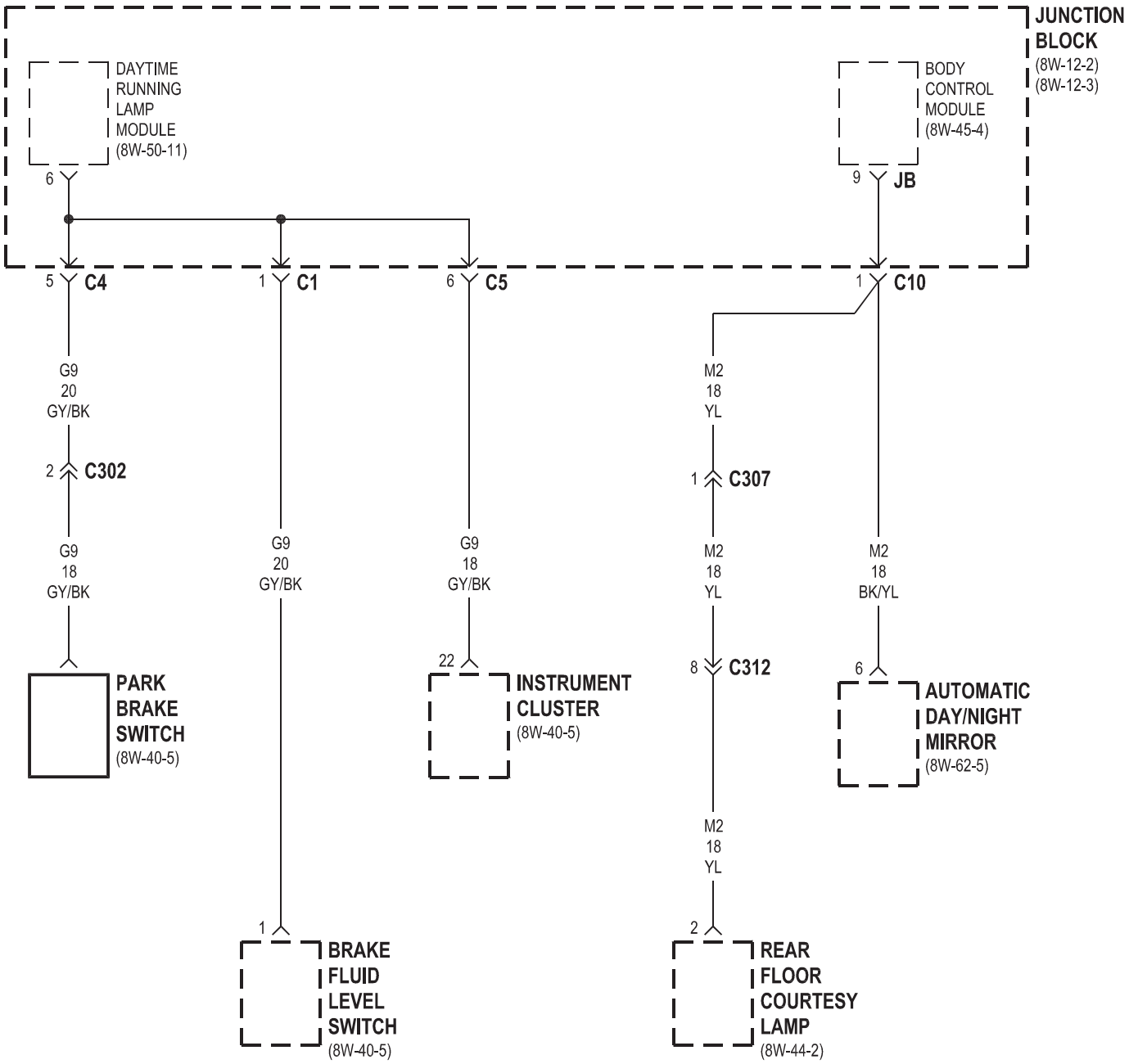
JUNCTION BLOCK
(8W-12-2)
(8W-12-3)
DAYTIME RUNNING LAMP MODULE
(8W-50-11)
BODY CONTROL MODULE
(8W-45-4)
6
9
JB
5
C4
1
C1
6
C5
1
C10
G9
20
GY/BK
2
C302
G9
18
GY/BK
PARK BRAKE SWITCH
(8W-40-5)
G9
20
GY/BK
1
BRAKE FLUID LEVEL SWITCH
(8W-40-5)
G9
18
GY/BK
22
INSTRUMENT CLUSTER
(8W-40-5)
M2
18
YL
1
C307
M2
18
YL
8
C312
M2
18
YL
2
REAR FLOOR COURTESY LAMP
(8W-44-2)
M2
18
BK/YL
6
AUTOMATIC DAY/NIGHT MIRROR
(8W-62-5)

8W-15 GROUND DISTRIBUTION

Component	Page
A/C-Heater Control	8W-15-8
Airbag Control Module	8W-15-8
Automatic Day/Night Mirror	8W-15-12, 21
Automatic Temperature Control Head	8W-15-8, 11
Autostick Switch	8W-15-14, 23
Battery	8W-15-2
Blower Motor Power Module	8W-15-11
Body Control Module	8W-15-6, 11, 12, 22
Brake Fluid Level Switch	8W-15-3
Brake Lamp Switch	8W-15-3
Center High Mounted Stop Lamp	8W-15-16, 24
Cigar Lighter/Power Outlet	8W-15-8
Clockspring	8W-15-10
Clutch Interlock/Upstop Switch	8W-15-4
Compass/Mini-Trip Computer	8W-15-10
Controller Antilock Brake	8W-15-8
Data Link Connector	8W-15-11, 12, 22
Daytime Running Lamp Module	8W-15-12, 22
Decklid Cylinder Lock Switch	8W-15-16, 24
Decklid Release Solenoid/Ajar Switch	8W-15-16, 24
Decklid Release Switch	8W-15-10
Driver Door Lock Motor/Ajar Switch	8W-15-11
Driver Door Lock Switch	8W-15-11
Driver Heated Seat Module	8W-15-14, 21
Driver Seat Belt Solenoid	8W-15-14
Driver Seat Belt Switch	8W-15-24
Driver Seat Belt Tensioner	8W-15-9
Front Washer Pump Motor	8W-15-5
Front Wiper Motor	8W-15-3
Front Wiper On/Off Relay	8W-15-3
Fuel Pump Module	8W-15-16, 20
G100	8W-15-2
G103	8W-15-2, 3, 4
G104	8W-15-4
G106	8W-15-5
G108	8W-15-5, 6, 7
G113	8W-15-8
G201	8W-15-8
G202	8W-15-8
G203	8W-15-9, 10, 11
G204	8W-15-10
G300	8W-15-18, 19, 20
G301	8W-15-12, 13, 14, 22, 23
G302	8W-15-16, 24
G303	8W-15-8
G310	8W-15-16
Generator	8W-15-2
Headlamp Leveling Switch	8W-15-12, 22
Headlamp Washer Pump Motor	8W-15-7
Heated Seat Switch	8W-15-14, 21
Horn	8W-15-5
Ignition Switch	8W-15-10
Instrument Cluster	8W-15-10, 12, 22
Junction Block	8W-15-12, 13, 14, 21, 22, 23
Left Back-Up Lamp	8W-15-15, 18, 19
Left Fog Lamp	8W-15-6
Left Headlamp	8W-15-6
Left Lavalier Module	8W-15-6
Left License Lamp	8W-15-16, 17
Left Park/Turn Signal Lamp	8W-15-6
Left Power Mirror	8W-15-11
Left Rear Door Lock Motor/Ajar Switch	8W-15-23
Left Rear Fog Lamp	8W-15-15, 17
Left Tail/Side Marker Lamp	8W-15-15, 19
Left Tail/Stop Lamp	8W-15-15, 18, 19
Left Tail/Turn Signal Lamp	8W-15-18
Left Turn Lamp	8W-15-15
Left Visor/Vanity Lamps	8W-15-21
License Lamp	8W-15-17
Master Power Window Switch	8W-15-11
Multi-Function Switch	8W-15-10, 11
Natural Vacuum Leak Detection Assembly	8W-15-4
Overhead Map/Courtesy Lamps	8W-15-21
Oxygen Sensor 1/1 Right Bank Up	8W-15-2
Oxygen Sensor 1/1 Upstream	8W-15-2
Oxygen Sensor 1/2 Downstream	8W-15-2
Oxygen Sensor 1/2 Right Bank Down	8W-15-2
Oxygen Sensor 2/1 Left Bank Up	8W-15-2
Oxygen Sensor 2/2 Left Bank Down	8W-15-2
Passenger Door Lock Motor/Ajar Switch	8W-15-9
Passenger Door Lock Switch	8W-15-9
Passenger Heated Seat Module	8W-15-14, 21
Passenger Seat Belt Solenoid	8W-15-14
PCV Heater	8W-15-2
Power Amplifier	8W-15-12, 22
Power Mirror Switch	8W-15-12, 22
Power Outlet	8W-15-13, 14, 23
Power Seat Switch	8W-15-13, 14, 23
Power Steering Pressure Switch	8W-15-2
Power Top Switch	8W-15-13, 14
Power Top Up/Down Relays	8W-15-16
Powertrain Control Module	8W-15-3, 4, 7
Radiator Fan	8W-15-6
Radio	8W-15-10
Rear Fog Lamp Relay	8W-15-3
Rear Window Defogger	8W-15-8
Right Back-Up Lamp	8W-15-15, 20
Right Fog Lamp	8W-15-5
Right Headlamp	8W-15-5
Right Lavalier Module	8W-15-5
Right License Lamp	8W-15-16, 17
Right Park/Turn Signal Lamp	8W-15-5
Right Power Mirror	8W-15-9
Right Rear Door Lock Motor/Ajar Switch	8W-15-23
Right Rear Fog Lamp	8W-15-15, 17
Right Tail/Side Marker Lamp	8W-15-15, 20
Right Tail/Stop Lamp	8W-15-15, 20
Right Tail/Turn Signal Lamp	8W-15-20
Right Turn Lamp	8W-15-15, 20
Right Visor/Vanity Lamps	8W-15-12, 21
Seat Belt Control Module	8W-15-14
Sentry Key Immobilizer Module	8W-15-12, 22
Sunroof Control Module	8W-15-21
Traction Control Switch	8W-15-10
Transmission	8W-15-2
Transmission Control Module	8W-15-6
Transmission Control Relay	8W-15-4, 7
Transmission Range Indicator Illumination	8W-15-13, 14, 23
Vehicle Speed Control Servo	8W-15-3

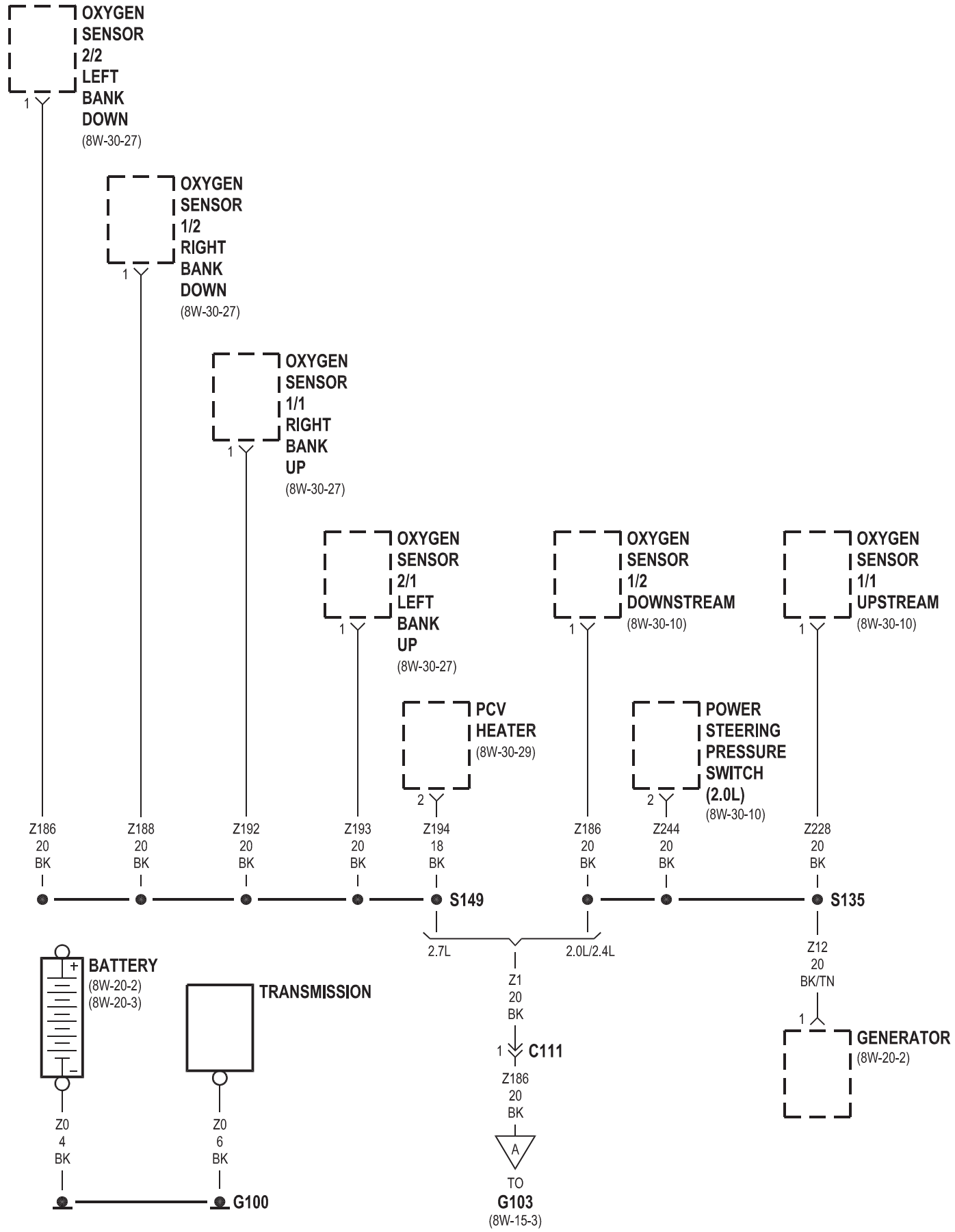
OXYGEN SENSOR 2/2 LEFT BANK DOWN
(8W-30-27)
OXYGEN SENSOR 1/2 RIGHT BANK DOWN
(8W-30-27)
OXYGEN SENSOR 1/1 RIGHT BANK UP
(8W-30-27)
OXYGEN SENSOR 2/1 LEFT BANK UP
(8W-30-27)
OXYGEN SENSOR 1/2 DOWNSTREAM
(8W-30-10)
OXYGEN SENSOR 1/1 UPSTREAM
(8W-30-10)
PCV HEATER
(8W-30-29)
POWER STEERING PRESSURE SWITCH (2.0L)
(8W-30-10)
Z186 20 BK
Z188 20 BK
Z192 20 BK
Z193 20 BK
Z194 18 BK
Z186 20 BK
Z244 20 BK
Z228 20 BK
S149
S135
2.7L
2.0L/2.4L
Z1 20 BK
C111
Z186 20 BK
TO G103
(8W-15-3)
Z12 20 BK/TN
GENERATOR
(8W-20-2)
BATTERY
(8W-20-2)
(8W-20-3)
TRANSMISSION
Z0 4 BK
Z0 6 BK
G100

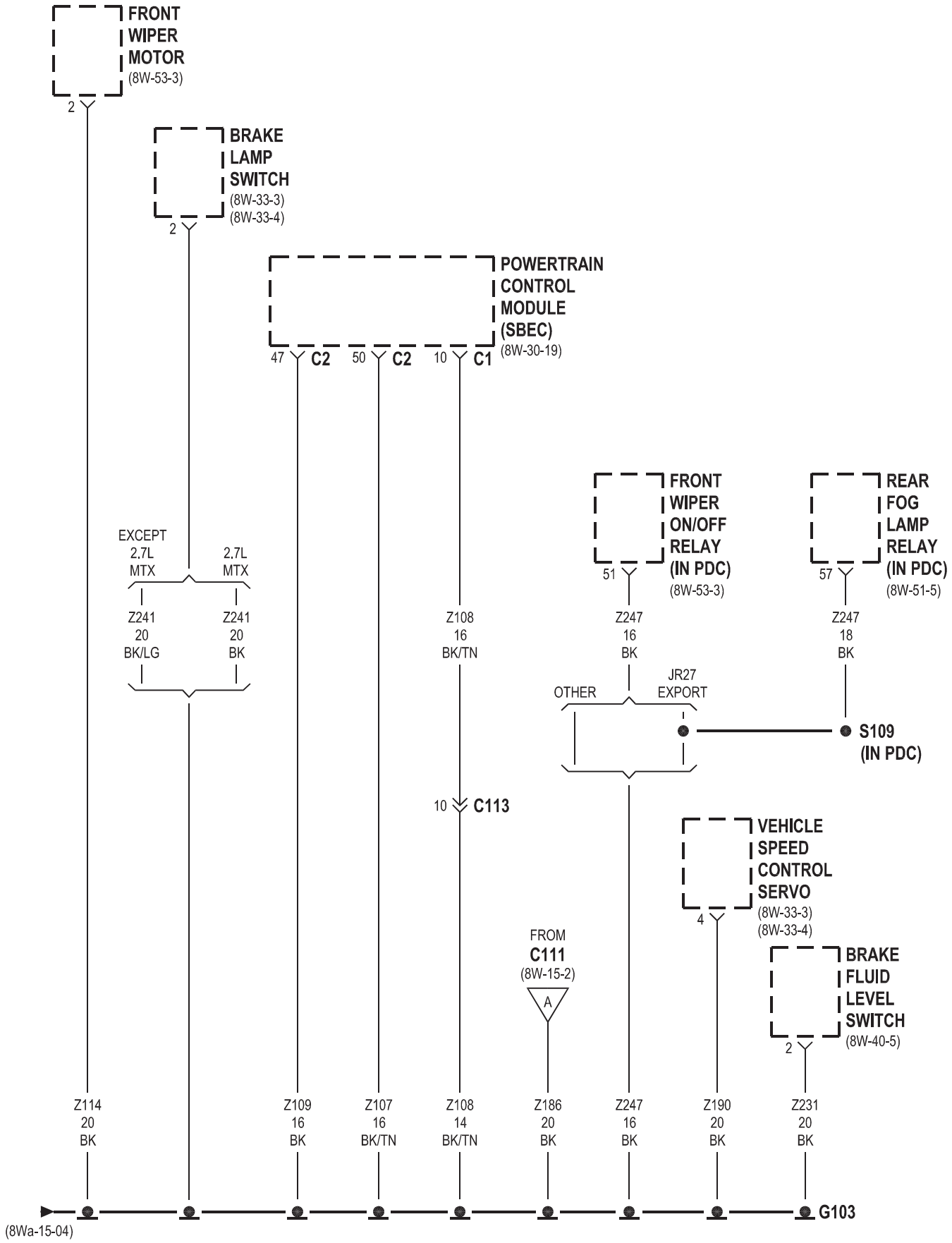
FRONT WIPER MOTOR (8W-53-3)
2
BRAKE LAMP SWITCH (8W-33-3) (8W-33-4)
2
POWERTRAIN CONTROL MODULE (SBEC) (8W-30-19)
47 C2
50 C2
10 C1
FRONT WIPER ON/OFF RELAY (IN PDC) (8W-53-3)
51
REAR FOG LAMP RELAY (IN PDC) (8W-51-5)
57
EXCEPT 2.7L MTX
2.7L MTX
Z241 20 BK/LG
Z241 20 BK
Z108 16 BK/TN
Z247 16 BK
Z247 18 BK
OTHER
JR27 EXPORT
S109 (IN PDC)
10 C113
VEHICLE SPEED CONTROL SERVO (8W-33-3) (8W-33-4)
4
FROM C111 (8W-15-2)
A
BRAKE FLUID LEVEL SWITCH (8W-40-5)
2
Z114 20 BK
Z109 16 BK
Z107 16 BK/TN
Z108 14 BK/TN
Z186 20 BK
Z247 16 BK
Z190 20 BK
Z231 20 BK
G103
(8Wa-15-04)

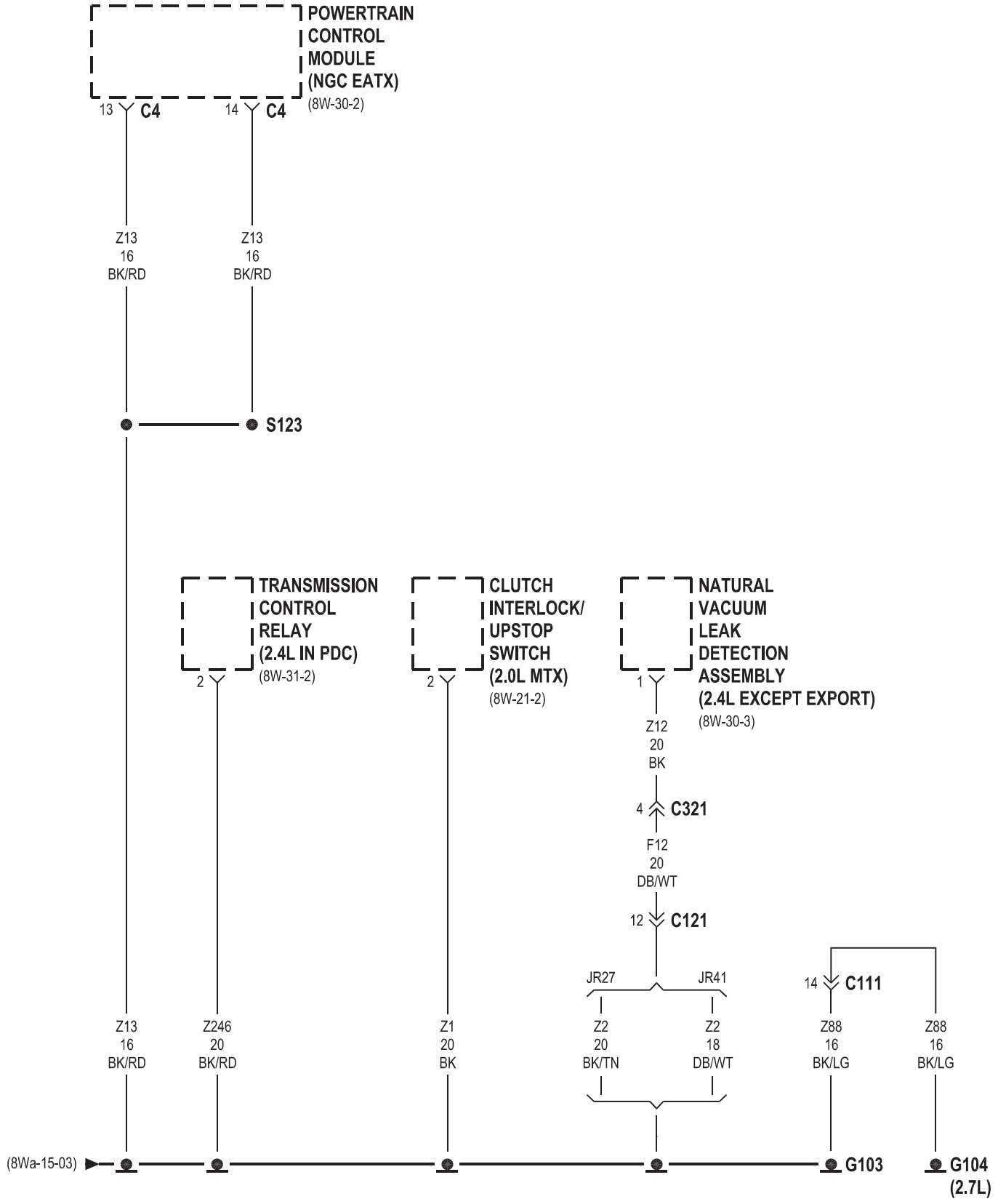
POWERTRAIN CONTROL MODULE (NGC EATX)
(8W-30-2)
13 C4
14 C4
Z13 16 BK/RD
Z13 16 BK/RD
S123
TRANSMISSION CONTROL RELAY (2.4L IN PDC)
(8W-31-2)
2
CLUTCH INTERLOCK/ UPSTOP SWITCH (2.0L MTX)
(8W-21-2)
2
NATURAL VACUUM LEAK DETECTION ASSEMBLY (2.4L EXCEPT EXPORT)
(8W-30-3)
1
Z12 20 BK
4 C321
F12 20 DB/WT
12 C121
JR27
JR41
14 C111
Z13 16 BK/RD
Z246 20 BK/RD
Z1 20 BK
Z2 20 BK/TN
Z2 18 DB/WT
Z88 16 BK/LG
Z88 16 BK/LG
(8Wa-15-03)
G103
G104 (2.7L)

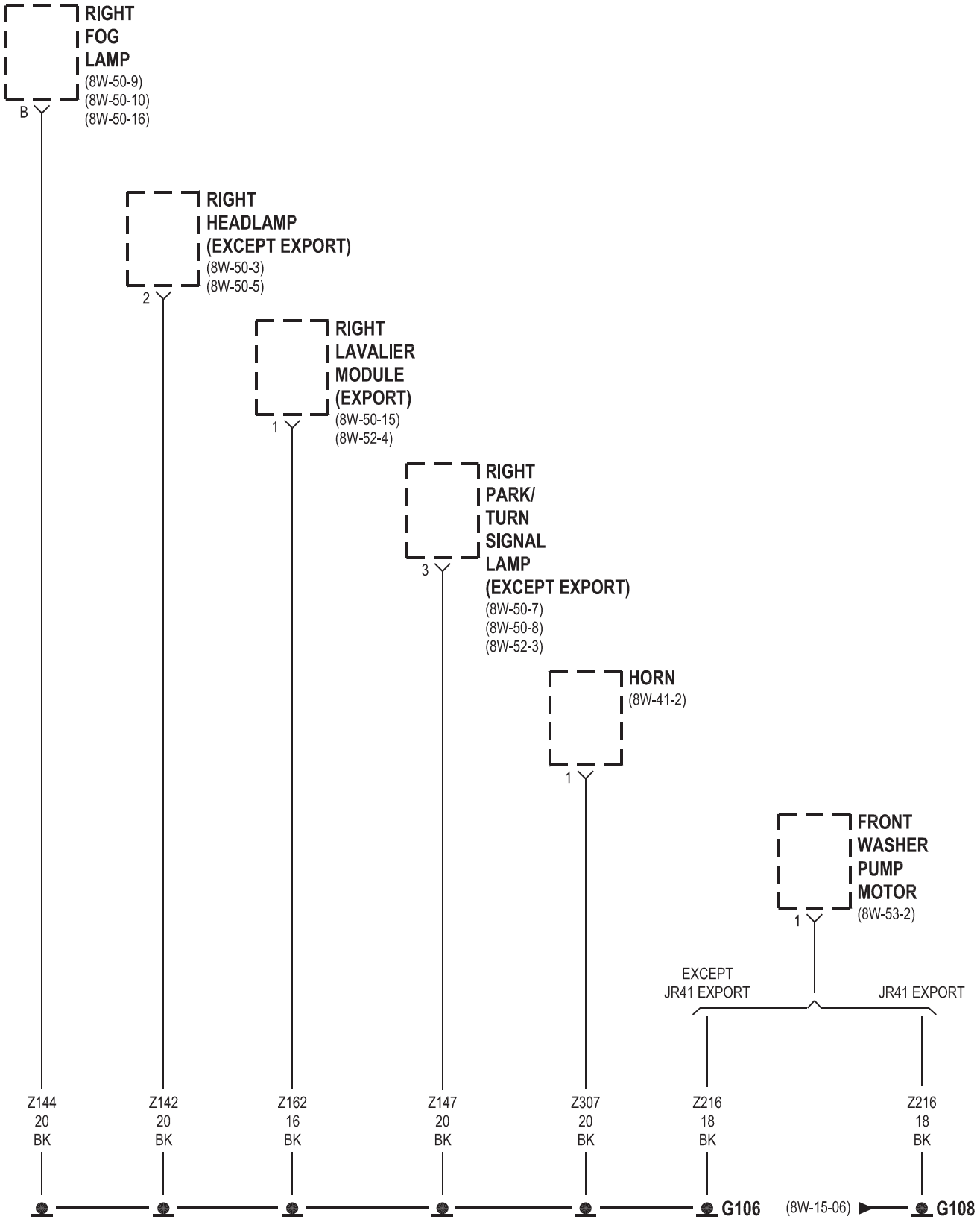
RIGHT FOG LAMP
(8W-50-9)
(8W-50-10)
(8W-50-16)
B
RIGHT HEADLAMP (EXCEPT EXPORT)
(8W-50-3)
(8W-50-5)
2
RIGHT LAVALIER MODULE (EXPORT)
(8W-50-15)
(8W-52-4)
1
RIGHT PARK/ TURN SIGNAL LAMP (EXCEPT EXPORT)
(8W-50-7)
(8W-50-8)
(8W-52-3)
3
HORN
(8W-41-2)
1
FRONT WASHER PUMP MOTOR
(8W-53-2)
1
EXCEPT JR41 EXPORT
JR41 EXPORT
Z144 20 BK
Z142 20 BK
Z162 16 BK
Z147 20 BK
Z307 20 BK
Z216 18 BK
Z216 18 BK
G106
(8W-15-06)
G108

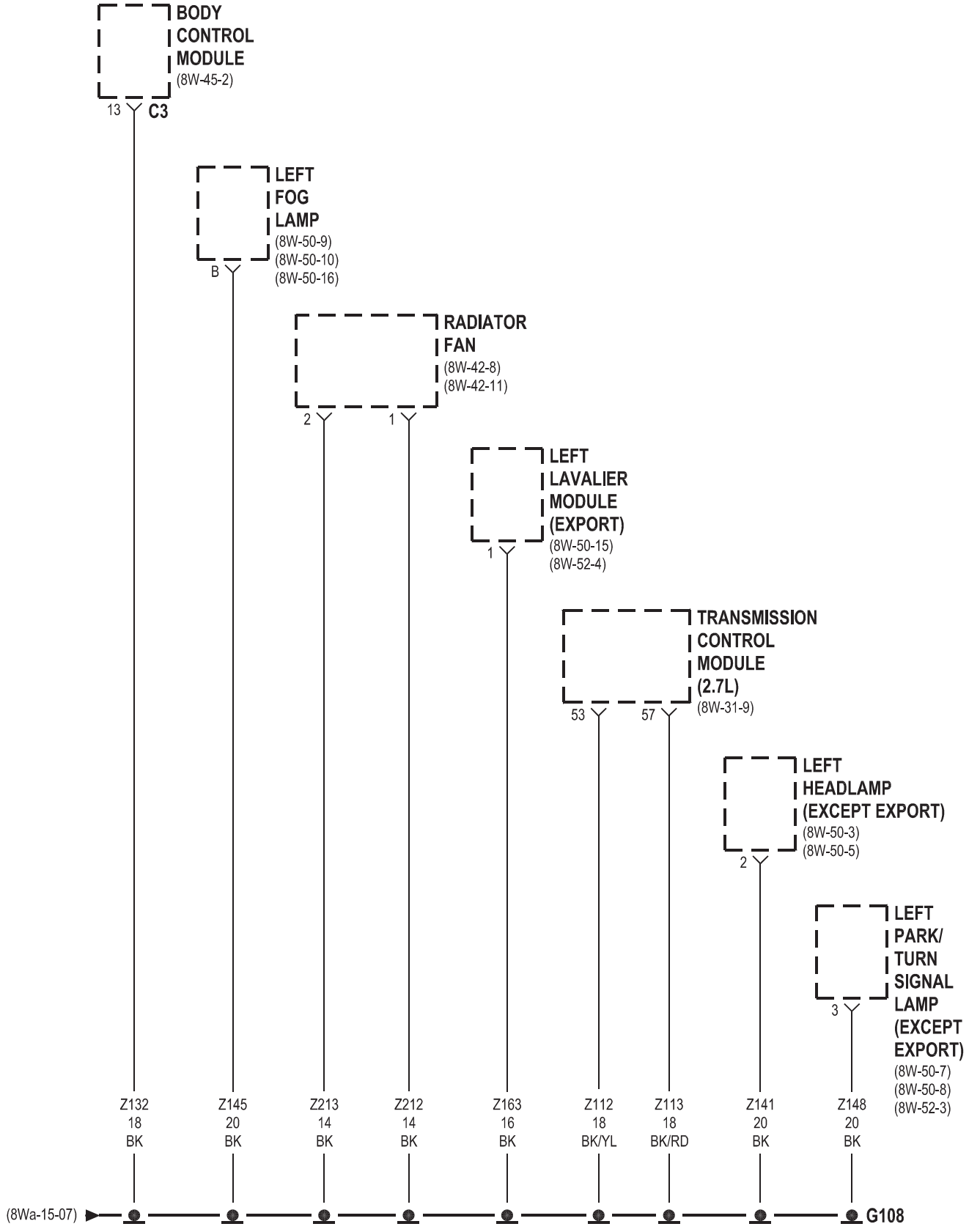
BODY CONTROL MODULE
(8W-45-2)
13
C3
LEFT FOG LAMP
(8W-50-9)
(8W-50-10)
(8W-50-16)
B
RADIATOR FAN
(8W-42-8)
(8W-42-11)
2
1
LEFT LAVALIER MODULE (EXPORT)
(8W-50-15)
(8W-52-4)
1
TRANSMISSION CONTROL MODULE (2.7L)
(8W-31-9)
53
57
LEFT HEADLAMP (EXCEPT EXPORT)
(8W-50-3)
(8W-50-5)
2
LEFT PARK/ TURN SIGNAL LAMP (EXCEPT EXPORT)
(8W-50-7)
(8W-50-8)
(8W-52-3)
3
Z132 18 BK
Z145 20 BK
Z213 14 BK
Z212 14 BK
Z163 16 BK
Z112 18 BK/YL
Z113 18 BK/RD
Z141 20 BK
Z148 20 BK
(8Wa-15-07)
G108

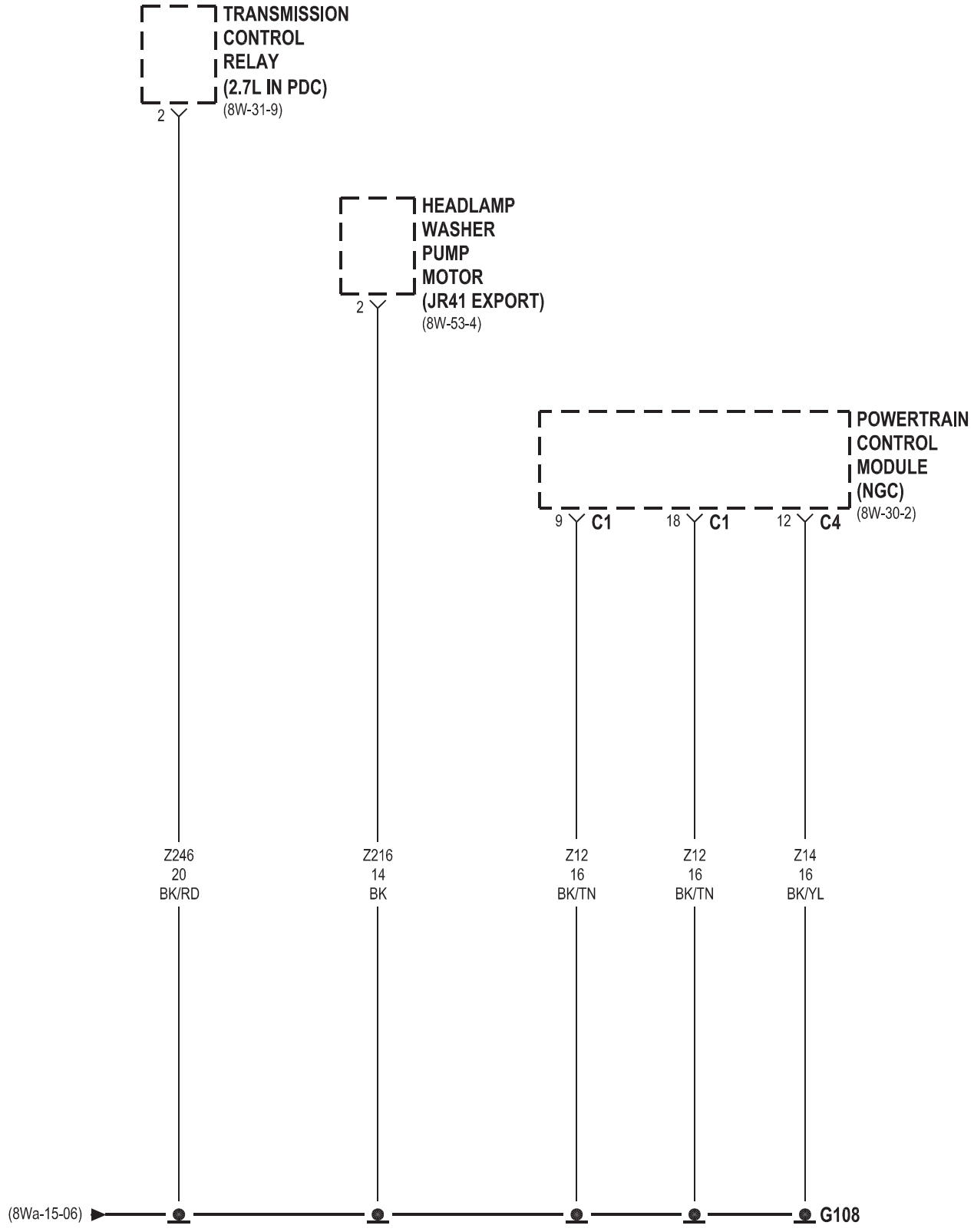
TRANSMISSION
CONTROL
RELAY
(2.7L IN PDC)
(8W-31-9)
2
HEADLAMP
WASHER
PUMP
MOTOR
(JR41 EXPORT)
(8W-53-4)
2
POWERTRAIN
CONTROL
MODULE
(NGC)
(8W-30-2)
9 C1
18 C1
12 C4
Z246
20
BK/RD
Z216
14
BK
Z12
16
BK/TN
Z12
16
BK/TN
Z14
16
BK/YL
(8Wa-15-06)
G108

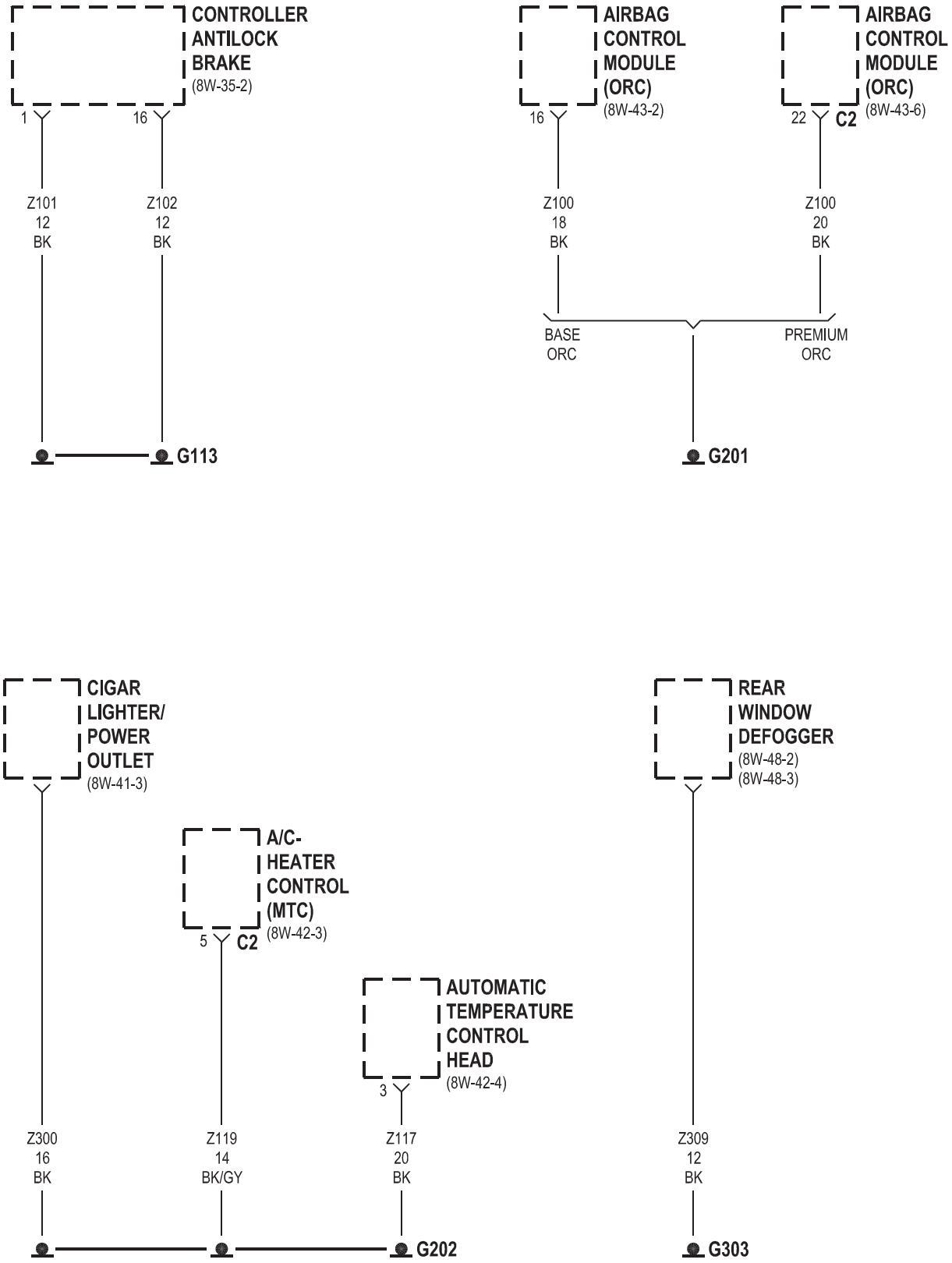
CONTROLLER ANTILOCK BRAKE
(8W-35-2)
1
16
Z101 12 BK
Z102 12 BK
G113
AIRBAG CONTROL MODULE (ORC)
(8W-43-2)
16
AIRBAG CONTROL MODULE (ORC)
(8W-43-6)
22
C2
Z100 18 BK
Z100 20 BK
BASE ORC
PREMIUM ORC
G201
CIGAR LIGHTER/ POWER OUTLET
(8W-41-3)
A/C- HEATER CONTROL (MTC)
(8W-42-3)
5
C2
AUTOMATIC TEMPERATURE CONTROL HEAD
(8W-42-4)
3
Z300 16 BK
Z119 14 BK/GY
Z117 20 BK
G202
REAR WINDOW DEFOGGER
(8W-48-2)
(8W-48-3)
Z309 12 BK
G303

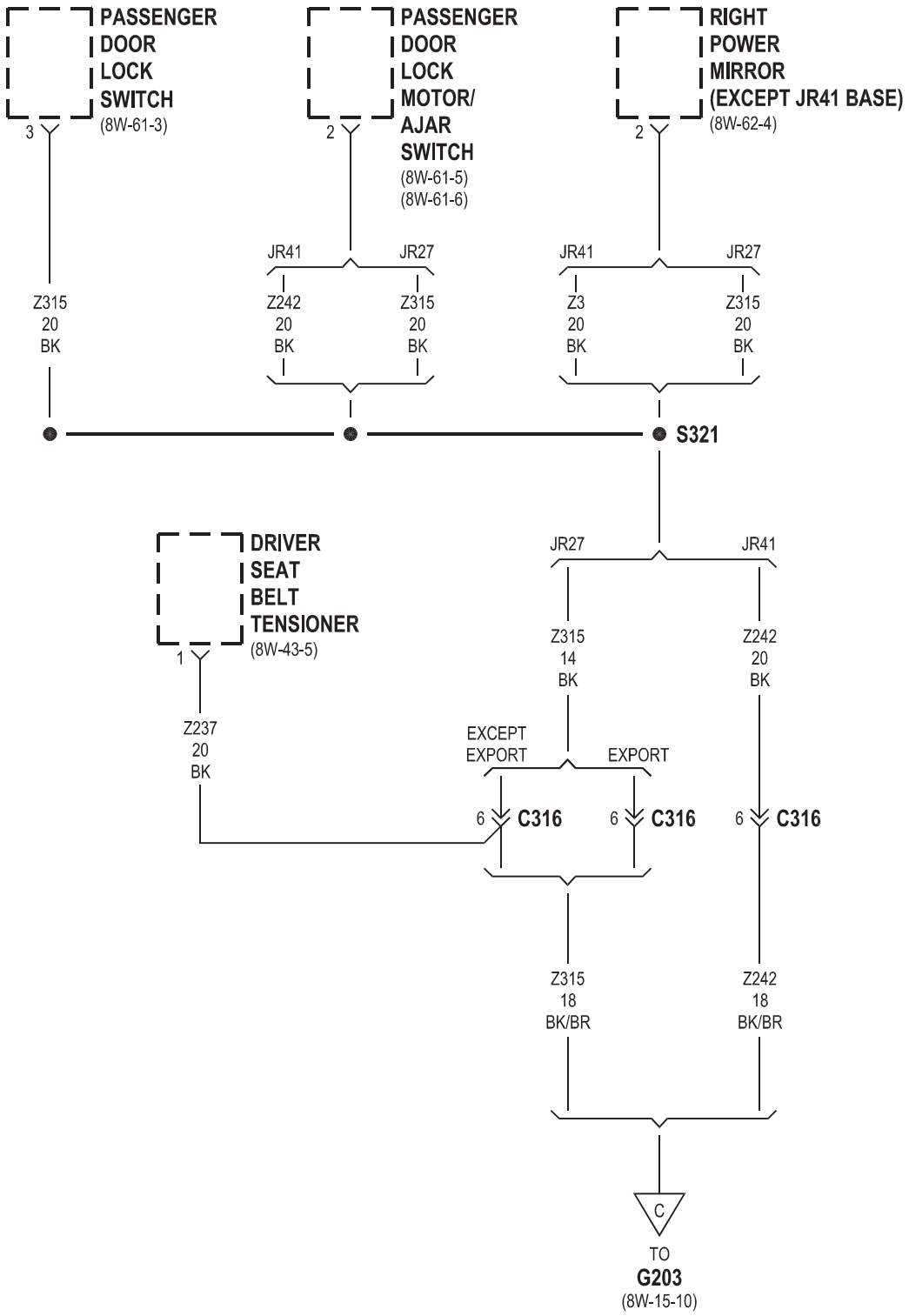
PASSENGER DOOR LOCK SWITCH
(8W-61-3)
3
PASSENGER DOOR LOCK MOTOR/ AJAR SWITCH
(8W-61-5)
(8W-61-6)
2
RIGHT POWER MIRROR (EXCEPT JR41 BASE)
(8W-62-4)
2
JR41
JR27
JR41
JR27
Z315 20 BK
Z242 20 BK
Z315 20 BK
Z3 20 BK
Z315 20 BK
S321
DRIVER SEAT BELT TENSIONER
(8W-43-5)
1
JR27
JR41
Z315 14 BK
Z242 20 BK
Z237 20 BK
EXCEPT EXPORT
EXPORT
6 C316
6 C316
6 C316
Z315 18 BK/BR
Z242 18 BK/BR
C
TO
G203
(8W-15-10)

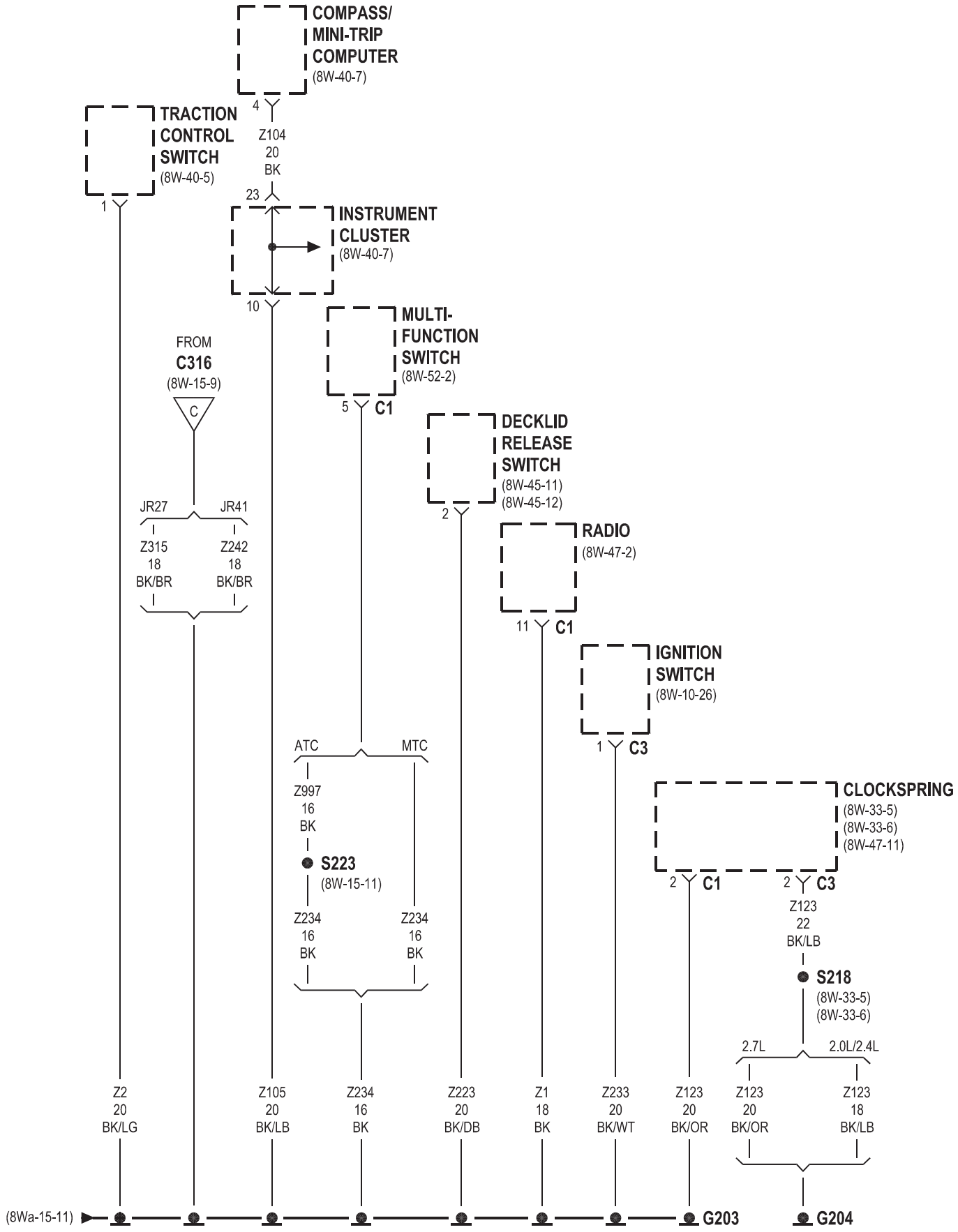
COMPASS/
MINI-TRIP
COMPUTER
(8W-40-7)
4
Z104
20
BK
TRACTION
CONTROL
SWITCH
(8W-40-5)
1
23
INSTRUMENT
CLUSTER
(8W-40-7)
10
MULTI-
FUNCTION
SWITCH
(8W-52-2)
5
C1
FROM
C316
(8W-15-9)
C
DECKLID
RELEASE
SWITCH
(8W-45-11)
(8W-45-12)
2
JR27
JR41
Z315
18
BK/BR
Z242
18
BK/BR
RADIO
(8W-47-2)
11
C1
IGNITION
SWITCH
(8W-10-26)
1
C3
ATC
MTC
Z997
16
BK
S223
(8W-15-11)
Z234
16
BK
Z234
16
BK
CLOCKSPRING
(8W-33-5)
(8W-33-6)
(8W-47-11)
2
C1
2
C3
Z123
22
BK/LB
S218
(8W-33-5)
(8W-33-6)
2.7L
2.0L/2.4L
Z2
20
BK/LG
Z105
20
BK/LB
Z234
16
BK
Z223
20
BK/DB
Z1
18
BK
Z233
20
BK/WT
Z123
20
BK/OR
Z123
20
BK/OR
Z123
18
BK/LB
(8Wa-15-11)
G203
G204

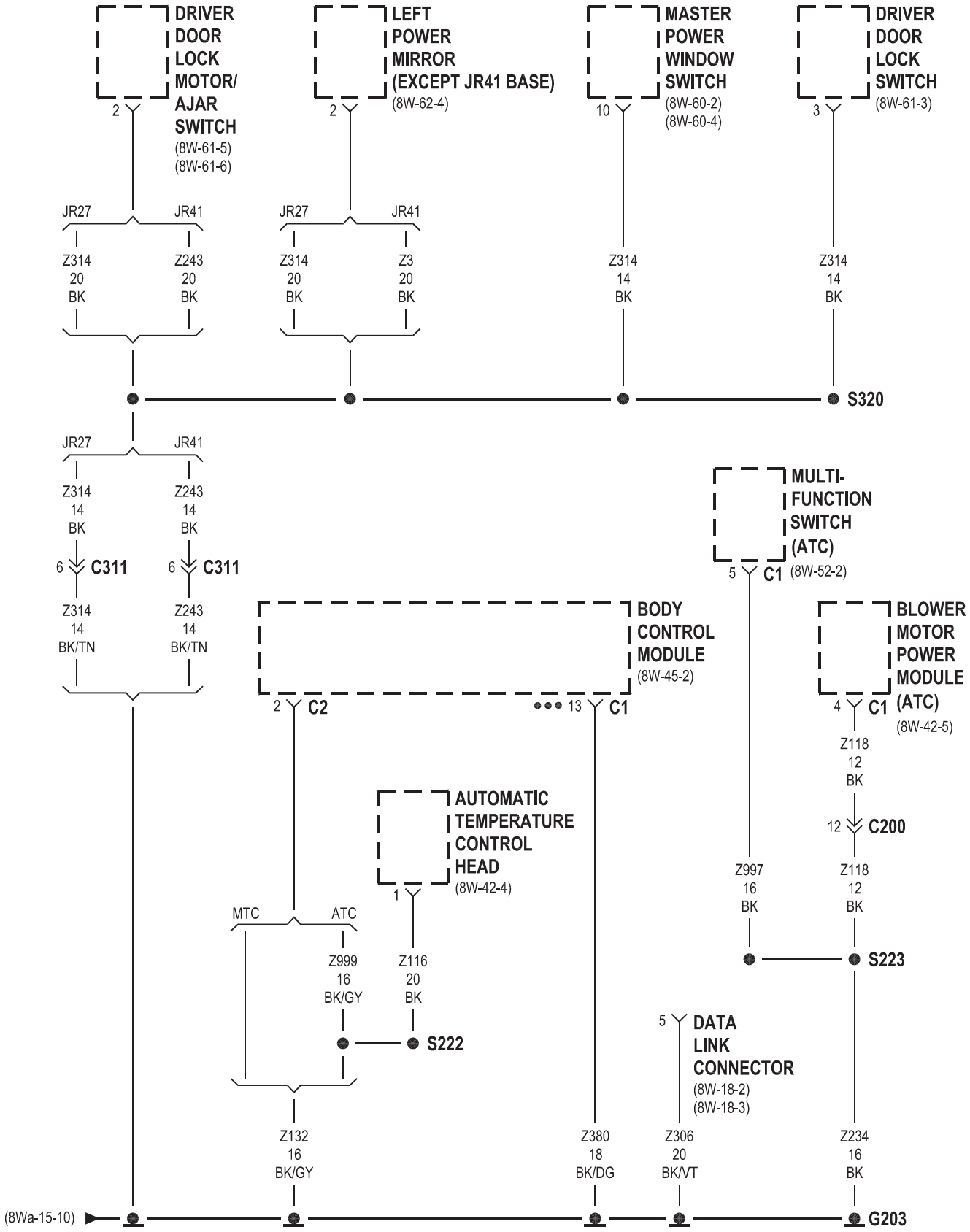
DRIVER DOOR LOCK MOTOR/ AJAR SWITCH
(8W-61-5)
(8W-61-6)
2
LEFT POWER MIRROR (EXCEPT JR41 BASE)
(8W-62-4)
2
MASTER POWER WINDOW SWITCH
(8W-60-2)
(8W-60-4)
10
DRIVER DOOR LOCK SWITCH
(8W-61-3)
3
JR27
JR41
Z314 20 BK
Z243 20 BK
Z314 20 BK
Z3 20 BK
Z314 14 BK
Z314 14 BK
S320
Z314 14 BK
Z243 14 BK
6 C311
6 C311
Z314 14 BK/TN
Z243 14 BK/TN
MULTI-FUNCTION SWITCH (ATC)
(8W-52-2)
5 C1
BODY CONTROL MODULE
(8W-45-2)
2 C2
13 C1
BLOWER MOTOR POWER MODULE (ATC)
(8W-42-5)
4 C1
Z118 12 BK
12 C200
AUTOMATIC TEMPERATURE CONTROL HEAD
(8W-42-4)
1
MTC
ATC
Z999 16 BK/GY
Z116 20 BK
S222
Z997 16 BK
Z118 12 BK
S223
5 DATA LINK CONNECTOR
(8W-18-2)
(8W-18-3)
Z132 16 BK/GY
Z380 18 BK/DG
Z306 20 BK/VT
Z234 16 BK
(8Wa-15-10)
G203

●●● EXCEPT BASE

JR27

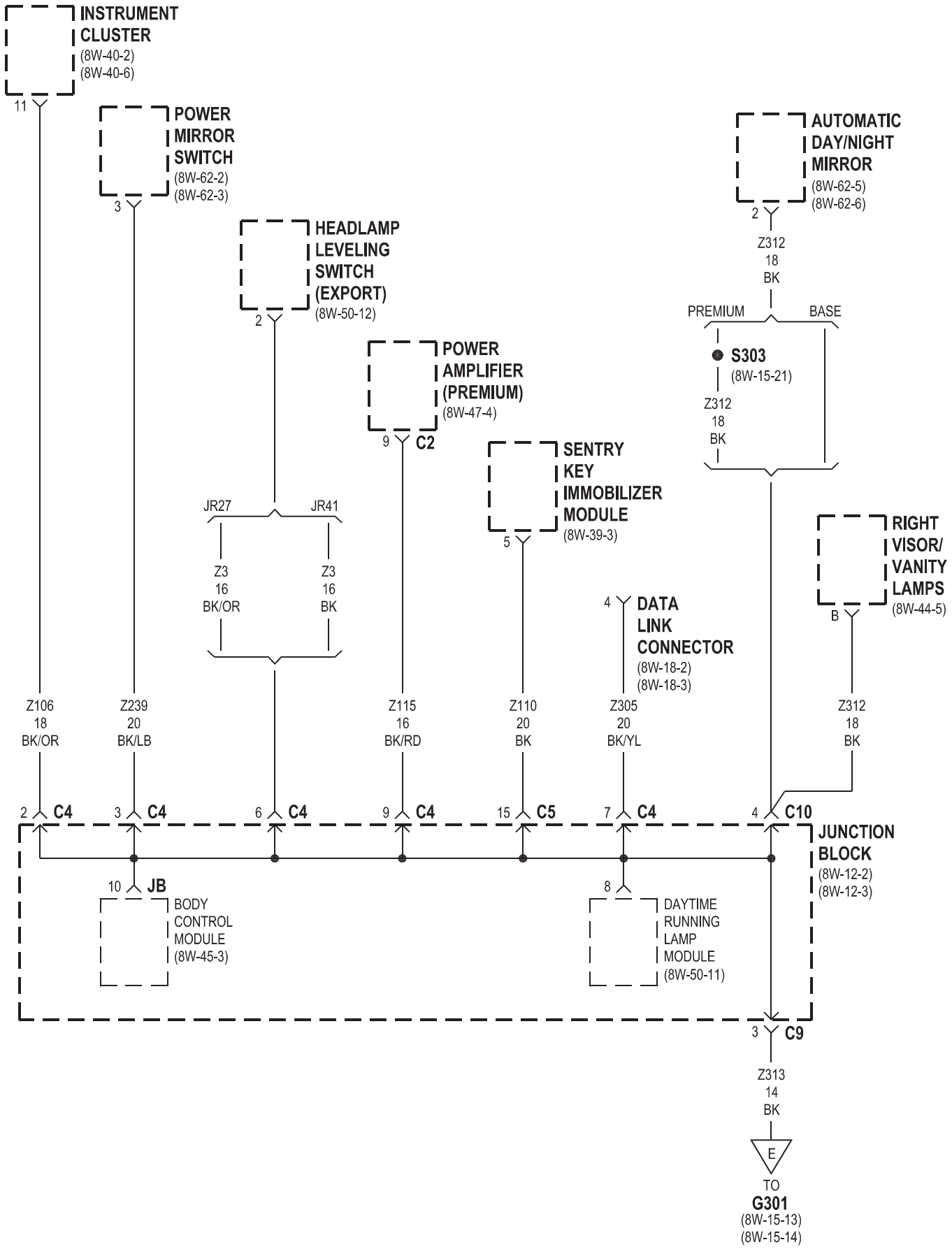
INSTRUMENT CLUSTER
(8W-40-2)
(8W-40-6)
11
POWER MIRROR SWITCH
(8W-62-2)
(8W-62-3)
3
HEADLAMP LEVELING SWITCH (EXPORT)
(8W-50-12)
2
POWER AMPLIFIER (PREMIUM)
(8W-47-4)
9 C2
SENTRY KEY IMMOBILIZER MODULE
(8W-39-3)
5
AUTOMATIC DAY/NIGHT MIRROR
(8W-62-5)
(8W-62-6)
2
Z312
18
BK
PREMIUM
BASE
S303
(8W-15-21)
Z312
18
BK
JR27
JR41
Z3
16
BK/OR
Z3
16
BK
RIGHT VISOR/ VANITY LAMPS
(8W-44-5)
B
4
DATA LINK CONNECTOR
(8W-18-2)
(8W-18-3)
Z106
18
BK/OR
Z239
20
BK/LB
Z115
16
BK/RD
Z110
20
BK
Z305
20
BK/YL
Z312
18
BK
2 C4
3 C4
6 C4
9 C4
15 C5
7 C4
4 C10
JUNCTION BLOCK
(8W-12-2)
(8W-12-3)
10 JB
BODY CONTROL MODULE
(8W-45-3)
8
DAYTIME RUNNING LAMP MODULE
(8W-50-11)
3 C9
Z313
14
BK
E
TO
G301
(8W-15-13)
(8W-15-14)

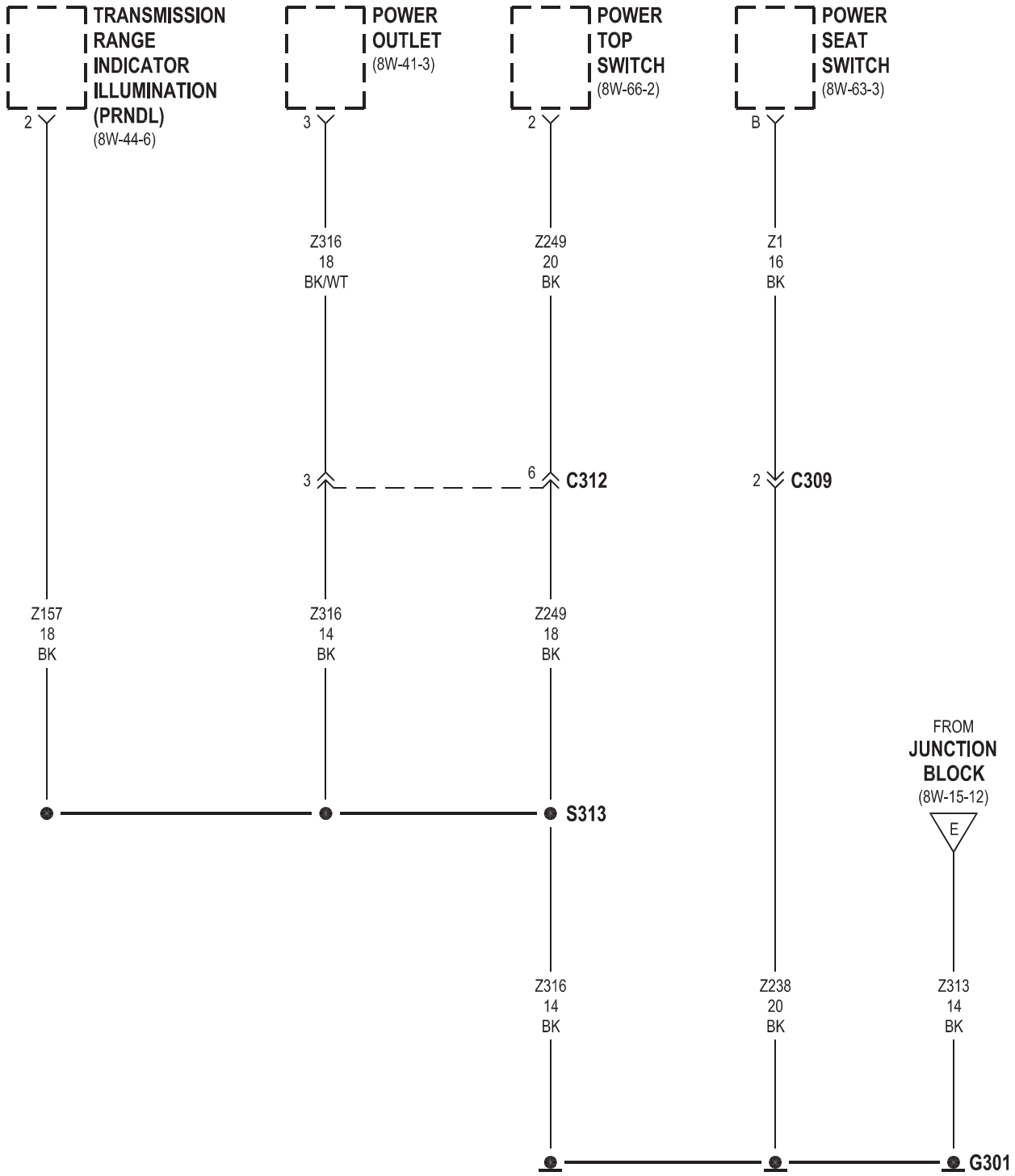
TRANSMISSION RANGE INDICATOR ILLUMINATION (PRNDL)
(8W-44-6)
POWER OUTLET
(8W-41-3)
POWER TOP SWITCH
(8W-66-2)
POWER SEAT SWITCH
(8W-63-3)
2
3
2
B
Z316
18
BK/WT
Z249
20
BK
Z1
16
BK
3
6
C312
2
C309
Z157
18
BK
Z316
14
BK
Z249
18
BK
S313
FROM
JUNCTION BLOCK
(8W-15-12)
E
Z316
14
BK
Z238
20
BK
Z313
14
BK
G301

JR27 PREMIUM

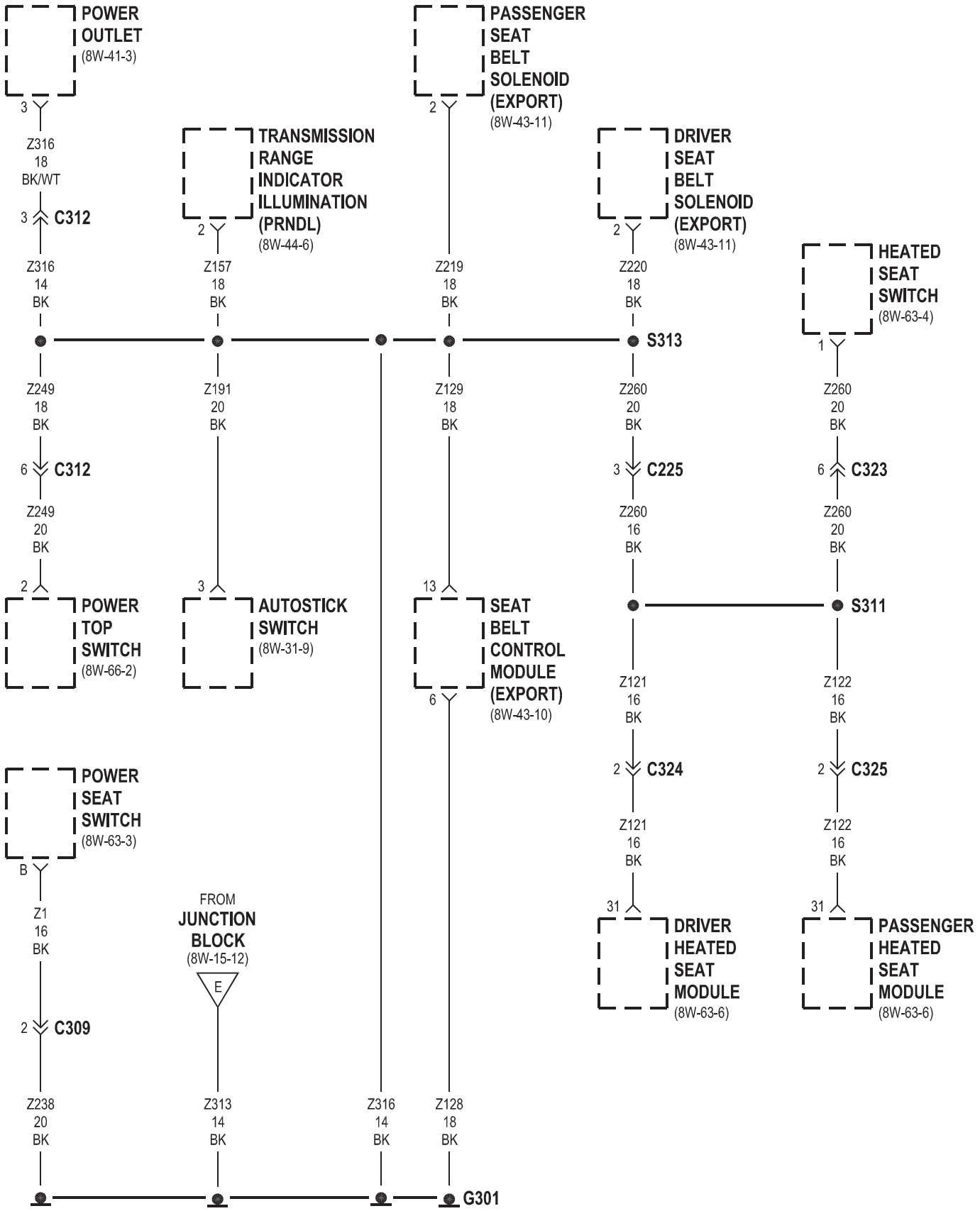

JR27

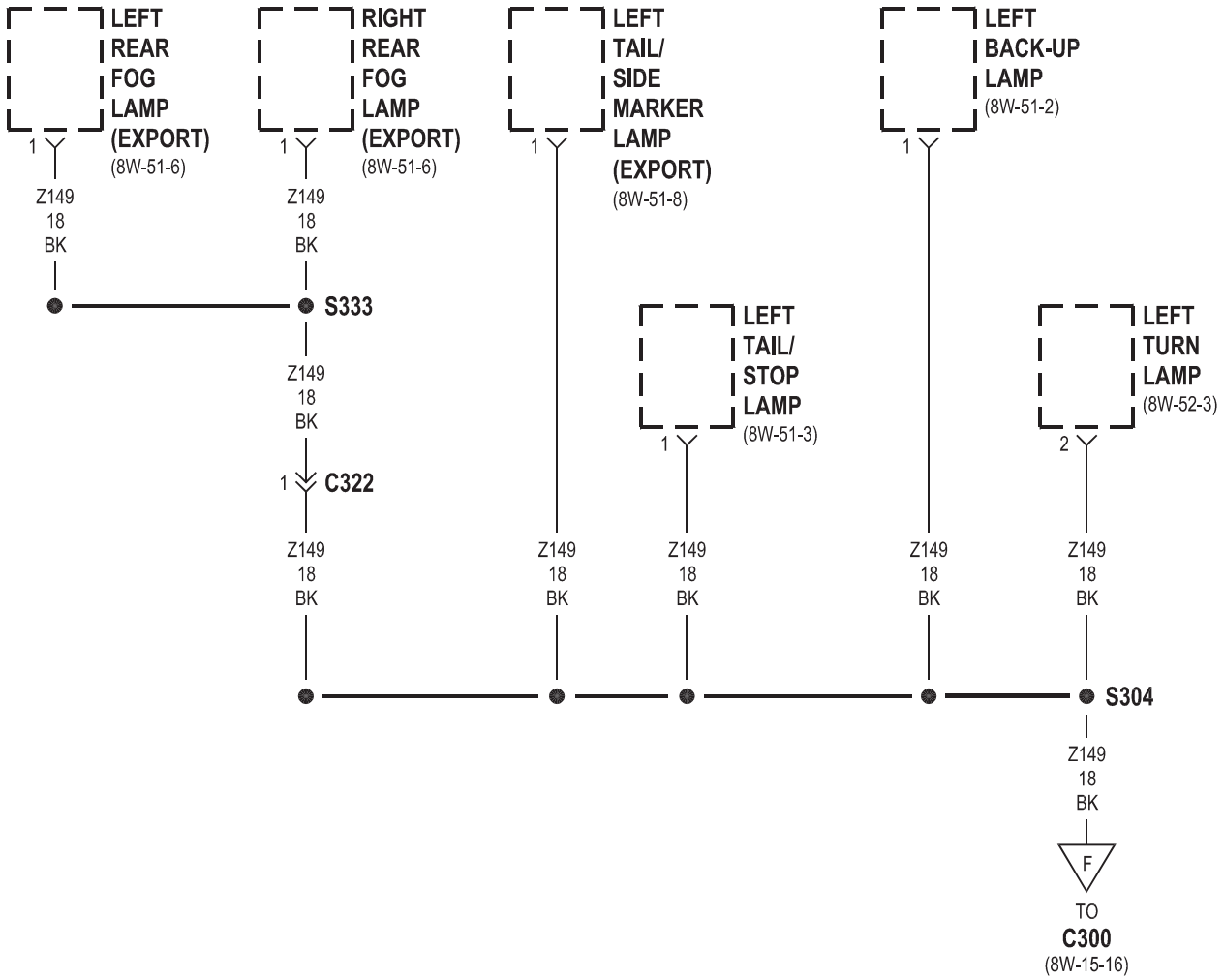
LEFT REAR FOG LAMP (EXPORT) (8W-51-6)
RIGHT REAR FOG LAMP (EXPORT) (8W-51-6)
LEFT TAIL/ SIDE MARKER LAMP (EXPORT) (8W-51-8)
LEFT BACK-UP LAMP (8W-51-2)
1
Z149 18 BK
S333
Z149 18 BK
1
C322
Z149 18 BK
LEFT TAIL/ STOP LAMP (8W-51-3)
LEFT TURN LAMP (8W-52-3)
2
S304
F
TO
C300
(8W-15-16)

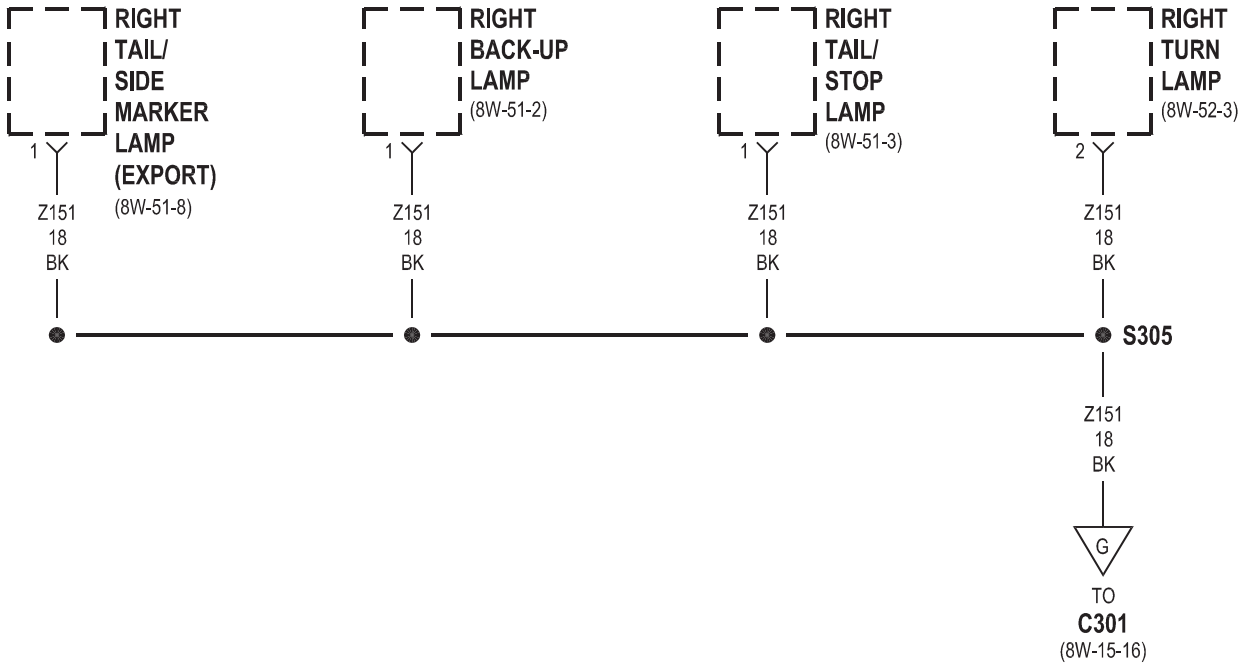
RIGHT TAIL/ SIDE MARKER LAMP (EXPORT) (8W-51-8)
RIGHT BACK-UP LAMP (8W-51-2)
RIGHT TAIL/ STOP LAMP (8W-51-3)
RIGHT TURN LAMP (8W-52-3)
1
2
Z151 18 BK
S305
G
TO
C301
(8W-15-16)

JR27

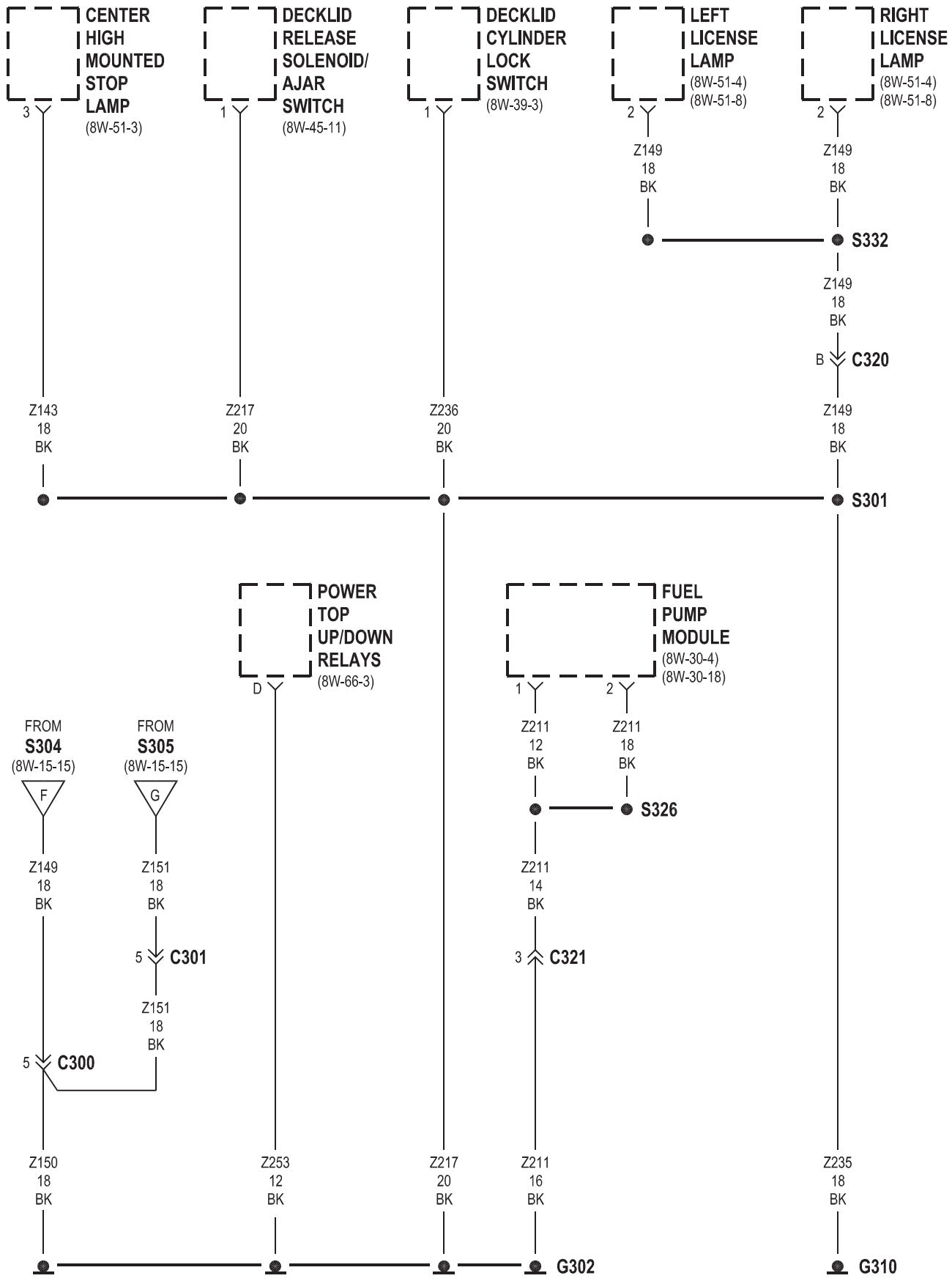
CENTER HIGH MOUNTED STOP LAMP (8W-51-3)
DECKLID RELEASE SOLENOID/ AJAR SWITCH (8W-45-11)
DECKLID CYLINDER LOCK SWITCH (8W-39-3)
LEFT LICENSE LAMP (8W-51-4) (8W-51-8)
RIGHT LICENSE LAMP (8W-51-4) (8W-51-8)
3
1
1
2
2
Z149 18 BK
Z149 18 BK
S332
Z149 18 BK
B
C320
Z143 18 BK
Z217 20 BK
Z236 20 BK
Z149 18 BK
S301
POWER TOP UP/DOWN RELAYS (8W-66-3)
FUEL PUMP MODULE (8W-30-4) (8W-30-18)
D
1
2
FROM S304 (8W-15-15)
FROM S305 (8W-15-15)
F
G
Z211 12 BK
Z211 18 BK
S326
Z149 18 BK
Z151 18 BK
Z211 14 BK
5
C301
3
C321
Z151 18 BK
5
C300
Z150 18 BK
Z253 12 BK
Z217 20 BK
Z211 16 BK
Z235 18 BK
G302
G310

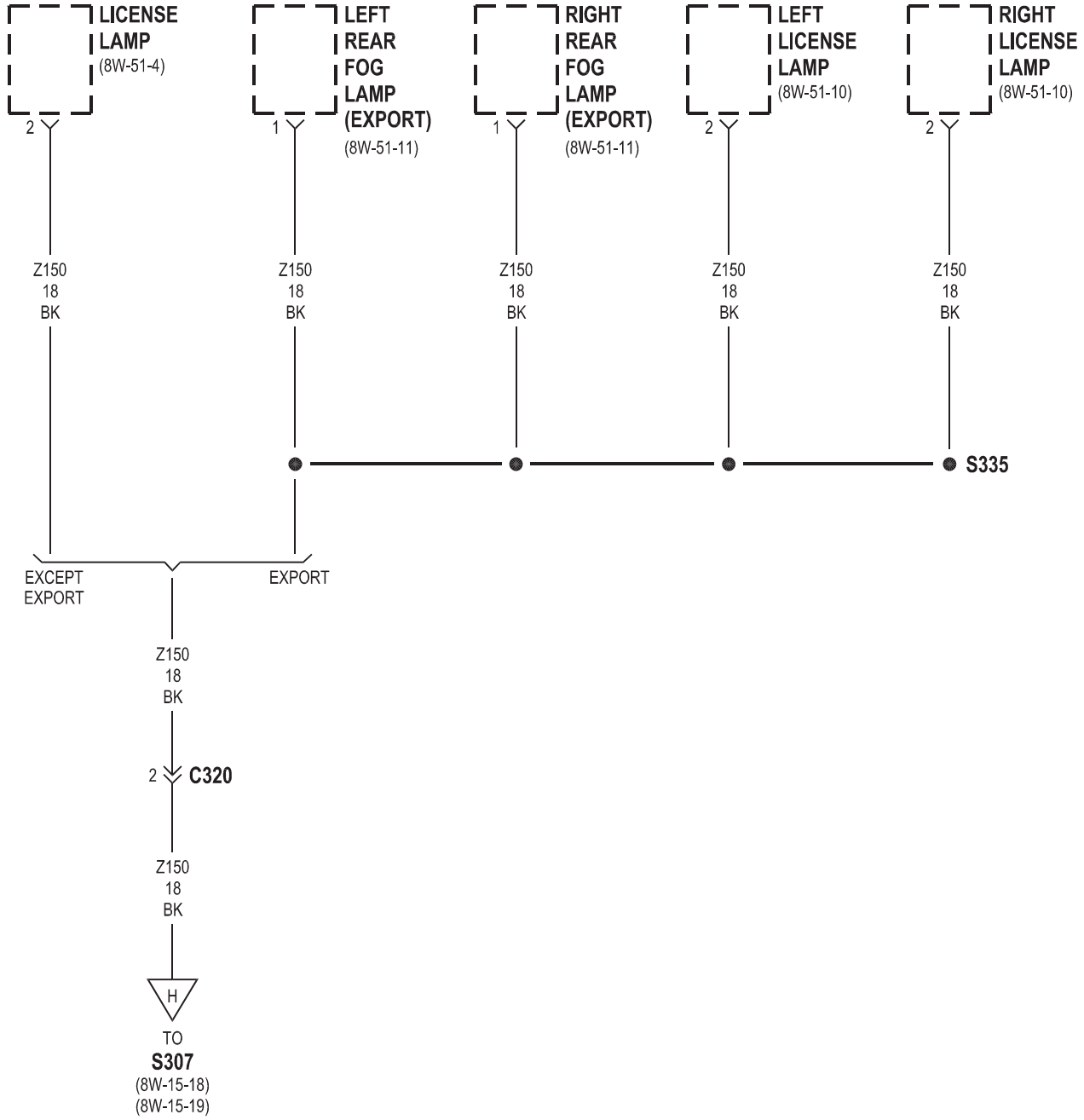
LICENSE LAMP (8W-51-4)
LEFT REAR FOG LAMP (EXPORT) (8W-51-11)
RIGHT REAR FOG LAMP (EXPORT) (8W-51-11)
LEFT LICENSE LAMP (8W-51-10)
RIGHT LICENSE LAMP (8W-51-10)
2
1
1
2
2
Z150 18 BK
Z150 18 BK
Z150 18 BK
Z150 18 BK
Z150 18 BK
S335
EXCEPT EXPORT
EXPORT
Z150 18 BK
2
C320
Z150 18 BK
H
TO
S307
(8W-15-18)
(8W-15-19)

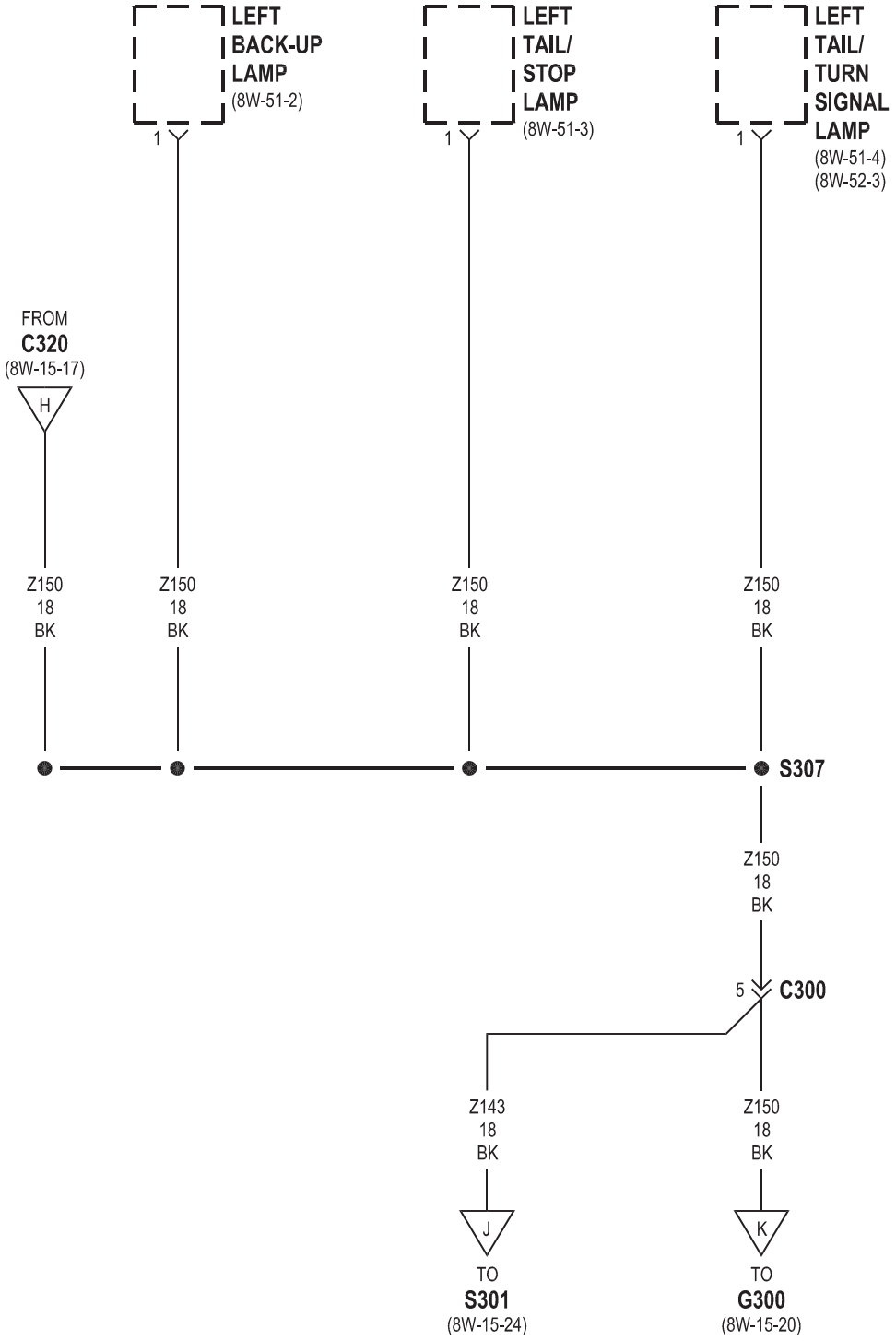
LEFT BACK-UP LAMP (8W-51-2)
LEFT TAIL/ STOP LAMP (8W-51-3)
LEFT TAIL/ TURN SIGNAL LAMP (8W-51-4) (8W-52-3)
1
1
1
FROM C320 (8W-15-17)
H
Z150 18 BK
Z150 18 BK
Z150 18 BK
Z150 18 BK
S307
Z150 18 BK
5
C300
Z143 18 BK
Z150 18 BK
J
K
TO S301 (8W-15-24)
TO G300 (8W-15-20)

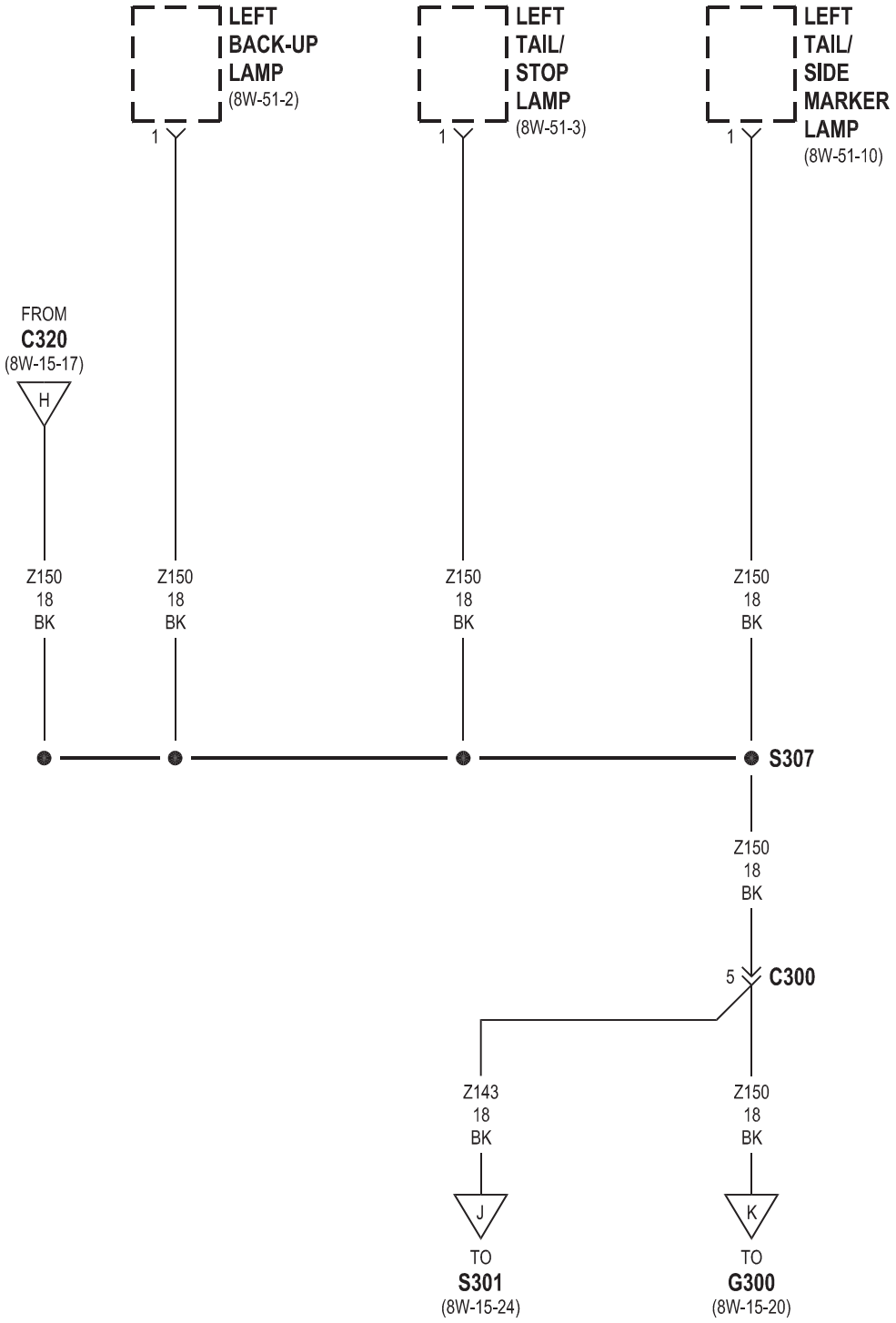
LEFT BACK-UP LAMP (8W-51-2)
LEFT TAIL/ STOP LAMP (8W-51-3)
LEFT TAIL/ SIDE MARKER LAMP (8W-51-10)
1
1
1
FROM C320 (8W-15-17)
H
Z150 18 BK
Z150 18 BK
Z150 18 BK
Z150 18 BK
S307
Z150 18 BK
5
C300
Z143 18 BK
Z150 18 BK
J
K
TO S301 (8W-15-24)
TO G300 (8W-15-20)

JR41

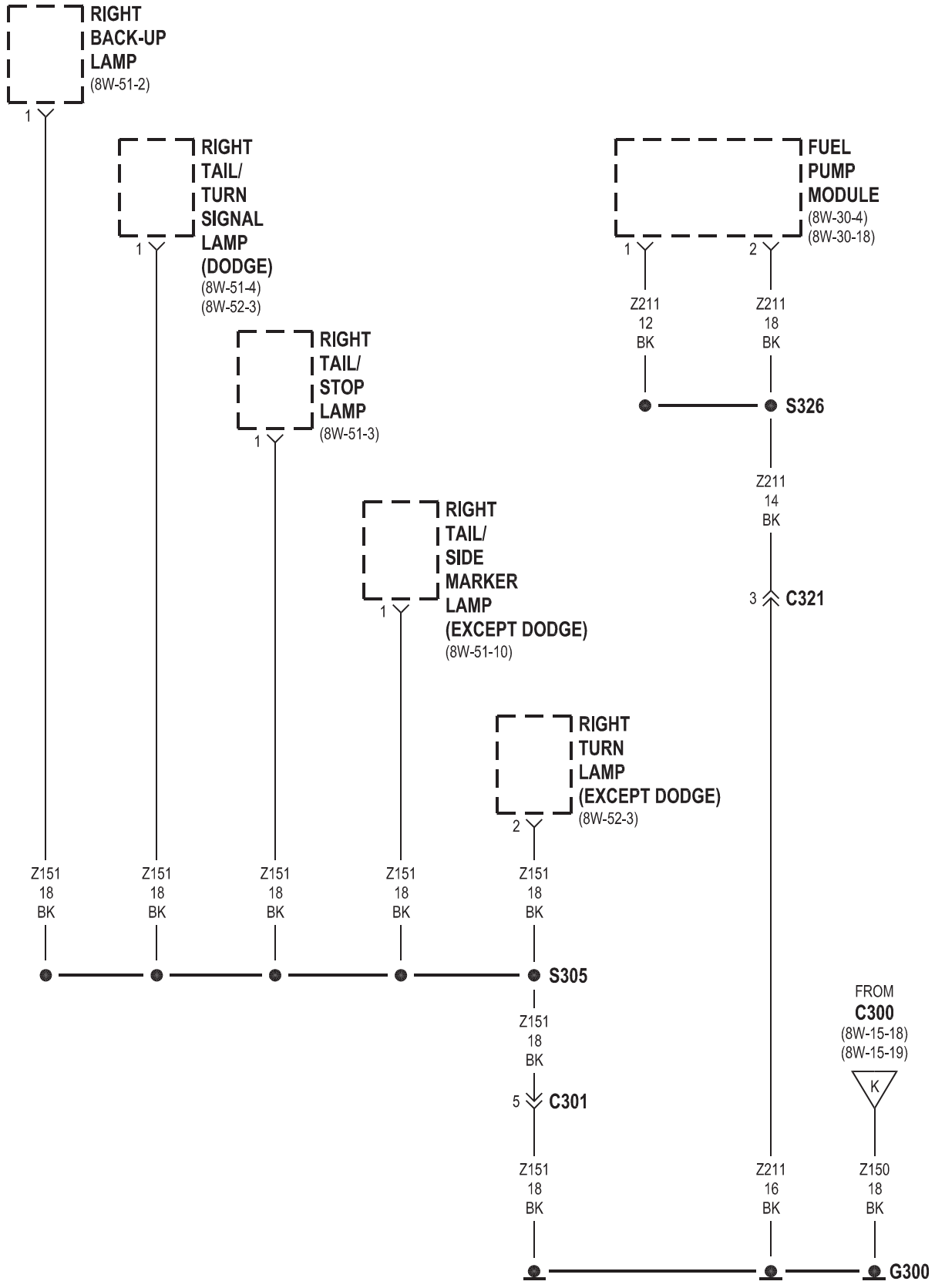
RIGHT BACK-UP LAMP (8W-51-2)
1
RIGHT TAIL/ TURN SIGNAL LAMP (DODGE) (8W-51-4) (8W-52-3)
1
RIGHT TAIL/ STOP LAMP (8W-51-3)
1
RIGHT TAIL/ SIDE MARKER LAMP (EXCEPT DODGE) (8W-51-10)
1
RIGHT TURN LAMP (EXCEPT DODGE) (8W-52-3)
2
FUEL PUMP MODULE (8W-30-4) (8W-30-18)
1
2
Z211 12 BK
Z211 18 BK
S326
Z211 14 BK
3
C321
Z151 18 BK
Z151 18 BK
Z151 18 BK
Z151 18 BK
Z151 18 BK
S305
Z151 18 BK
5
C301
Z151 18 BK
Z211 16 BK
FROM C300 (8W-15-18) (8W-15-19)
K
Z150 18 BK
G300

JR41

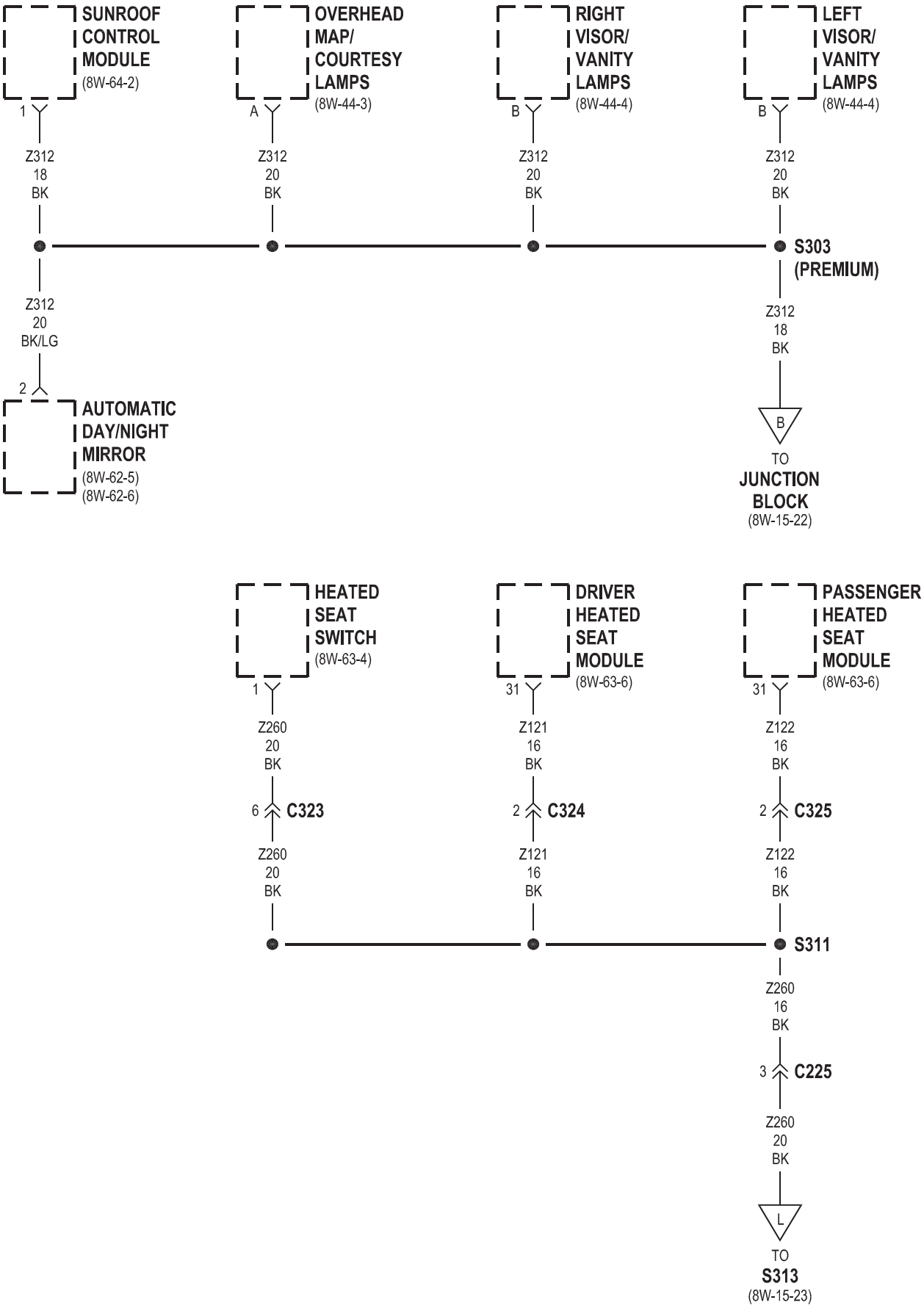
SUNROOF CONTROL MODULE (8W-64-2)
1
Z312 18 BK
OVERHEAD MAP/ COURTESY LAMPS (8W-44-3)
A
Z312 20 BK
RIGHT VISOR/ VANITY LAMPS (8W-44-4)
B
Z312 20 BK
LEFT VISOR/ VANITY LAMPS (8W-44-4)
B
Z312 20 BK
S303 (PREMIUM)
Z312 20 BK/LG
2
AUTOMATIC DAY/NIGHT MIRROR (8W-62-5) (8W-62-6)
Z312 18 BK
B
TO JUNCTION BLOCK (8W-15-22)
HEATED SEAT SWITCH (8W-63-4)
1
Z260 20 BK
6 C323
Z260 20 BK
DRIVER HEATED SEAT MODULE (8W-63-6)
31
Z121 16 BK
2 C324
Z121 16 BK
PASSENGER HEATED SEAT MODULE (8W-63-6)
31
Z122 16 BK
2 C325
Z122 16 BK
S311
Z260 16 BK
3 C225
Z260 20 BK
L
TO S313 (8W-15-23)

JR41

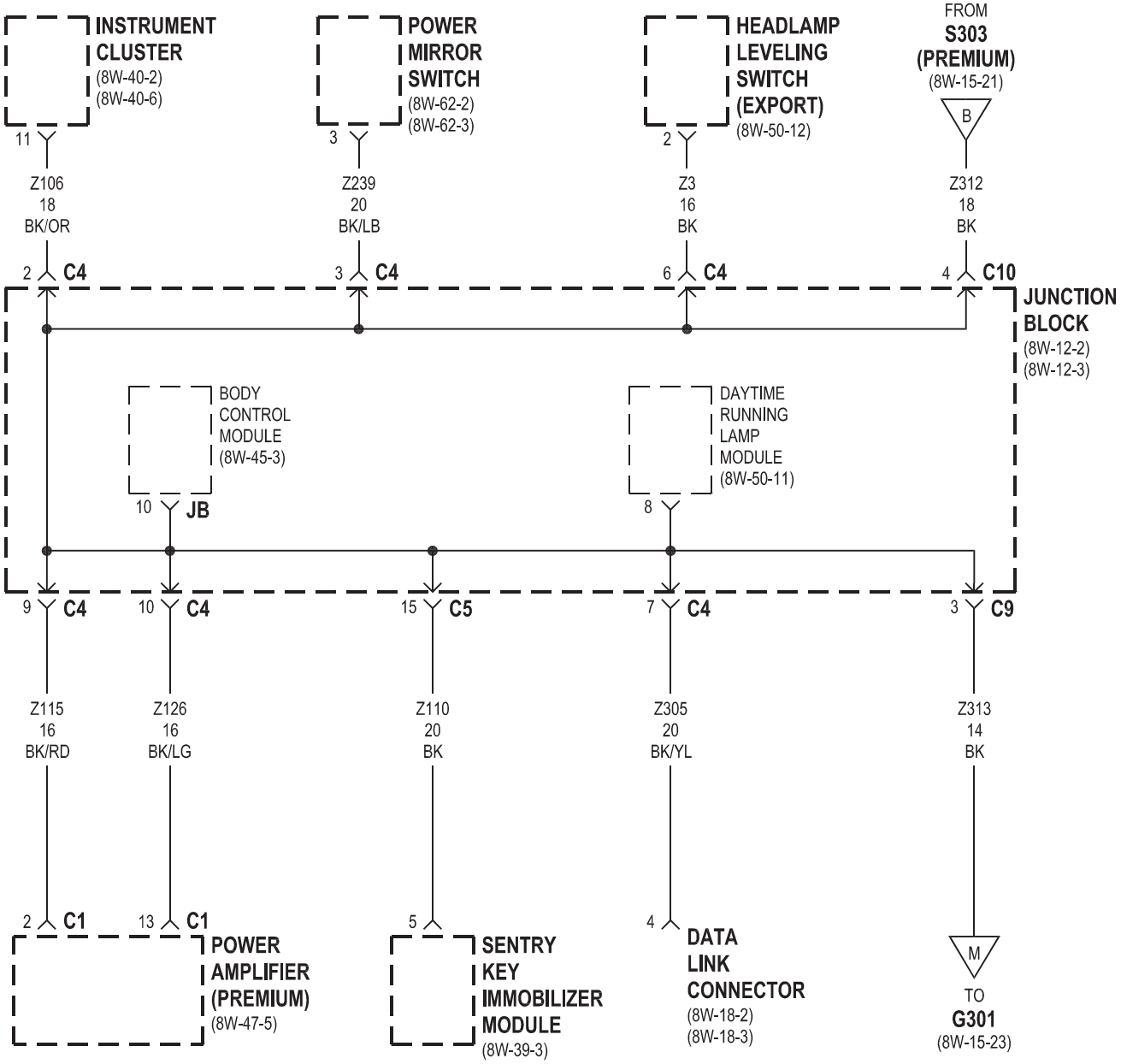
INSTRUMENT CLUSTER
(8W-40-2)
(8W-40-6)
POWER MIRROR SWITCH
(8W-62-2)
(8W-62-3)
HEADLAMP LEVELING SWITCH (EXPORT)
(8W-50-12)
FROM
S303
(PREMIUM)
(8W-15-21)
B
11
3
2
Z106
18
BK/OR
Z239
20
BK/LB
Z3
16
BK
Z312
18
BK
2 C4
3 C4
6 C4
4 C10
JUNCTION BLOCK
(8W-12-2)
(8W-12-3)
BODY CONTROL MODULE
(8W-45-3)
DAYTIME RUNNING LAMP MODULE
(8W-50-11)
10 JB
8
9 C4
10 C4
15 C5
7 C4
3 C9
Z115
16
BK/RD
Z126
16
BK/LG
Z110
20
BK
Z305
20
BK/YL
Z313
14
BK
2 C1
13 C1
5
4
POWER AMPLIFIER (PREMIUM)
(8W-47-5)
SENTRY KEY IMMOBILIZER MODULE
(8W-39-3)
DATA LINK CONNECTOR
(8W-18-2)
(8W-18-3)
M
TO
G301
(8W-15-23)

JR41

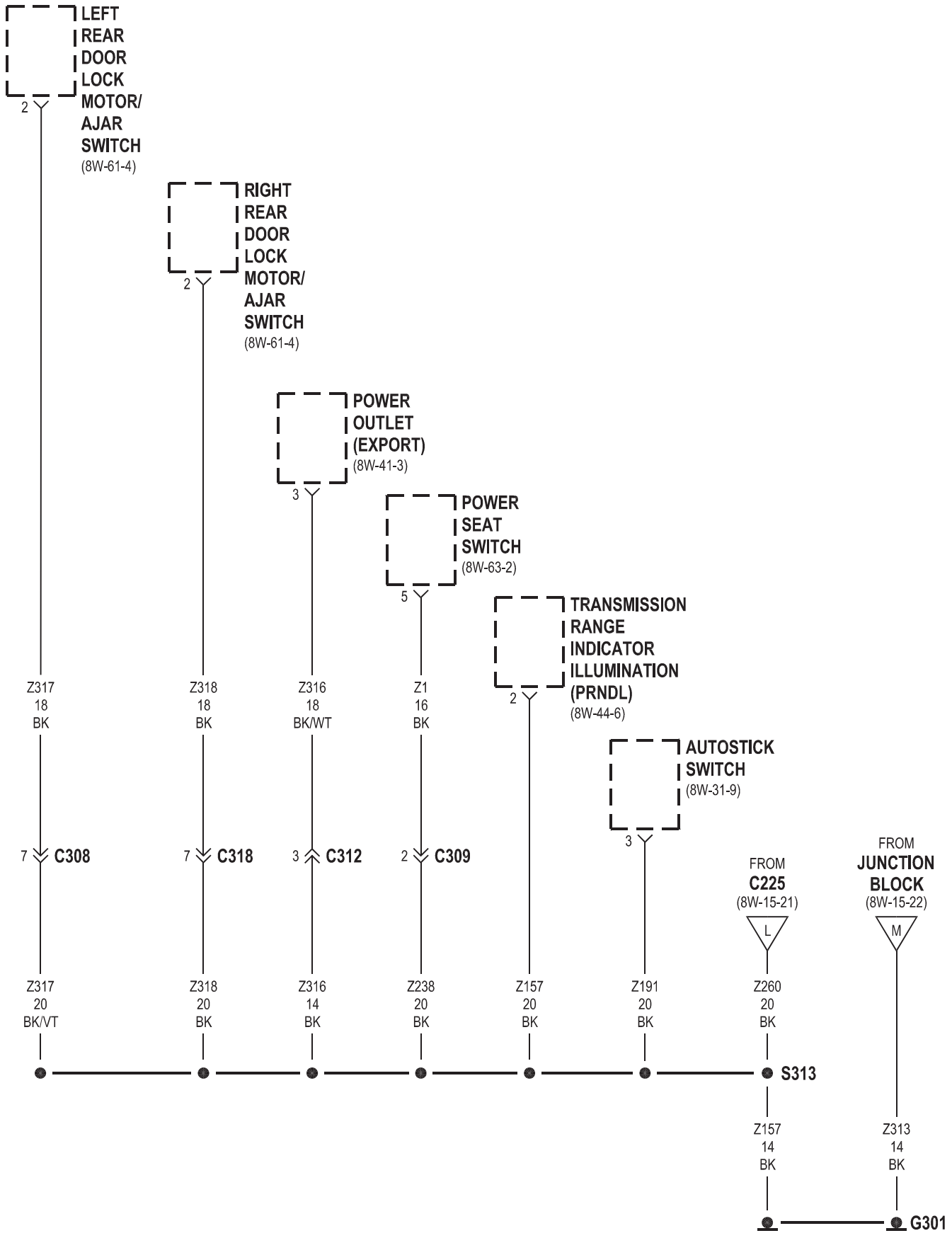
LEFT REAR DOOR LOCK MOTOR/ AJAR SWITCH (8W-61-4)
2
RIGHT REAR DOOR LOCK MOTOR/ AJAR SWITCH (8W-61-4)
2
POWER OUTLET (EXPORT) (8W-41-3)
3
POWER SEAT SWITCH (8W-63-2)
5
TRANSMISSION RANGE INDICATOR ILLUMINATION (PRNDL) (8W-44-6)
2
AUTOSTICK SWITCH (8W-31-9)
3
Z317 18 BK
Z318 18 BK
Z316 18 BK/WT
Z1 16 BK
7 C308
7 C318
3 C312
2 C309
FROM C225 (8W-15-21)
L
FROM JUNCTION BLOCK (8W-15-22)
M
Z317 20 BK/VT
Z318 20 BK
Z316 14 BK
Z238 20 BK
Z157 20 BK
Z191 20 BK
Z260 20 BK
S313
Z157 14 BK
Z313 14 BK
G301

JR41

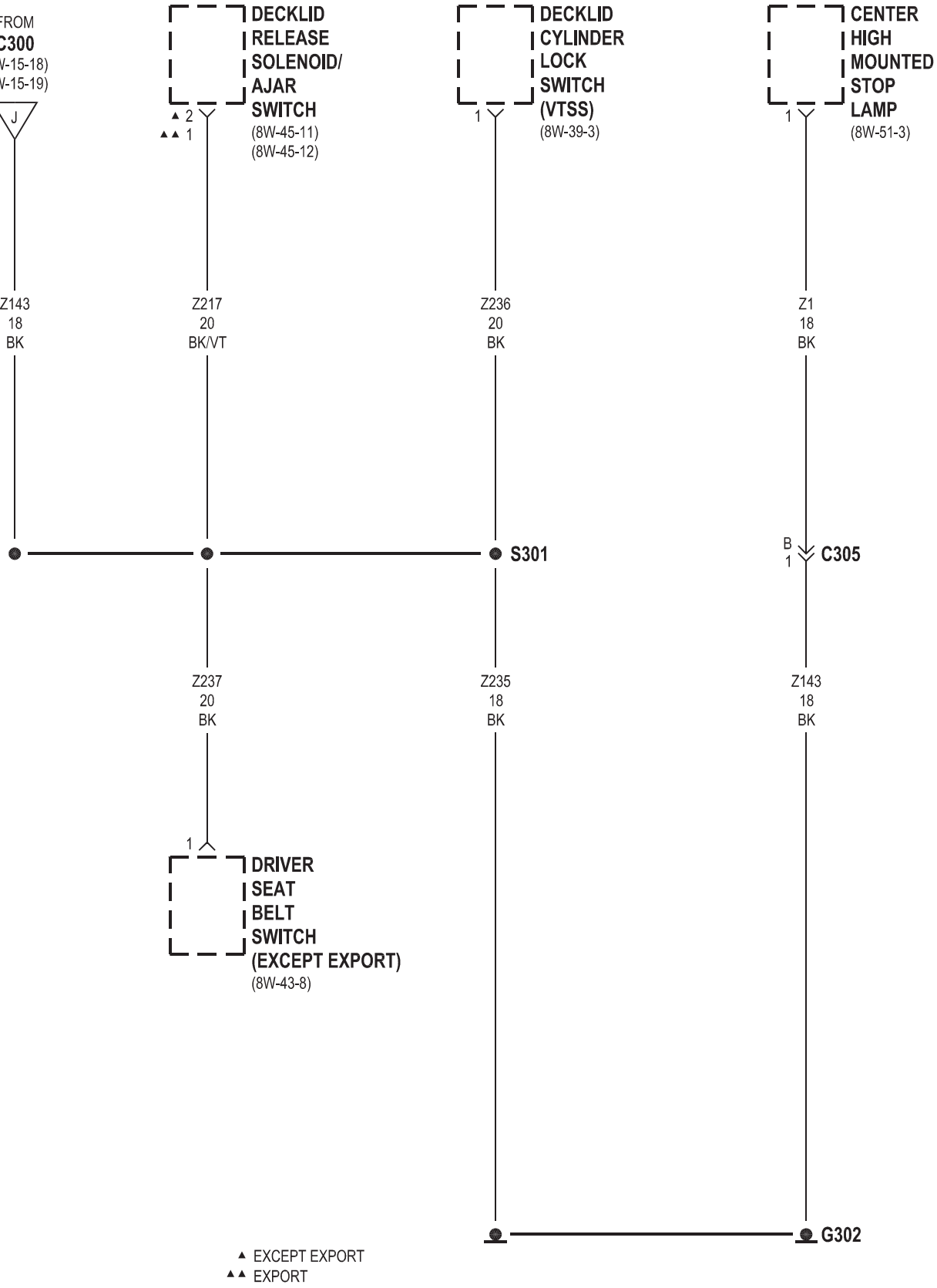
FROM
C300
(8W-15-18)
(8W-15-19)
J
DECKLID RELEASE SOLENOID/ AJAR SWITCH
(8W-45-11)
(8W-45-12)
▲ 2
▲▲ 1
DECKLID CYLINDER LOCK SWITCH (VTSS)
(8W-39-3)
1
CENTER HIGH MOUNTED STOP LAMP
(8W-51-3)
1
Z143
18
BK
Z217
20
BK/VT
Z236
20
BK
Z1
18
BK
S301
B
1
C305
Z237
20
BK
Z235
18
BK
Z143
18
BK
1
DRIVER SEAT BELT SWITCH (EXCEPT EXPORT)
(8W-43-8)
G302
▲ EXCEPT EXPORT
▲▲ EXPORT

8W-18 BUS COMMUNICATIONS

Component	Page
Airbag Control Module	8W-18-4
Automatic Temperature Control Head	8W-18-4
Body Control Module	8W-18-2, 3, 4
CD Changer	8W-18-4
Compass/Mini-Trip Computer	8W-18-4
Controller Antilock Brake	8W-18-4
Data Link Connector	8W-18-2, 3
Fuse 5	8W-18-2, 3
Fuse 11	8W-18-2, 3
G203	8W-18-2, 3
G301	8W-18-2, 3
Instrument Cluster	8W-18-4
Junction Block	8W-18-2, 3
Powertrain Control Module	8W-18-2, 3
Radio	8W-18-4
Sentry Key Immobilizer Module	8W-18-4
Transmission Control Module	8W-18-3, 4

2.0L/2.4L

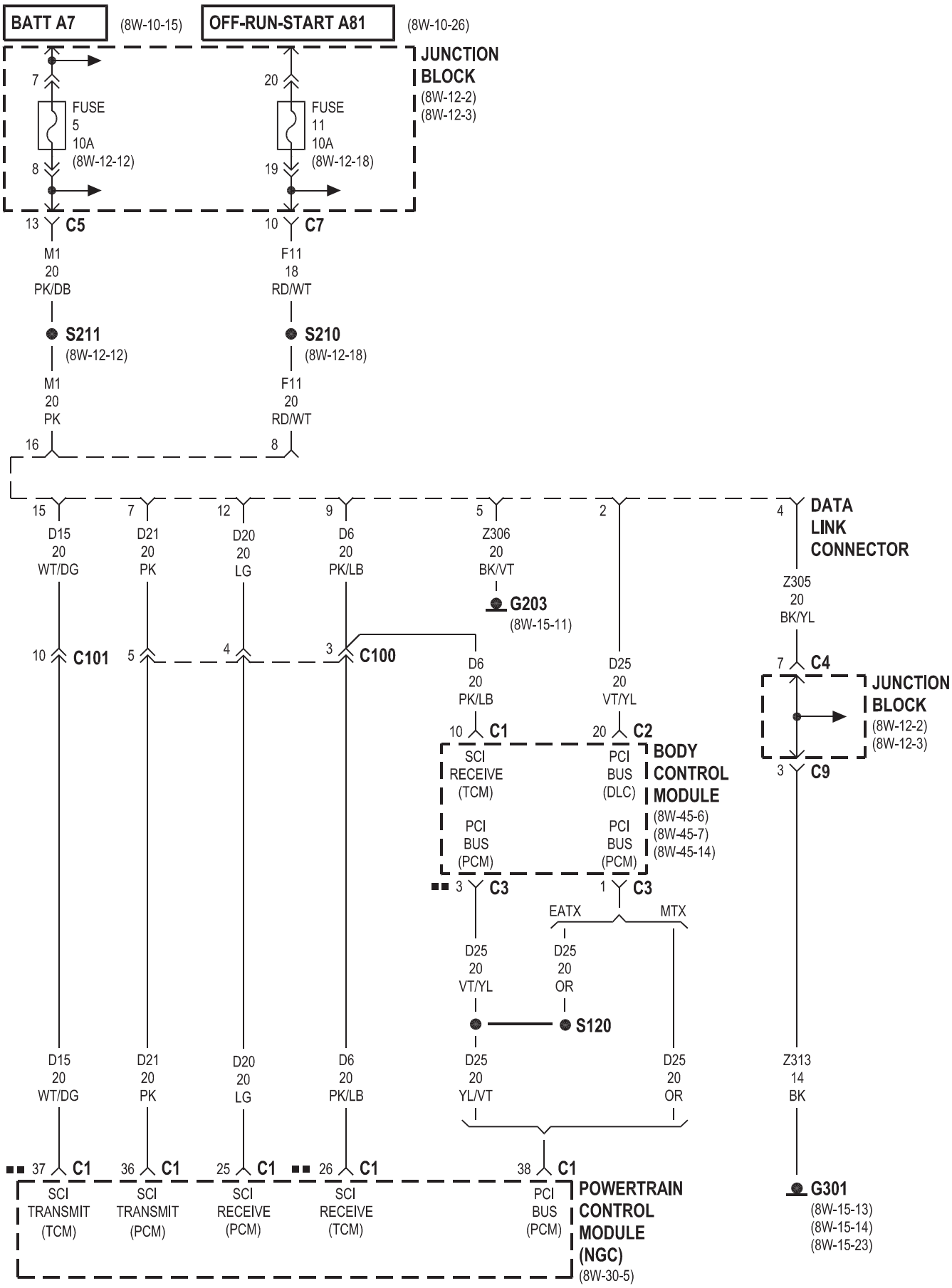
BATT A7
(8W-10-15)
OFF-RUN-START A81
(8W-10-26)
JUNCTION BLOCK
(8W-12-2)
(8W-12-3)
7
FUSE 5 10A
(8W-12-12)
8
20
FUSE 11 10A
(8W-12-18)
19
13 C5
10 C7
M1 20 PK/DB
F11 18 RD/WT
S211
(8W-12-12)
S210
(8W-12-18)
M1 20 PK
F11 20 RD/WT
16
8
15 D15 20 WT/DG
7 D21 20 PK
12 D20 20 LG
9 D6 20 PK/LB
5 Z306 20 BK/VT
2
4 DATA LINK CONNECTOR
G203
(8W-15-11)
Z305 20 BK/YL
10 C101
5
4
3 C100
D6 20 PK/LB
D25 20 VT/YL
7 C4
JUNCTION BLOCK
(8W-12-2)
(8W-12-3)
10 C1
20 C2
SCI RECEIVE (TCM)
PCI BUS (DLC)
BODY CONTROL MODULE
(8W-45-6)
(8W-45-7)
(8W-45-14)
PCI BUS (PCM)
PCI BUS (PCM)
3 C9
3 C3
1 C3
EATX
MTX
D25 20 VT/YL
D25 20 OR
S120
D15 20 WT/DG
D21 20 PK
D20 20 LG
D6 20 PK/LB
D25 20 YL/VT
D25 20 OR
Z313 14 BK
37 C1
36 C1
25 C1
26 C1
38 C1
SCI TRANSMIT (TCM)
SCI TRANSMIT (PCM)
SCI RECEIVE (PCM)
SCI RECEIVE (TCM)
PCI BUS (PCM)
POWERTRAIN CONTROL MODULE (NGC)
(8W-30-5)
G301
(8W-15-13)
(8W-15-14)
(8W-15-23)
EATX

2.7L

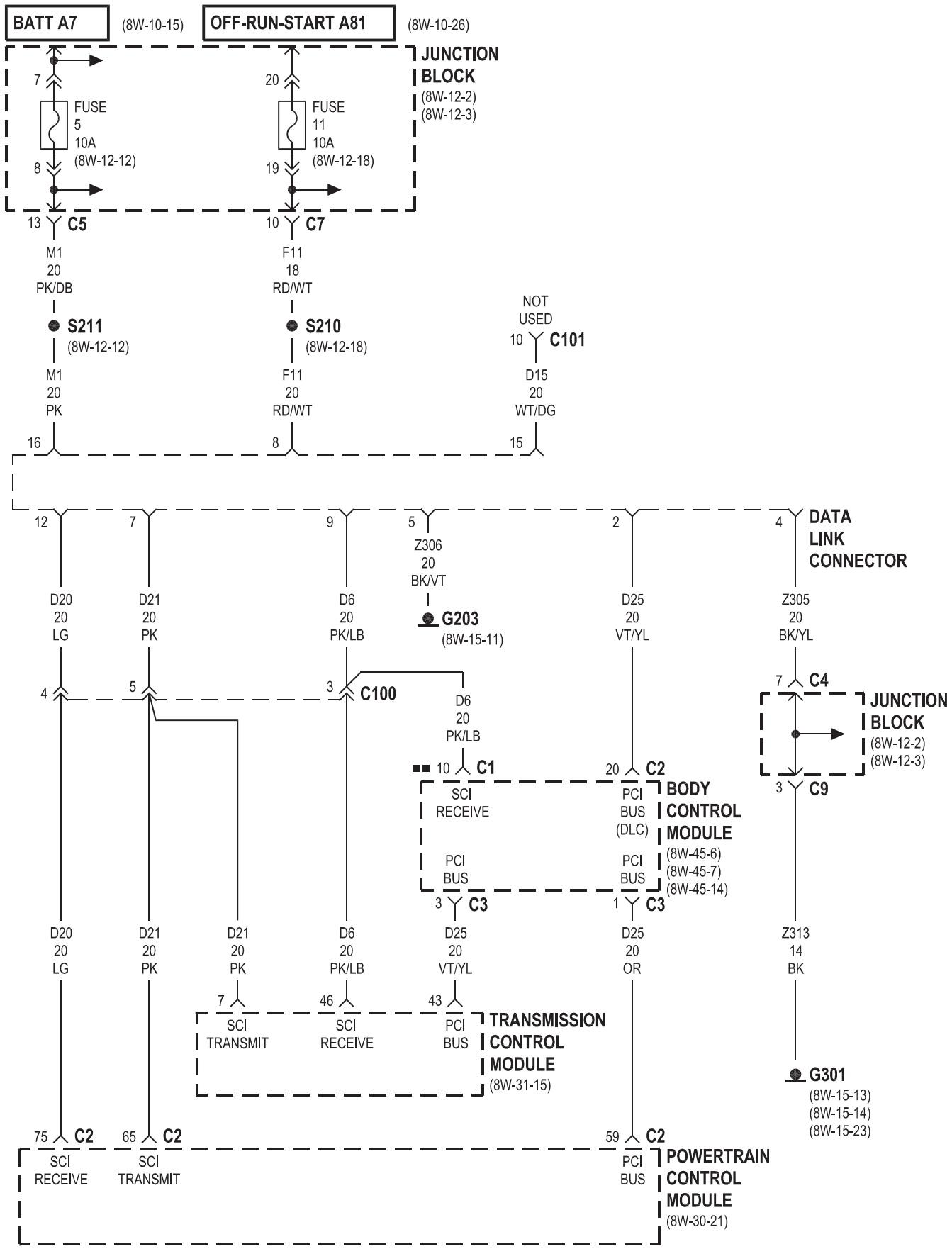
BATT A7
(8W-10-15)
OFF-RUN-START A81
(8W-10-26)
JUNCTION BLOCK
(8W-12-2)
(8W-12-3)
7
FUSE 5 10A
(8W-12-12)
8
20
FUSE 11 10A
(8W-12-18)
19
13 C5
10 C7
M1 20 PK/DB
S211
(8W-12-12)
M1 20 PK
F11 18 RD/WT
S210
(8W-12-18)
F11 20 RD/WT
NOT USED
10 C101
D15 20 WT/DG
16
8
15
12
7
9
5
2
4
DATA LINK CONNECTOR
Z306 20 BK/VT
G203
(8W-15-11)
D20 20 LG
D21 20 PK
D6 20 PK/LB
D25 20 VT/YL
Z305 20 BK/YL
4
5
3 C100
D6 20 PK/LB
7 C4
JUNCTION BLOCK
(8W-12-2)
(8W-12-3)
10 C1
20 C2
3 C9
SCI RECEIVE
PCI BUS (DLC)
BODY CONTROL MODULE
(8W-45-6)
(8W-45-7)
(8W-45-14)
PCI BUS
PCI BUS
3 C3
1 C3
D20 20 LG
D21 20 PK
D21 20 PK
D6 20 PK/LB
D25 20 VT/YL
D25 20 OR
Z313 14 BK
7
46
43
SCI TRANSMIT
SCI RECEIVE
PCI BUS
TRANSMISSION CONTROL MODULE
(8W-31-15)
G301
(8W-15-13)
(8W-15-14)
(8W-15-23)
75 C2
65 C2
59 C2
SCI RECEIVE
SCI TRANSMIT
PCI BUS
POWERTRAIN CONTROL MODULE
(8W-30-21)
EATX

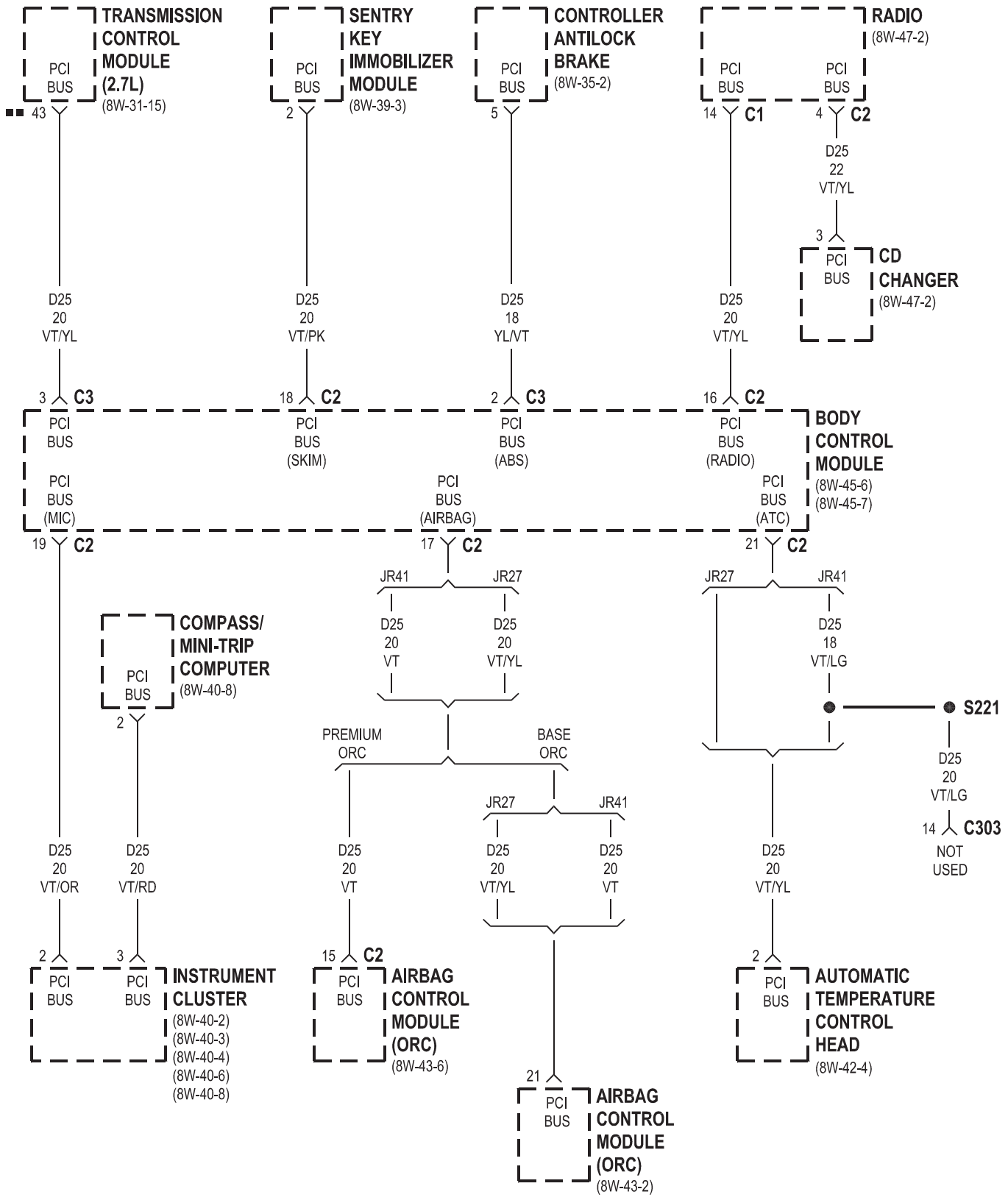
TRANSMISSION CONTROL MODULE (2.7L)
(8W-31-15)
PCI BUS
43
D25 20 VT/YL
3 C3
SENTRY KEY IMMOBILIZER MODULE
(8W-39-3)
PCI BUS
2
D25 20 VT/PK
18 C2
CONTROLLER ANTILOCK BRAKE
(8W-35-2)
PCI BUS
5
D25 18 YL/VT
2 C3
RADIO
(8W-47-2)
PCI BUS
14 C1
PCI BUS
4 C2
D25 22 VT/YL
3
PCI BUS
CD CHANGER
(8W-47-2)
D25 20 VT/YL
16 C2
BODY CONTROL MODULE
(8W-45-6)
(8W-45-7)
PCI BUS
PCI BUS (SKIM)
PCI BUS (ABS)
PCI BUS (RADIO)
PCI BUS (MIC)
PCI BUS (AIRBAG)
PCI BUS (ATC)
19 C2
17 C2
21 C2
JR41
JR27
D25 20 VT
D25 20 VT/YL
JR27
JR41
D25 18 VT/LG
S221
D25 20 VT/LG
14 C303
NOT USED
COMPASS/ MINI-TRIP COMPUTER
(8W-40-8)
PCI BUS
2
PREMIUM ORC
BASE ORC
JR27
JR41
D25 20 VT/OR
D25 20 VT/RD
D25 20 VT
D25 20 VT/YL
D25 20 VT
D25 20 VT/YL
2
3
INSTRUMENT CLUSTER
(8W-40-2)
(8W-40-3)
(8W-40-4)
(8W-40-6)
(8W-40-8)
15 C2
AIRBAG CONTROL MODULE (ORC)
(8W-43-6)
21
AIRBAG CONTROL MODULE (ORC)
(8W-43-2)
2
AUTOMATIC TEMPERATURE CONTROL HEAD
(8W-42-4)

■■ EATX

8W-20 CHARGING SYSTEM

Component	Page
Auto Shut Down Relay	8W-20-2, 3
Battery	8W-20-2, 3
Fuse 14	8W-20-2, 3
Fuse 25	8W-20-2, 3
Fusible Link	8W-20-2, 3
G100	8W-20-2, 3
G103	8W-20-2
Generator	8W-20-2, 3
Power Distribution Center	8W-20-2, 3
Powertrain Control Module	8W-20-2, 3
Starter Motor	8W-20-2, 3

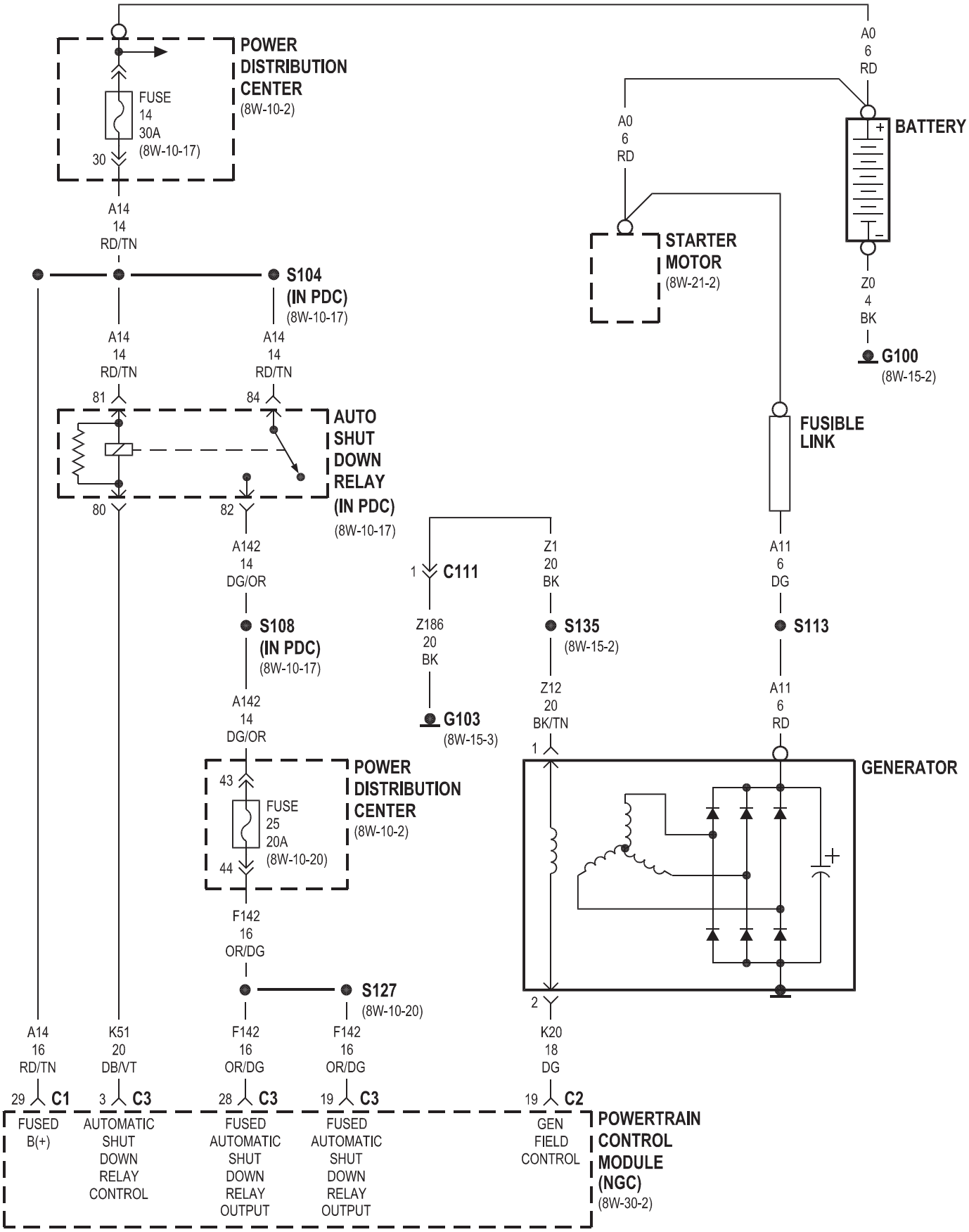
POWER DISTRIBUTION CENTER
(8W-10-2)
FUSE 14 30A
(8W-10-17)
30
A14 14 RD/TN
S104 (IN PDC)
(8W-10-17)
A14 14 RD/TN
A14 14 RD/TN
81
84
AUTO SHUT DOWN RELAY (IN PDC)
(8W-10-17)
80
82
A142 14 DG/OR
S108 (IN PDC)
(8W-10-17)
A142 14 DG/OR
POWER DISTRIBUTION CENTER
(8W-10-2)
43
FUSE 25 20A
(8W-10-20)
44
F142 16 OR/DG
S127
(8W-10-20)
A0 6 RD
A0 6 RD
BATTERY
STARTER MOTOR
(8W-21-2)
Z0 4 BK
G100
(8W-15-2)
FUSIBLE LINK
1
C111
Z186 20 BK
G103
(8W-15-3)
Z1 20 BK
S135
(8W-15-2)
Z12 20 BK/TN
A11 6 DG
S113
A11 6 RD
1
GENERATOR
2
A14 16 RD/TN
K51 20 DB/VT
F142 16 OR/DG
F142 16 OR/DG
K20 18 DG
29 C1
3 C3
28 C3
19 C3
19 C2
FUSED B(+)
AUTOMATIC SHUT DOWN RELAY CONTROL
FUSED AUTOMATIC SHUT DOWN RELAY OUTPUT
FUSED AUTOMATIC SHUT DOWN RELAY OUTPUT
GEN FIELD CONTROL
POWERTRAIN CONTROL MODULE (NGC)
(8W-30-2)

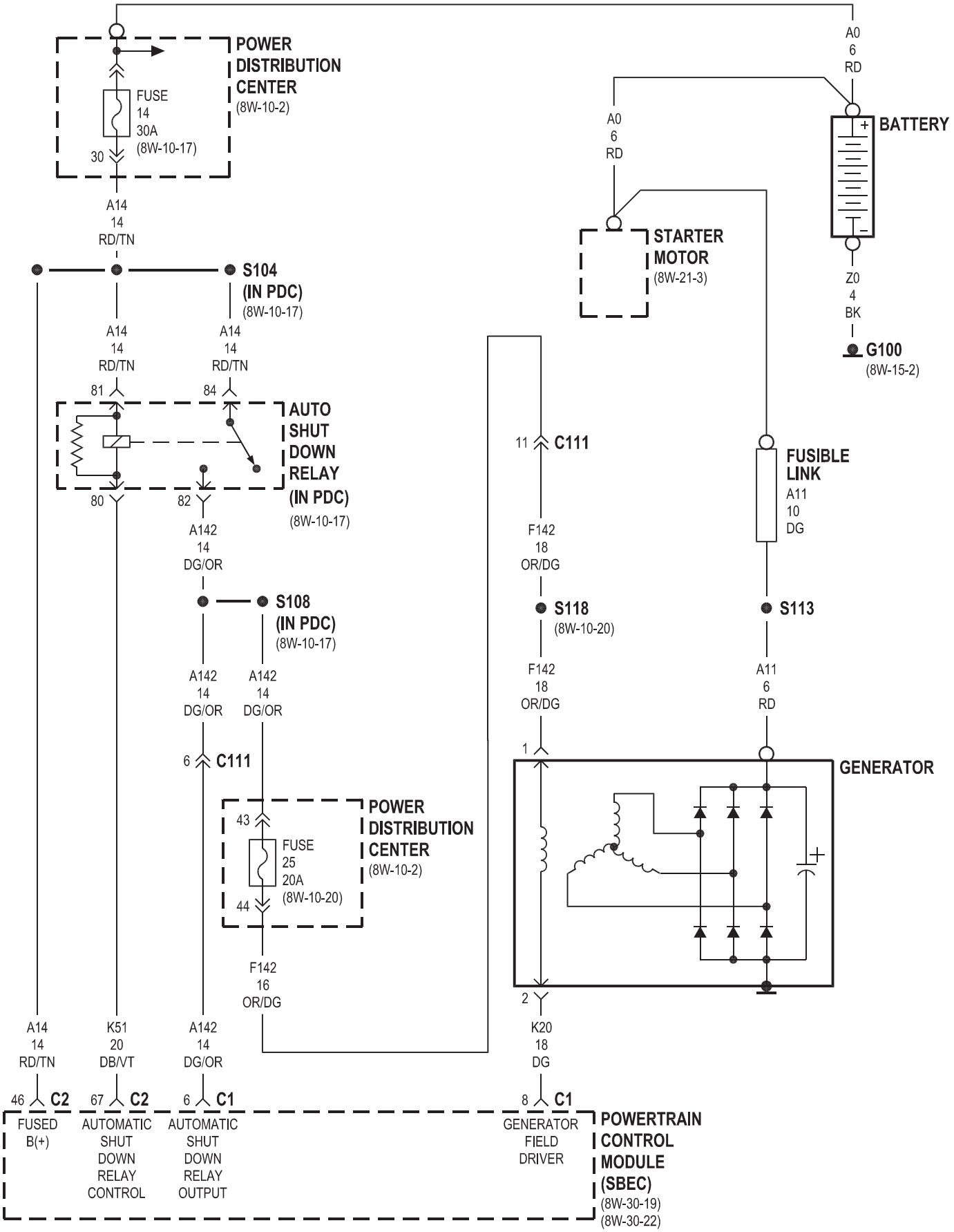
POWER DISTRIBUTION CENTER
(8W-10-2)
FUSE 14 30A
(8W-10-17)
30
A14 14 RD/TN
S104 (IN PDC)
(8W-10-17)
A14 14 RD/TN
A14 14 RD/TN
81
84
AUTO SHUT DOWN RELAY (IN PDC)
(8W-10-17)
80
82
A142 14 DG/OR
S108 (IN PDC)
(8W-10-17)
A142 14 DG/OR
A142 14 DG/OR
6
C111
POWER DISTRIBUTION CENTER
(8W-10-2)
43
FUSE 25 20A
(8W-10-20)
44
F142 16 OR/DG
A14 14 RD/TN
K51 20 DB/VT
A142 14 DG/OR
46
C2
67
C2
6
C1
FUSED B(+)
AUTOMATIC SHUT DOWN RELAY CONTROL
AUTOMATIC SHUT DOWN RELAY OUTPUT
A0 6 RD
A0 6 RD
BATTERY
STARTER MOTOR
(8W-21-3)
Z0 4 BK
G100
(8W-15-2)
11
C111
F142 18 OR/DG
S118
(8W-10-20)
F142 18 OR/DG
FUSIBLE LINK
A11 10 DG
S113
A11 6 RD
1
GENERATOR
2
K20 18 DG
8
C1
GENERATOR FIELD DRIVER
POWERTRAIN CONTROL MODULE (SBEC)
(8W-30-19)
(8W-30-22)

8W-21 STARTING SYSTEM

Component	Page
Battery	8W-21-2, 3
Clutch Interlock/Upstop Switch	8W-21-2, 3
Fuse 8	8W-21-2, 3
Fusible Link	8W-21-2, 3
G103	8W-21-2
Generator	8W-21-2, 3
Ignition Switch	8W-21-2, 3
Power Distribution Center	8W-21-2, 3
Powertrain Control Module	8W-21-2, 3
Starter Motor	8W-21-2, 3
Starter Motor Relay	8W-21-2, 3
Transmission Control Module	8W-21-3

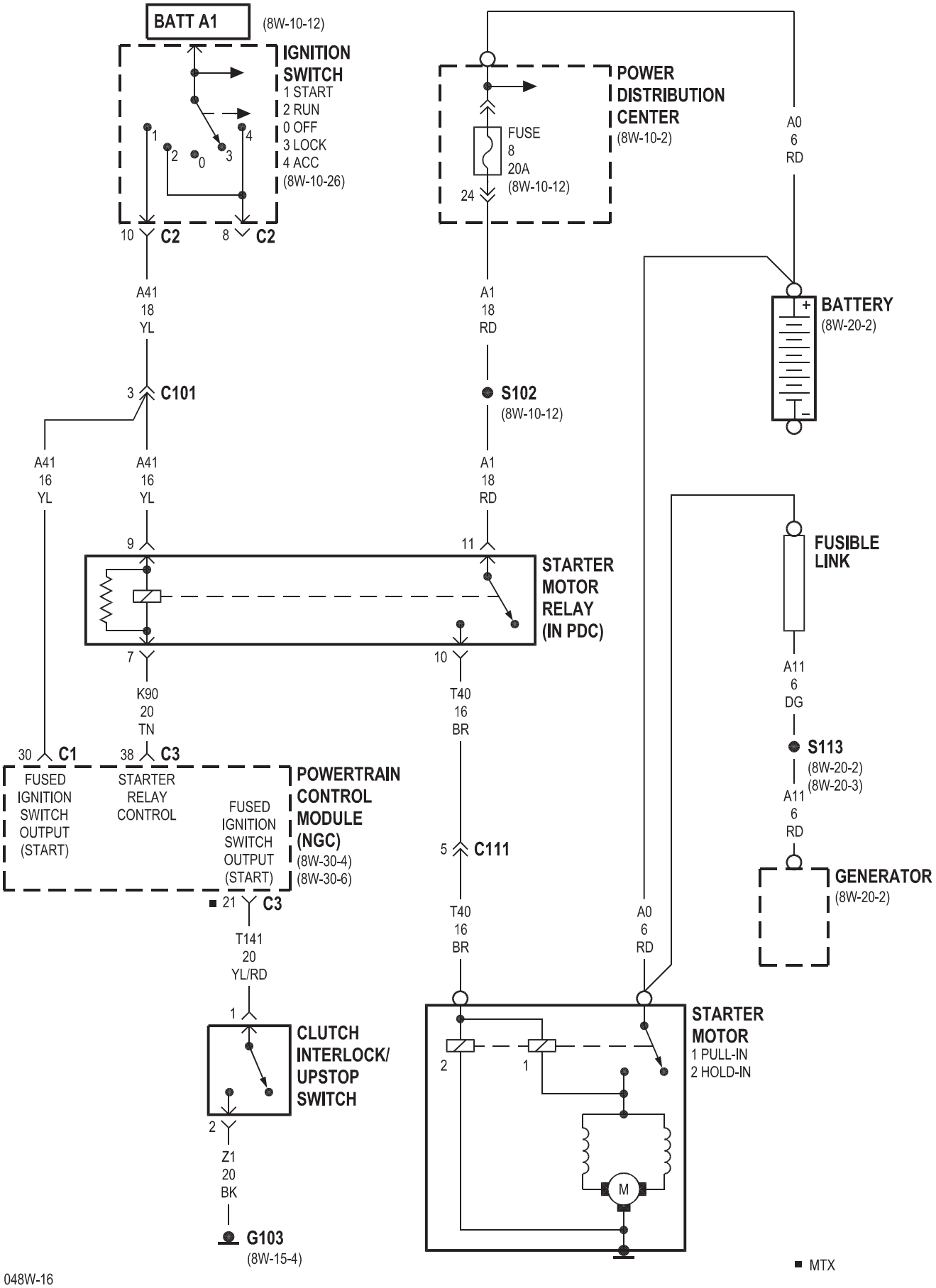
BATT A1
(8W-10-12)
IGNITION SWITCH
1 START
2 RUN
0 OFF
3 LOCK
4 ACC
(8W-10-26)
1
2
0
3
4
10
C2
8
C2
A41
18
YL
3
C101
A41
16
YL
A41
16
YL
9
7
K90
20
TN
30
C1
38
C3
FUSED IGNITION SWITCH OUTPUT (START)
STARTER RELAY CONTROL
FUSED IGNITION SWITCH OUTPUT (START)
POWERTRAIN CONTROL MODULE (NGC)
(8W-30-4)
(8W-30-6)
21
C3
T141
20
YL/RD
1
CLUTCH INTERLOCK/ UPSTOP SWITCH
2
Z1
20
BK
G103
(8W-15-4)
POWER DISTRIBUTION CENTER
(8W-10-2)
FUSE
8
20A
(8W-10-12)
24
A1
18
RD
S102
(8W-10-12)
A1
18
RD
11
10
T40
16
BR
5
C111
T40
16
BR
A0
6
RD
A0
6
RD
BATTERY
(8W-20-2)
+
–
FUSIBLE LINK
A11
6
DG
S113
(8W-20-2)
(8W-20-3)
A11
6
RD
GENERATOR
(8W-20-2)
STARTER MOTOR
1 PULL-IN
2 HOLD-IN
2
1
M
■ MTX

2.7L

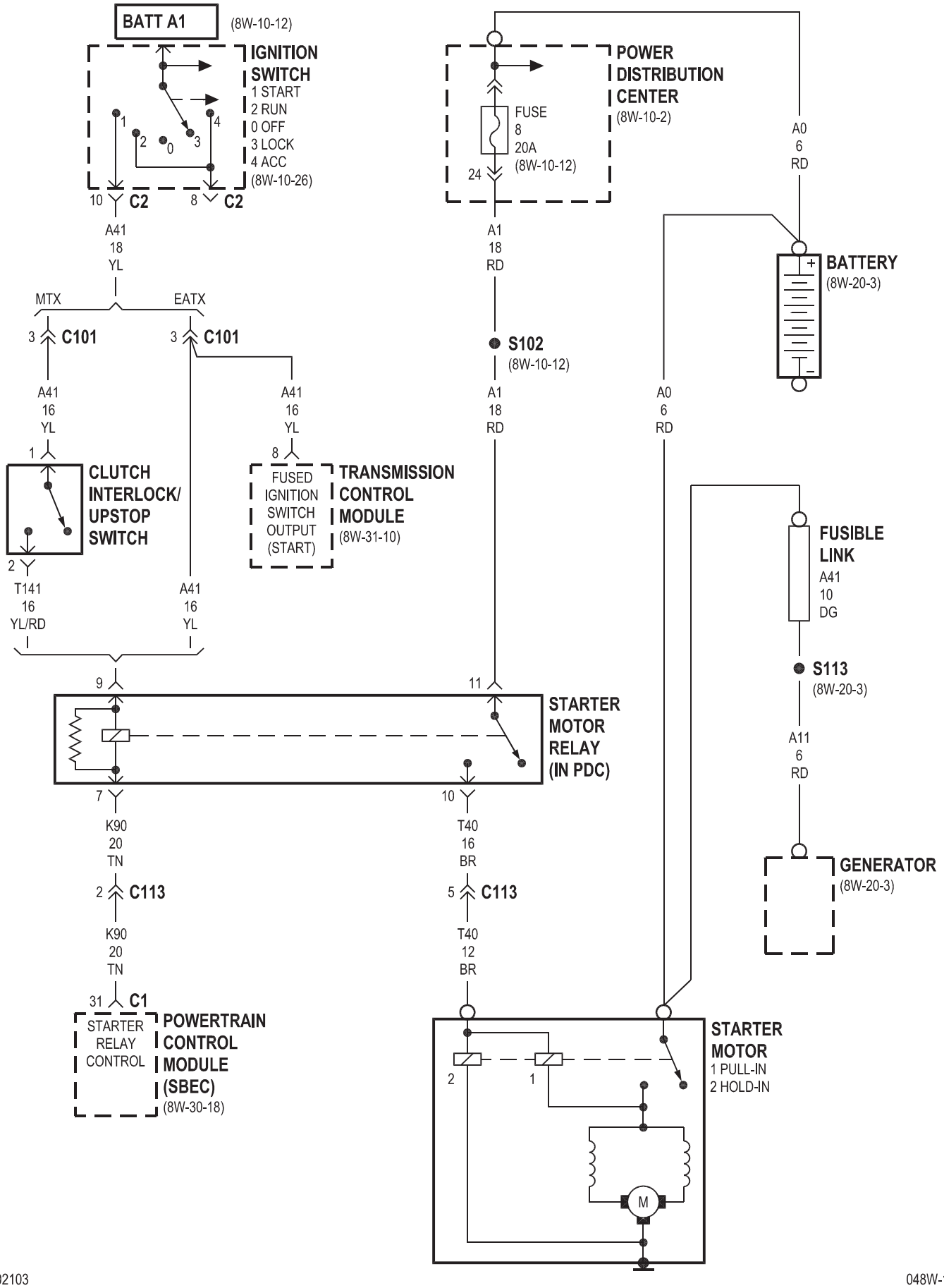
BATT A1
(8W-10-12)
IGNITION SWITCH
1 START
2 RUN
0 OFF
3 LOCK
4 ACC
(8W-10-26)
10 C2
8 C2
A41
18
YL
POWER DISTRIBUTION CENTER
(8W-10-2)
FUSE
8
20A
(8W-10-12)
24
A1
18
RD
A0
6
RD
BATTERY
(8W-20-3)
MTX
EATX
3 C101
3 C101
S102
(8W-10-12)
A41
16
YL
A1
18
RD
A0
6
RD
1
8
CLUTCH INTERLOCK/ UPSTOP SWITCH
FUSED IGNITION SWITCH OUTPUT (START)
TRANSMISSION CONTROL MODULE
(8W-31-10)
2
T141
16
YL/RD
A41
16
YL
FUSIBLE LINK
A41
10
DG
S113
(8W-20-3)
9
11
STARTER MOTOR RELAY (IN PDC)
7
10
A11
6
RD
K90
20
TN
T40
16
BR
GENERATOR
(8W-20-3)
2 C113
5 C113
K90
20
TN
T40
12
BR
31 C1
STARTER RELAY CONTROL
POWERTRAIN CONTROL MODULE (SBEC)
(8W-30-18)
STARTER MOTOR
1 PULL-IN
2 HOLD-IN
2
1
M

8W-30 FUEL/IGNITION SYSTEM

Component	Page
A/C Compressor Clutch Relay	8W-30-3, 20
A/C Pressure Transducer	8W-30-7, 23
Ambient Temperature Sensor	8W-30-9, 25
Auto Shut Down Relay	8W-30-2, 10, 11, 12, 19, 27, 29
Autostick Switch	8W-30-14
Body Control Module	8W-30-4, 5, 18, 21
Brake Lamp Switch	8W-30-13, 32
Brake Transmission Shift Interlock Solenoid	8W-30-13, 32
Camshaft Position Sensor	8W-30-9, 26
Clockspring	8W-30-13, 32
Clutch Interlock/Upstop Switch	8W-30-6
Coil On Plug No. 1	8W-30-31
Coil On Plug No. 2	8W-30-31
Coil On Plug No. 3	8W-30-31
Coil On Plug No. 4	8W-30-31
Coil On Plug No. 5	8W-30-31
Coil On Plug No. 6	8W-30-31
Controller Antilock Brake	8W-30-24
Crankshaft Position Sensor	8W-30-7, 23
Data Link Connector	8W-30-5, 21
Engine Coolant Temperature Sensor	8W-30-7, 23
EVAP/Purge Solenoid	8W-30-6, 22
Fuel Injector No. 1	8W-30-12, 30
Fuel Injector No. 2	8W-30-12, 30
Fuel Injector No. 3	8W-30-12, 30
Fuel Injector No. 4	8W-30-12, 30
Fuel Injector No. 5	8W-30-30
Fuel Injector No. 6	8W-30-30
Fuel Pump Module	8W-30-4, 18
Fuel Pump Relay	8W-30-4, 18
Fuse 8	8W-30-4, 18
Fuse 9	8W-30-14
Fuse 11	8W-30-14
Fuse 14	8W-30-2, 19, 29
Fuse 23	8W-30-2, 3, 4, 18, 19, 20
Fuse 24	8W-30-29
Fuse 25	8W-30-10, 11, 27, 29
G103	8W-30-2, 3, 6, 10, 14, 19, 27, 29
G108	8W-30-2
G300	8W-30-4, 18
G302	8W-30-4, 18
Generator	8W-30-6, 22
High Speed Radiator Fan Relay	8W-30-3, 20
Idle Air Control Motor	8W-30-6, 22
Ignition Coil Pack	8W-30-2, 11, 12
Ignition Switch	8W-30-4
Inlet Air Temp Sensor	8W-30-8, 25
Input Speed Sensor	8W-30-15
Junction Block	8W-30-14
Knock Sensor	8W-30-9, 26
Leak Detection Pump	8W-30-20
Low Speed Radiator Fan Relay	8W-30-3, 20
Manifold Absolute Pressure Sensor	8W-30-8, 26
Natural Vacuum Leak Detection Assembly	8W-30-3
Noise Suppressor	8W-30-11
Noise Suppressor No. 1	8W-30-31
Noise Suppressor No. 2	8W-30-31
Output Speed Sensor	8W-30-15
Oxygen Sensor 1/1 Right Bank Up	8W-30-27, 28
Oxygen Sensor 1/1 Upstream	8W-30-10
Oxygen Sensor 1/2 Downstream	8W-30-10
Oxygen Sensor 1/2 Right Bank Down	8W-30-27, 28
Oxygen Sensor 2/1 Left Bank Up	8W-30-27, 28
Oxygen Sensor 2/2 Left Bank Down	8W-30-27, 28
PCV Heater	8W-30-29
Power Distribution Center	8W-30-2, 3, 4, 10, 11, 14, 16, 17, 18, 19, 20, 27, 29
Power Steering Pressure Switch	8W-30-10
Powertrain Control Module	8W-30-2, 3, 4, 5, 6, 7, 8, 9, 10, 11, 12, 13, 14, 15, 16, 17, 18, 19, 20, 21, 22, 23, 24, 25, 26, 27, 28, 30, 31, 32
Starter Motor Relay	8W-30-4, 18
Throttle Position Sensor	8W-30-8, 25
Transmission Control Module	8W-30-21, 24
Transmission Control Relay	8W-30-14, 16, 17
Transmission Range Sensor	8W-30-6, 15, 24
Transmission Solenoid/Pressure Switch Assembly	8W-30-16, 17
Vehicle Speed Control Servo	8W-30-13, 32
Vehicle Speed Sensor	8W-30-9, 16

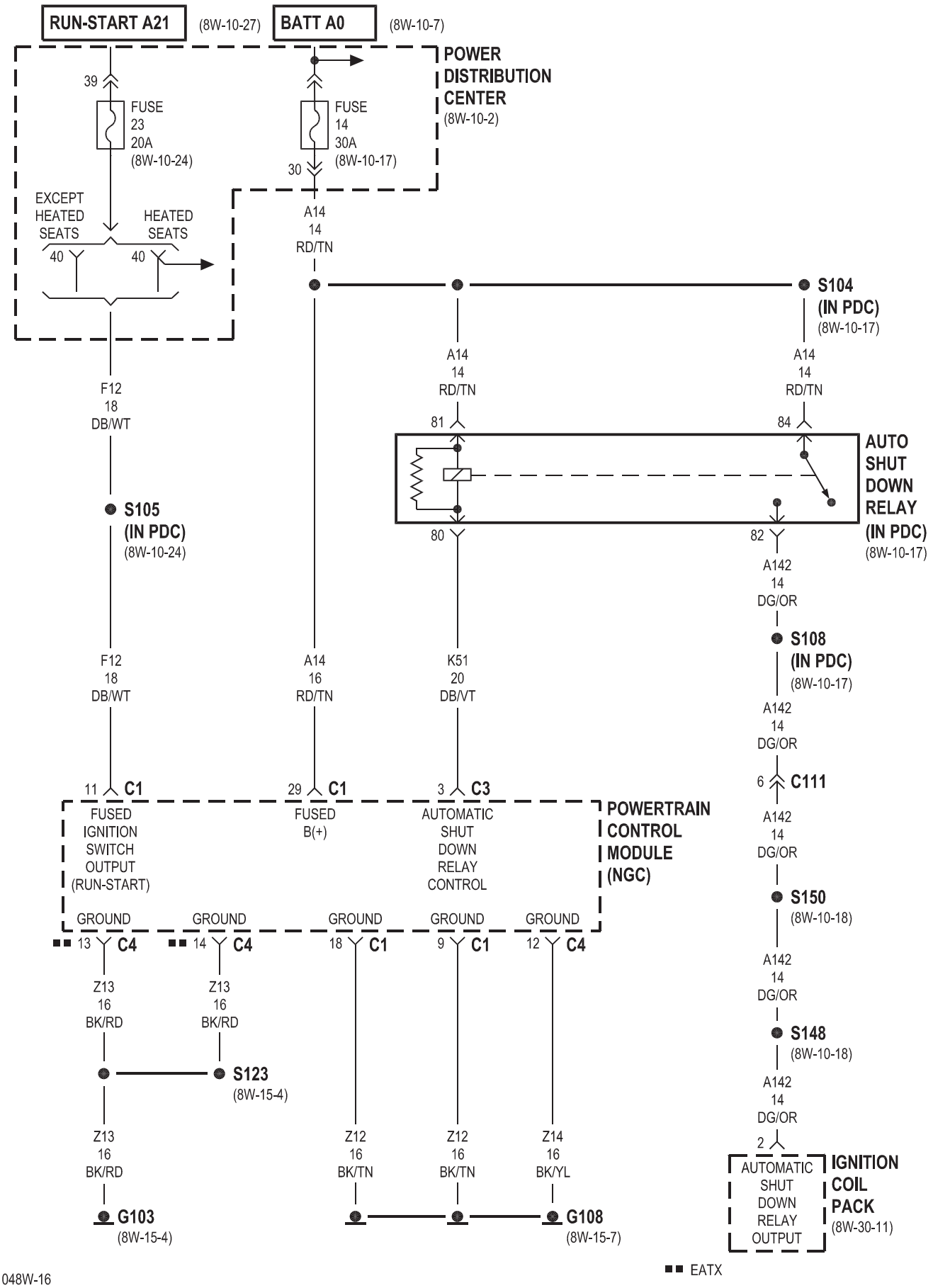
RUN-START A21
(8W-10-27)
BATT A0
(8W-10-7)
POWER DISTRIBUTION CENTER
(8W-10-2)
39
FUSE 23 20A
(8W-10-24)
FUSE 14 30A
(8W-10-17)
30
EXCEPT HEATED SEATS
HEATED SEATS
40
40
A14 14 RD/TN
S104 (IN PDC)
(8W-10-17)
A14 14 RD/TN
A14 14 RD/TN
F12 18 DB/WT
81
84
AUTO SHUT DOWN RELAY (IN PDC)
(8W-10-17)
S105 (IN PDC)
(8W-10-24)
80
82
A142 14 DG/OR
S108 (IN PDC)
(8W-10-17)
F12 18 DB/WT
A14 16 RD/TN
K51 20 DB/VT
A142 14 DG/OR
6
C111
11 C1
29 C1
3 C3
FUSED IGNITION SWITCH OUTPUT (RUN-START)
FUSED B(+)
AUTOMATIC SHUT DOWN RELAY CONTROL
POWERTRAIN CONTROL MODULE (NGC)
A142 14 DG/OR
S150
(8W-10-18)
GROUND
GROUND
GROUND
GROUND
GROUND
13 C4
14 C4
18 C1
9 C1
12 C4
A142 14 DG/OR
Z13 16 BK/RD
Z13 16 BK/RD
S148
(8W-10-18)
S123
(8W-15-4)
A142 14 DG/OR
Z13 16 BK/RD
Z12 16 BK/TN
Z12 16 BK/TN
Z14 16 BK/YL
2
AUTOMATIC SHUT DOWN RELAY OUTPUT
IGNITION COIL PACK
(8W-30-11)
G103
(8W-15-4)
G108
(8W-15-7)
EATX

2.0L/2.4L

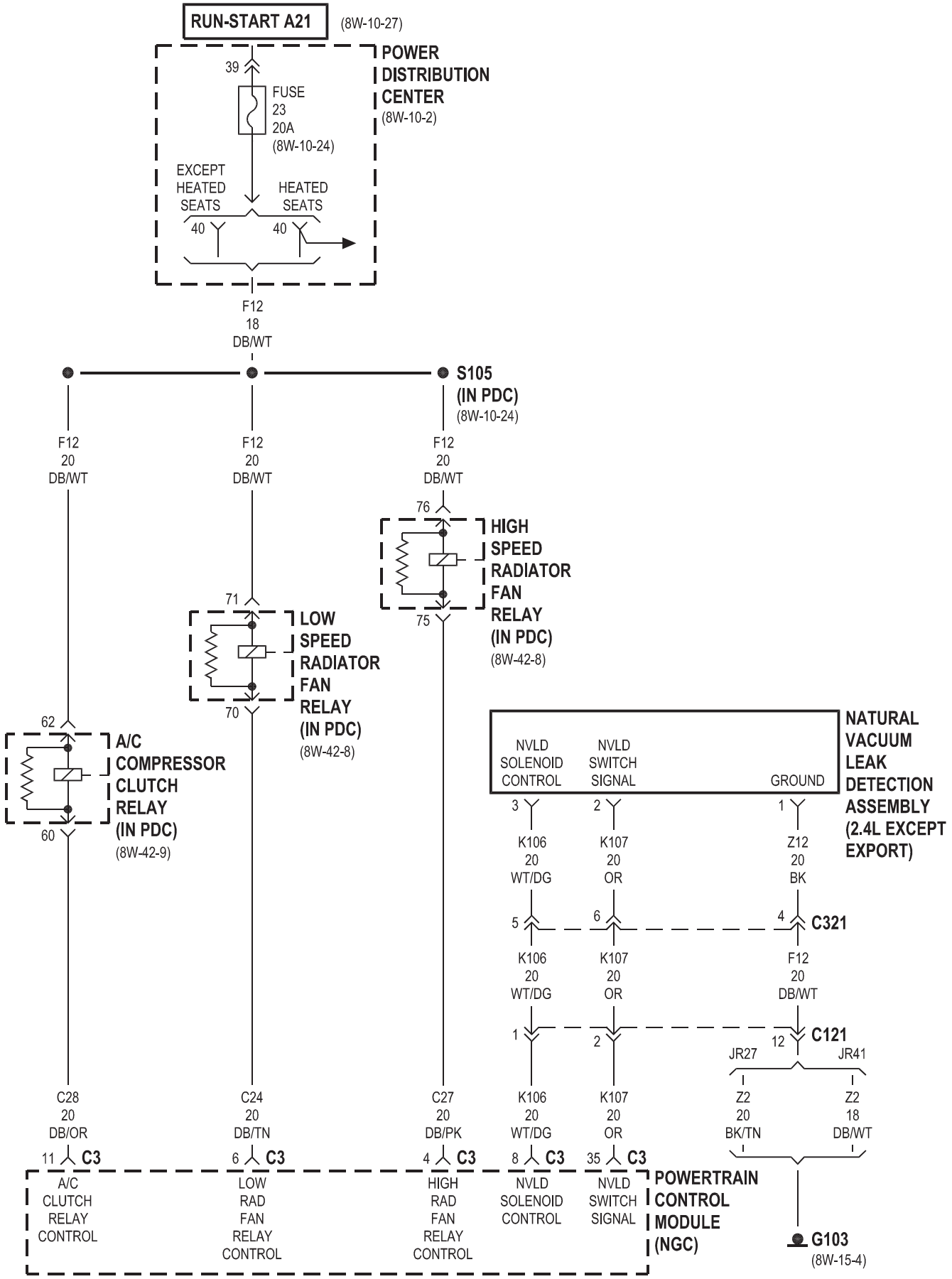
RUN-START A21
(8W-10-27)
POWER DISTRIBUTION CENTER
(8W-10-2)
39
FUSE 23 20A
(8W-10-24)
EXCEPT HEATED SEATS
HEATED SEATS
40
40
F12 18 DB/WT
S105 (IN PDC)
(8W-10-24)
F12 20 DB/WT
F12 20 DB/WT
F12 20 DB/WT
76
HIGH SPEED RADIATOR FAN RELAY (IN PDC)
(8W-42-8)
75
71
LOW SPEED RADIATOR FAN RELAY (IN PDC)
(8W-42-8)
70
62
A/C COMPRESSOR CLUTCH RELAY (IN PDC)
(8W-42-9)
60
NATURAL VACUUM LEAK DETECTION ASSEMBLY (2.4L EXCEPT EXPORT)
NVLD SOLENOID CONTROL
NVLD SWITCH SIGNAL
GROUND
3
2
1
K106 20 WT/DG
K107 20 OR
Z12 20 BK
5
6
4
C321
K106 20 WT/DG
K107 20 OR
F12 20 DB/WT
1
2
12
C121
JR27
JR41
C28 20 DB/OR
C24 20 DB/TN
C27 20 DB/PK
K106 20 WT/DG
K107 20 OR
Z2 20 BK/TN
Z2 18 DB/WT
11 C3
6 C3
4 C3
8 C3
35 C3
A/C CLUTCH RELAY CONTROL
LOW RAD FAN RELAY CONTROL
HIGH RAD FAN RELAY CONTROL
NVLD SOLENOID CONTROL
NVLD SWITCH SIGNAL
POWERTRAIN CONTROL MODULE (NGC)
G103
(8W-15-4)

2.0L/2.4L

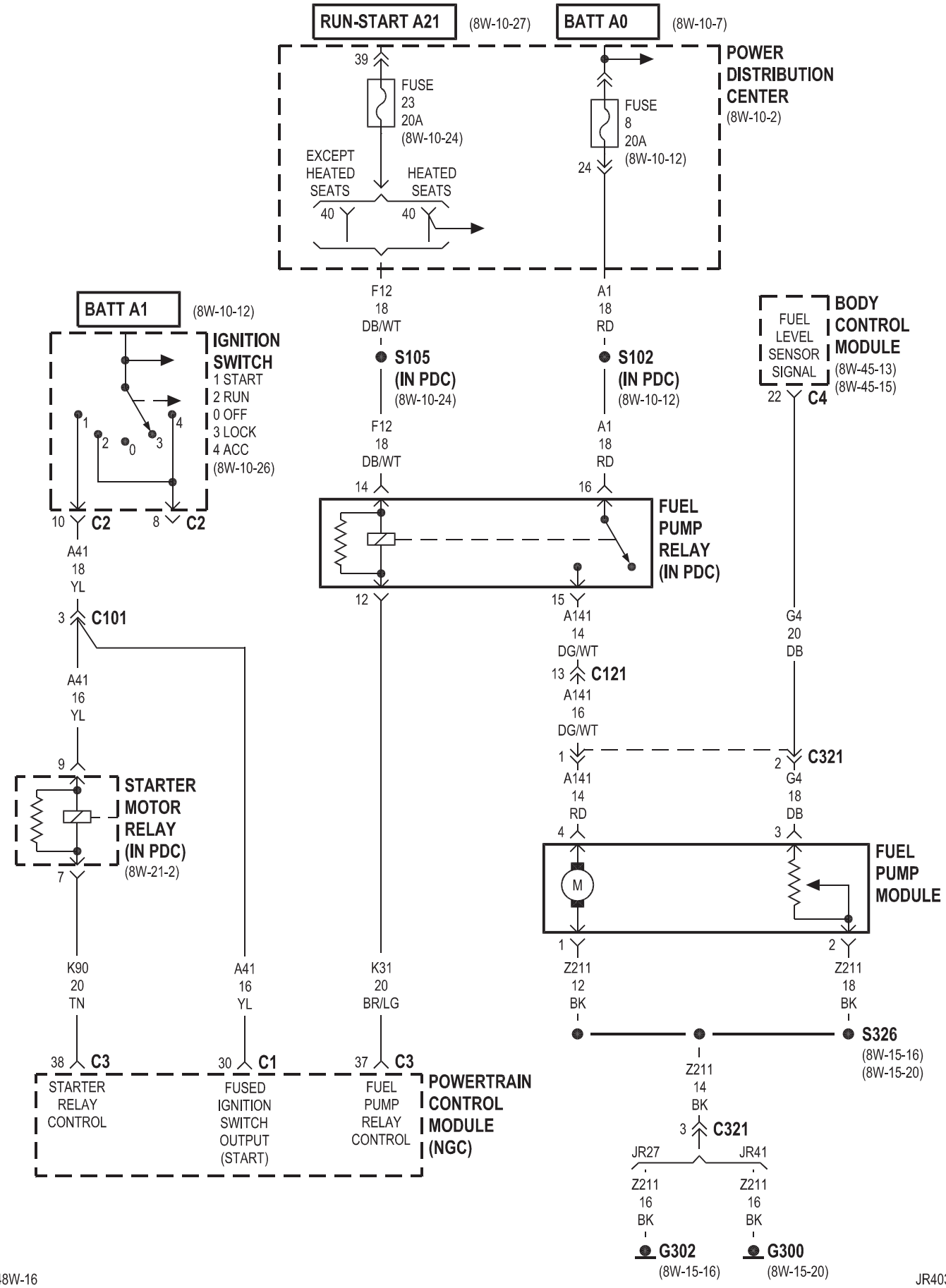
RUN-START A21
(8W-10-27)
BATT A0
(8W-10-7)
POWER DISTRIBUTION CENTER
(8W-10-2)
39
FUSE 23 20A
(8W-10-24)
FUSE 8 20A
(8W-10-12)
24
EXCEPT HEATED SEATS
HEATED SEATS
40
40
BATT A1
(8W-10-12)
IGNITION SWITCH
1 START
2 RUN
0 OFF
3 LOCK
4 ACC
(8W-10-26)
10 C2
8 C2
A41 18 YL
3 C101
A41 16 YL
9
STARTER MOTOR RELAY (IN PDC)
(8W-21-2)
7
K90 20 TN
38 C3
STARTER RELAY CONTROL
A41 16 YL
30 C1
FUSED IGNITION SWITCH OUTPUT (START)
F12 18 DB/WT
S105 (IN PDC)
(8W-10-24)
F12 18 DB/WT
14
12
K31 20 BR/LG
37 C3
FUEL PUMP RELAY CONTROL
POWERTRAIN CONTROL MODULE (NGC)
A1 18 RD
S102 (IN PDC)
(8W-10-12)
A1 18 RD
16
15
FUEL PUMP RELAY (IN PDC)
A141 14 DG/WT
13 C121
A141 16 DG/WT
1
A141 14 RD
4
M
1
Z211 12 BK
FUEL LEVEL SENSOR SIGNAL
BODY CONTROL MODULE
(8W-45-13)
(8W-45-15)
22 C4
G4 20 DB
2 C321
G4 18 DB
3
FUEL PUMP MODULE
2
Z211 18 BK
S326
(8W-15-16)
(8W-15-20)
Z211 14 BK
3 C321
JR27
JR41
Z211 16 BK
Z211 16 BK
G302
(8W-15-16)
G300
(8W-15-20)

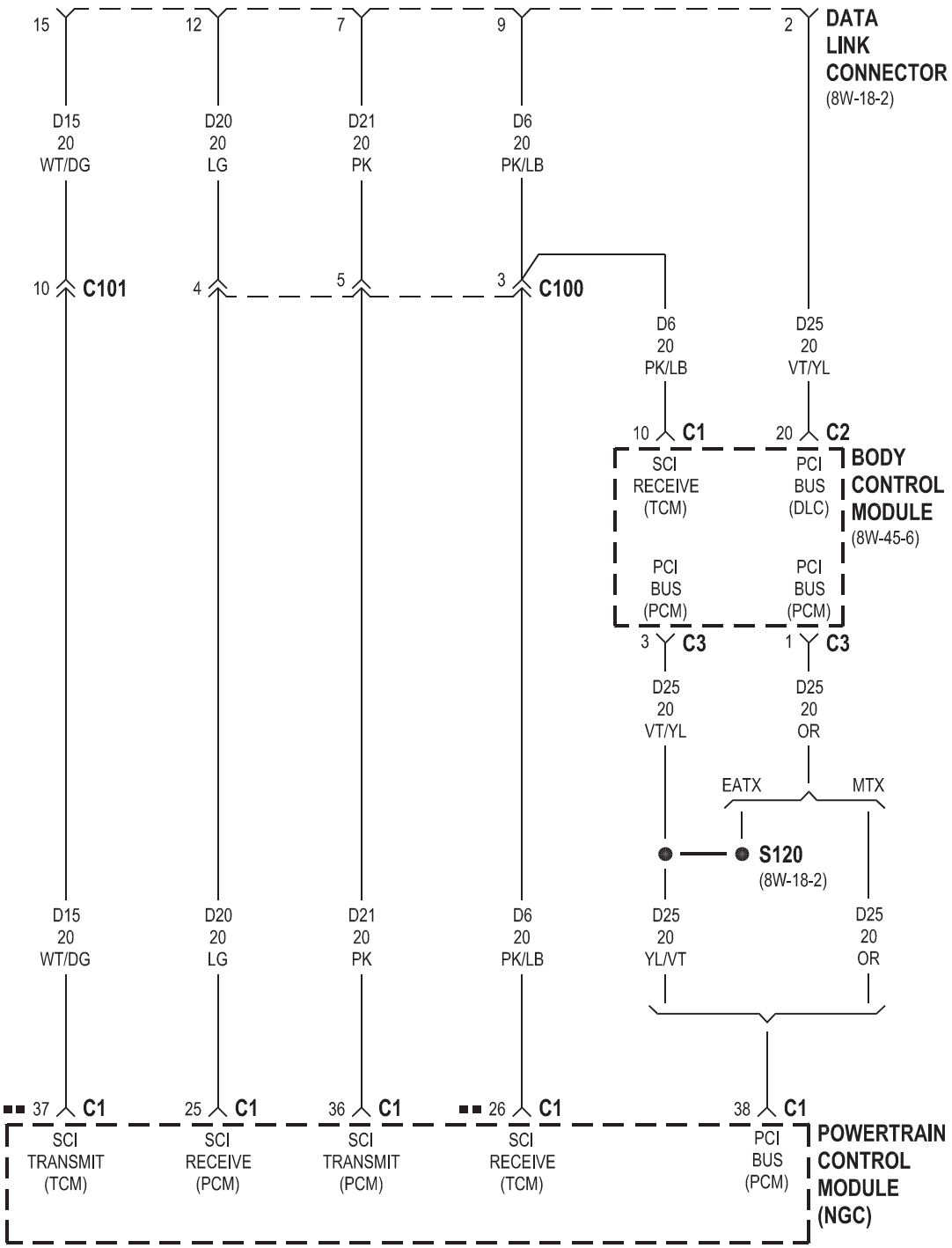
15
12
7
9
2
DATA LINK CONNECTOR
(8W-18-2)
D15 20 WT/DG
D20 20 LG
D21 20 PK
D6 20 PK/LB
10 C101
4
5
3 C100
D6 20 PK/LB
D25 20 VT/YL
10 C1
20 C2
SCI RECEIVE (TCM)
PCI BUS (DLC)
BODY CONTROL MODULE
(8W-45-6)
PCI BUS (PCM)
PCI BUS (PCM)
3 C3
1 C3
D25 20 VT/YL
D25 20 OR
EATX
MTX
S120
(8W-18-2)
D15 20 WT/DG
D20 20 LG
D21 20 PK
D6 20 PK/LB
D25 20 YL/VT
D25 20 OR
37 C1
25 C1
36 C1
26 C1
38 C1
SCI TRANSMIT (TCM)
SCI RECEIVE (PCM)
SCI TRANSMIT (PCM)
SCI RECEIVE (TCM)
PCI BUS (PCM)
POWERTRAIN CONTROL MODULE (NGC)

■■ EATX

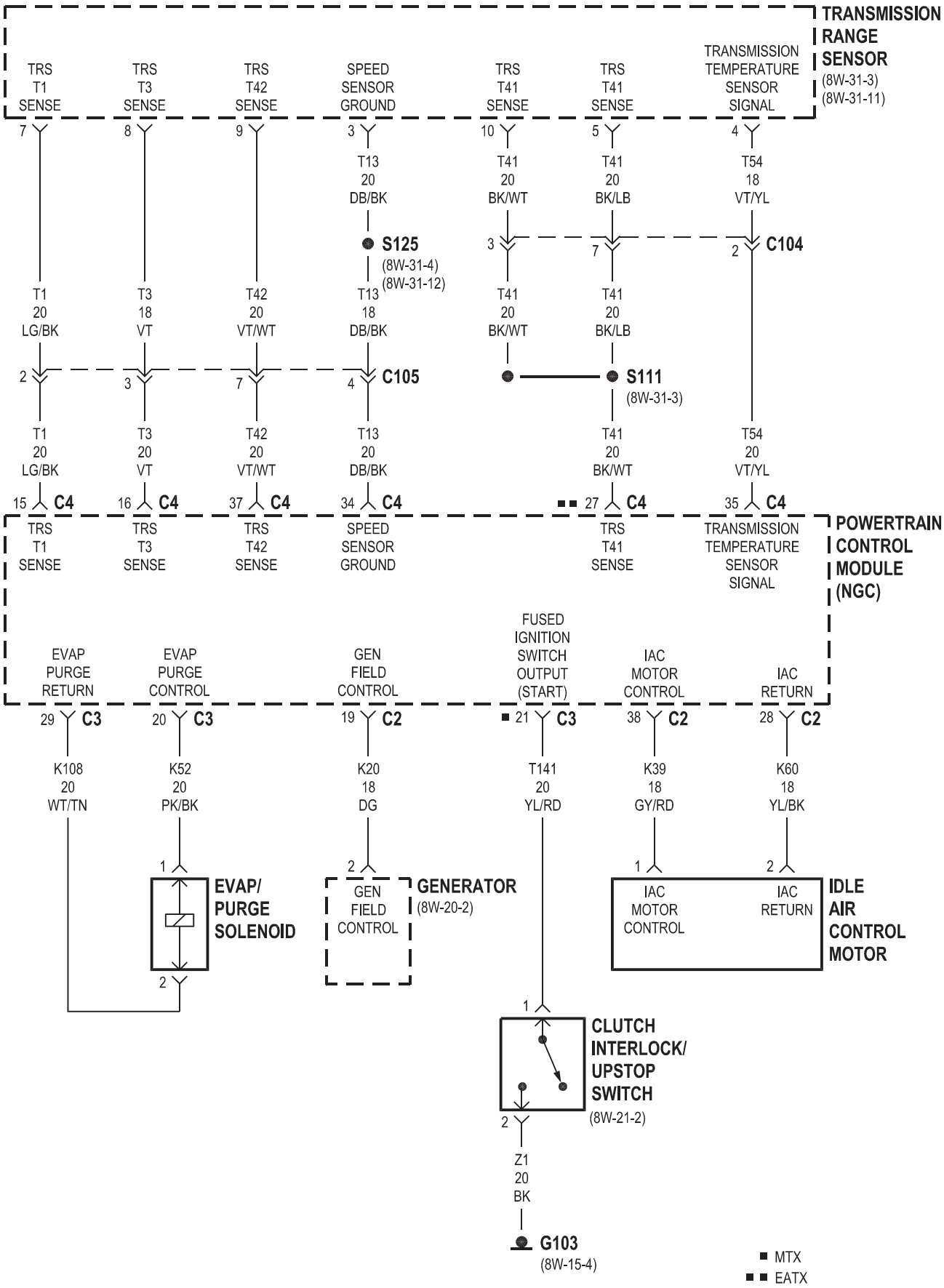
TRANSMISSION RANGE SENSOR
(8W-31-3)
(8W-31-11)
TRS T1 SENSE
TRS T3 SENSE
TRS T42 SENSE
SPEED SENSOR GROUND
TRS T41 SENSE
TRS T41 SENSE
TRANSMISSION TEMPERATURE SENSOR SIGNAL
7
8
9
3
10
5
4
T13 20 DB/BK
T41 20 BK/WT
T41 20 BK/LB
T54 18 VT/YL
S125
(8W-31-4)
(8W-31-12)
3
7
2
C104
T1 20 LG/BK
T3 18 VT
T42 20 VT/WT
T13 18 DB/BK
T41 20 BK/WT
T41 20 BK/LB
2
3
7
4
C105
S111
(8W-31-3)
T1 20 LG/BK
T3 20 VT
T42 20 VT/WT
T13 20 DB/BK
T41 20 BK/WT
T54 20 VT/YL
15 C4
16 C4
37 C4
34 C4
27 C4
35 C4
POWERTRAIN CONTROL MODULE (NGC)
TRS T1 SENSE
TRS T3 SENSE
TRS T42 SENSE
SPEED SENSOR GROUND
TRS T41 SENSE
TRANSMISSION TEMPERATURE SENSOR SIGNAL
EVAP PURGE RETURN
EVAP PURGE CONTROL
GEN FIELD CONTROL
FUSED IGNITION SWITCH OUTPUT (START)
IAC MOTOR CONTROL
IAC RETURN
29 C3
20 C3
19 C2
21 C3
38 C2
28 C2
K108 20 WT/TN
K52 20 PK/BK
K20 18 DG
T141 20 YL/RD
K39 18 GY/RD
K60 18 YL/BK
1
2
1
2
EVAP/ PURGE SOLENOID
GEN FIELD CONTROL
GENERATOR
(8W-20-2)
IAC MOTOR CONTROL
IAC RETURN
IDLE AIR CONTROL MOTOR
1
CLUTCH INTERLOCK/ UPSTOP SWITCH
(8W-21-2)
2
Z1 20 BK
G103
(8W-15-4)
MTX
EATX

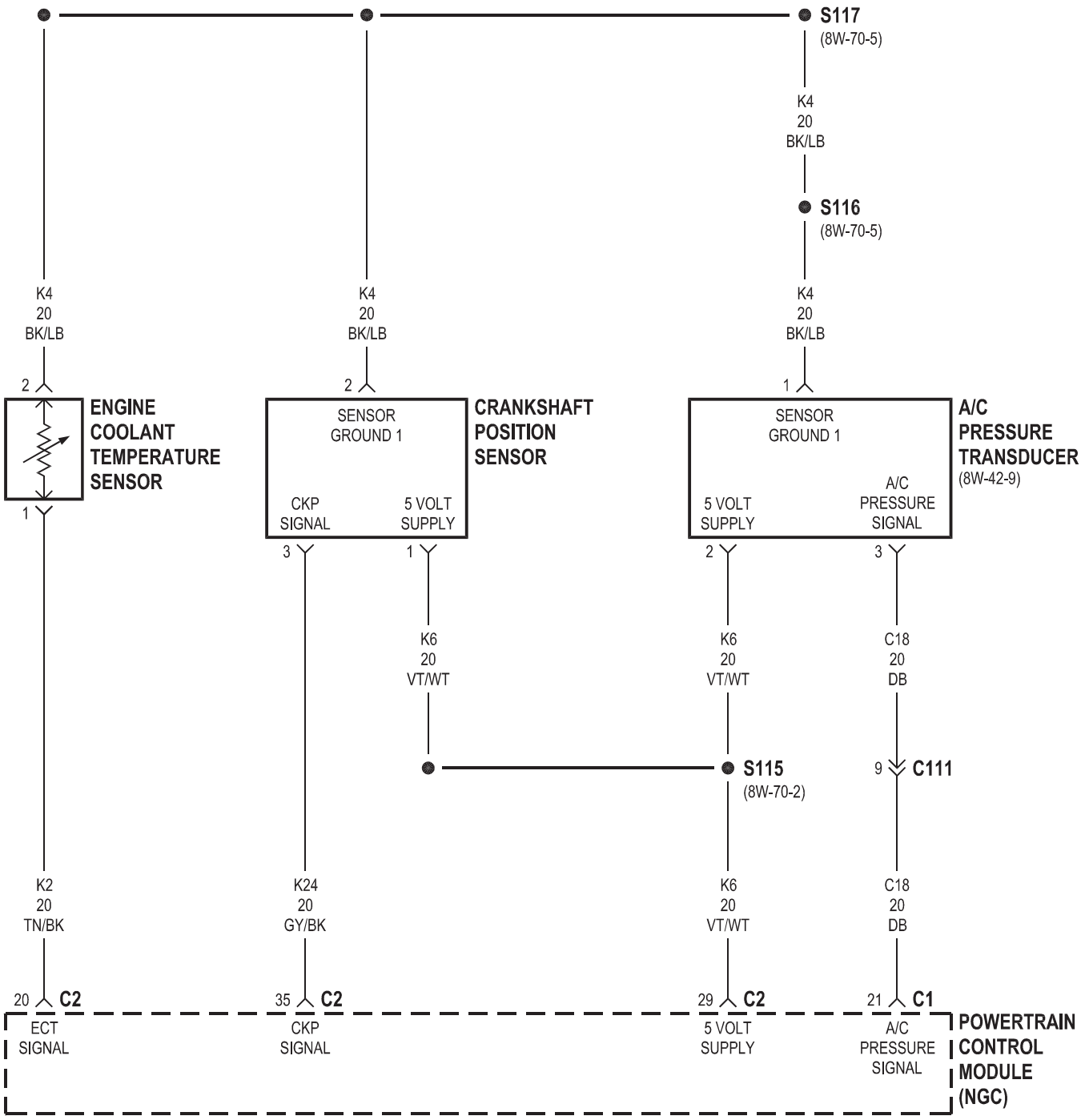
S117
(8W-70-5)
K4
20
BK/LB
S116
(8W-70-5)
K4
20
BK/LB
K4
20
BK/LB
K4
20
BK/LB
2
2
1
ENGINE
COOLANT
TEMPERATURE
SENSOR
1
SENSOR
GROUND 1
CRANKSHAFT
POSITION
SENSOR
CKP
SIGNAL
5 VOLT
SUPPLY
3
1
SENSOR
GROUND 1
A/C
PRESSURE
TRANSDUCER
(8W-42-9)
5 VOLT
SUPPLY
A/C
PRESSURE
SIGNAL
2
3
K6
20
VT/WT
K6
20
VT/WT
C18
20
DB
S115
(8W-70-2)
9
C111
K2
20
TN/BK
K24
20
GY/BK
K6
20
VT/WT
C18
20
DB
20
C2
35
C2
29
C2
21
C1
ECT
SIGNAL
CKP
SIGNAL
5 VOLT
SUPPLY
A/C
PRESSURE
SIGNAL
POWERTRAIN
CONTROL
MODULE
(NGC)

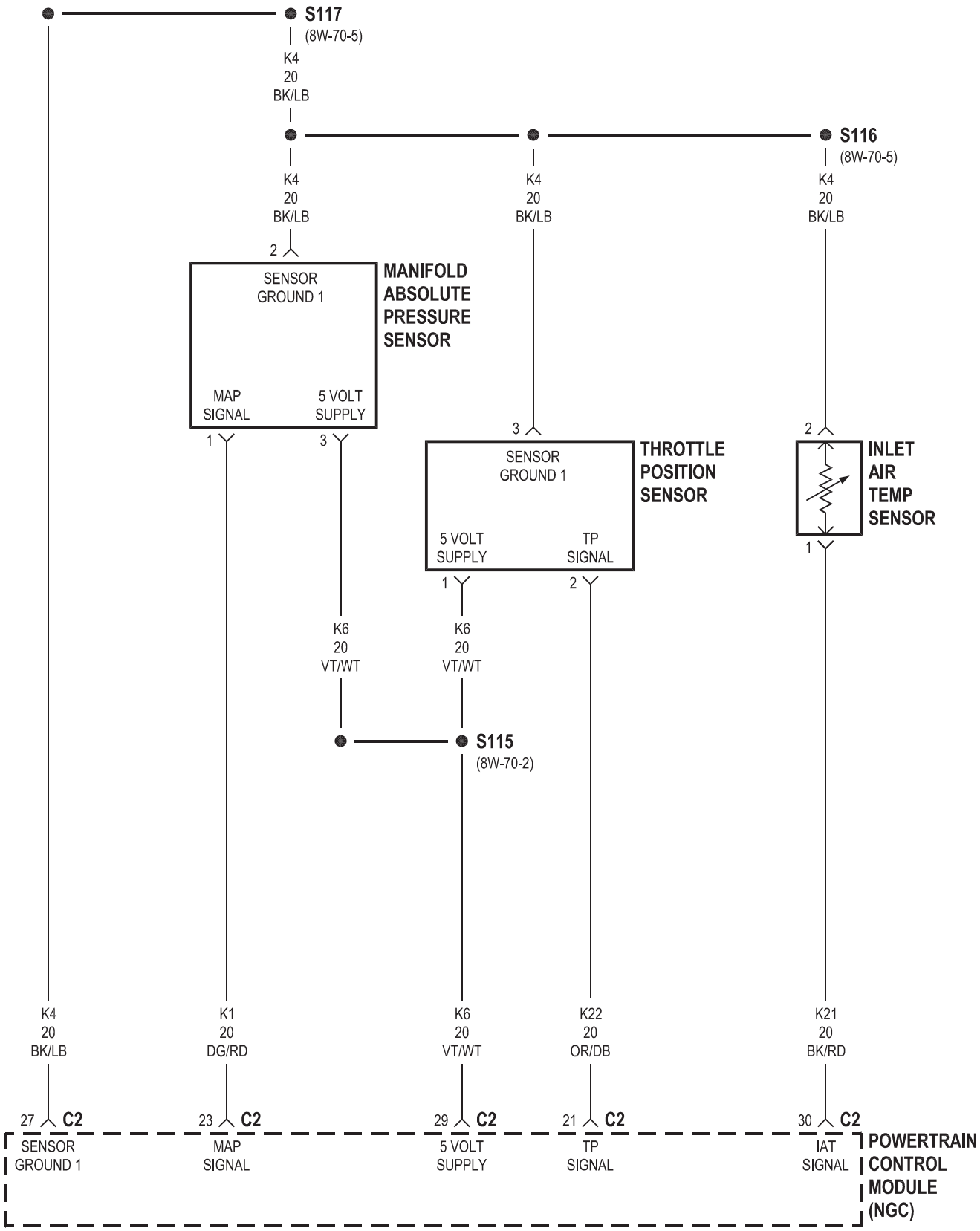
S117
(8W-70-5)
K4
20
BK/LB
S116
(8W-70-5)
K4
20
BK/LB
K4
20
BK/LB
K4
20
BK/LB
2
SENSOR
GROUND 1
MANIFOLD
ABSOLUTE
PRESSURE
SENSOR
MAP
SIGNAL
5 VOLT
SUPPLY
1
3
3
SENSOR
GROUND 1
THROTTLE
POSITION
SENSOR
5 VOLT
SUPPLY
TP
SIGNAL
1
2
2
INLET
AIR
TEMP
SENSOR
1
K6
20
VT/WT
K6
20
VT/WT
S115
(8W-70-2)
K4
20
BK/LB
K1
20
DG/RD
K6
20
VT/WT
K22
20
OR/DB
K21
20
BK/RD
27 C2
23 C2
29 C2
21 C2
30 C2
SENSOR
GROUND 1
MAP
SIGNAL
5 VOLT
SUPPLY
TP
SIGNAL
IAT
SIGNAL
POWERTRAIN
CONTROL
MODULE
(NGC)

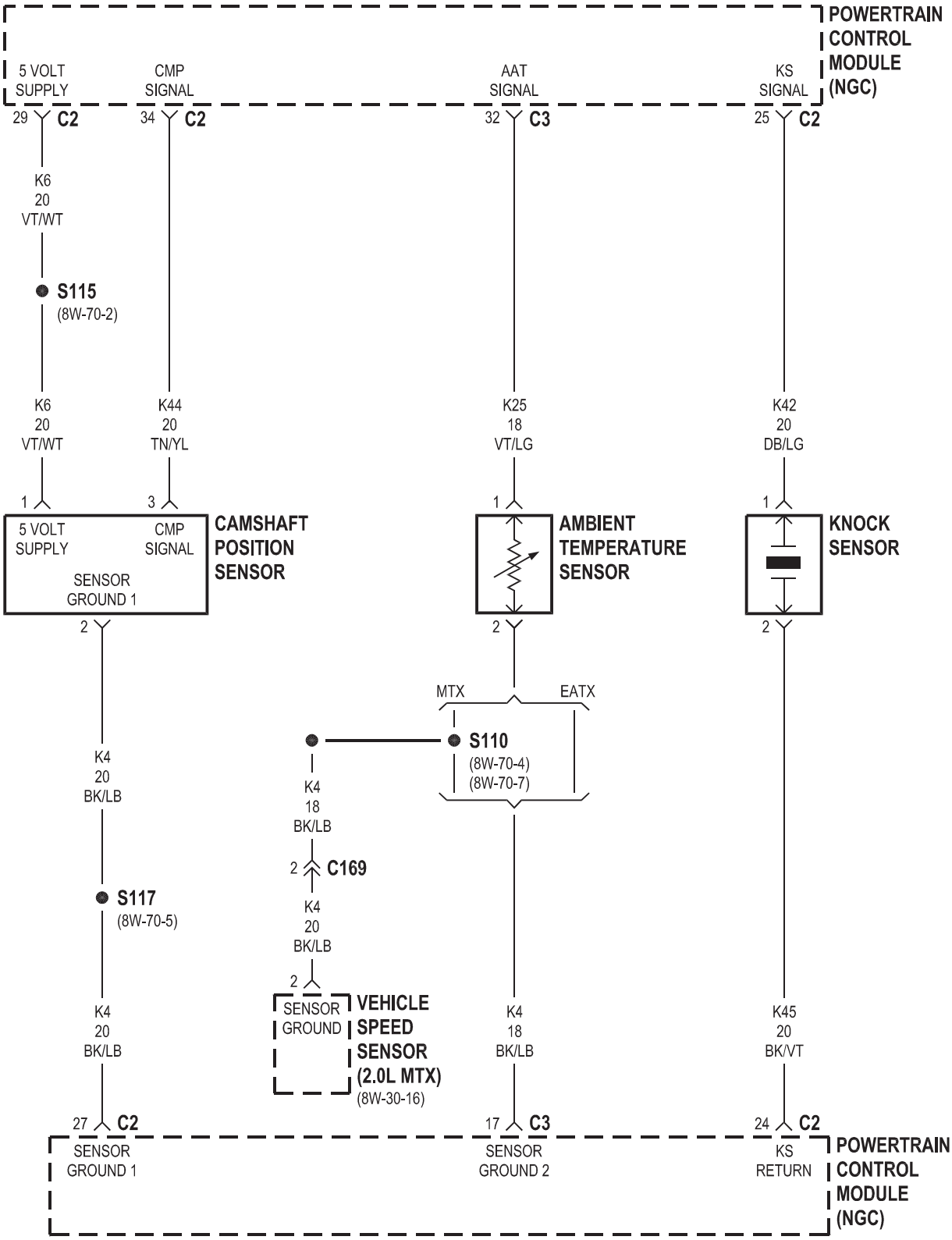
POWERTRAIN CONTROL MODULE (NGC)
5 VOLT SUPPLY
CMP SIGNAL
AAT SIGNAL
KS SIGNAL
29 C2
34 C2
32 C3
25 C2
K6 20 VT/WT
S115 (8W-70-2)
K6 20 VT/WT
K44 20 TN/YL
K25 18 VT/LG
K42 20 DB/LG
1
3
1
1
5 VOLT SUPPLY
CMP SIGNAL
SENSOR GROUND 1
CAMSHAFT POSITION SENSOR
AMBIENT TEMPERATURE SENSOR
KNOCK SENSOR
2
2
2
MTX
EATX
S110 (8W-70-4) (8W-70-7)
K4 20 BK/LB
K4 18 BK/LB
2 C169
S117 (8W-70-5)
K4 20 BK/LB
2
SENSOR GROUND
VEHICLE SPEED SENSOR (2.0L MTX) (8W-30-16)
K4 20 BK/LB
K4 18 BK/LB
K45 20 BK/VT
27 C2
17 C3
24 C2
SENSOR GROUND 1
SENSOR GROUND 2
KS RETURN
POWERTRAIN CONTROL MODULE (NGC)

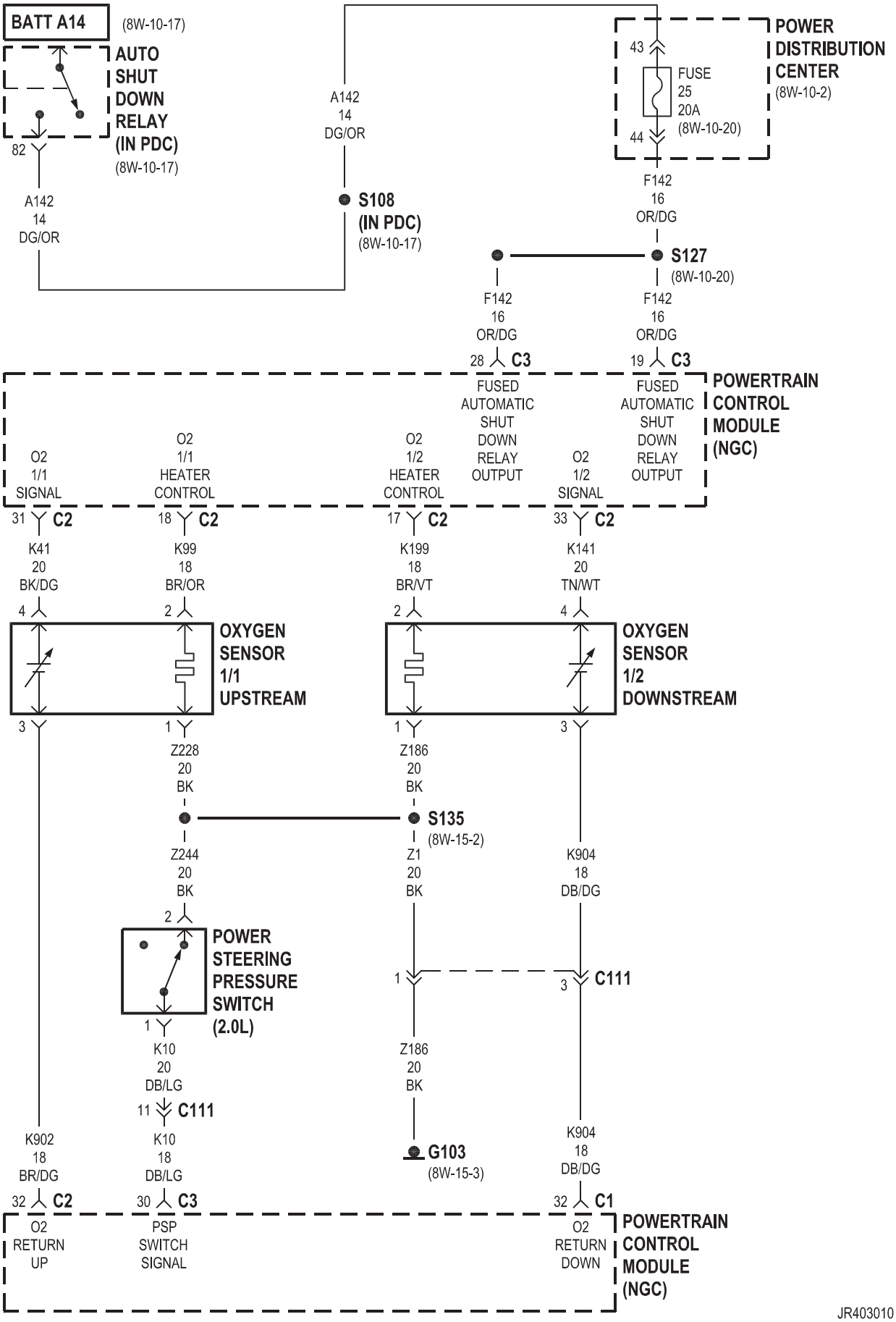
BATT A14
(8W-10-17)
AUTO SHUT DOWN RELAY (IN PDC)
(8W-10-17)
82
A142 14 DG/OR
A142 14 DG/OR
S108 (IN PDC)
(8W-10-17)
POWER DISTRIBUTION CENTER
(8W-10-2)
43
FUSE 25 20A
(8W-10-20)
44
F142 16 OR/DG
S127
(8W-10-20)
F142 16 OR/DG
F142 16 OR/DG
28 C3
19 C3
POWERTRAIN CONTROL MODULE (NGC)
O2 1/1 SIGNAL
O2 1/1 HEATER CONTROL
O2 1/2 HEATER CONTROL
FUSED AUTOMATIC SHUT DOWN RELAY OUTPUT
O2 1/2 SIGNAL
FUSED AUTOMATIC SHUT DOWN RELAY OUTPUT
31 C2
18 C2
17 C2
33 C2
K41 20 BK/DG
K99 18 BR/OR
K199 18 BR/VT
K141 20 TN/WT
4
2
2
4
OXYGEN SENSOR 1/1 UPSTREAM
OXYGEN SENSOR 1/2 DOWNSTREAM
3
1
1
3
Z228 20 BK
Z186 20 BK
S135
(8W-15-2)
Z244 20 BK
Z1 20 BK
K904 18 DB/DG
2
POWER STEERING PRESSURE SWITCH (2.0L)
1
3 C111
1
K10 20 DB/LG
Z186 20 BK
11 C111
K902 18 BR/DG
K10 18 DB/LG
G103
(8W-15-3)
K904 18 DB/DG
32 C2
30 C3
32 C1
O2 RETURN UP
PSP SWITCH SIGNAL
O2 RETURN DOWN
POWERTRAIN CONTROL MODULE (NGC)

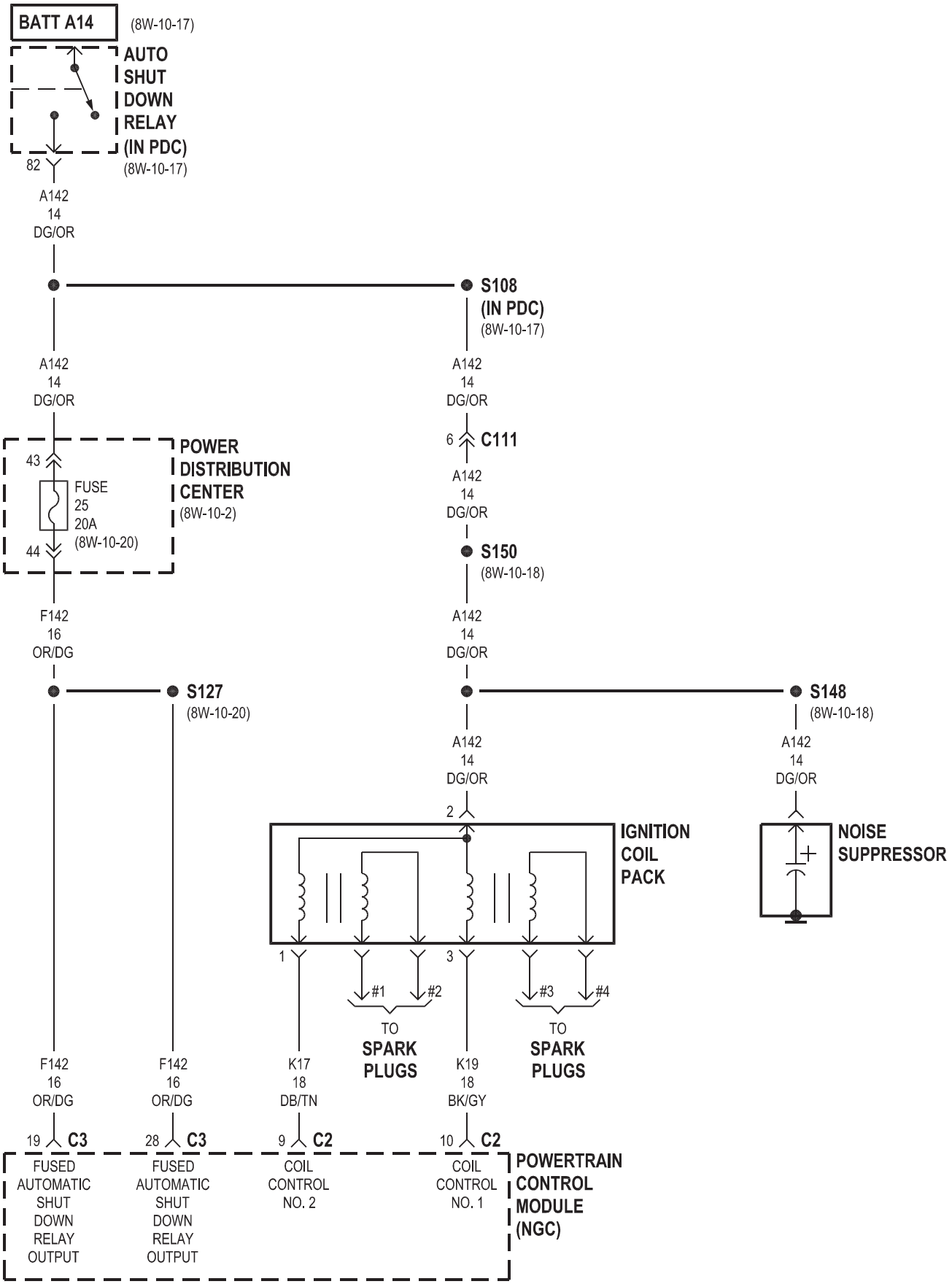
BATT A14
(8W-10-17)
AUTO SHUT DOWN RELAY (IN PDC)
(8W-10-17)
82
A142
14
DG/OR
S108
(IN PDC)
(8W-10-17)
A142
14
DG/OR
A142
14
DG/OR
6
C111
A142
14
DG/OR
43
FUSE
25
20A
(8W-10-20)
44
POWER DISTRIBUTION CENTER
(8W-10-2)
S150
(8W-10-18)
F142
16
OR/DG
A142
14
DG/OR
S127
(8W-10-20)
S148
(8W-10-18)
A142
14
DG/OR
A142
14
DG/OR
2
IGNITION COIL PACK
NOISE SUPPRESSOR
1
3
#1
#2
#3
#4
TO SPARK PLUGS
TO SPARK PLUGS
F142
16
OR/DG
F142
16
OR/DG
K17
18
DB/TN
K19
18
BK/GY
19
C3
28
C3
9
C2
10
C2
FUSED AUTOMATIC SHUT DOWN RELAY OUTPUT
FUSED AUTOMATIC SHUT DOWN RELAY OUTPUT
COIL CONTROL NO. 2
COIL CONTROL NO. 1
POWERTRAIN CONTROL MODULE (NGC)

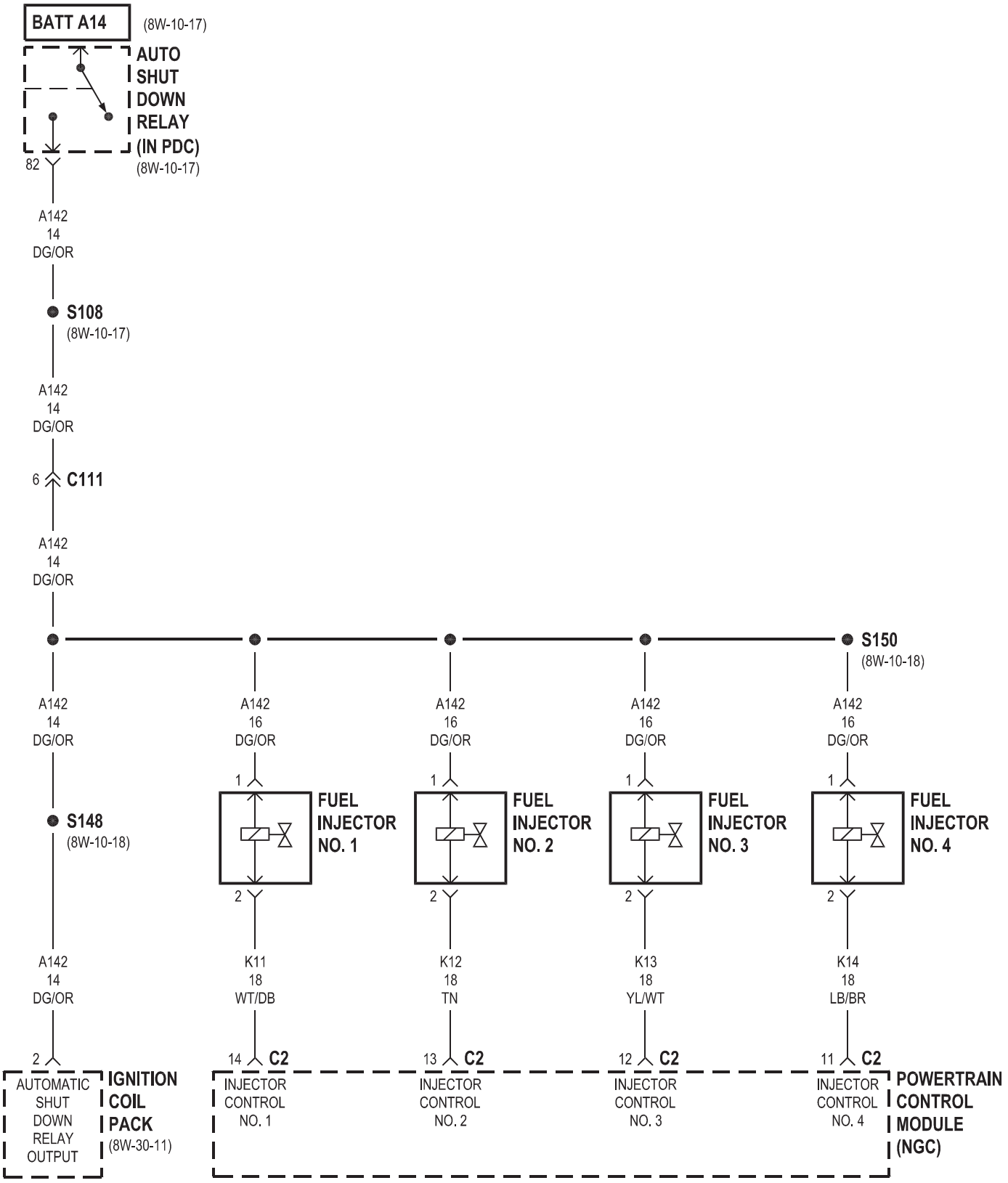
BATT A14
(8W-10-17)
AUTO SHUT DOWN RELAY (IN PDC)
(8W-10-17)
82
A142
14
DG/OR
S108
(8W-10-17)
A142
14
DG/OR
6
C111
A142
14
DG/OR
S150
(8W-10-18)
A142
14
DG/OR
A142
16
DG/OR
A142
16
DG/OR
A142
16
DG/OR
A142
16
DG/OR
S148
(8W-10-18)
1
2
FUEL INJECTOR NO. 1
FUEL INJECTOR NO. 2
FUEL INJECTOR NO. 3
FUEL INJECTOR NO. 4
A142
14
DG/OR
K11
18
WT/DB
K12
18
TN
K13
18
YL/WT
K14
18
LB/BR
2
14
13
12
11
C2
AUTOMATIC SHUT DOWN RELAY OUTPUT
IGNITION COIL PACK
(8W-30-11)
INJECTOR CONTROL NO. 1
INJECTOR CONTROL NO. 2
INJECTOR CONTROL NO. 3
INJECTOR CONTROL NO. 4
POWERTRAIN CONTROL MODULE (NGC)

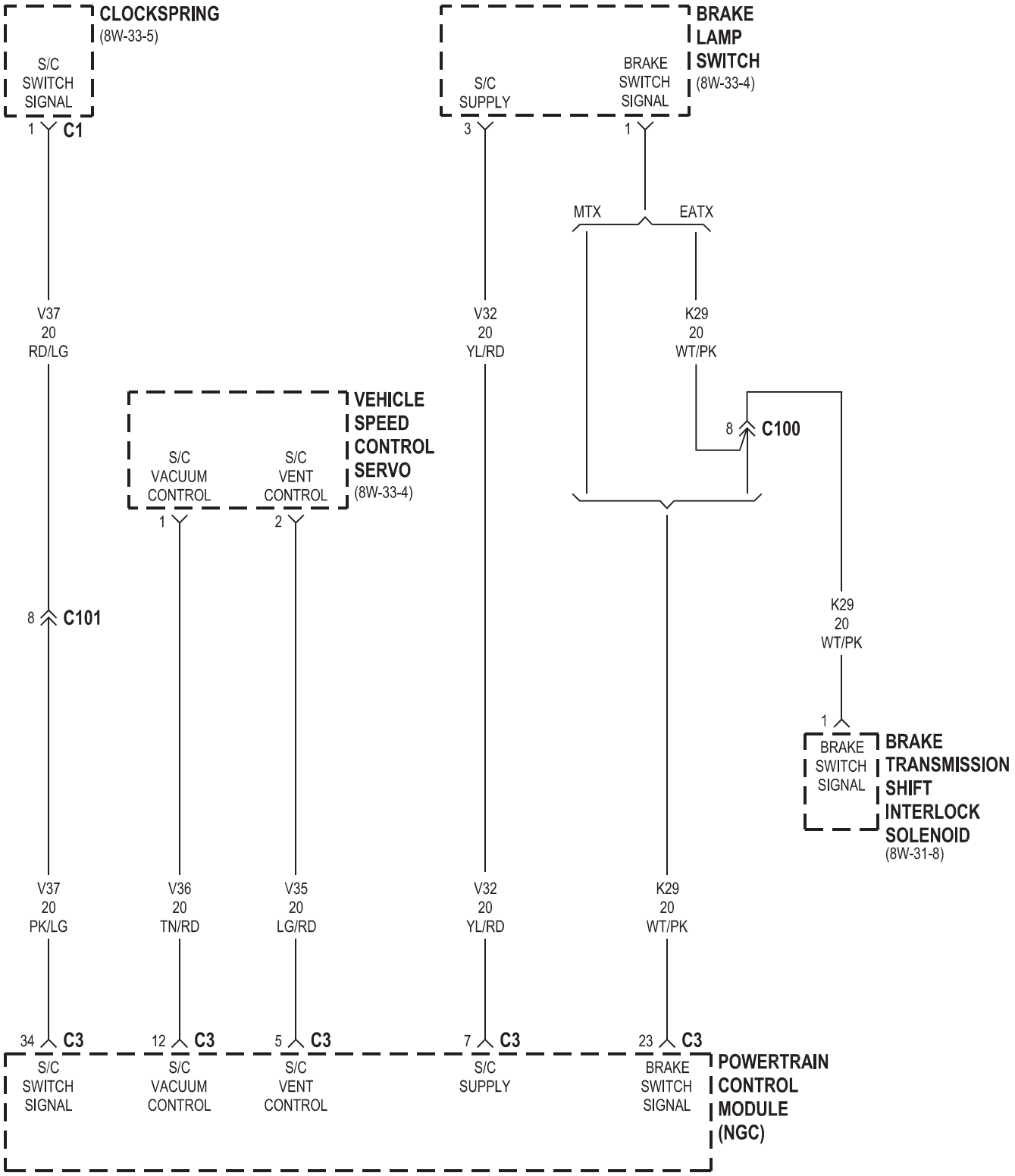
CLOCKSPRING
(8W-33-5)
S/C SWITCH SIGNAL
1
C1
V37
20
RD/LG
8
C101
V37
20
PK/LG
34
C3
S/C SWITCH SIGNAL
VEHICLE SPEED CONTROL SERVO
(8W-33-4)
S/C VACUUM CONTROL
S/C VENT CONTROL
1
2
V36
20
TN/RD
12
C3
S/C VACUUM CONTROL
V35
20
LG/RD
5
C3
S/C VENT CONTROL
BRAKE LAMP SWITCH
(8W-33-4)
S/C SUPPLY
BRAKE SWITCH SIGNAL
3
1
V32
20
YL/RD
7
C3
S/C SUPPLY
MTX
EATX
K29
20
WT/PK
8
C100
K29
20
WT/PK
K29
20
WT/PK
23
C3
BRAKE SWITCH SIGNAL
1
BRAKE SWITCH SIGNAL
BRAKE TRANSMISSION SHIFT INTERLOCK SOLENOID
(8W-31-8)
POWERTRAIN CONTROL MODULE (NGC)

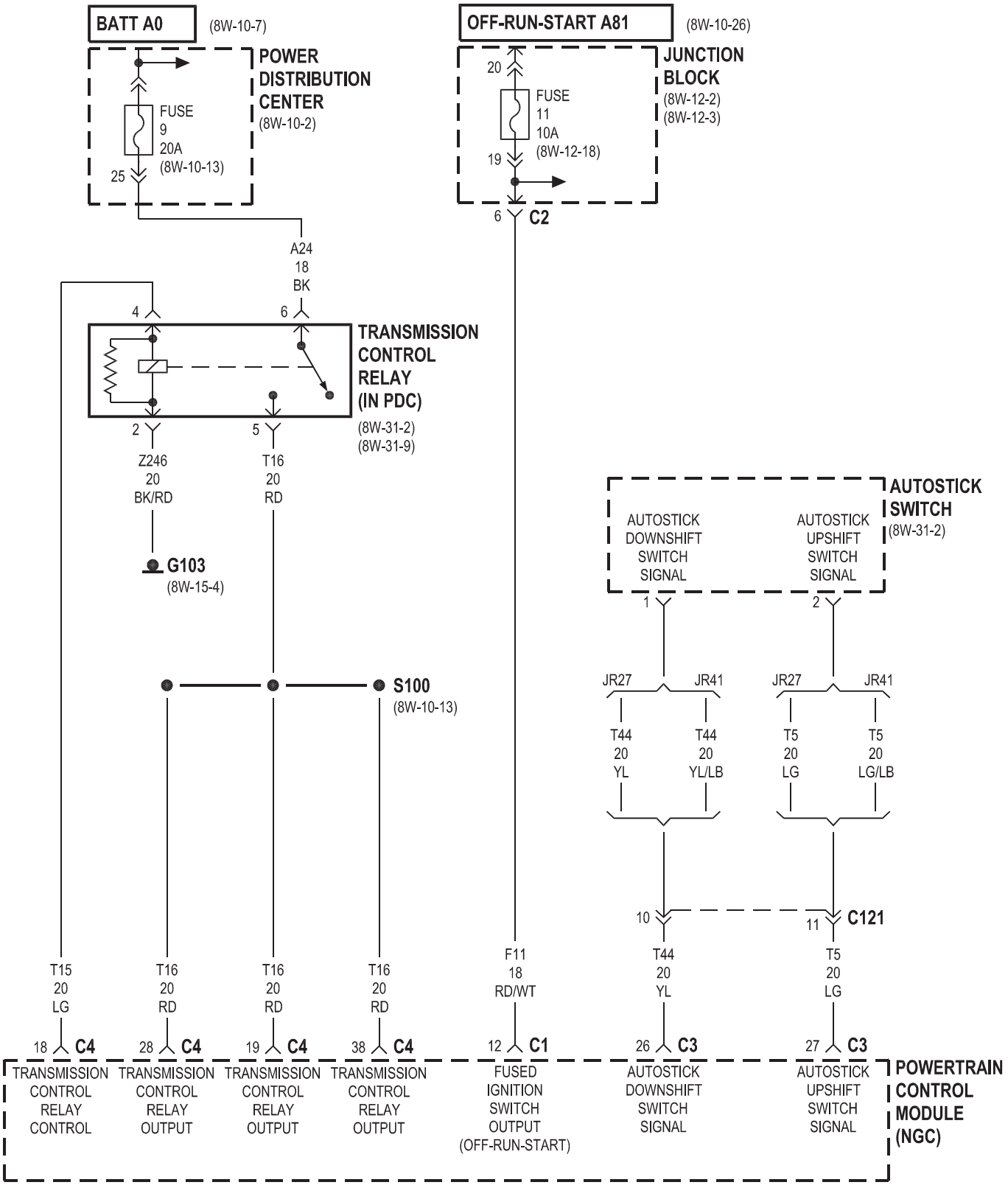
BATT A0
(8W-10-7)
POWER DISTRIBUTION CENTER
(8W-10-2)
FUSE 9 20A
(8W-10-13)
25
OFF-RUN-START A81
(8W-10-26)
JUNCTION BLOCK
(8W-12-2)
(8W-12-3)
20
FUSE 11 10A
(8W-12-18)
19
6
C2
A24 18 BK
4
6
TRANSMISSION CONTROL RELAY (IN PDC)
(8W-31-2)
(8W-31-9)
2
5
Z246 20 BK/RD
T16 20 RD
G103
(8W-15-4)
S100
(8W-10-13)
AUTOSTICK SWITCH
(8W-31-2)
AUTOSTICK DOWNSHIFT SWITCH SIGNAL
AUTOSTICK UPSHIFT SWITCH SIGNAL
1
2
JR27
JR41
JR27
JR41
T44 20 YL
T44 20 YL/LB
T5 20 LG
T5 20 LG/LB
10
11
C121
T15 20 LG
T16 20 RD
T16 20 RD
T16 20 RD
F11 18 RD/WT
T44 20 YL
T5 20 LG
18 C4
28 C4
19 C4
38 C4
12 C1
26 C3
27 C3
TRANSMISSION CONTROL RELAY CONTROL
TRANSMISSION CONTROL RELAY OUTPUT
TRANSMISSION CONTROL RELAY OUTPUT
TRANSMISSION CONTROL RELAY OUTPUT
FUSED IGNITION SWITCH OUTPUT (OFF-RUN-START)
AUTOSTICK DOWNSHIFT SWITCH SIGNAL
AUTOSTICK UPSHIFT SWITCH SIGNAL
POWERTRAIN CONTROL MODULE (NGC)

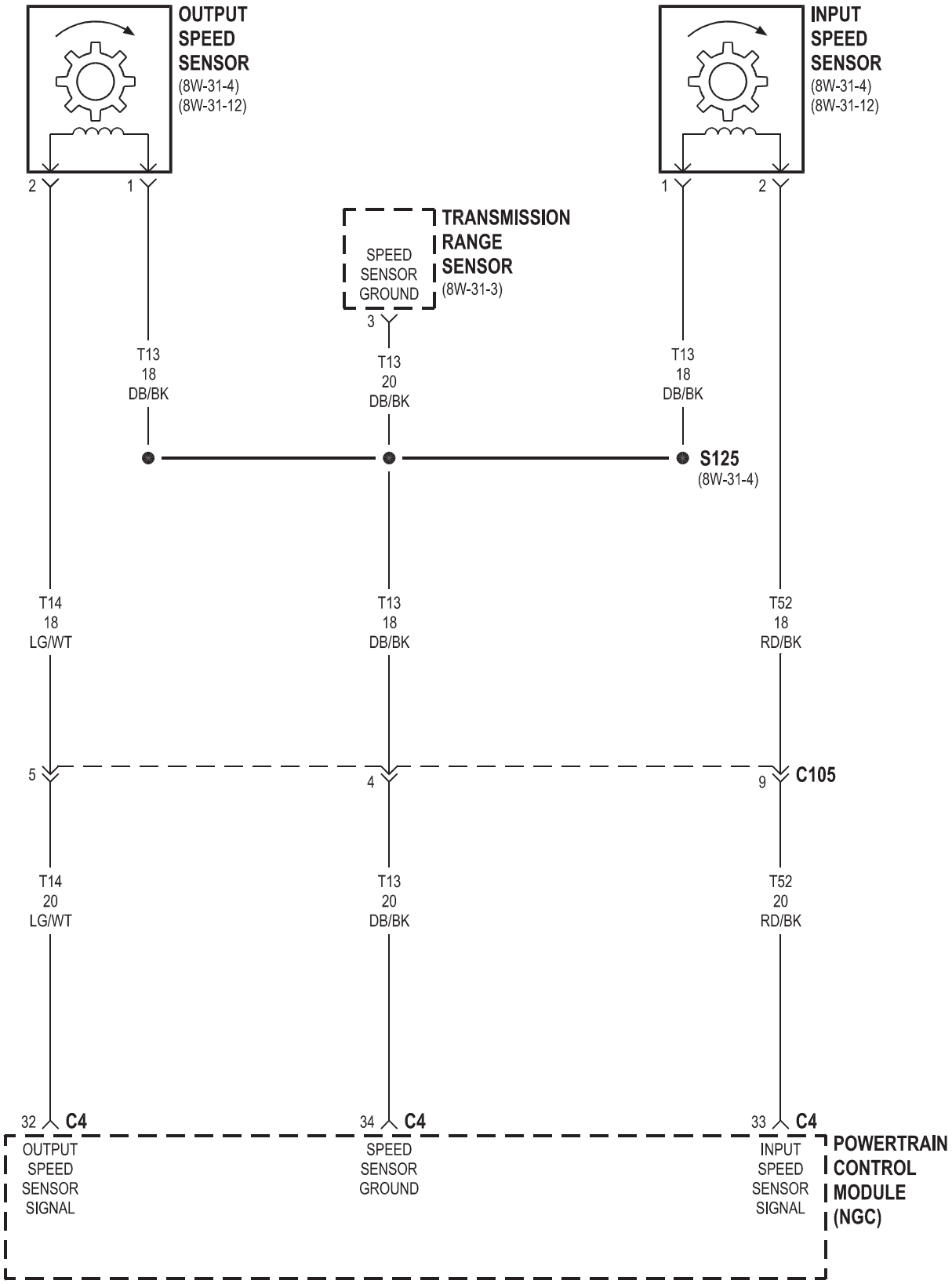
OUTPUT SPEED SENSOR
(8W-31-4)
(8W-31-12)
INPUT SPEED SENSOR
(8W-31-4)
(8W-31-12)
2
1
1
2
TRANSMISSION RANGE SENSOR
(8W-31-3)
SPEED SENSOR GROUND
3
T13 18 DB/BK
T13 20 DB/BK
T13 18 DB/BK
S125
(8W-31-4)
T14 18 LG/WT
T13 18 DB/BK
T52 18 RD/BK
5
4
9
C105
T14 20 LG/WT
T13 20 DB/BK
T52 20 RD/BK
32
C4
34
C4
33
C4
OUTPUT SPEED SENSOR SIGNAL
SPEED SENSOR GROUND
INPUT SPEED SENSOR SIGNAL
POWERTRAIN CONTROL MODULE (NGC)

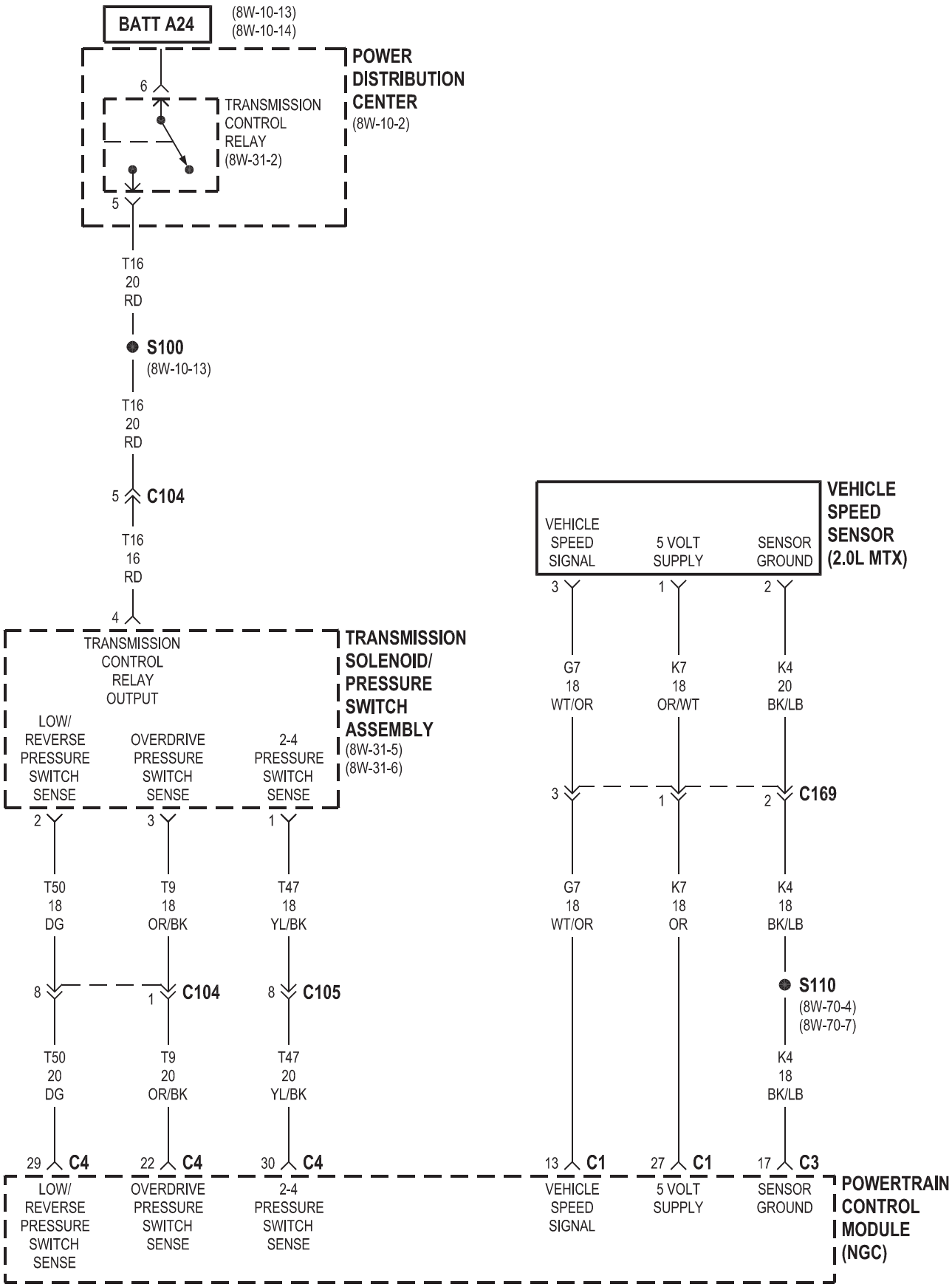
BATT A24
(8W-10-13)
(8W-10-14)
POWER DISTRIBUTION CENTER
(8W-10-2)
6
TRANSMISSION CONTROL RELAY
(8W-31-2)
5
T16
20
RD
S100
(8W-10-13)
T16
20
RD
5
C104
T16
16
RD
4
TRANSMISSION CONTROL RELAY OUTPUT
LOW/ REVERSE PRESSURE SWITCH SENSE
OVERDRIVE PRESSURE SWITCH SENSE
2-4 PRESSURE SWITCH SENSE
TRANSMISSION SOLENOID/ PRESSURE SWITCH ASSEMBLY
(8W-31-5)
(8W-31-6)
2
3
1
T50
18
DG
T9
18
OR/BK
T47
18
YL/BK
8
1
C104
8
C105
T50
20
DG
T9
20
OR/BK
T47
20
YL/BK
29
C4
22
C4
30
C4
VEHICLE SPEED SENSOR (2.0L MTX)
VEHICLE SPEED SIGNAL
5 VOLT SUPPLY
SENSOR GROUND
3
1
2
G7
18
WT/OR
K7
18
OR/WT
K4
20
BK/LB
3
1
2
C169
G7
18
WT/OR
K7
18
OR
K4
18
BK/LB
S110
(8W-70-4)
(8W-70-7)
K4
18
BK/LB
13
C1
27
C1
17
C3
LOW/ REVERSE PRESSURE SWITCH SENSE
OVERDRIVE PRESSURE SWITCH SENSE
2-4 PRESSURE SWITCH SENSE
VEHICLE SPEED SIGNAL
5 VOLT SUPPLY
SENSOR GROUND
POWERTRAIN CONTROL MODULE (NGC)

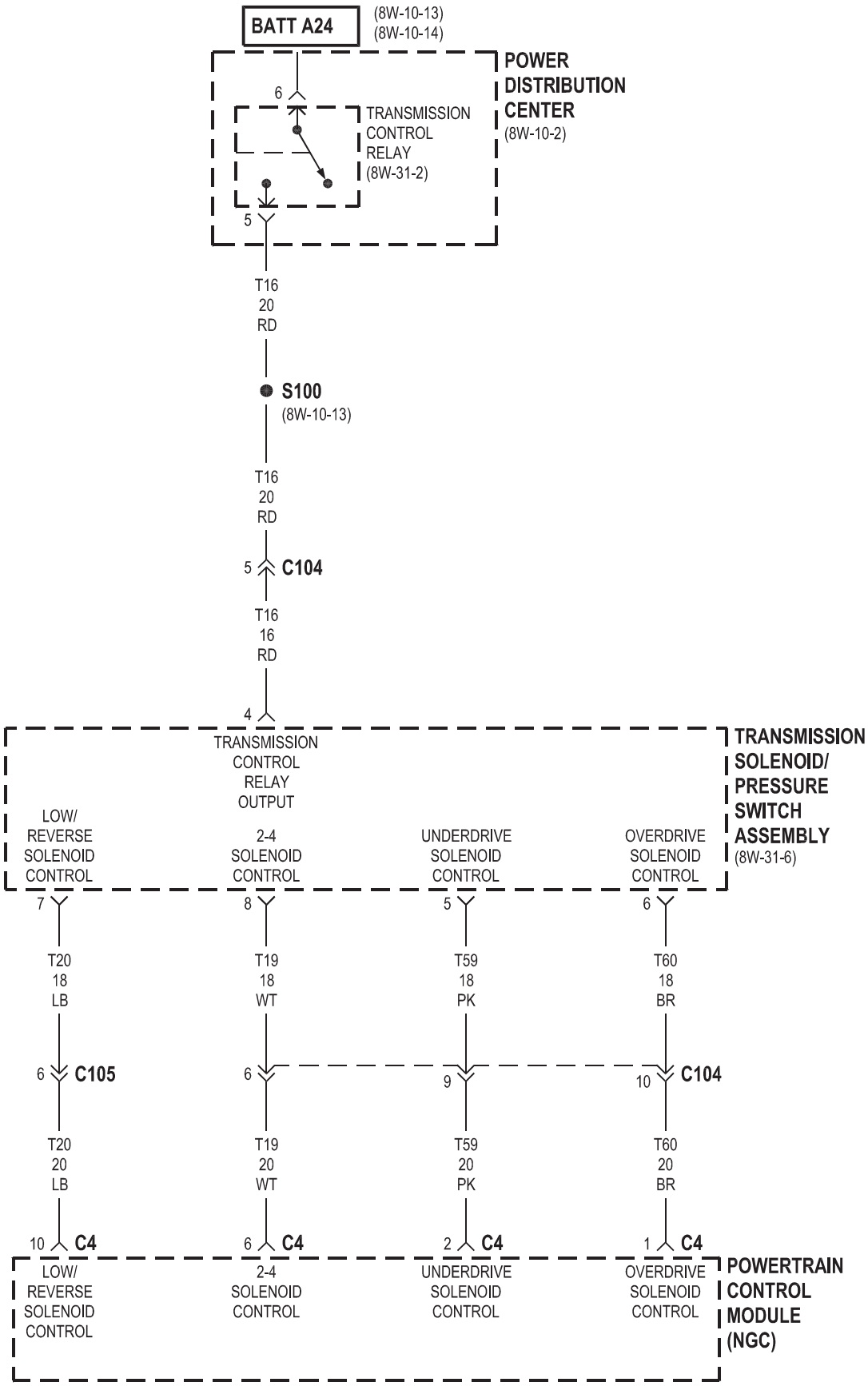
BATT A24
(8W-10-13)
(8W-10-14)
POWER DISTRIBUTION CENTER
(8W-10-2)
6
TRANSMISSION CONTROL RELAY
(8W-31-2)
5
T16
20
RD
S100
(8W-10-13)
T16
20
RD
5
C104
T16
16
RD
4
TRANSMISSION CONTROL RELAY OUTPUT
TRANSMISSION SOLENOID/ PRESSURE SWITCH ASSEMBLY
(8W-31-6)
LOW/ REVERSE SOLENOID CONTROL
2-4 SOLENOID CONTROL
UNDERDRIVE SOLENOID CONTROL
OVERDRIVE SOLENOID CONTROL
7
8
5
6
T20
18
LB
T19
18
WT
T59
18
PK
T60
18
BR
6
C105
6
9
10
C104
T20
20
LB
T19
20
WT
T59
20
PK
T60
20
BR
10
C4
6
C4
2
C4
1
C4
LOW/ REVERSE SOLENOID CONTROL
2-4 SOLENOID CONTROL
UNDERDRIVE SOLENOID CONTROL
OVERDRIVE SOLENOID CONTROL
POWERTRAIN CONTROL MODULE (NGC)

2.7L

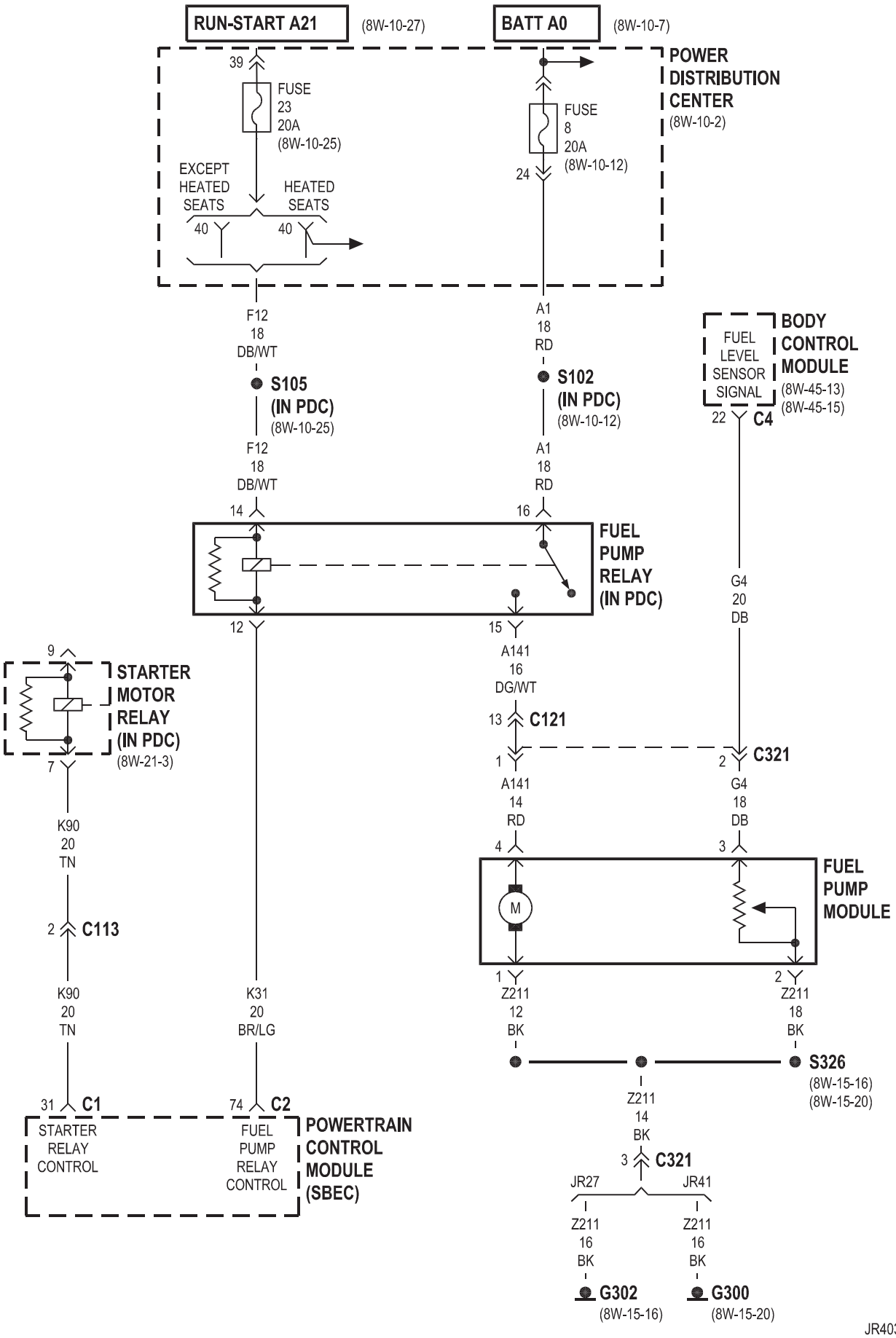
RUN-START A21
(8W-10-27)
BATT A0
(8W-10-7)
POWER DISTRIBUTION CENTER
(8W-10-2)
39
FUSE 23 20A
(8W-10-25)
FUSE 8 20A
(8W-10-12)
24
EXCEPT HEATED SEATS
HEATED SEATS
40
40
F12 18 DB/WT
A1 18 RD
S105 (IN PDC)
(8W-10-25)
S102 (IN PDC)
(8W-10-12)
BODY CONTROL MODULE
(8W-45-13)
(8W-45-15)
FUEL LEVEL SENSOR SIGNAL
22
C4
F12 18 DB/WT
A1 18 RD
14
16
FUEL PUMP RELAY (IN PDC)
12
15
G4 20 DB
9
STARTER MOTOR RELAY (IN PDC)
(8W-21-3)
7
A141 16 DG/WT
13
C121
1
2
C321
A141 14 RD
G4 18 DB
4
3
FUEL PUMP MODULE
M
K90 20 TN
2
C113
1
2
Z211 12 BK
Z211 18 BK
K90 20 TN
K31 20 BR/LG
S326
(8W-15-16)
(8W-15-20)
31
C1
74
C2
STARTER RELAY CONTROL
FUEL PUMP RELAY CONTROL
POWERTRAIN CONTROL MODULE (SBEC)
Z211 14 BK
3
C321
JR27
JR41
Z211 16 BK
Z211 16 BK
G302
(8W-15-16)
G300
(8W-15-20)

2.7L

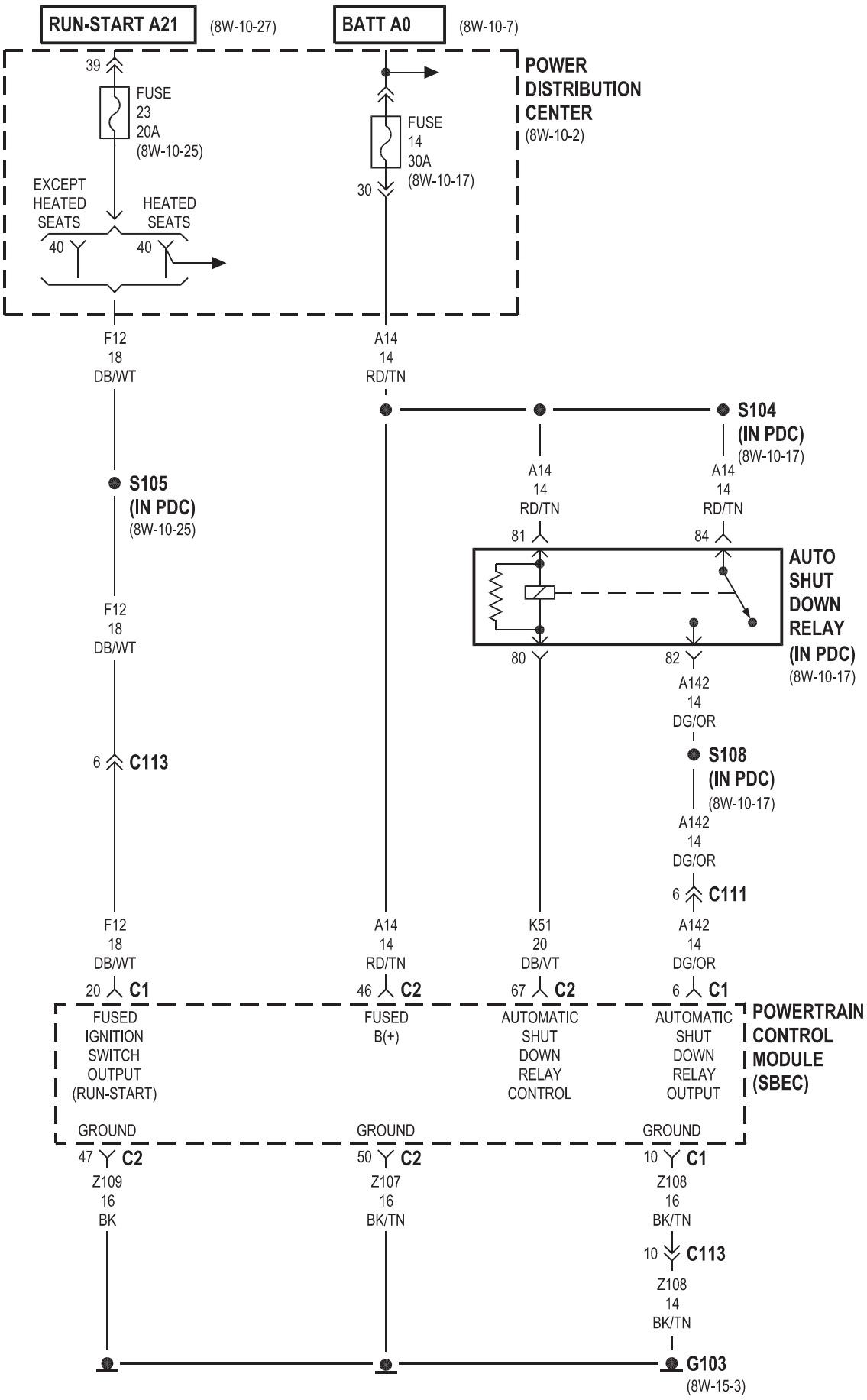
RUN-START A21
(8W-10-27)
BATT A0
(8W-10-7)
POWER DISTRIBUTION CENTER
(8W-10-2)
39
FUSE 23 20A (8W-10-25)
FUSE 14 30A (8W-10-17)
30
EXCEPT HEATED SEATS
HEATED SEATS
40
40
F12 18 DB/WT
A14 14 RD/TN
S104 (IN PDC)
(8W-10-17)
S105 (IN PDC)
(8W-10-25)
A14 14 RD/TN
A14 14 RD/TN
81
84
AUTO SHUT DOWN RELAY (IN PDC)
(8W-10-17)
80
82
F12 18 DB/WT
A142 14 DG/OR
6 C113
S108 (IN PDC)
(8W-10-17)
A142 14 DG/OR
6 C111
F12 18 DB/WT
A14 14 RD/TN
K51 20 DB/VT
A142 14 DG/OR
20 C1
46 C2
67 C2
6 C1
FUSED IGNITION SWITCH OUTPUT (RUN-START)
FUSED B(+)
AUTOMATIC SHUT DOWN RELAY CONTROL
AUTOMATIC SHUT DOWN RELAY OUTPUT
POWERTRAIN CONTROL MODULE (SBEC)
GROUND
GROUND
GROUND
47 C2
50 C2
10 C1
Z109 16 BK
Z107 16 BK/TN
Z108 16 BK/TN
10 C113
Z108 14 BK/TN
G103
(8W-15-3)

2.7L

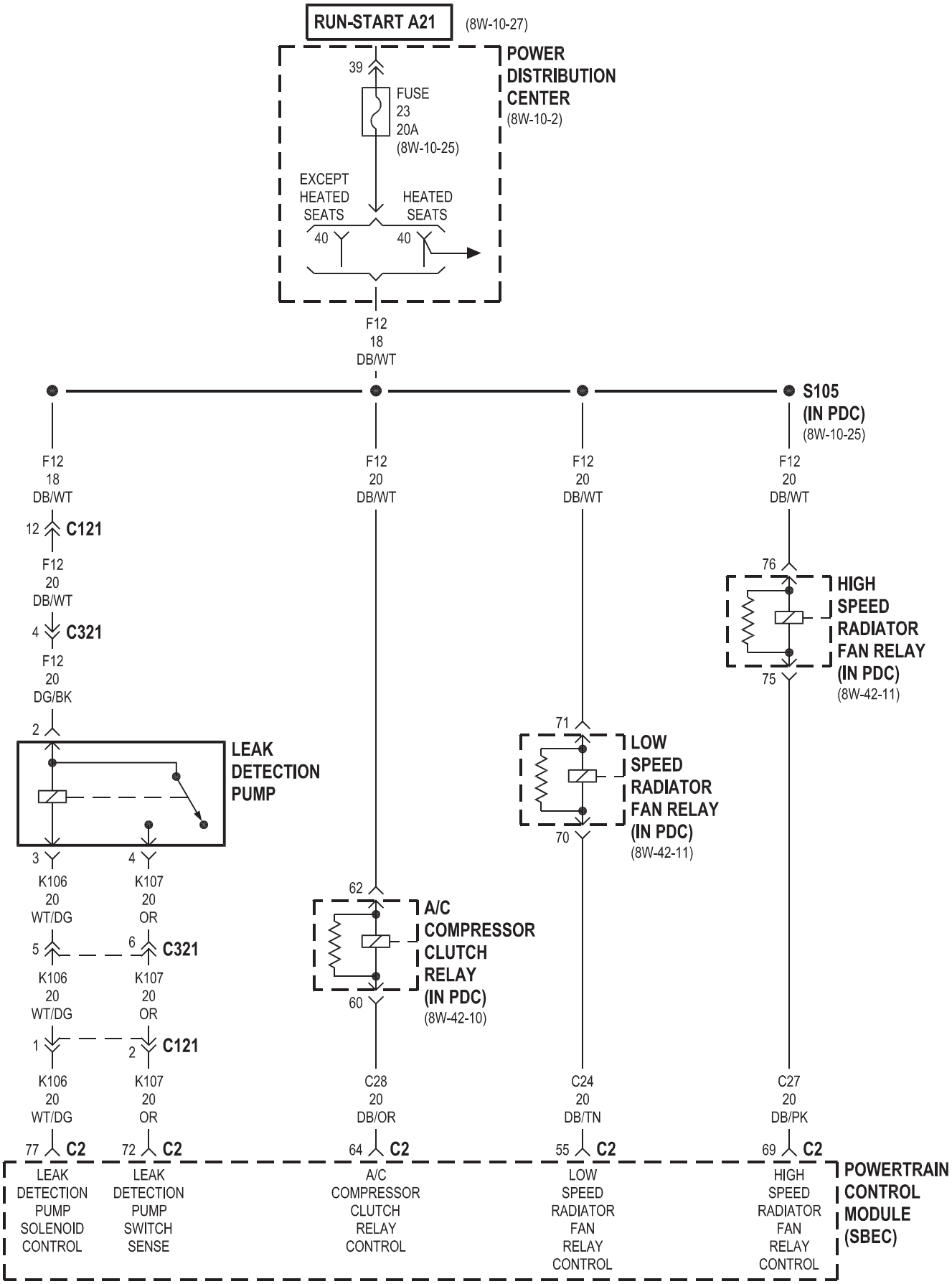
RUN-START A21
(8W-10-27)
POWER DISTRIBUTION CENTER
(8W-10-2)
39
FUSE 23 20A
(8W-10-25)
EXCEPT HEATED SEATS
HEATED SEATS
40
40
F12 18 DB/WT
S105 (IN PDC)
(8W-10-25)
F12 18 DB/WT
F12 20 DB/WT
F12 20 DB/WT
F12 20 DB/WT
12 C121
F12 20 DB/WT
4 C321
F12 20 DG/BK
2
LEAK DETECTION PUMP
3
4
K106 20 WT/DG
K107 20 OR
5
6 C321
K106 20 WT/DG
K107 20 OR
1
2 C121
K106 20 WT/DG
K107 20 OR
76
HIGH SPEED RADIATOR FAN RELAY (IN PDC)
(8W-42-11)
75
71
LOW SPEED RADIATOR FAN RELAY (IN PDC)
(8W-42-11)
70
62
A/C COMPRESSOR CLUTCH RELAY (IN PDC)
(8W-42-10)
60
C28 20 DB/OR
C24 20 DB/TN
C27 20 DB/PK
77 C2
72 C2
64 C2
55 C2
69 C2
LEAK DETECTION PUMP SOLENOID CONTROL
LEAK DETECTION PUMP SWITCH SENSE
A/C COMPRESSOR CLUTCH RELAY CONTROL
LOW SPEED RADIATOR FAN RELAY CONTROL
HIGH SPEED RADIATOR FAN RELAY CONTROL
POWERTRAIN CONTROL MODULE (SBEC)

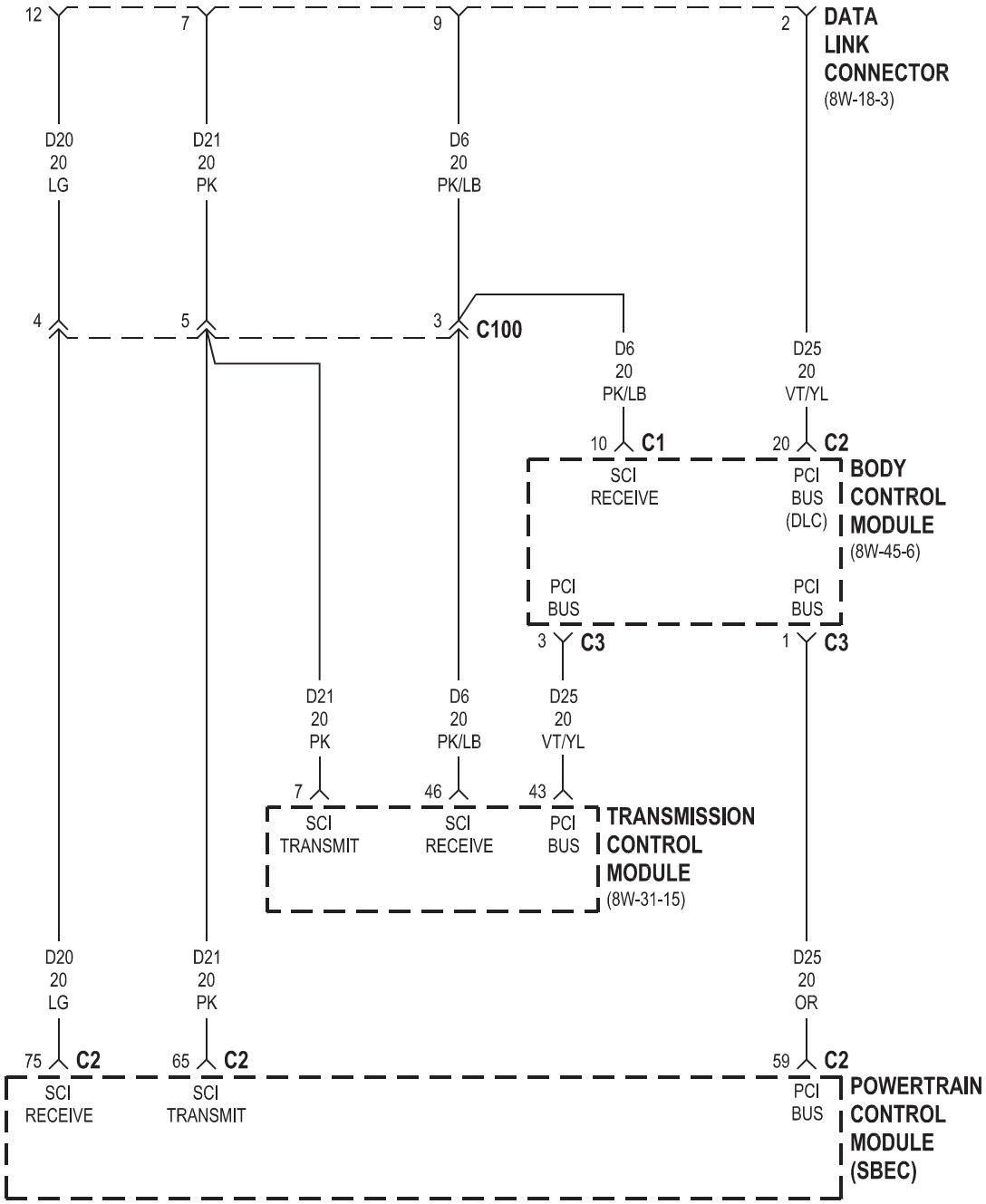
12
7
9
2
DATA LINK CONNECTOR
(8W-18-3)
D20 20 LG
D21 20 PK
D6 20 PK/LB
4
5
3
C100
D6 20 PK/LB
D25 20 VT/YL
10
C1
20
C2
SCI RECEIVE
PCI BUS (DLC)
BODY CONTROL MODULE
(8W-45-6)
PCI BUS
PCI BUS
3
C3
1
C3
D21 20 PK
D6 20 PK/LB
D25 20 VT/YL
7
46
43
SCI TRANSMIT
SCI RECEIVE
PCI BUS
TRANSMISSION CONTROL MODULE
(8W-31-15)
D20 20 LG
D21 20 PK
D25 20 OR
75
C2
65
C2
59
C2
SCI RECEIVE
SCI TRANSMIT
PCI BUS
POWERTRAIN CONTROL MODULE (SBEC)

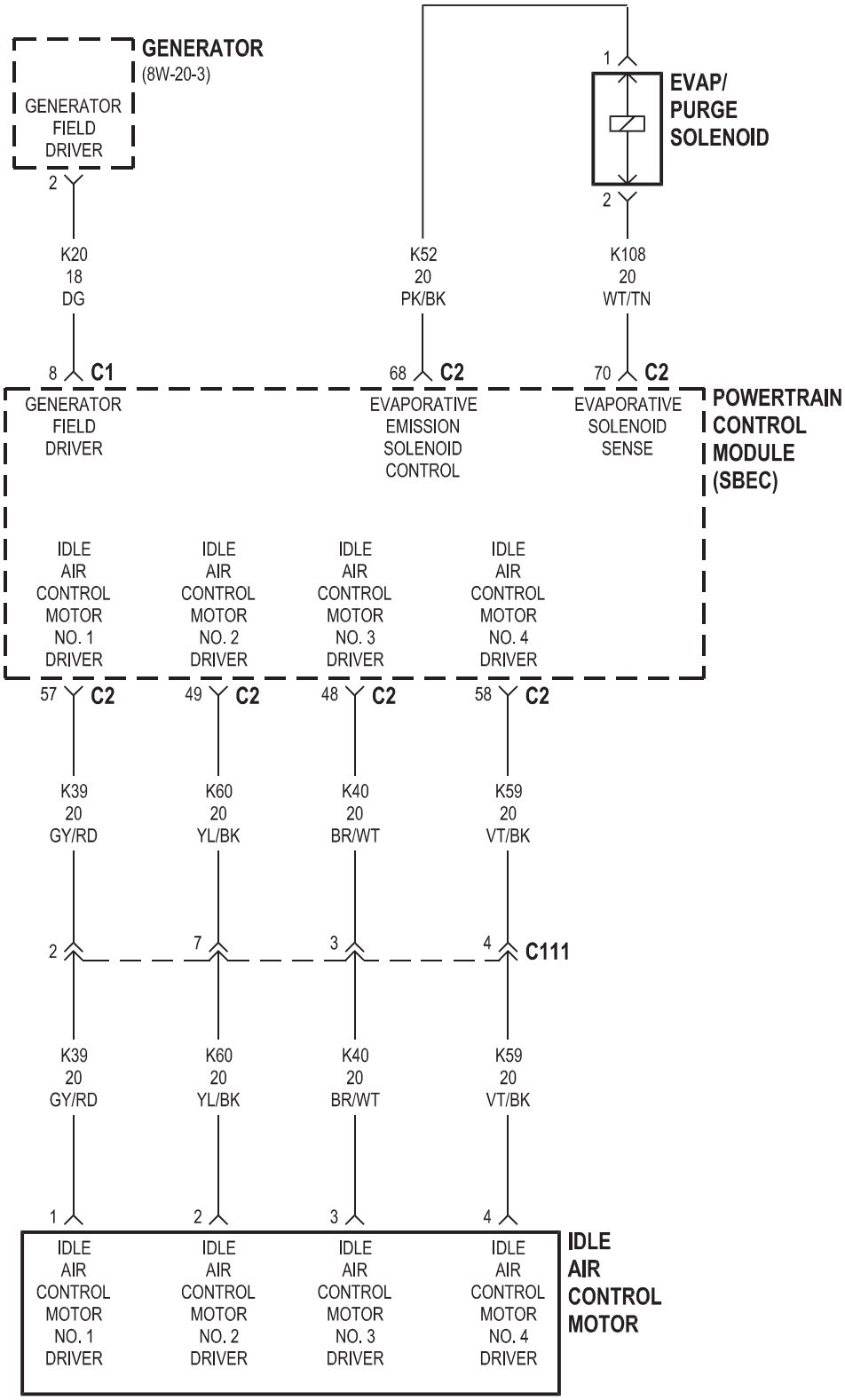
GENERATOR
(8W-20-3)
GENERATOR FIELD DRIVER
2
K20
18
DG
8
C1
GENERATOR FIELD DRIVER
K52
20
PK/BK
68
C2
EVAPORATIVE EMISSION SOLENOID CONTROL
1
EVAP/ PURGE SOLENOID
2
K108
20
WT/TN
70
C2
EVAPORATIVE SOLENOID SENSE
POWERTRAIN CONTROL MODULE (SBEC)
IDLE AIR CONTROL MOTOR NO. 1 DRIVER
IDLE AIR CONTROL MOTOR NO. 2 DRIVER
IDLE AIR CONTROL MOTOR NO. 3 DRIVER
IDLE AIR CONTROL MOTOR NO. 4 DRIVER
57 C2
49 C2
48 C2
58 C2
K39
20
GY/RD
K60
20
YL/BK
K40
20
BR/WT
K59
20
VT/BK
2
7
3
4
C111
K39
20
GY/RD
K60
20
YL/BK
K40
20
BR/WT
K59
20
VT/BK
1
2
3
4
IDLE AIR CONTROL MOTOR NO. 1 DRIVER
IDLE AIR CONTROL MOTOR NO. 2 DRIVER
IDLE AIR CONTROL MOTOR NO. 3 DRIVER
IDLE AIR CONTROL MOTOR NO. 4 DRIVER
IDLE AIR CONTROL MOTOR

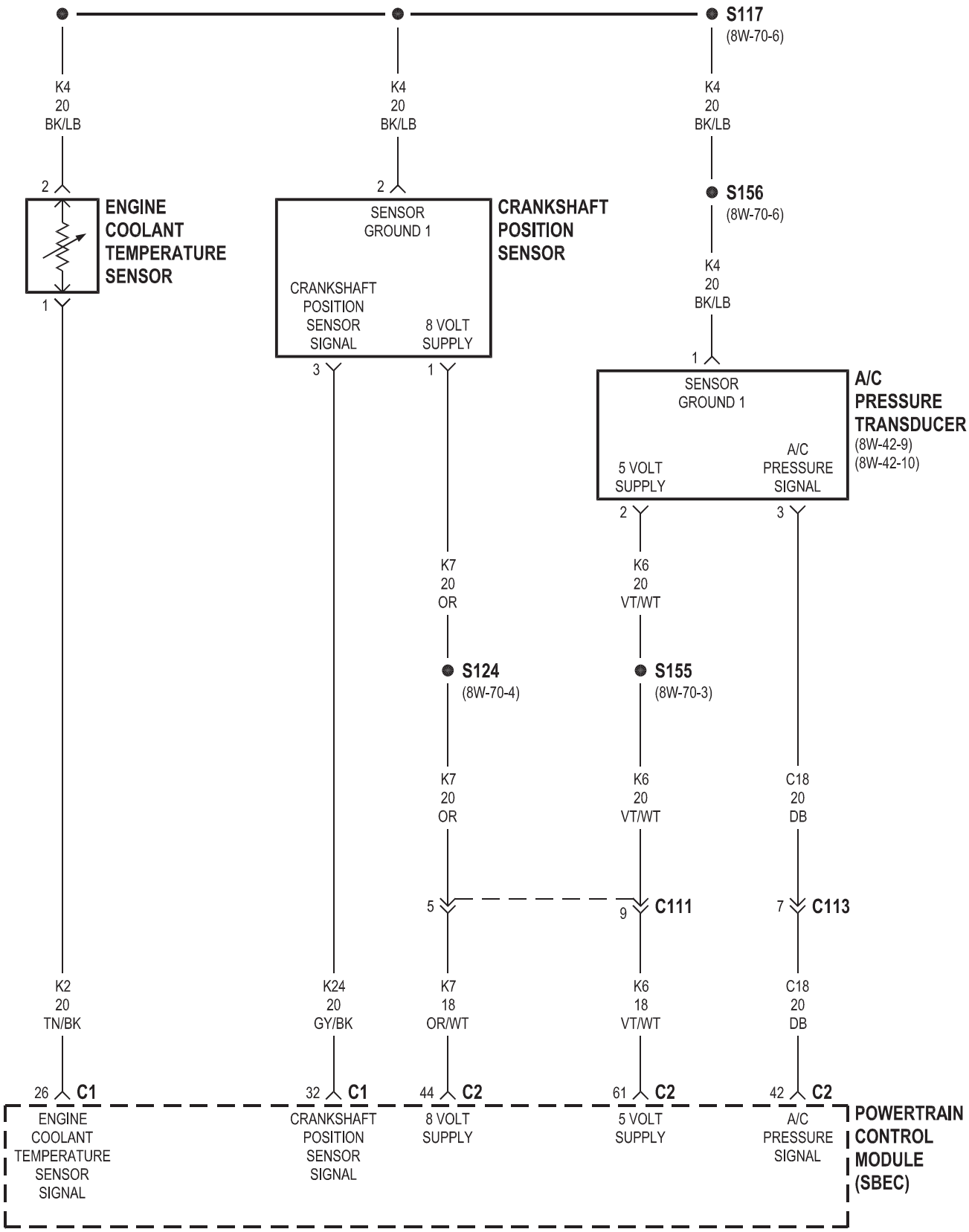
S117
(8W-70-6)
K4
20
BK/LB
K4
20
BK/LB
K4
20
BK/LB
2
2
S156
(8W-70-6)
ENGINE
COOLANT
TEMPERATURE
SENSOR
1
SENSOR
GROUND 1
CRANKSHAFT
POSITION
SENSOR
CRANKSHAFT
POSITION
SENSOR
SIGNAL
8 VOLT
SUPPLY
3
1
K4
20
BK/LB
1
SENSOR
GROUND 1
A/C
PRESSURE
TRANSDUCER
(8W-42-9)
(8W-42-10)
5 VOLT
SUPPLY
A/C
PRESSURE
SIGNAL
2
3
K7
20
OR
K6
20
VT/WT
S124
(8W-70-4)
S155
(8W-70-3)
K7
20
OR
K6
20
VT/WT
C18
20
DB
5
9
C111
7
C113
K2
20
TN/BK
K24
20
GY/BK
K7
18
OR/WT
K6
18
VT/WT
C18
20
DB
26
C1
32
C1
44
C2
61
C2
42
C2
ENGINE
COOLANT
TEMPERATURE
SENSOR
SIGNAL
CRANKSHAFT
POSITION
SENSOR
SIGNAL
8 VOLT
SUPPLY
5 VOLT
SUPPLY
A/C
PRESSURE
SIGNAL
POWERTRAIN
CONTROL
MODULE
(SBEC)

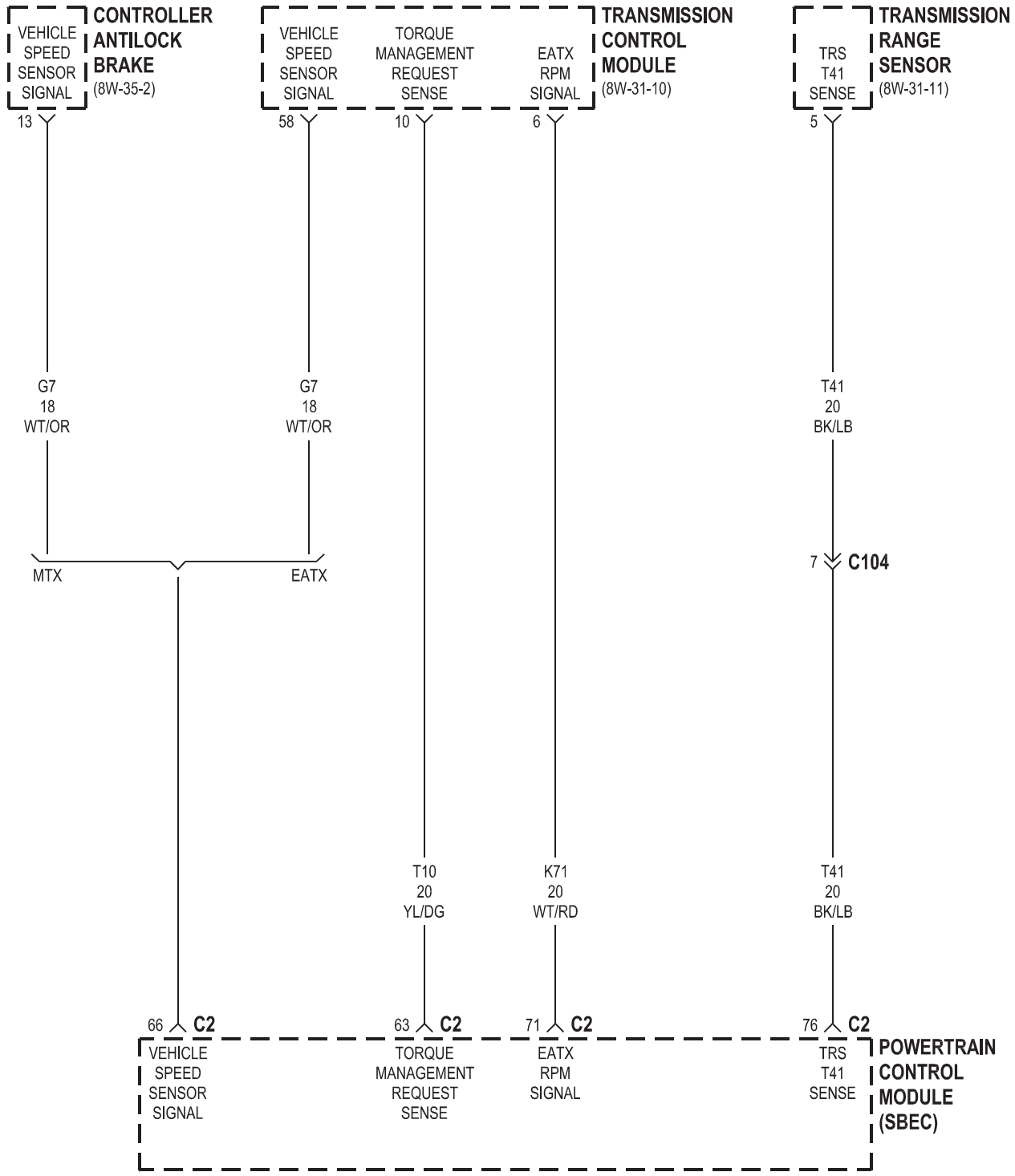
CONTROLLER ANTILOCK BRAKE
(8W-35-2)
VEHICLE SPEED SENSOR SIGNAL
13
TRANSMISSION CONTROL MODULE
(8W-31-10)
VEHICLE SPEED SENSOR SIGNAL
58
TORQUE MANAGEMENT REQUEST SENSE
10
EATX RPM SIGNAL
6
TRANSMISSION RANGE SENSOR
(8W-31-11)
TRS T41 SENSE
5
G7
18
WT/OR
G7
18
WT/OR
T41
20
BK/LB
MTX
EATX
7
C104
T10
20
YL/DG
K71
20
WT/RD
T41
20
BK/LB
66
C2
VEHICLE SPEED SENSOR SIGNAL
63
C2
TORQUE MANAGEMENT REQUEST SENSE
71
C2
EATX RPM SIGNAL
76
C2
TRS T41 SENSE
POWERTRAIN CONTROL MODULE (SBEC)

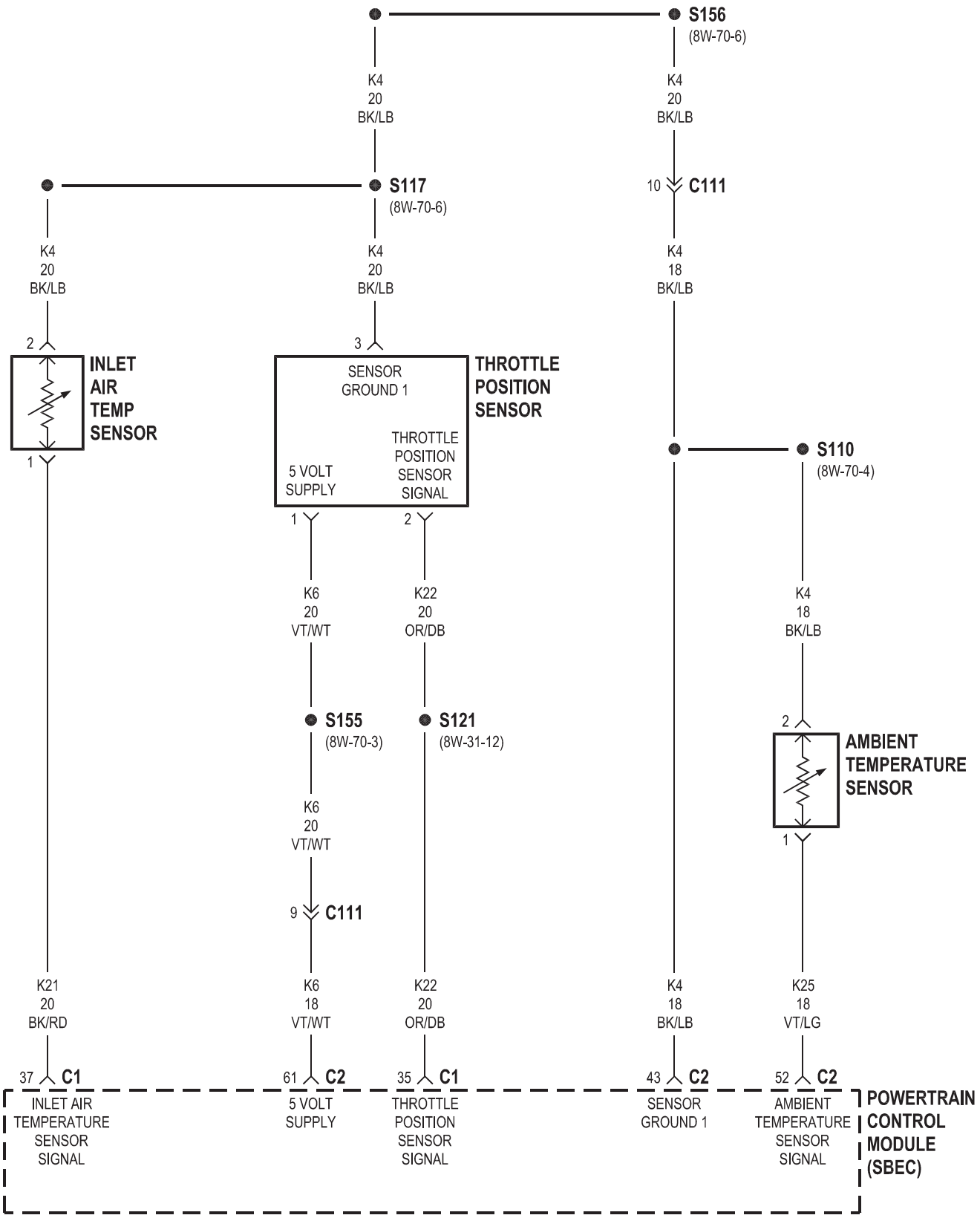
S156
(8W-70-6)
K4
20
BK/LB
K4
20
BK/LB
S117
(8W-70-6)
10
C111
K4
20
BK/LB
K4
20
BK/LB
K4
18
BK/LB
2
3
INLET
AIR
TEMP
SENSOR
1
SENSOR
GROUND 1
THROTTLE
POSITION
SENSOR
5 VOLT
SUPPLY
THROTTLE
POSITION
SENSOR
SIGNAL
S110
(8W-70-4)
1
2
K6
20
VT/WT
K22
20
OR/DB
K4
18
BK/LB
S155
(8W-70-3)
S121
(8W-31-12)
2
AMBIENT
TEMPERATURE
SENSOR
1
K6
20
VT/WT
9
C111
K21
20
BK/RD
K6
18
VT/WT
K22
20
OR/DB
K4
18
BK/LB
K25
18
VT/LG
37
C1
INLET AIR
TEMPERATURE
SENSOR
SIGNAL
61
C2
5 VOLT
SUPPLY
35
C1
THROTTLE
POSITION
SENSOR
SIGNAL
43
C2
SENSOR
GROUND 1
52
C2
AMBIENT
TEMPERATURE
SENSOR
SIGNAL
POWERTRAIN
CONTROL
MODULE
(SBEC)

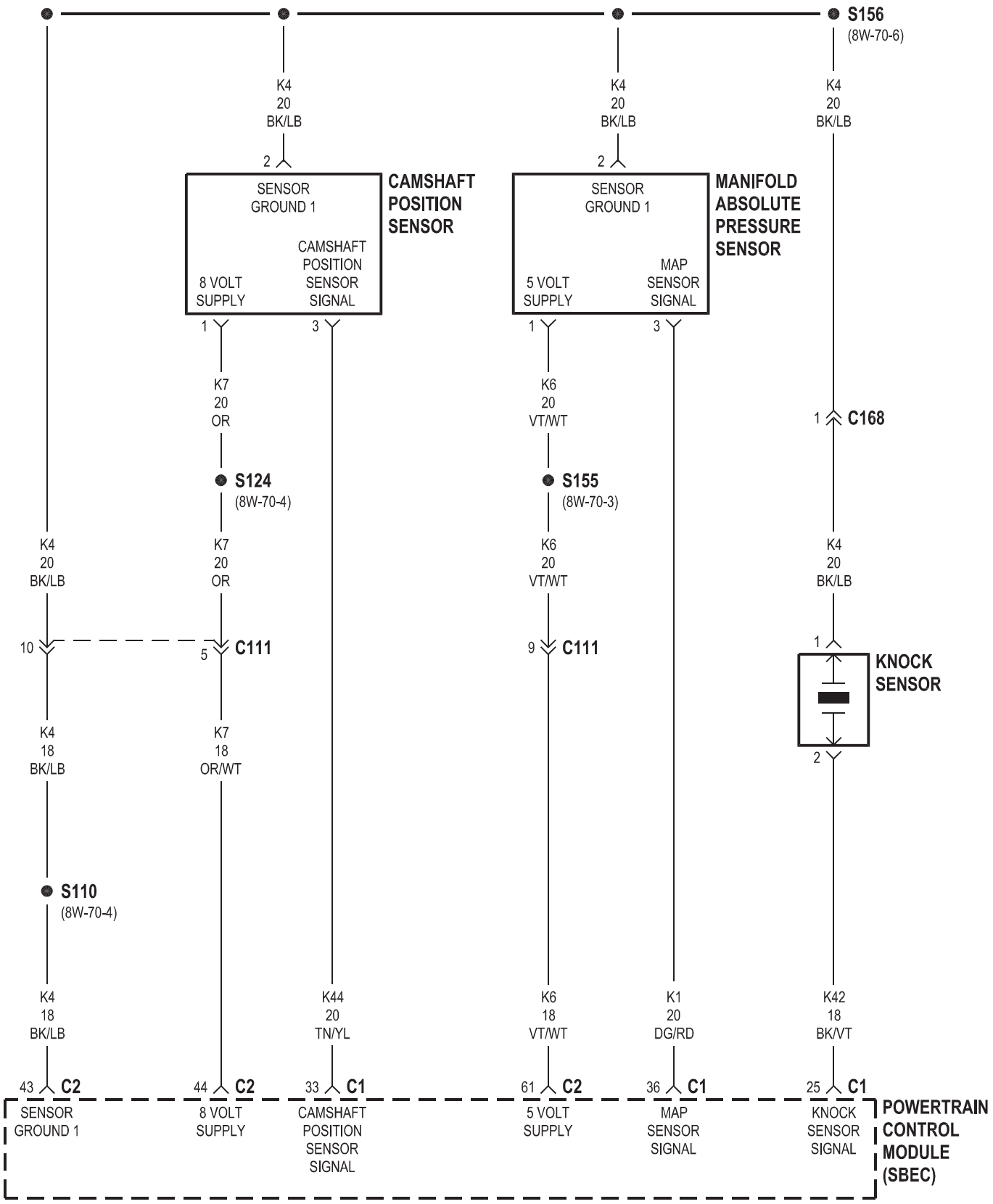
S156
(8W-70-6)
K4
20
BK/LB
2
SENSOR
GROUND 1
CAMSHAFT
POSITION
SENSOR
SIGNAL
8 VOLT
SUPPLY
CAMSHAFT
POSITION
SENSOR
1
3
K7
20
OR
S124
(8W-70-4)
K4
20
BK/LB
10
5
C111
K4
18
BK/LB
K7
18
OR/WT
S110
(8W-70-4)
K4
18
BK/LB
K44
20
TN/YL
43
C2
44
C2
33
C1
SENSOR
GROUND 1
8 VOLT
SUPPLY
CAMSHAFT
POSITION
SENSOR
SIGNAL
MANIFOLD
ABSOLUTE
PRESSURE
SENSOR
5 VOLT
SUPPLY
MAP
SENSOR
SIGNAL
K6
20
VT/WT
S155
(8W-70-3)
K6
20
VT/WT
9
C111
K6
18
VT/WT
K1
20
DG/RD
61
C2
36
C1
5 VOLT
SUPPLY
MAP
SENSOR
SIGNAL
C168
KNOCK
SENSOR
K42
18
BK/VT
25
C1
KNOCK
SENSOR
SIGNAL
POWERTRAIN
CONTROL
MODULE
(SBEC)

2.7L

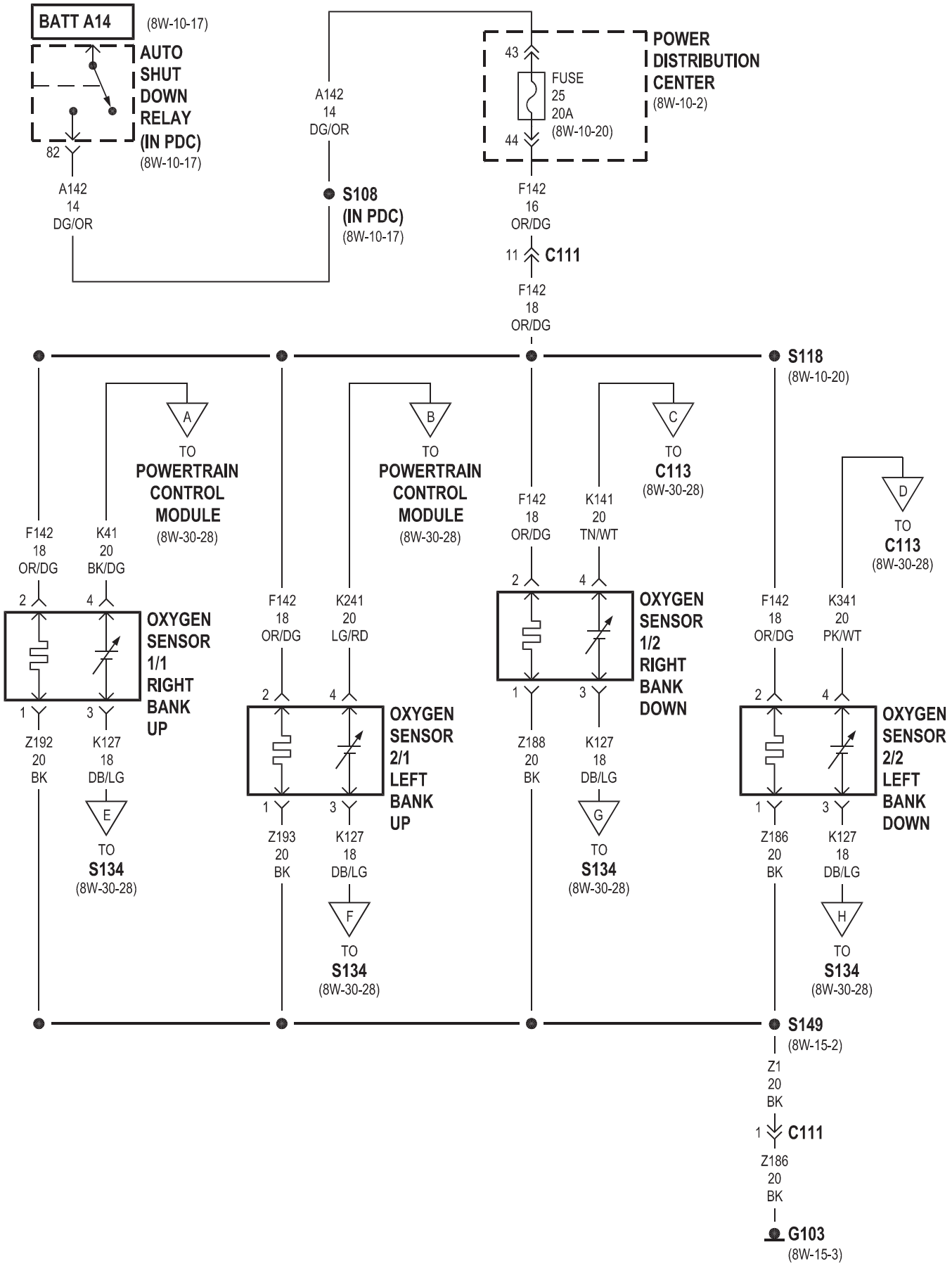
BATT A14
(8W-10-17)
AUTO SHUT DOWN RELAY (IN PDC)
(8W-10-17)
82
A142 14 DG/OR
A142 14 DG/OR
S108 (IN PDC)
(8W-10-17)
43
44
FUSE 25 20A
(8W-10-20)
POWER DISTRIBUTION CENTER
(8W-10-2)
F142 16 OR/DG
11
C111
F142 18 OR/DG
S118
(8W-10-20)
A
TO POWERTRAIN CONTROL MODULE
(8W-30-28)
B
TO POWERTRAIN CONTROL MODULE
(8W-30-28)
C
TO C113
(8W-30-28)
D
TO C113
(8W-30-28)
F142 18 OR/DG
K41 20 BK/DG
OXYGEN SENSOR 1/1 RIGHT BANK UP
Z192 20 BK
K127 18 DB/LG
E
TO S134
(8W-30-28)
F142 18 OR/DG
K241 20 LG/RD
OXYGEN SENSOR 2/1 LEFT BANK UP
Z193 20 BK
K127 18 DB/LG
F
TO S134
(8W-30-28)
F142 18 OR/DG
K141 20 TN/WT
OXYGEN SENSOR 1/2 RIGHT BANK DOWN
Z188 20 BK
K127 18 DB/LG
G
TO S134
(8W-30-28)
F142 18 OR/DG
K341 20 PK/WT
OXYGEN SENSOR 2/2 LEFT BANK DOWN
Z186 20 BK
K127 18 DB/LG
H
TO S134
(8W-30-28)
S149
(8W-15-2)
Z1 20 BK
1
C111
Z186 20 BK
G103
(8W-15-3)

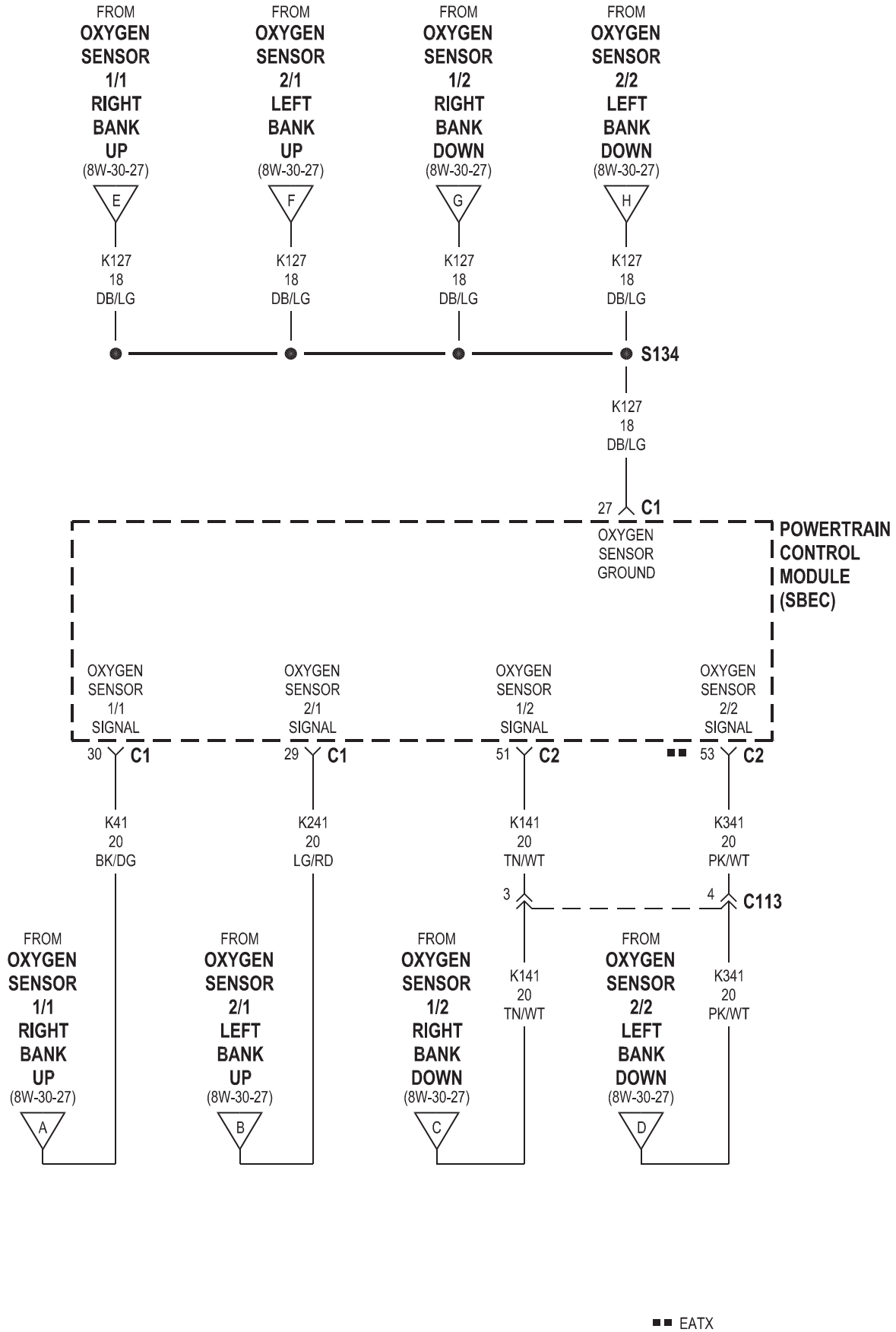
FROM OXYGEN SENSOR 1/1 RIGHT BANK UP (8W-30-27)
FROM OXYGEN SENSOR 2/1 LEFT BANK UP (8W-30-27)
FROM OXYGEN SENSOR 1/2 RIGHT BANK DOWN (8W-30-27)
FROM OXYGEN SENSOR 2/2 LEFT BANK DOWN (8W-30-27)
E
F
G
H
K127 18 DB/LG
S134
27 C1
OXYGEN SENSOR GROUND
POWERTRAIN CONTROL MODULE (SBEC)
OXYGEN SENSOR 1/1 SIGNAL
OXYGEN SENSOR 2/1 SIGNAL
OXYGEN SENSOR 1/2 SIGNAL
OXYGEN SENSOR 2/2 SIGNAL
30 C1
29 C1
51 C2
53 C2
K41 20 BK/DG
K241 20 LG/RD
K141 20 TN/WT
K341 20 PK/WT
3
4
C113
A
B
C
D

■■ EATX

2.7L

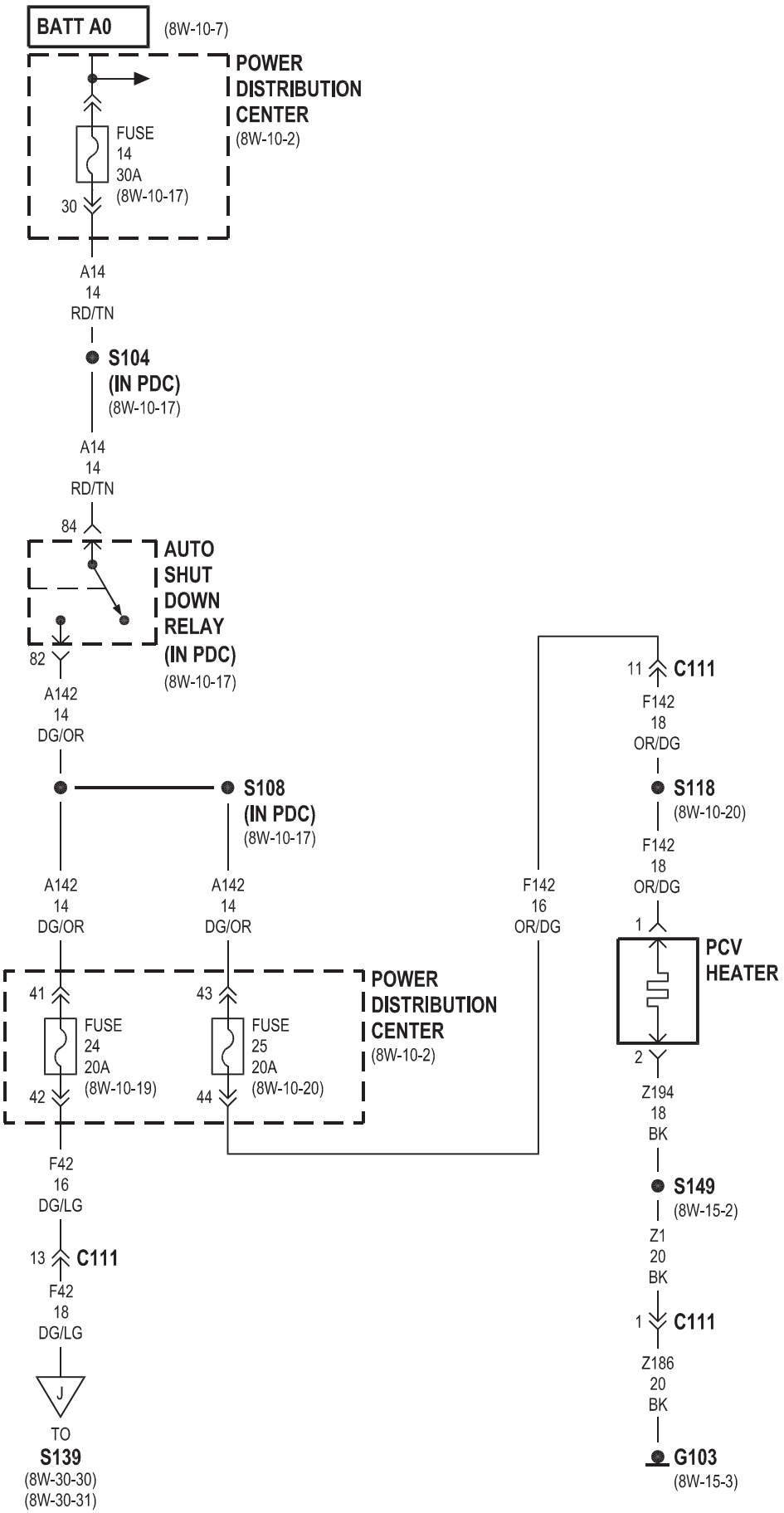
BATT A0
(8W-10-7)
POWER DISTRIBUTION CENTER
(8W-10-2)
FUSE 14 30A
(8W-10-17)
30
A14 14 RD/TN
S104 (IN PDC)
(8W-10-17)
A14 14 RD/TN
84
AUTO SHUT DOWN RELAY (IN PDC)
(8W-10-17)
82
A142 14 DG/OR
S108 (IN PDC)
(8W-10-17)
A142 14 DG/OR
A142 14 DG/OR
F142 16 OR/DG
11
C111
F142 18 OR/DG
S118
(8W-10-20)
F142 18 OR/DG
1
PCV HEATER
2
Z194 18 BK
S149
(8W-15-2)
Z1 20 BK
1
C111
Z186 20 BK
G103
(8W-15-3)
POWER DISTRIBUTION CENTER
(8W-10-2)
41
FUSE 24 20A
(8W-10-19)
42
43
FUSE 25 20A
(8W-10-20)
44
F42 16 DG/LG
13
C111
F42 18 DG/LG
J
TO
S139
(8W-30-30)
(8W-30-31)

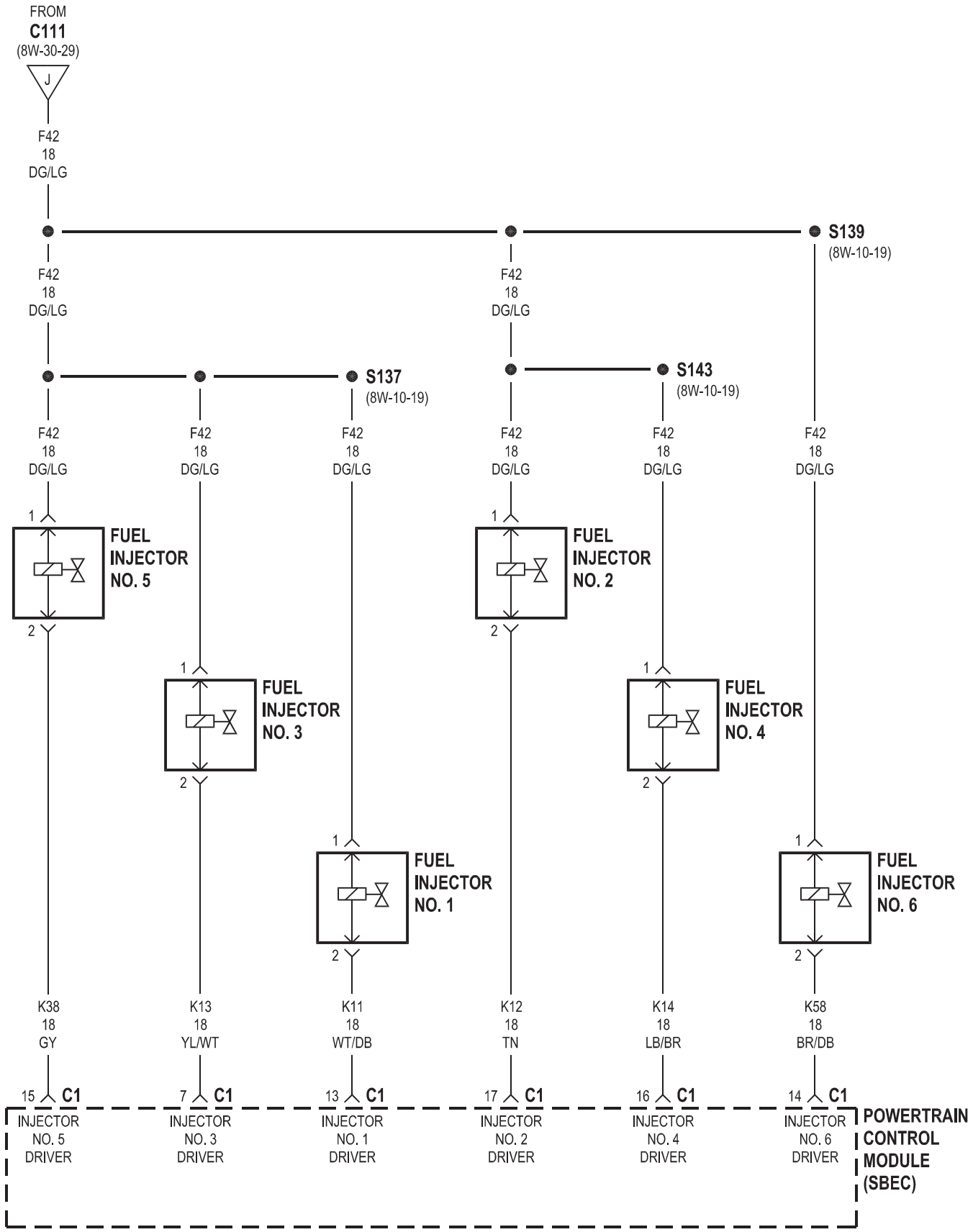
FROM
C111
(8W-30-29)
J
F42
18
DG/LG
S139
(8W-10-19)
S137
(8W-10-19)
S143
(8W-10-19)
FUEL INJECTOR NO. 5
FUEL INJECTOR NO. 2
FUEL INJECTOR NO. 3
FUEL INJECTOR NO. 4
FUEL INJECTOR NO. 1
FUEL INJECTOR NO. 6
K38
18
GY
K13
18
YL/WT
K11
18
WT/DB
K12
18
TN
K14
18
LB/BR
K58
18
BR/DB
15 C1
INJECTOR NO. 5 DRIVER
7 C1
INJECTOR NO. 3 DRIVER
13 C1
INJECTOR NO. 1 DRIVER
17 C1
INJECTOR NO. 2 DRIVER
16 C1
INJECTOR NO. 4 DRIVER
14 C1
INJECTOR NO. 6 DRIVER
POWERTRAIN CONTROL MODULE (SBEC)

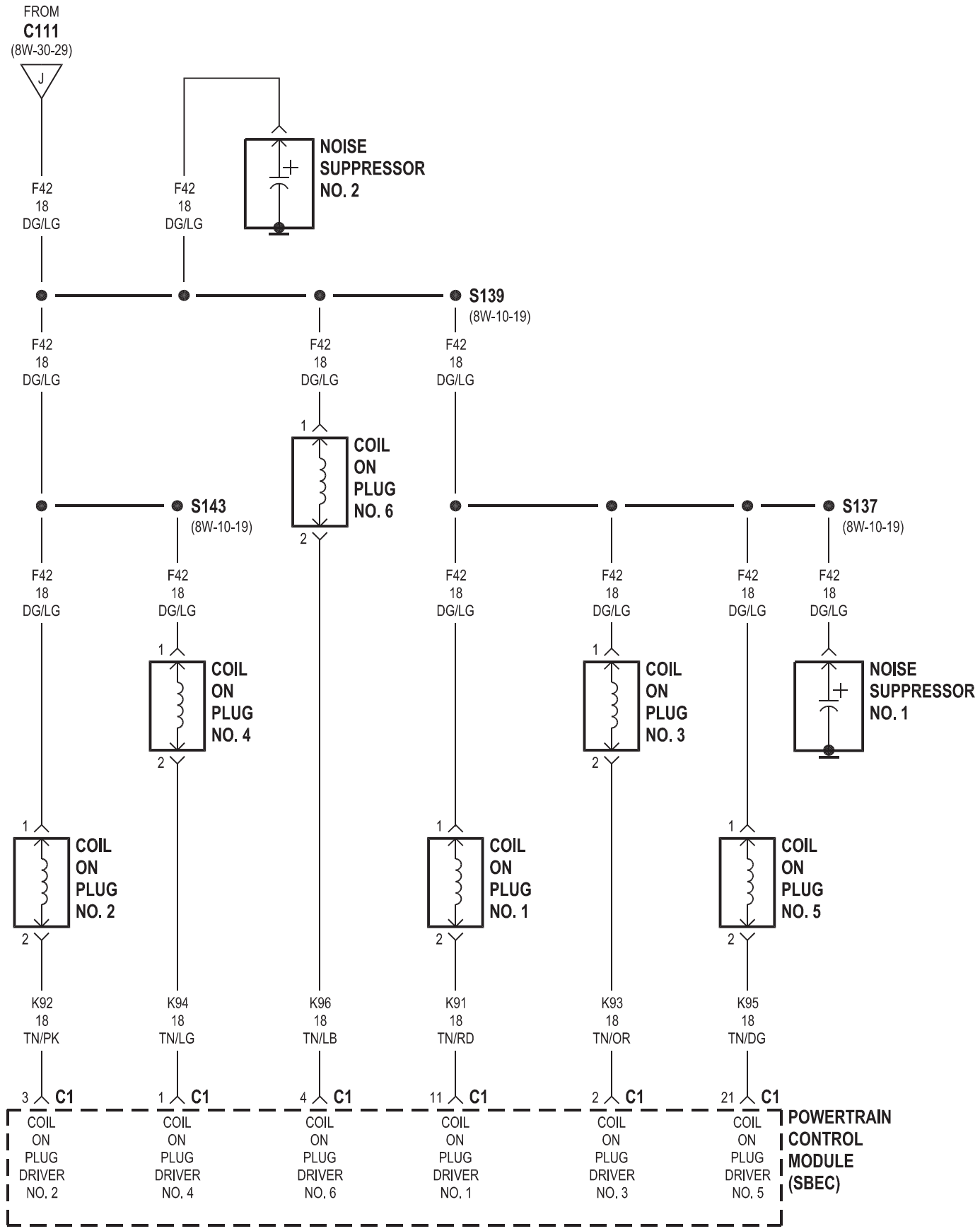
FROM
C111
(8W-30-29)
J
F42
18
DG/LG
NOISE
SUPPRESSOR
NO. 2
S139
(8W-10-19)
COIL
ON
PLUG
NO. 6
S143
(8W-10-19)
S137
(8W-10-19)
COIL
ON
PLUG
NO. 4
COIL
ON
PLUG
NO. 3
NOISE
SUPPRESSOR
NO. 1
COIL
ON
PLUG
NO. 2
COIL
ON
PLUG
NO. 1
COIL
ON
PLUG
NO. 5
K92
18
TN/PK
K94
18
TN/LG
K96
18
TN/LB
K91
18
TN/RD
K93
18
TN/OR
K95
18
TN/DG
C1
COIL
ON
PLUG
DRIVER
NO. 2
COIL
ON
PLUG
DRIVER
NO. 4
COIL
ON
PLUG
DRIVER
NO. 6
COIL
ON
PLUG
DRIVER
NO. 1
COIL
ON
PLUG
DRIVER
NO. 3
COIL
ON
PLUG
DRIVER
NO. 5
POWERTRAIN
CONTROL
MODULE
(SBEC)

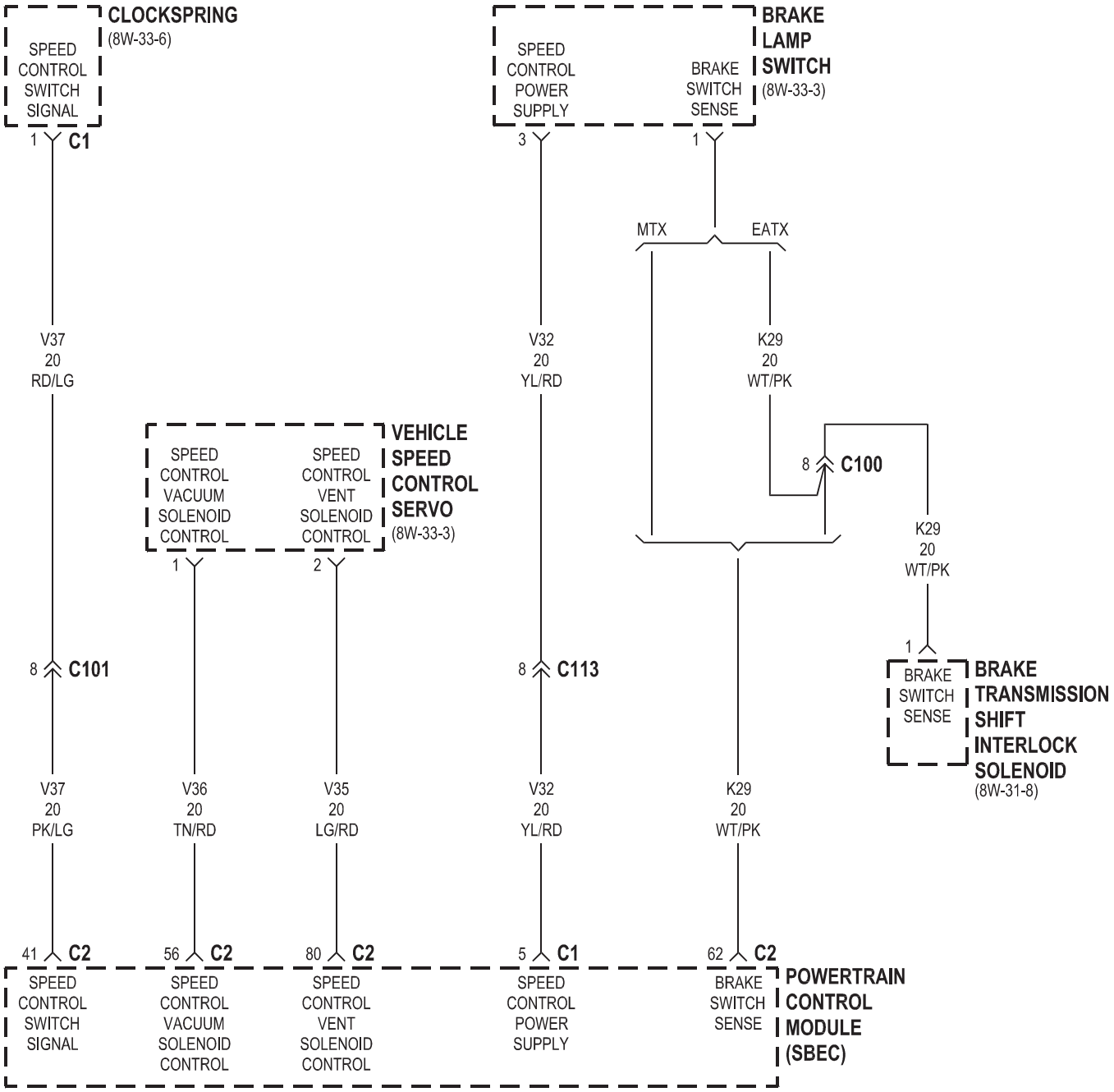
CLOCKSPRING
(8W-33-6)
SPEED CONTROL SWITCH SIGNAL
1 C1
V37
20
RD/LG
8 C101
V37
20
PK/LG
41 C2
SPEED CONTROL SWITCH SIGNAL
VEHICLE SPEED CONTROL SERVO
(8W-33-3)
SPEED CONTROL VACUUM SOLENOID CONTROL
SPEED CONTROL VENT SOLENOID CONTROL
1
2
V36
20
TN/RD
56 C2
SPEED CONTROL VACUUM SOLENOID CONTROL
V35
20
LG/RD
80 C2
SPEED CONTROL VENT SOLENOID CONTROL
BRAKE LAMP SWITCH
(8W-33-3)
SPEED CONTROL POWER SUPPLY
BRAKE SWITCH SENSE
3
1
V32
20
YL/RD
8 C113
V32
20
YL/RD
5 C1
SPEED CONTROL POWER SUPPLY
MTX
EATX
K29
20
WT/PK
8 C100
K29
20
WT/PK
K29
20
WT/PK
62 C2
BRAKE SWITCH SENSE
1
BRAKE SWITCH SENSE
BRAKE TRANSMISSION SHIFT INTERLOCK SOLENOID
(8W-31-8)
POWERTRAIN CONTROL MODULE (SBEC)

8W-31 TRANSMISSION CONTROL SYSTEM

Component	Page
Automatic Day/Night Mirror	8W-31-3, 11
Autostick Switch	8W-31-2, 9
Body Control Module	8W-31-7, 15
Brake Lamp Switch	8W-31-8
Brake Transmission Shift Interlock Solenoid	8W-31-8
Compass/Mini-Trip Computer	8W-31-8
Controller Antilock Brake	8W-31-10
Data Link Connector	8W-31-7, 15
Fuse 4	8W-31-3, 8, 11
Fuse 9	8W-31-2, 9
Fuse 11	8W-31-2, 9
G103	8W-31-4
G108	8W-31-2, 9
G301	8W-31-2, 9
Heated Seat Switch	8W-31-2, 9
Ignition Switch	8W-31-10
Input Speed Sensor	8W-31-4, 12
Junction Block	8W-31-2, 3, 8, 9, 11
Left Back-Up Lamp	8W-31-3, 11
Output Speed Sensor	8W-31-4, 12
Power Distribution Center	8W-31-2, 5, 6, 9, 13, 14
Powertrain Control Module	8W-31-2, 3, 4, 5, 6, 7, 8, 10, 11, 12, 15
Right Back-Up Lamp	8W-31-3, 11
Starter Motor Relay	8W-31-10
Throttle Position Sensor	8W-31-4, 12
Transmission Control Module	8W-31-9, 10, 11, 12, 13, 14, 15
Transmission Control Relay	8W-31-2, 5, 6, 9, 13, 14
Transmission Range Sensor	8W-31-3, 4, 11, 12
Transmission Solenoid/Pressure Switch Assembly	8W-31-5, 6, 13, 14
Window Drop Relay Assembly	8W-31-8

2.0L/2.4L

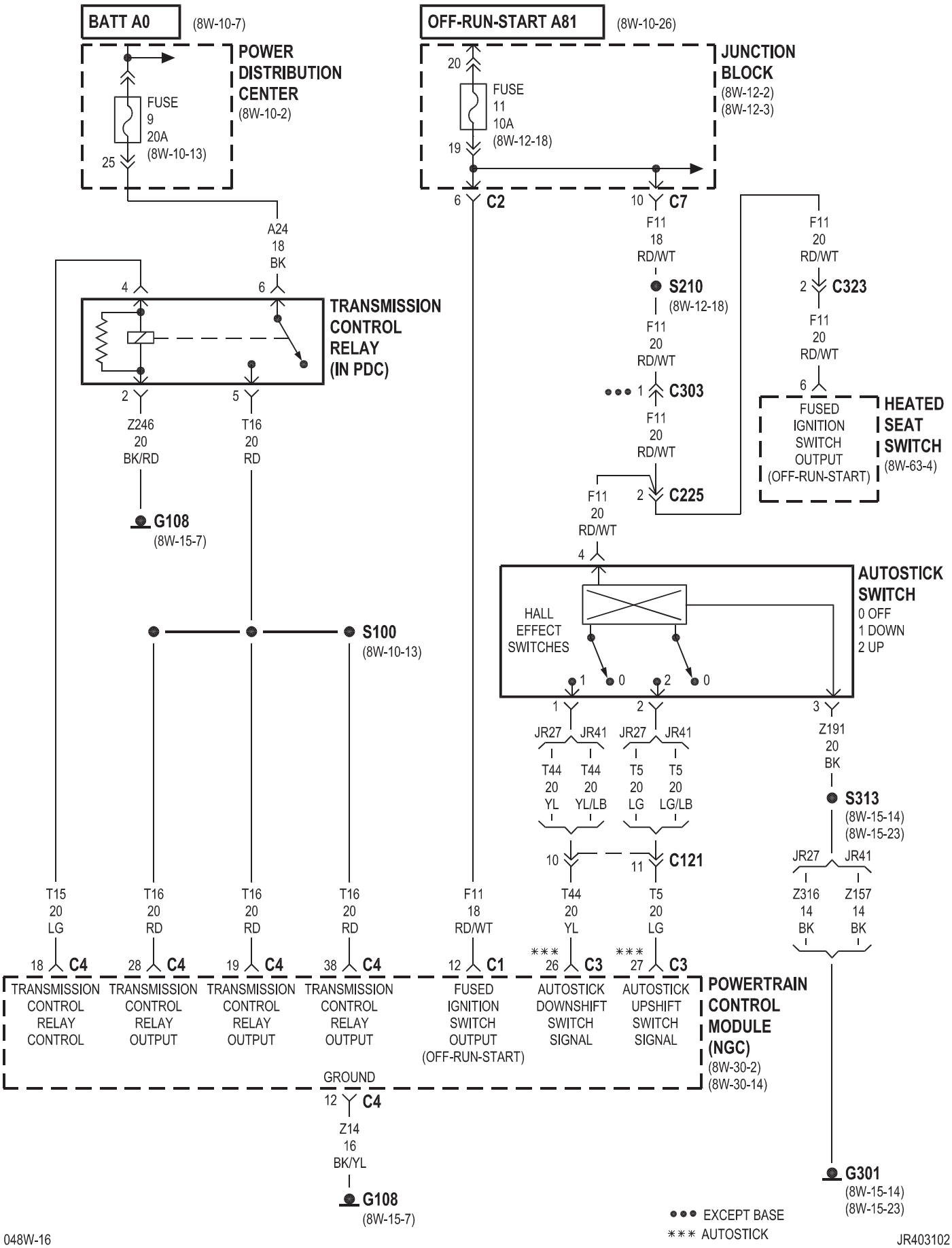
BATT A0
(8W-10-7)
POWER DISTRIBUTION CENTER
(8W-10-2)
FUSE 9 20A
(8W-10-13)
25
A24 18 BK
OFF-RUN-START A81
(8W-10-26)
JUNCTION BLOCK
(8W-12-2)
(8W-12-3)
20
FUSE 11 10A
(8W-12-18)
19
6 C2
10 C7
F11 18 RD/WT
S210
(8W-12-18)
F11 20 RD/WT
1 C303
F11 20 RD/WT
2 C225
F11 20 RD/WT
2 C323
F11 20 RD/WT
6
FUSED IGNITION SWITCH OUTPUT (OFF-RUN-START)
HEATED SEAT SWITCH
(8W-63-4)
TRANSMISSION CONTROL RELAY (IN PDC)
4
6
2
5
Z246 20 BK/RD
T16 20 RD
G108
(8W-15-7)
S100
(8W-10-13)
F11 20 RD/WT
4
AUTOSTICK SWITCH
0 OFF
1 DOWN
2 UP
HALL EFFECT SWITCHES
1
0
2
0
1
2
3
JR27
JR41
JR27
JR41
T44 20 YL
T44 20 YL/LB
T5 20 LG
T5 20 LG/LB
Z191 20 BK
S313
(8W-15-14)
(8W-15-23)
10
11
C121
JR27
JR41
Z316 14 BK
Z157 14 BK
T15 20 LG
T16 20 RD
T16 20 RD
T16 20 RD
F11 18 RD/WT
T44 20 YL
T5 20 LG
18 C4
28 C4
19 C4
38 C4
12 C1
26 C3
27 C3
TRANSMISSION CONTROL RELAY CONTROL
TRANSMISSION CONTROL RELAY OUTPUT
TRANSMISSION CONTROL RELAY OUTPUT
TRANSMISSION CONTROL RELAY OUTPUT
FUSED IGNITION SWITCH OUTPUT (OFF-RUN-START)
AUTOSTICK DOWNSHIFT SWITCH SIGNAL
AUTOSTICK UPSHIFT SWITCH SIGNAL
POWERTRAIN CONTROL MODULE (NGC)
(8W-30-2)
(8W-30-14)
GROUND
12 C4
Z14 16 BK/YL
G108
(8W-15-7)
G301
(8W-15-14)
(8W-15-23)
EXCEPT BASE
AUTOSTICK

2.0L/2.4L

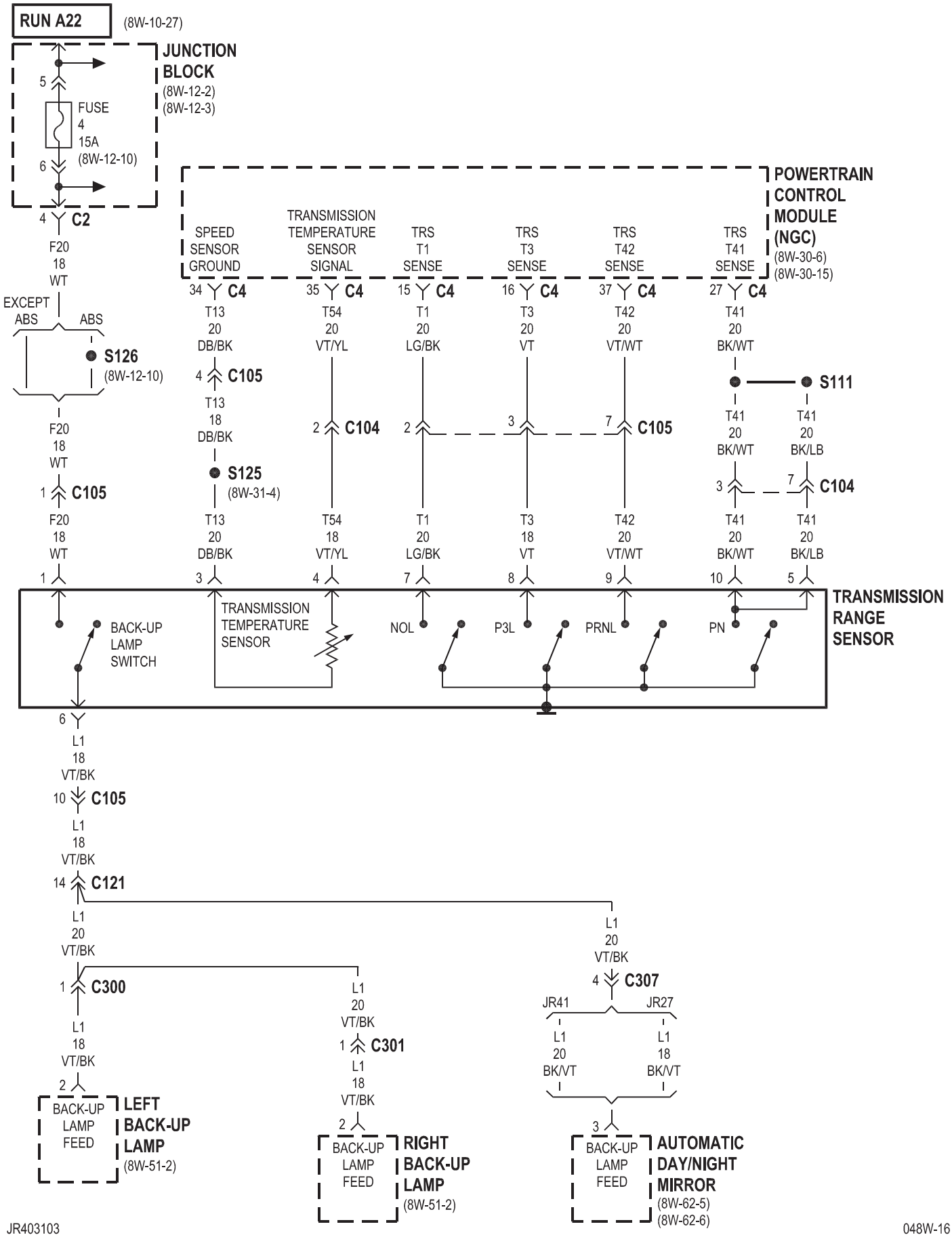
RUN A22
(8W-10-27)
JUNCTION BLOCK
(8W-12-2)
(8W-12-3)
5
FUSE
4
15A
(8W-12-10)
6
4 C2
F20
18
WT
EXCEPT ABS
ABS
S126
(8W-12-10)
F20
18
WT
1 C105
F20
18
WT
POWERTRAIN CONTROL MODULE (NGC)
(8W-30-6)
(8W-30-15)
SPEED SENSOR GROUND
TRANSMISSION TEMPERATURE SENSOR SIGNAL
TRS T1 SENSE
TRS T3 SENSE
TRS T42 SENSE
TRS T41 SENSE
34 C4
T13
20
DB/BK
35 C4
T54
20
VT/YL
15 C4
T1
20
LG/BK
16 C4
T3
20
VT
37 C4
T42
20
VT/WT
27 C4
T41
20
BK/WT
4 C105
T13
18
DB/BK
S125
(8W-31-4)
2 C104
2
3
7 C105
S111
T41
20
BK/WT
T41
20
BK/LB
3
7 C104
T13
20
DB/BK
T54
18
VT/YL
T1
20
LG/BK
T3
18
VT
T42
20
VT/WT
T41
20
BK/WT
T41
20
BK/LB
1
3
4
7
8
9
10
5
TRANSMISSION RANGE SENSOR
BACK-UP LAMP SWITCH
TRANSMISSION TEMPERATURE SENSOR
NOL
P3L
PRNL
PN
6
L1
18
VT/BK
10 C105
L1
18
VT/BK
14 C121
L1
20
VT/BK
1 C300
L1
18
VT/BK
2
BACK-UP LAMP FEED
LEFT BACK-UP LAMP
(8W-51-2)
L1
20
VT/BK
1 C301
L1
18
VT/BK
2
BACK-UP LAMP FEED
RIGHT BACK-UP LAMP
(8W-51-2)
L1
20
VT/BK
4 C307
JR41
JR27
L1
20
BK/VT
L1
18
BK/VT
3
BACK-UP LAMP FEED
AUTOMATIC DAY/NIGHT MIRROR
(8W-62-5)
(8W-62-6)

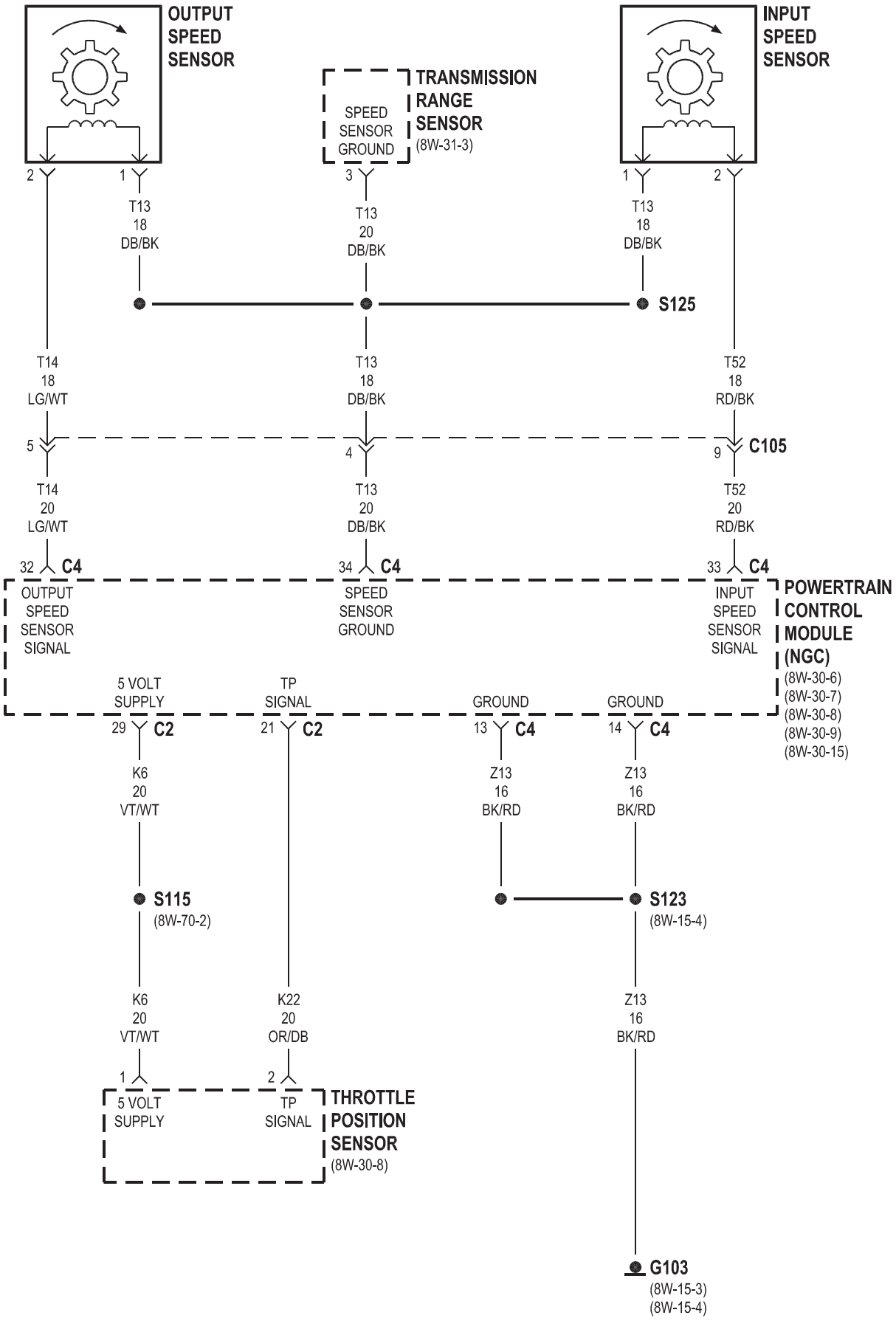
OUTPUT SPEED SENSOR
INPUT SPEED SENSOR
TRANSMISSION RANGE SENSOR
(8W-31-3)
SPEED SENSOR GROUND
2
1
3
1
2
T13 18 DB/BK
T13 20 DB/BK
T13 18 DB/BK
S125
T14 18 LG/WT
T13 18 DB/BK
T52 18 RD/BK
5
4
9
C105
T14 20 LG/WT
T13 20 DB/BK
T52 20 RD/BK
32 C4
34 C4
33 C4
OUTPUT SPEED SENSOR SIGNAL
SPEED SENSOR GROUND
INPUT SPEED SENSOR SIGNAL
POWERTRAIN CONTROL MODULE (NGC)
(8W-30-6)
(8W-30-7)
(8W-30-8)
(8W-30-9)
(8W-30-15)
5 VOLT SUPPLY
TP SIGNAL
GROUND
GROUND
29 C2
21 C2
13 C4
14 C4
K6 20 VT/WT
Z13 16 BK/RD
Z13 16 BK/RD
S115
(8W-70-2)
S123
(8W-15-4)
K6 20 VT/WT
K22 20 OR/DB
Z13 16 BK/RD
1
2
5 VOLT SUPPLY
TP SIGNAL
THROTTLE POSITION SENSOR
(8W-30-8)
G103
(8W-15-3)
(8W-15-4)

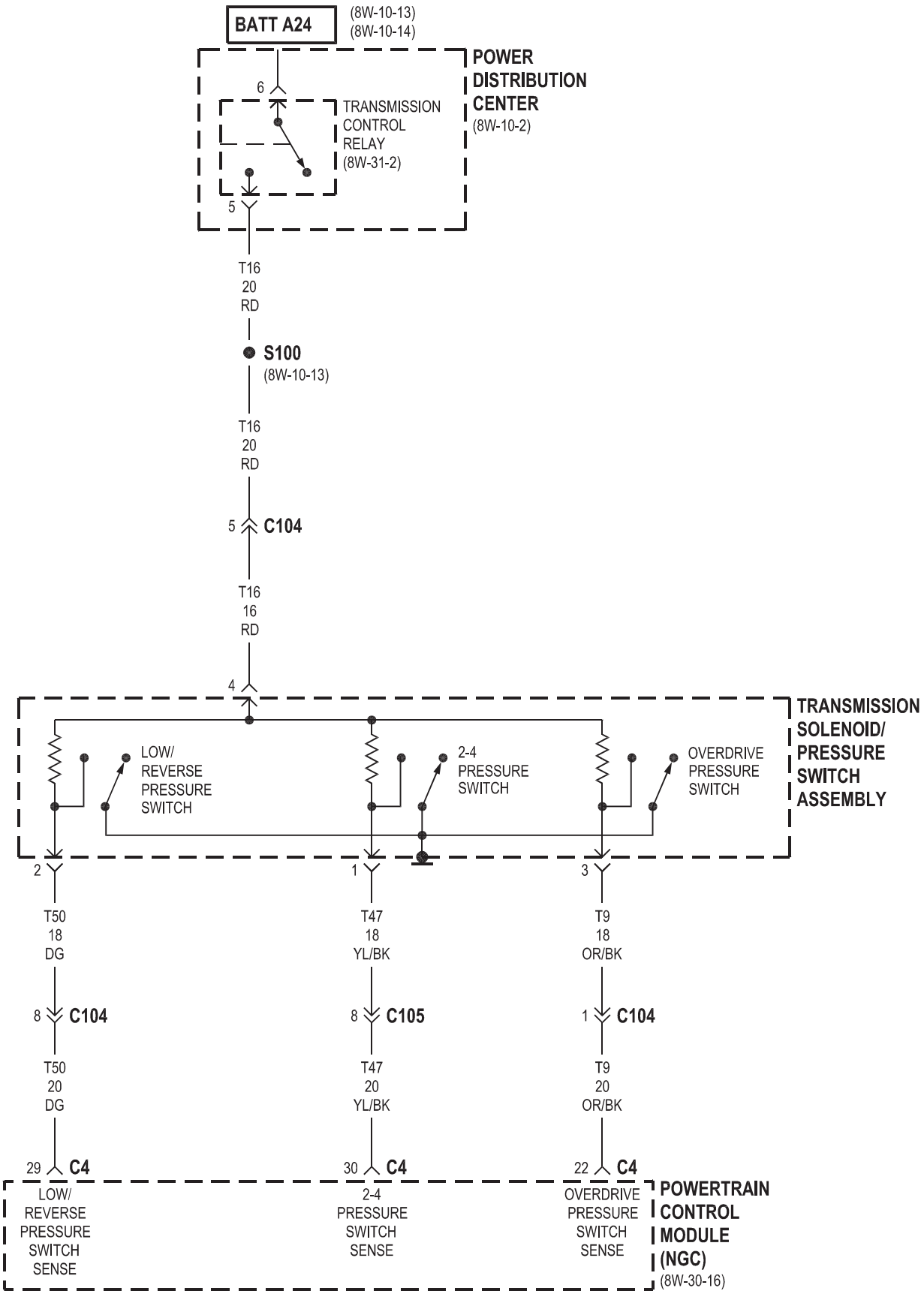
BATT A24
(8W-10-13)
(8W-10-14)
POWER DISTRIBUTION CENTER
(8W-10-2)
6
TRANSMISSION CONTROL RELAY
(8W-31-2)
5
T16
20
RD
S100
(8W-10-13)
T16
20
RD
5
C104
T16
16
RD
4
TRANSMISSION SOLENOID/ PRESSURE SWITCH ASSEMBLY
LOW/ REVERSE PRESSURE SWITCH
2-4 PRESSURE SWITCH
OVERDRIVE PRESSURE SWITCH
2
1
3
T50
18
DG
T47
18
YL/BK
T9
18
OR/BK
8
C104
8
C105
1
C104
T50
20
DG
T47
20
YL/BK
T9
20
OR/BK
29
C4
30
C4
22
C4
LOW/ REVERSE PRESSURE SWITCH SENSE
2-4 PRESSURE SWITCH SENSE
OVERDRIVE PRESSURE SWITCH SENSE
POWERTRAIN CONTROL MODULE (NGC)
(8W-30-16)

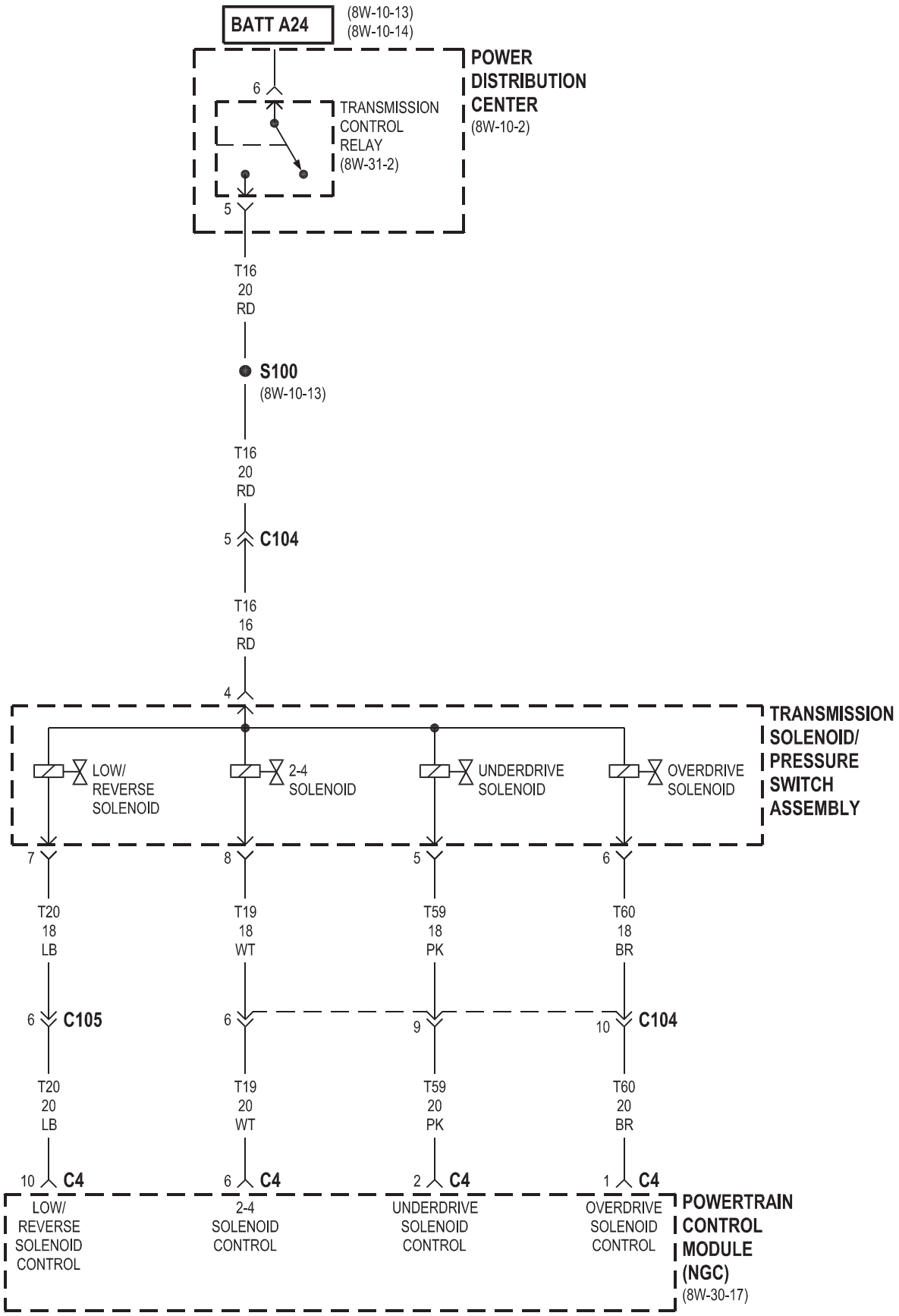
BATT A24
(8W-10-13)
(8W-10-14)
POWER DISTRIBUTION CENTER
(8W-10-2)
6
TRANSMISSION CONTROL RELAY
(8W-31-2)
5
T16
20
RD
S100
(8W-10-13)
T16
20
RD
5
C104
T16
16
RD
4
TRANSMISSION SOLENOID/ PRESSURE SWITCH ASSEMBLY
LOW/ REVERSE SOLENOID
2-4 SOLENOID
UNDERDRIVE SOLENOID
OVERDRIVE SOLENOID
7
8
5
6
T20
18
LB
T19
18
WT
T59
18
PK
T60
18
BR
6
C105
6
9
10
C104
T20
20
LB
T19
20
WT
T59
20
PK
T60
20
BR
10
C4
6
C4
2
C4
1
C4
LOW/ REVERSE SOLENOID CONTROL
2-4 SOLENOID CONTROL
UNDERDRIVE SOLENOID CONTROL
OVERDRIVE SOLENOID CONTROL
POWERTRAIN CONTROL MODULE (NGC)
(8W-30-17)

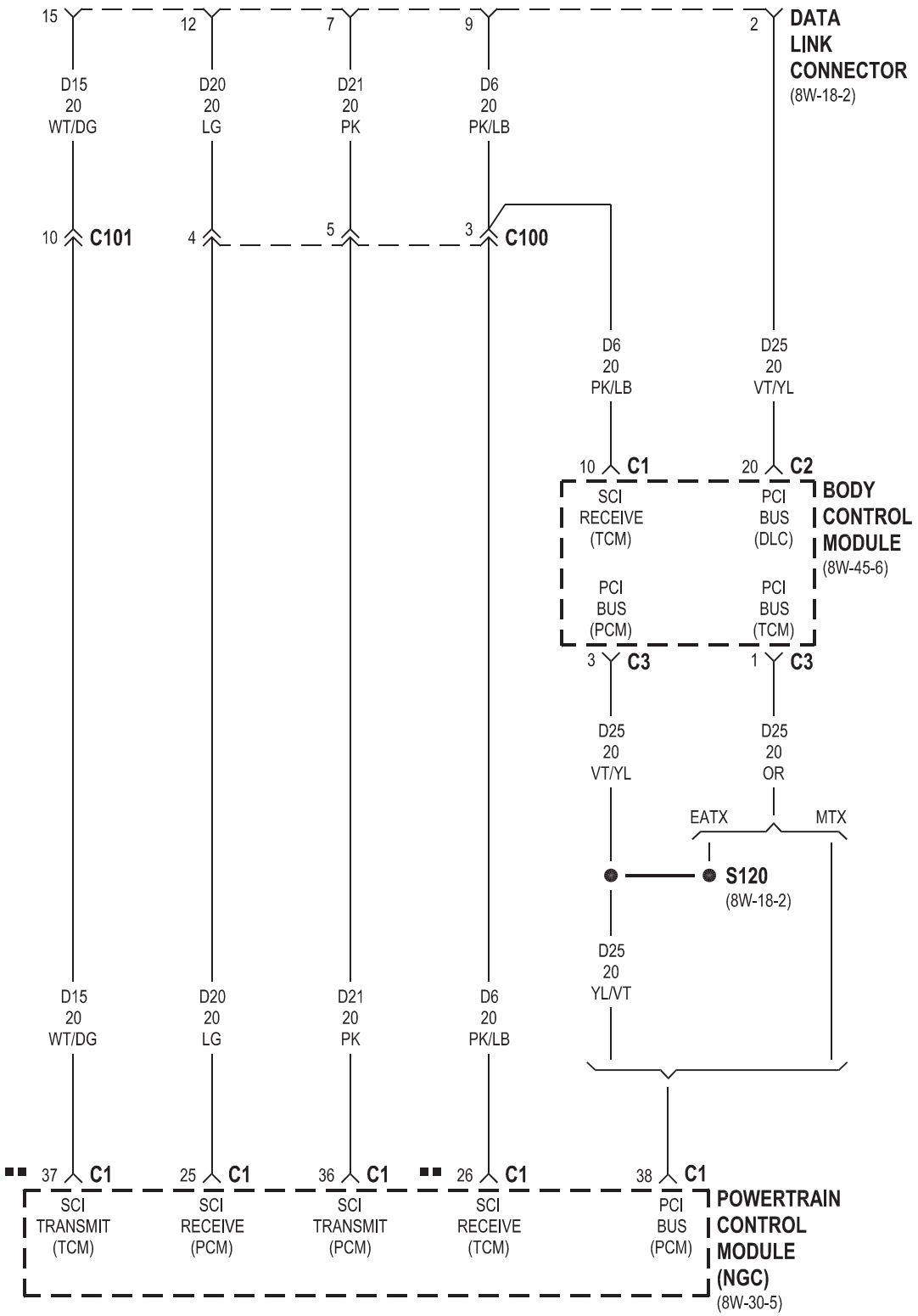
15
12
7
9
2
DATA LINK CONNECTOR
(8W-18-2)
D15 20 WT/DG
D20 20 LG
D21 20 PK
D6 20 PK/LB
10 C101
4
5
3 C100
D6 20 PK/LB
D25 20 VT/YL
10 C1
20 C2
SCI RECEIVE (TCM)
PCI BUS (DLC)
BODY CONTROL MODULE
(8W-45-6)
PCI BUS (PCM)
PCI BUS (TCM)
3 C3
1 C3
D25 20 VT/YL
D25 20 OR
EATX
MTX
S120
(8W-18-2)
D25 20 YL/VT
D15 20 WT/DG
D20 20 LG
D21 20 PK
D6 20 PK/LB
37 C1
25 C1
36 C1
26 C1
38 C1
SCI TRANSMIT (TCM)
SCI RECEIVE (PCM)
SCI TRANSMIT (PCM)
SCI RECEIVE (TCM)
PCI BUS (PCM)
POWERTRAIN CONTROL MODULE (NGC)
(8W-30-5)
EATX

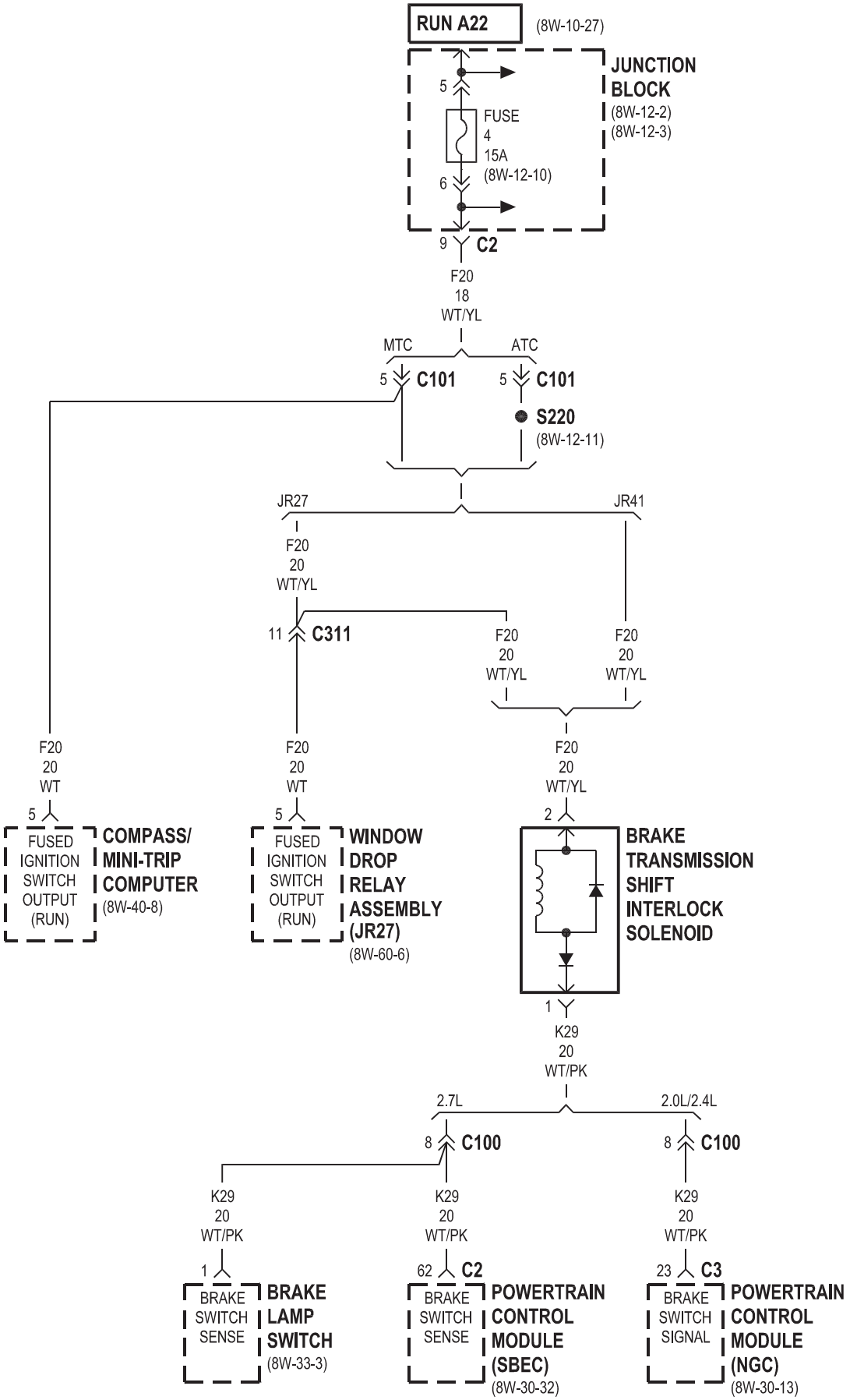
RUN A22
(8W-10-27)
JUNCTION BLOCK
(8W-12-2)
(8W-12-3)
5
FUSE 4 15A
(8W-12-10)
6
9
C2
F20 18 WT/YL
MTC
ATC
5
C101
5
C101
S220
(8W-12-11)
JR27
JR41
F20 20 WT/YL
11
C311
F20 20 WT/YL
F20 20 WT/YL
F20 20 WT
F20 20 WT
F20 20 WT/YL
5
FUSED IGNITION SWITCH OUTPUT (RUN)
COMPASS/ MINI-TRIP COMPUTER
(8W-40-8)
5
FUSED IGNITION SWITCH OUTPUT (RUN)
WINDOW DROP RELAY ASSEMBLY (JR27)
(8W-60-6)
2
BRAKE TRANSMISSION SHIFT INTERLOCK SOLENOID
1
K29 20 WT/PK
2.7L
2.0L/2.4L
8
C100
8
C100
K29 20 WT/PK
K29 20 WT/PK
K29 20 WT/PK
1
BRAKE SWITCH SENSE
BRAKE LAMP SWITCH
(8W-33-3)
62
C2
BRAKE SWITCH SENSE
POWERTRAIN CONTROL MODULE (SBEC)
(8W-30-32)
23
C3
BRAKE SWITCH SIGNAL
POWERTRAIN CONTROL MODULE (NGC)
(8W-30-13)

2.7L

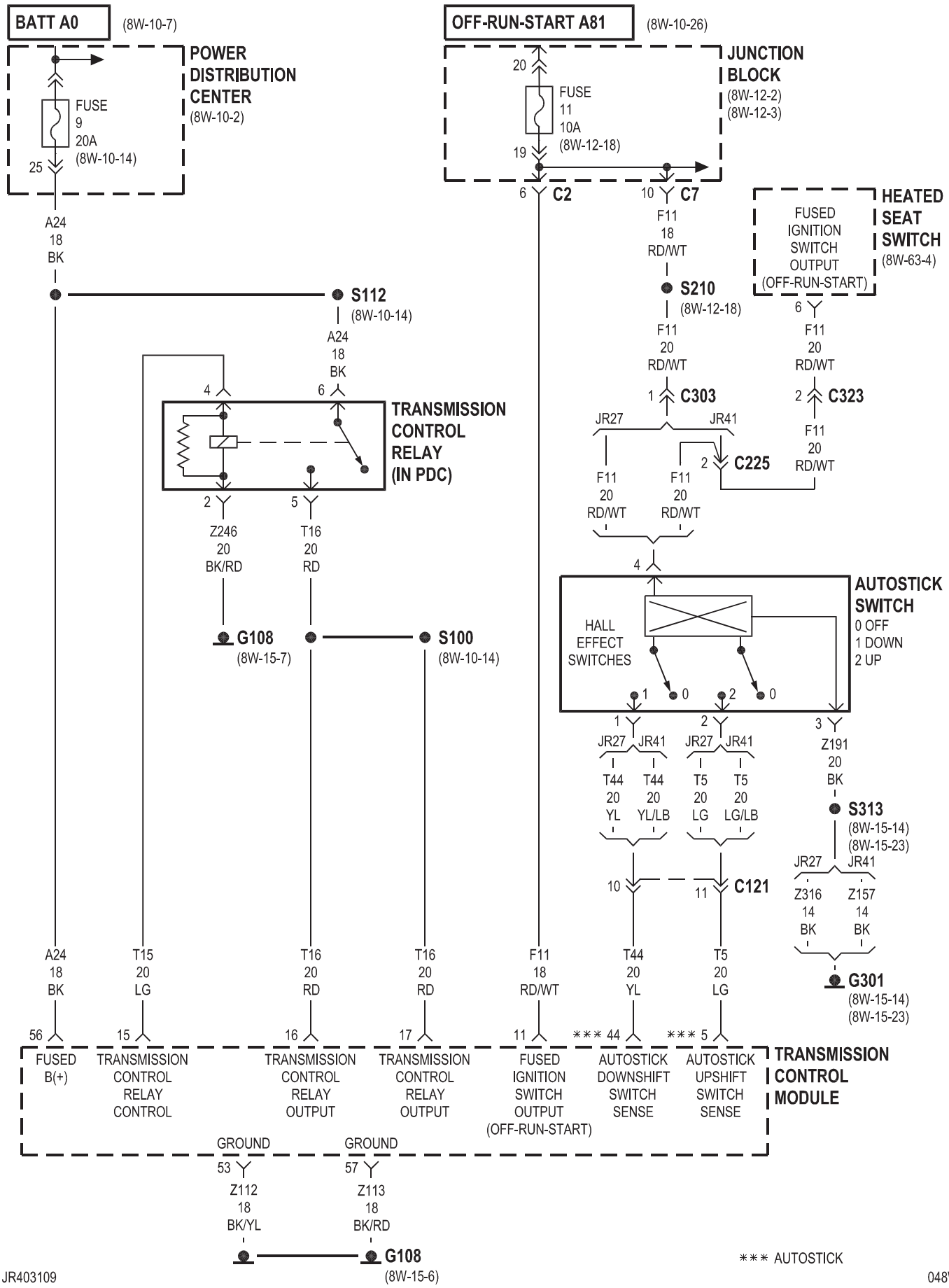
BATT A0
(8W-10-7)
POWER DISTRIBUTION CENTER
(8W-10-2)
FUSE 9 20A
(8W-10-14)
25
A24 18 BK
S112
(8W-10-14)
A24 18 BK
4
6
TRANSMISSION CONTROL RELAY (IN PDC)
2
5
Z246 20 BK/RD
T16 20 RD
G108
(8W-15-7)
S100
(8W-10-14)
OFF-RUN-START A81
(8W-10-26)
JUNCTION BLOCK
(8W-12-2)
(8W-12-3)
20
FUSE 11 10A
(8W-12-18)
19
6 C2
10 C7
F11 18 RD/WT
S210
(8W-12-18)
F11 20 RD/WT
1 C303
HEATED SEAT SWITCH
(8W-63-4)
FUSED IGNITION SWITCH OUTPUT (OFF-RUN-START)
6
F11 20 RD/WT
2 C323
F11 20 RD/WT
JR27
JR41
2 C225
F11 20 RD/WT
F11 20 RD/WT
4
AUTOSTICK SWITCH
0 OFF
1 DOWN
2 UP
HALL EFFECT SWITCHES
1
0
2
0
1
2
3
JR27 JR41
T44 20 YL
T44 20 YL/LB
JR27 JR41
T5 20 LG
T5 20 LG/LB
Z191 20 BK
S313
(8W-15-14)
(8W-15-23)
JR27 JR41
Z316 14 BK
Z157 14 BK
G301
(8W-15-14)
(8W-15-23)
10
11
C121
A24 18 BK
T15 20 LG
T16 20 RD
T16 20 RD
F11 18 RD/WT
T44 20 YL
T5 20 LG
56
15
16
17
11
*** 44
*** 5
FUSED B(+)
TRANSMISSION CONTROL RELAY CONTROL
TRANSMISSION CONTROL RELAY OUTPUT
TRANSMISSION CONTROL RELAY OUTPUT
FUSED IGNITION SWITCH OUTPUT (OFF-RUN-START)
AUTOSTICK DOWNSHIFT SWITCH SENSE
AUTOSTICK UPSHIFT SWITCH SENSE
TRANSMISSION CONTROL MODULE
GROUND
GROUND
53
57
Z112 18 BK/YL
Z113 18 BK/RD
G108
(8W-15-6)
*** AUTOSTICK

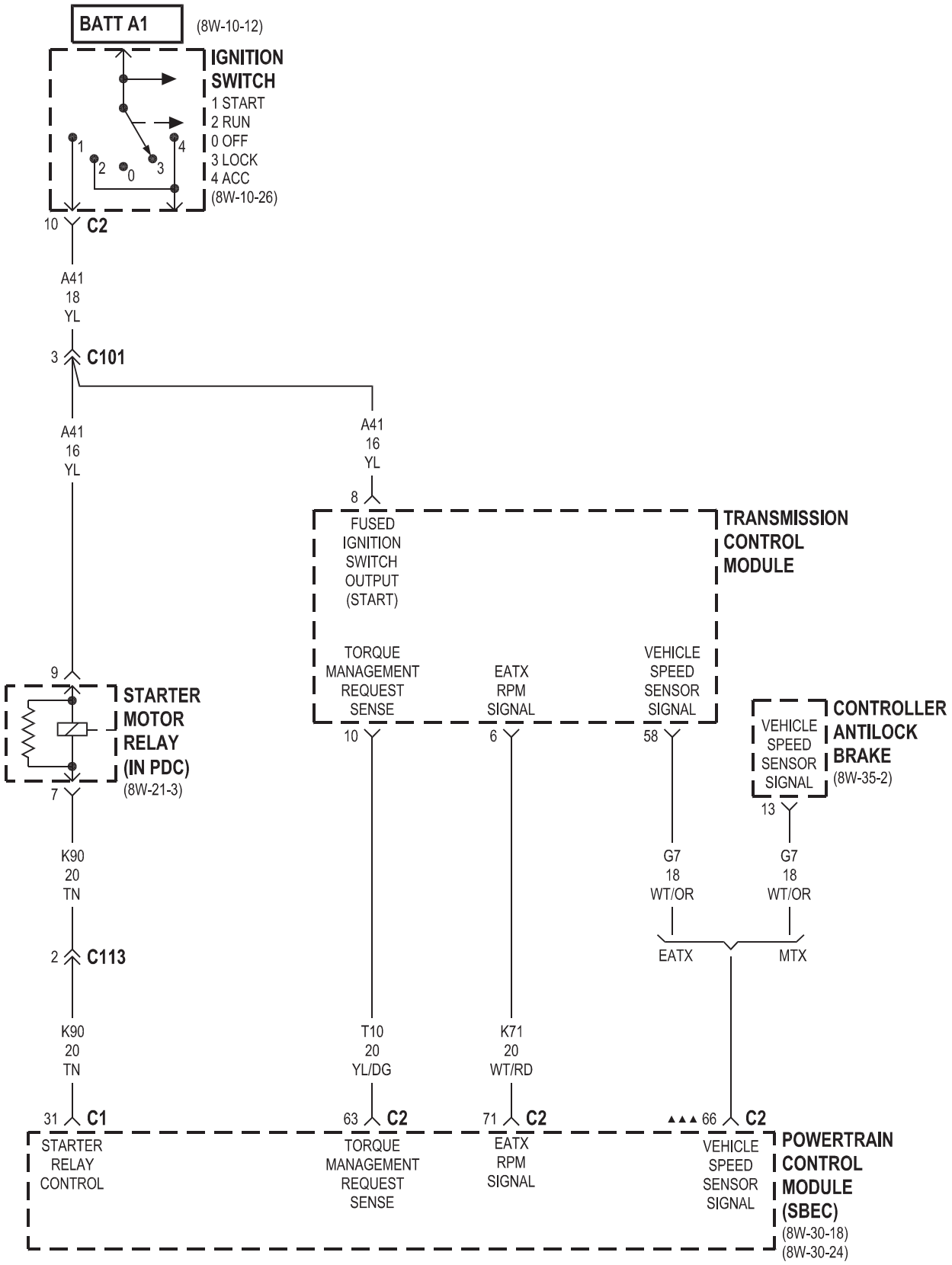

▲▲▲ ANTILOCK BRAKES

2.7L

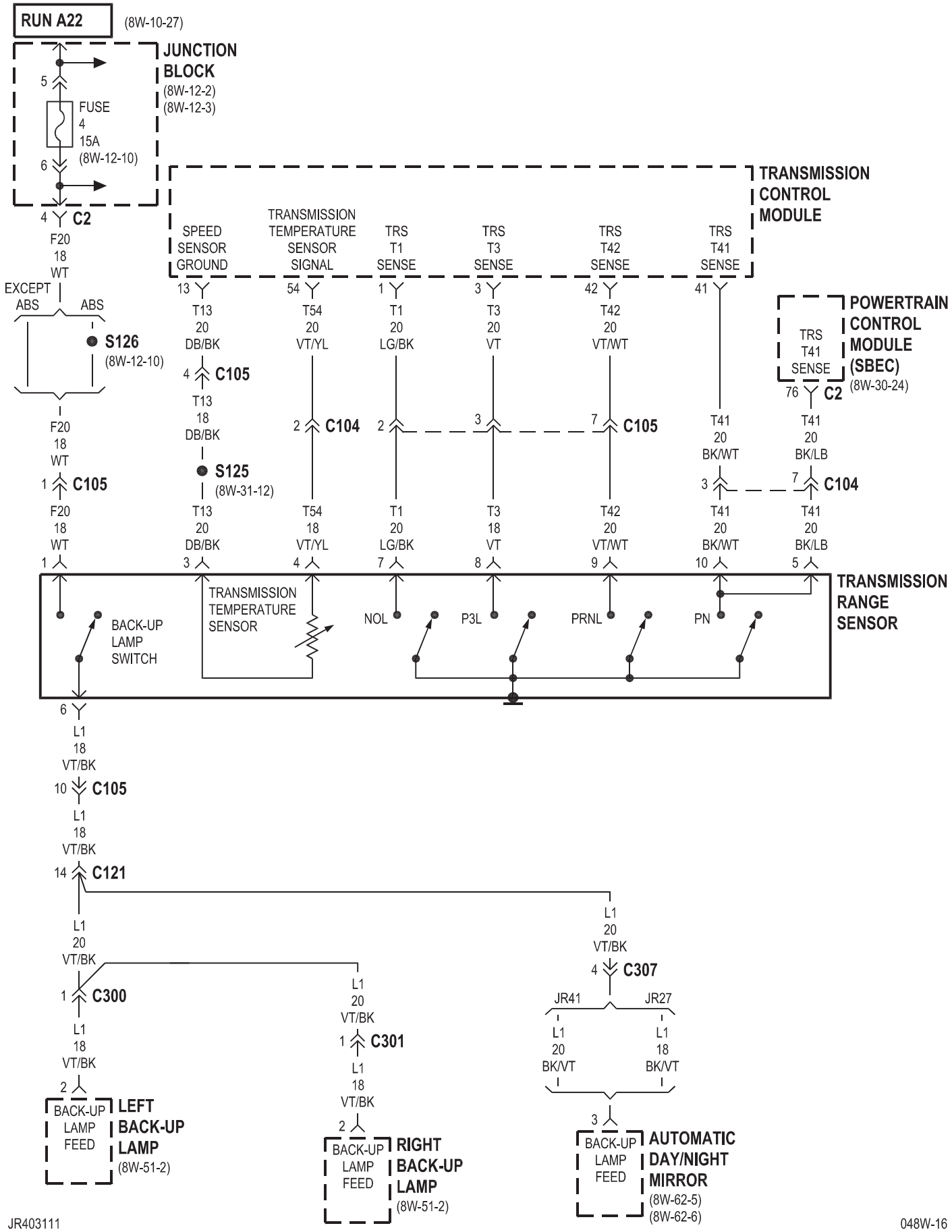
RUN A22
(8W-10-27)
JUNCTION BLOCK
(8W-12-2)
(8W-12-3)
5
FUSE
4
15A
(8W-12-10)
6
TRANSMISSION CONTROL MODULE
4 C2
F20
18
WT
EXCEPT ABS
ABS
S126
(8W-12-10)
F20
18
WT
1 C105
F20
18
WT
1
SPEED SENSOR GROUND
TRANSMISSION TEMPERATURE SENSOR SIGNAL
TRS T1 SENSE
TRS T3 SENSE
TRS T42 SENSE
TRS T41 SENSE
13
T13
20
DB/BK
4 C105
T13
18
DB/BK
S125
(8W-31-12)
T13
20
DB/BK
3
54
T54
20
VT/YL
2 C104
T54
18
VT/YL
4
1
T1
20
LG/BK
2
T1
20
LG/BK
7
3
T3
20
VT
3
T3
18
VT
8
42
T42
20
VT/WT
7 C105
T42
20
VT/WT
9
41
T41
20
BK/WT
3
T41
20
BK/WT
10
POWERTRAIN CONTROL MODULE (SBEC)
(8W-30-24)
TRS T41 SENSE
76 C2
T41
20
BK/LB
7 C104
T41
20
BK/LB
5
TRANSMISSION RANGE SENSOR
BACK-UP LAMP SWITCH
TRANSMISSION TEMPERATURE SENSOR
NOL
P3L
PRNL
PN
6
L1
18
VT/BK
10 C105
L1
18
VT/BK
14 C121
L1
20
VT/BK
1 C300
L1
18
VT/BK
2
BACK-UP LAMP FEED
LEFT BACK-UP LAMP
(8W-51-2)
L1
20
VT/BK
1 C301
L1
18
VT/BK
2
BACK-UP LAMP FEED
RIGHT BACK-UP LAMP
(8W-51-2)
L1
20
VT/BK
4 C307
JR41
JR27
L1
20
BK/VT
L1
18
BK/VT
3
BACK-UP LAMP FEED
AUTOMATIC DAY/NIGHT MIRROR
(8W-62-5)
(8W-62-6)

2.7L

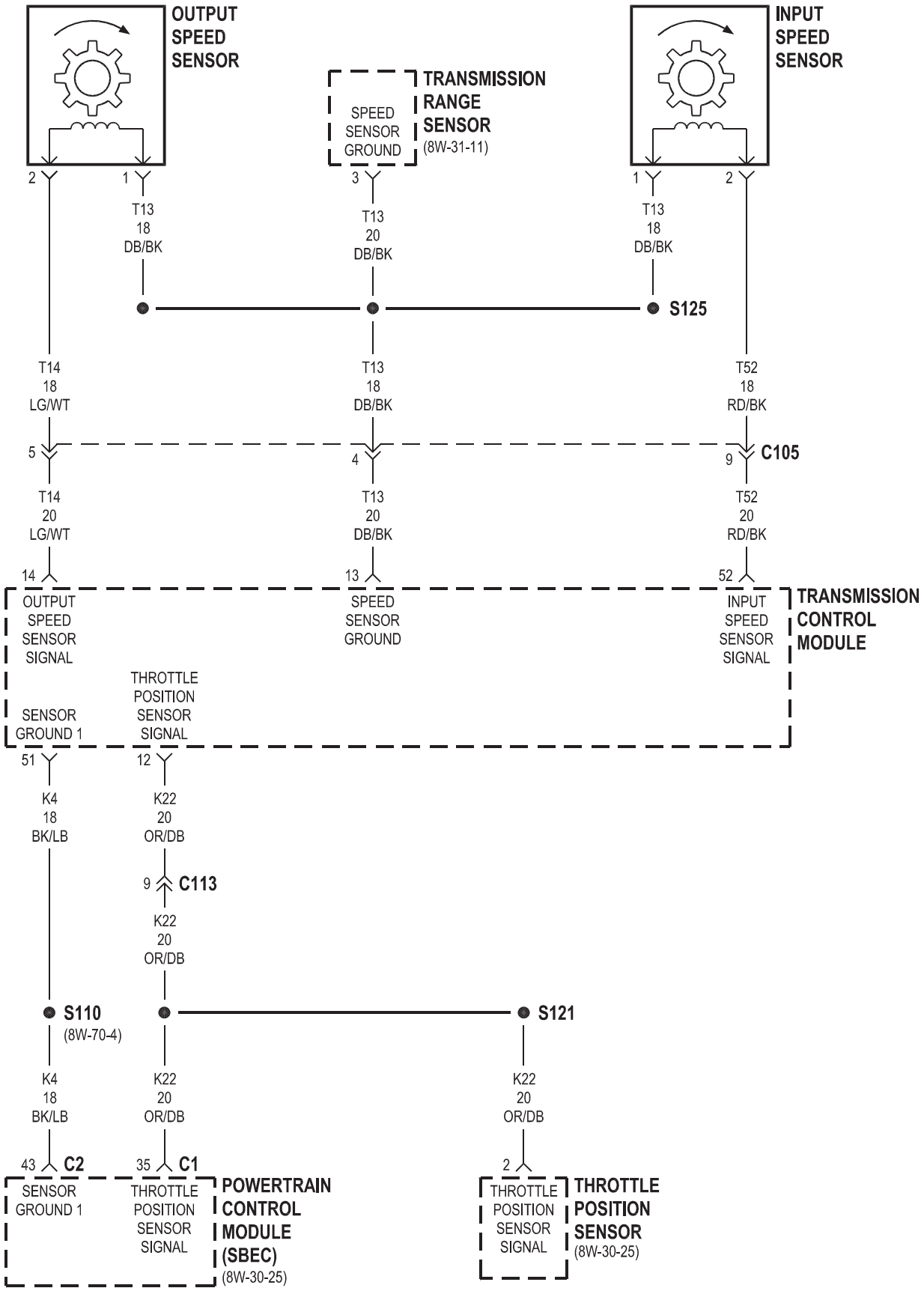
OUTPUT SPEED SENSOR
INPUT SPEED SENSOR
TRANSMISSION RANGE SENSOR
(8W-31-11)
SPEED SENSOR GROUND
2
1
3
1
2
T13 18 DB/BK
T13 20 DB/BK
T13 18 DB/BK
S125
T14 18 LG/WT
T13 18 DB/BK
T52 18 RD/BK
5
4
9
C105
T14 20 LG/WT
T13 20 DB/BK
T52 20 RD/BK
14
13
52
OUTPUT SPEED SENSOR SIGNAL
SPEED SENSOR GROUND
INPUT SPEED SENSOR SIGNAL
TRANSMISSION CONTROL MODULE
THROTTLE POSITION SENSOR SIGNAL
SENSOR GROUND 1
51
12
K4 18 BK/LB
K22 20 OR/DB
9
C113
K22 20 OR/DB
S110
(8W-70-4)
S121
K4 18 BK/LB
K22 20 OR/DB
K22 20 OR/DB
43
C2
35
C1
2
SENSOR GROUND 1
THROTTLE POSITION SENSOR SIGNAL
POWERTRAIN CONTROL MODULE (SBEC)
(8W-30-25)
THROTTLE POSITION SENSOR SIGNAL
THROTTLE POSITION SENSOR
(8W-30-25)

2.7L

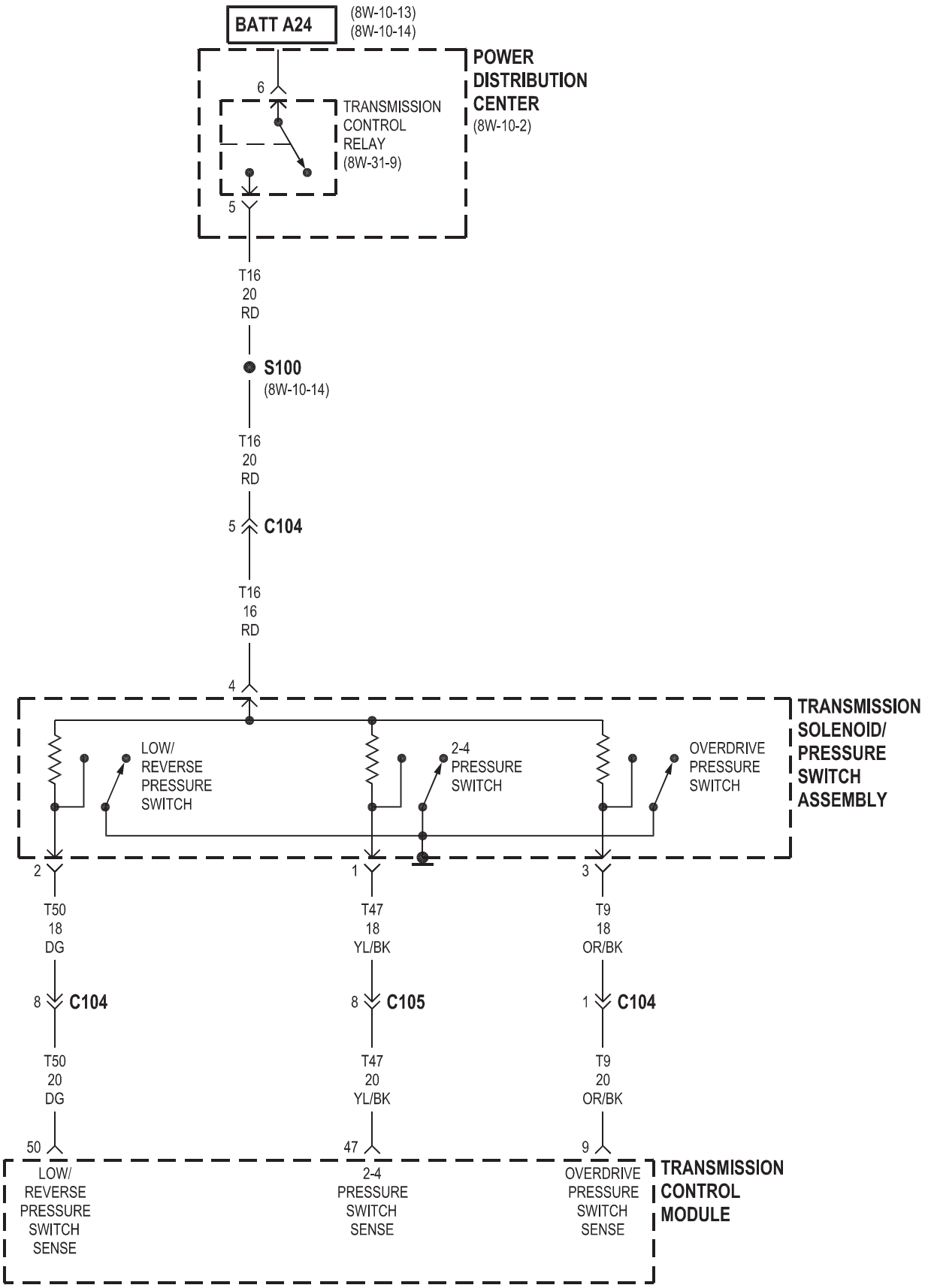
BATT A24
(8W-10-13)
(8W-10-14)
POWER DISTRIBUTION CENTER
(8W-10-2)
6
TRANSMISSION CONTROL RELAY
(8W-31-9)
5
T16
20
RD
S100
(8W-10-14)
T16
20
RD
5
C104
T16
16
RD
4
TRANSMISSION SOLENOID/ PRESSURE SWITCH ASSEMBLY
LOW/ REVERSE PRESSURE SWITCH
2-4 PRESSURE SWITCH
OVERDRIVE PRESSURE SWITCH
2
1
3
T50
18
DG
T47
18
YL/BK
T9
18
OR/BK
8
C104
8
C105
1
C104
T50
20
DG
T47
20
YL/BK
T9
20
OR/BK
50
47
9
LOW/ REVERSE PRESSURE SWITCH SENSE
2-4 PRESSURE SWITCH SENSE
OVERDRIVE PRESSURE SWITCH SENSE
TRANSMISSION CONTROL MODULE

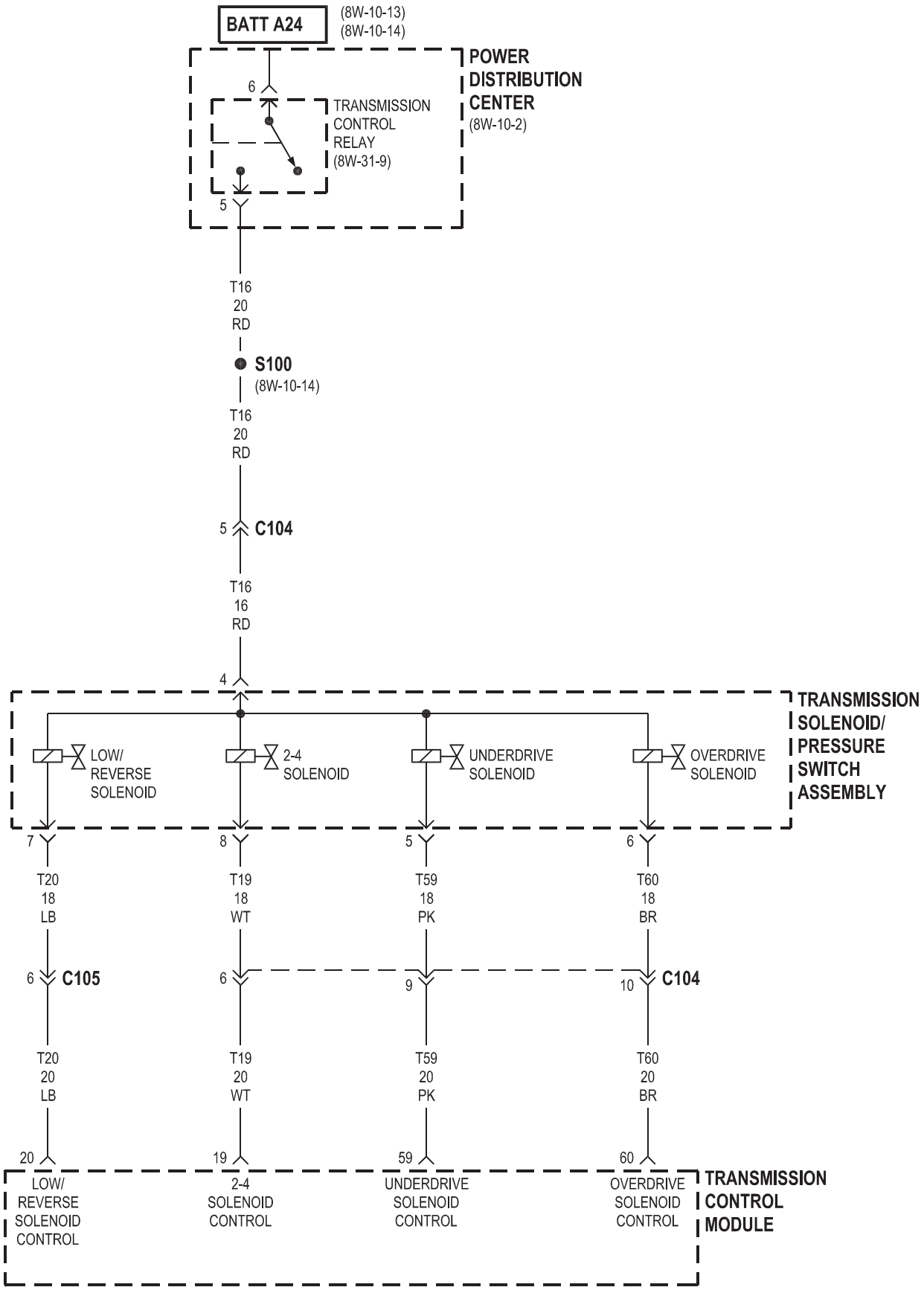
BATT A24
(8W-10-13)
(8W-10-14)
POWER DISTRIBUTION CENTER
(8W-10-2)
6
TRANSMISSION CONTROL RELAY
(8W-31-9)
5
T16
20
RD
S100
(8W-10-14)
T16
20
RD
5
C104
T16
16
RD
4
TRANSMISSION SOLENOID/ PRESSURE SWITCH ASSEMBLY
LOW/ REVERSE SOLENOID
2-4 SOLENOID
UNDERDRIVE SOLENOID
OVERDRIVE SOLENOID
7
8
5
6
T20
18
LB
T19
18
WT
T59
18
PK
T60
18
BR
6
C105
6
9
10
C104
T20
20
LB
T19
20
WT
T59
20
PK
T60
20
BR
20
19
59
60
LOW/ REVERSE SOLENOID CONTROL
2-4 SOLENOID CONTROL
UNDERDRIVE SOLENOID CONTROL
OVERDRIVE SOLENOID CONTROL
TRANSMISSION CONTROL MODULE

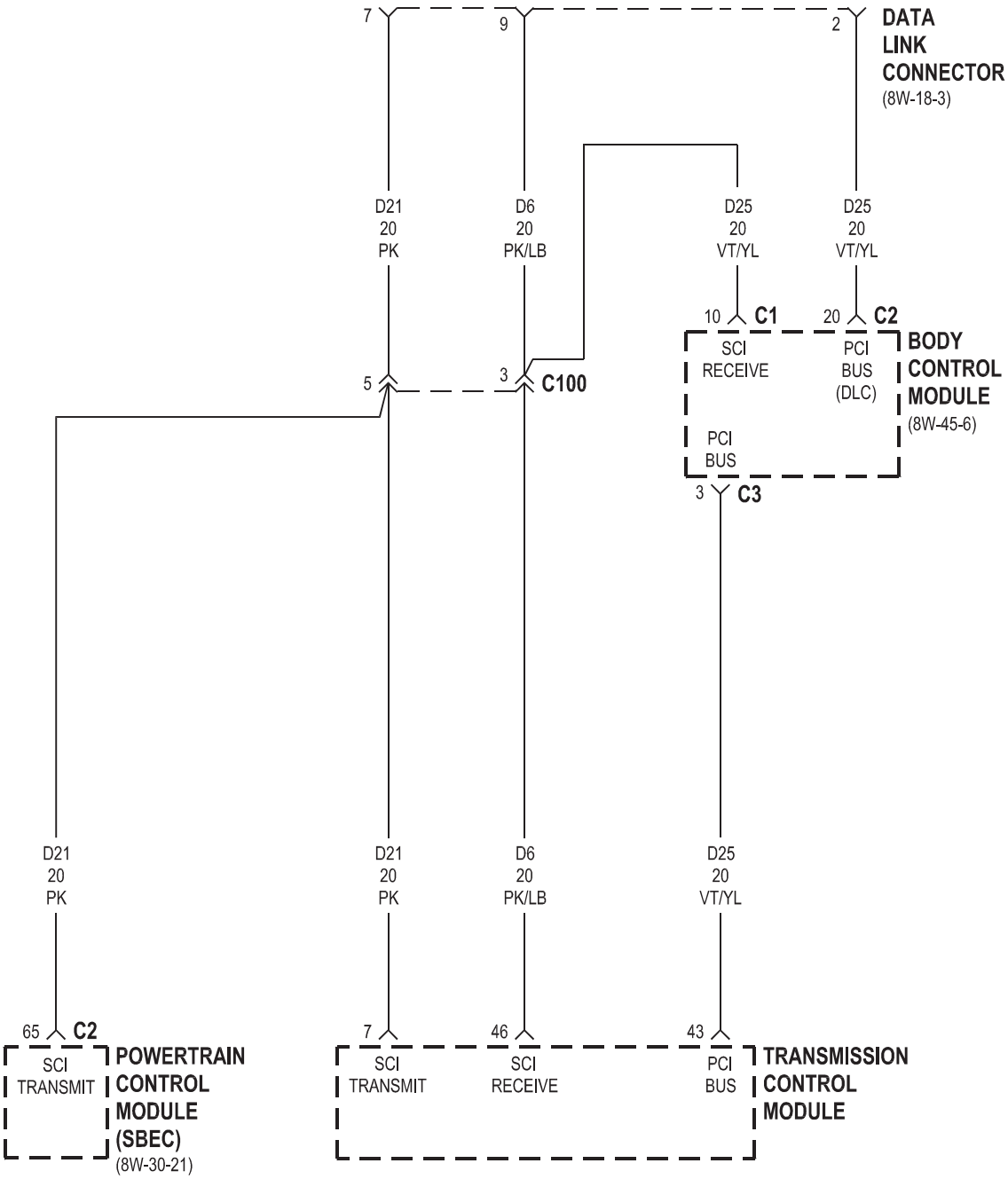
7
9
2
DATA LINK CONNECTOR
(8W-18-3)
D21
20
PK
D6
20
PK/LB
D25
20
VT/YL
D25
20
VT/YL
10
C1
20
C2
SCI
RECEIVE
PCI
BUS
(DLC)
BODY CONTROL MODULE
(8W-45-6)
5
3
C100
PCI
BUS
3
C3
D21
20
PK
D21
20
PK
D6
20
PK/LB
D25
20
VT/YL
65
C2
SCI
TRANSMIT
POWERTRAIN CONTROL MODULE (SBEC)
(8W-30-21)
7
46
43
SCI
TRANSMIT
SCI
RECEIVE
PCI
BUS
TRANSMISSION CONTROL MODULE

8W-33 VEHICLE SPEED CONTROL

Component	Page
Body Control Module	8W-33-2
Brake Lamp Switch	8W-33-3, 4
Brake Transmission Shift Interlock Solenoid	8W-33-3, 4
Clockspring	8W-33-5, 6
Compass/Mini-Trip Computer	8W-33-2
Controller Antilock Brake	8W-33-6
Fuse 7	8W-33-2
G103	8W-33-3, 4
G203	8W-33-5, 6
G204	8W-33-5, 6
Instrument Cluster	8W-33-2
Junction Block	8W-33-2, 3, 4
Left Speed Control Switch	8W-33-5, 6
Powertrain Control Module	8W-33-3, 4, 5, 6
Right Speed Control Switch	8W-33-5, 6
Transmission Control Module	8W-33-6
Vehicle Speed Control Servo	8W-33-3, 4

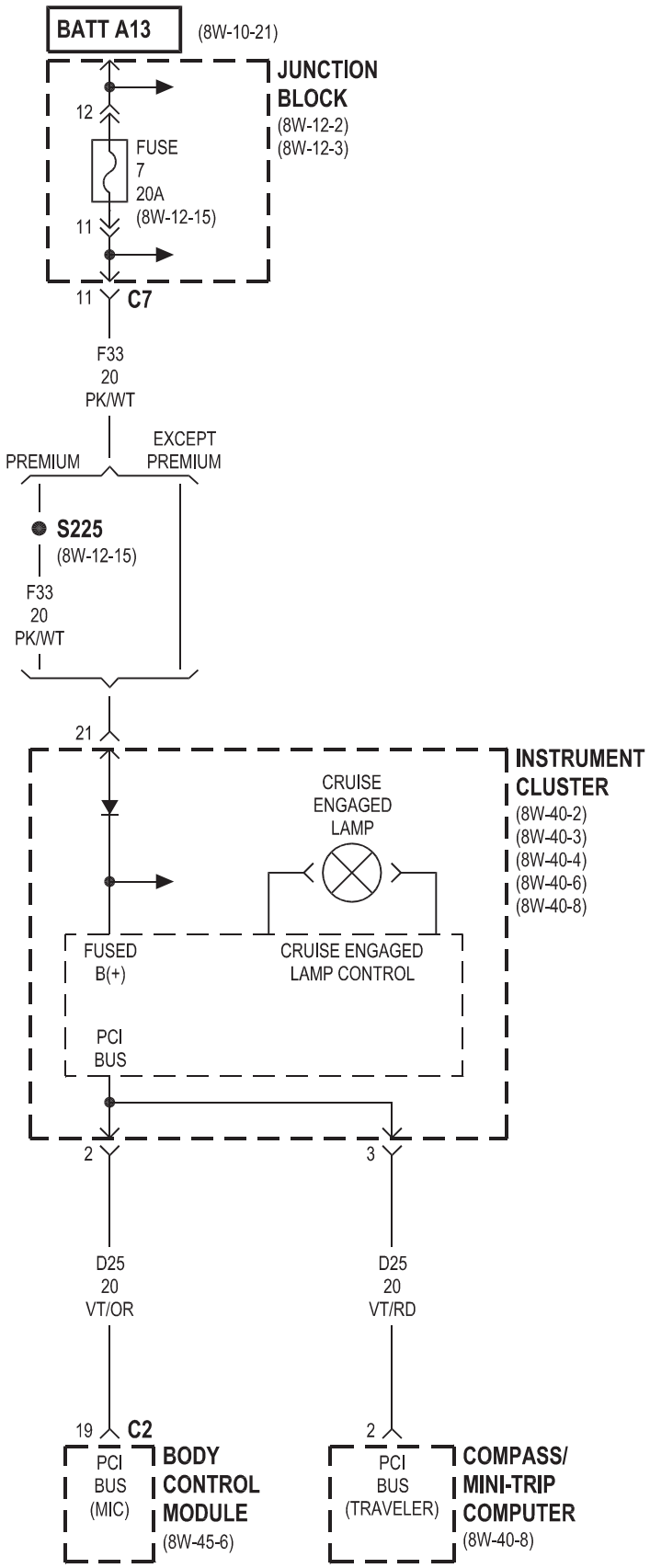
BATT A13
(8W-10-21)
JUNCTION BLOCK
(8W-12-2)
(8W-12-3)
12
FUSE 7 20A
(8W-12-15)
11
11
C7
F33 20 PK/WT
PREMIUM
EXCEPT PREMIUM
S225
(8W-12-15)
F33 20 PK/WT
21
INSTRUMENT CLUSTER
(8W-40-2)
(8W-40-3)
(8W-40-4)
(8W-40-6)
(8W-40-8)
CRUISE ENGAGED LAMP
FUSED B(+)
CRUISE ENGAGED LAMP CONTROL
PCI BUS
2
3
D25 20 VT/OR
D25 20 VT/RD
19
C2
PCI BUS (MIC)
BODY CONTROL MODULE
(8W-45-6)
2
PCI BUS (TRAVELER)
COMPASS/ MINI-TRIP COMPUTER
(8W-40-8)

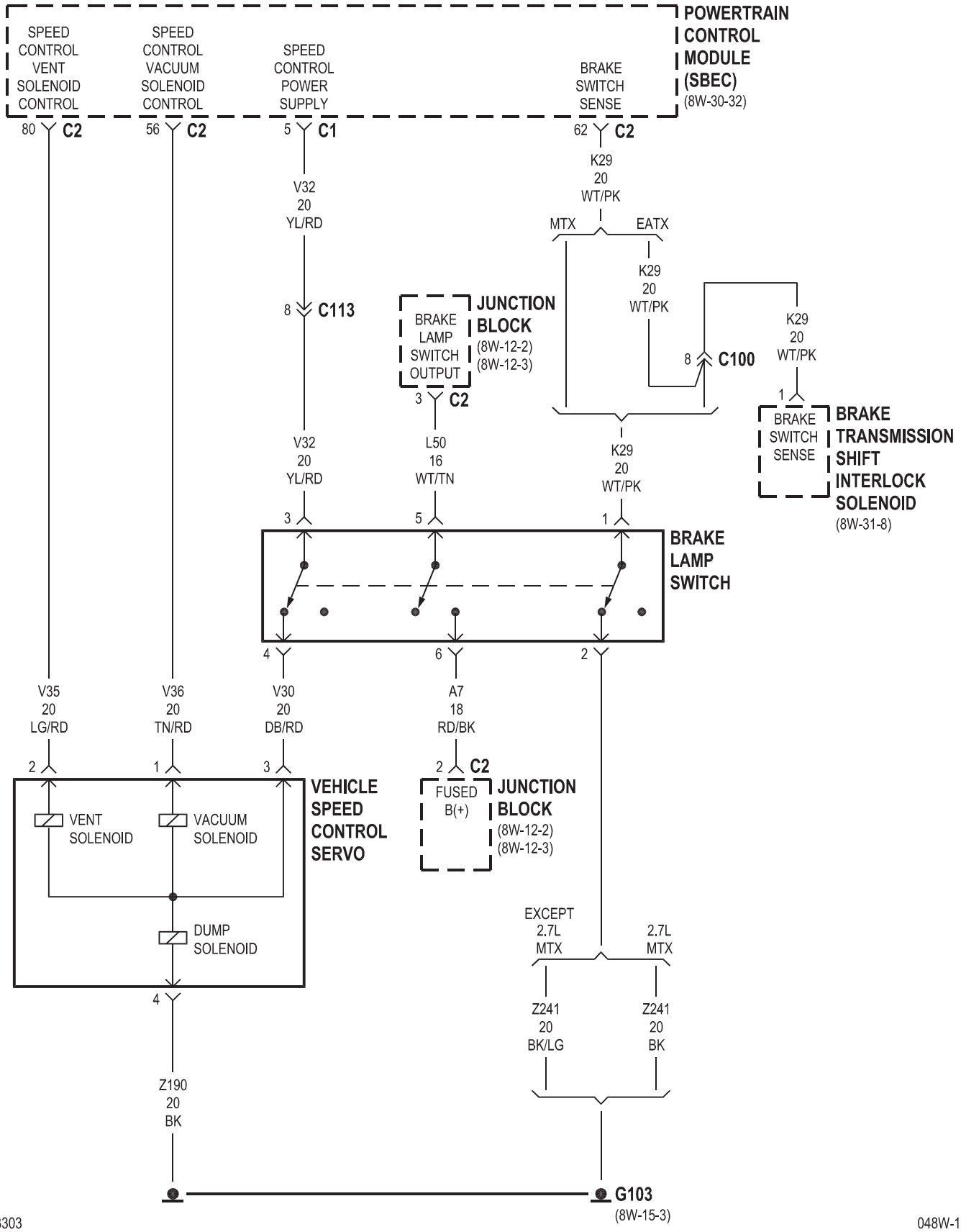
POWERTRAIN CONTROL MODULE (SBEC)
(8W-30-32)
SPEED CONTROL VENT SOLENOID CONTROL
SPEED CONTROL VACUUM SOLENOID CONTROL
SPEED CONTROL POWER SUPPLY
BRAKE SWITCH SENSE
80 C2
56 C2
5 C1
62 C2
K29 20 WT/PK
V32 20 YL/RD
MTX
EATX
K29 20 WT/PK
8 C113
BRAKE LAMP SWITCH OUTPUT
JUNCTION BLOCK
(8W-12-2)
(8W-12-3)
3 C2
8 C100
K29 20 WT/PK
1
BRAKE SWITCH SENSE
BRAKE TRANSMISSION SHIFT INTERLOCK SOLENOID
(8W-31-8)
V32 20 YL/RD
L50 16 WT/TN
K29 20 WT/PK
3
5
1
BRAKE LAMP SWITCH
4
6
2
V35 20 LG/RD
V36 20 TN/RD
V30 20 DB/RD
A7 18 RD/BK
2
1
3
2 C2
VEHICLE SPEED CONTROL SERVO
VENT SOLENOID
VACUUM SOLENOID
FUSED B(+)
JUNCTION BLOCK
(8W-12-2)
(8W-12-3)
DUMP SOLENOID
EXCEPT 2.7L MTX
2.7L MTX
4
Z241 20 BK/LG
Z241 20 BK
Z190 20 BK
G103
(8W-15-3)

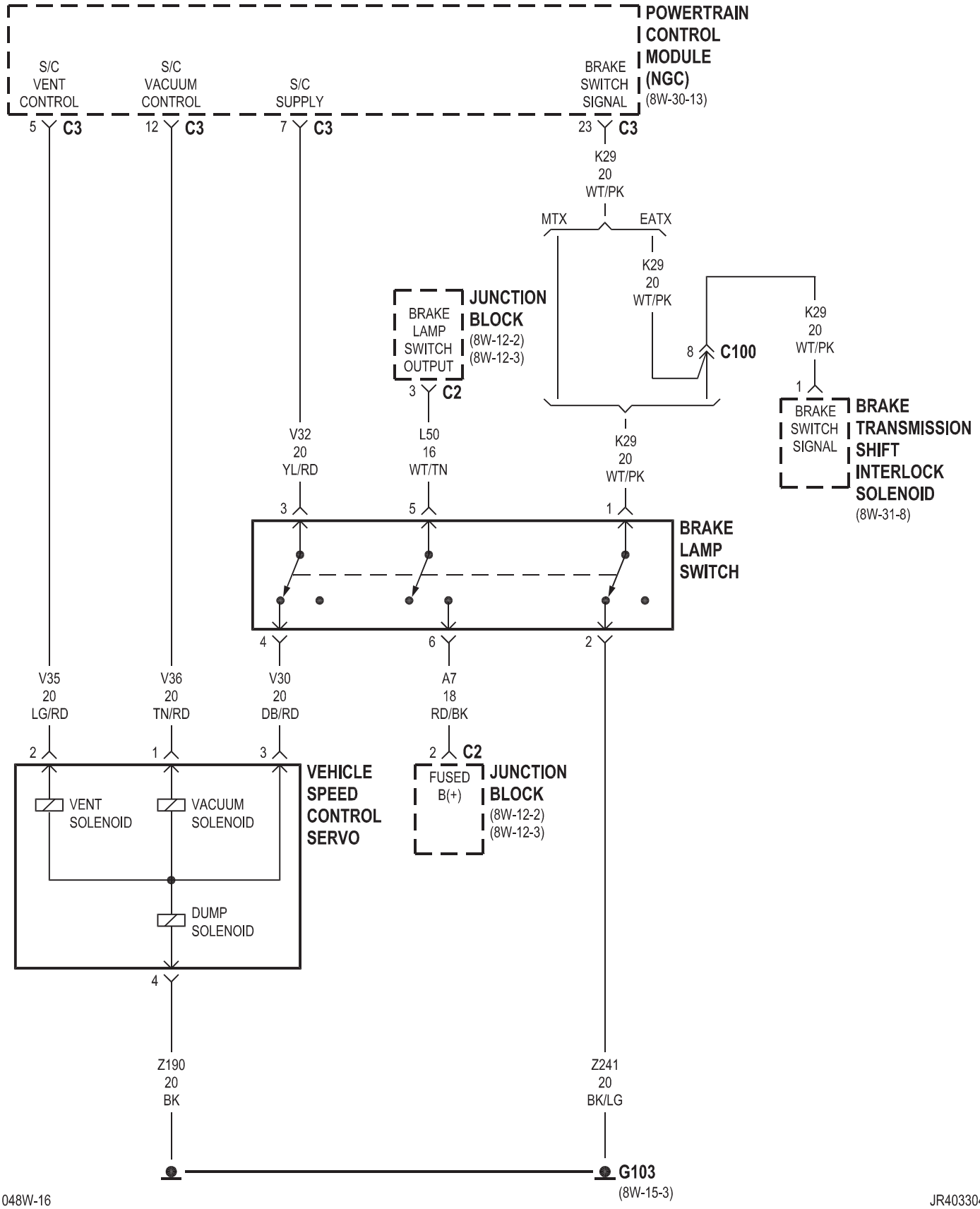
POWERTRAIN CONTROL MODULE (NGC)
(8W-30-13)
S/C VENT CONTROL
S/C VACUUM CONTROL
S/C SUPPLY
BRAKE SWITCH SIGNAL
5 C3
12 C3
7 C3
23 C3
K29 20 WT/PK
MTX
EATX
K29 20 WT/PK
K29 20 WT/PK
8 C100
1
BRAKE SWITCH SIGNAL
BRAKE TRANSMISSION SHIFT INTERLOCK SOLENOID
(8W-31-8)
BRAKE LAMP SWITCH OUTPUT
JUNCTION BLOCK
(8W-12-2)
(8W-12-3)
3 C2
V32 20 YL/RD
L50 16 WT/TN
K29 20 WT/PK
3
5
1
BRAKE LAMP SWITCH
4
6
2
V35 20 LG/RD
V36 20 TN/RD
V30 20 DB/RD
A7 18 RD/BK
2
1
3
2 C2
VEHICLE SPEED CONTROL SERVO
VENT SOLENOID
VACUUM SOLENOID
FUSED B(+)
JUNCTION BLOCK
(8W-12-2)
(8W-12-3)
DUMP SOLENOID
4
Z190 20 BK
Z241 20 BK/LG
G103
(8W-15-3)

2.0L/2.4L

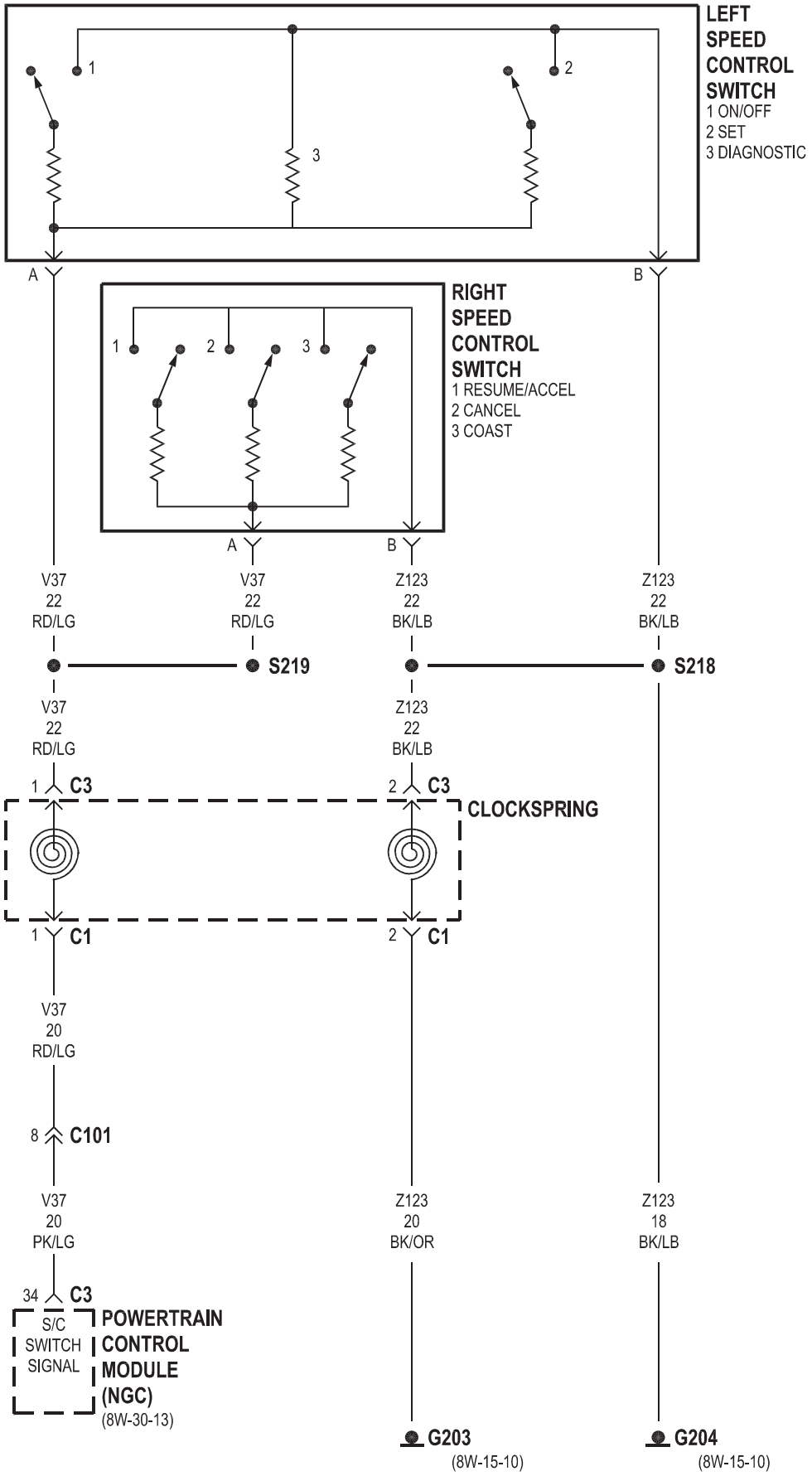
LEFT SPEED CONTROL SWITCH
1 ON/OFF
2 SET
3 DIAGNOSTIC
1
2
3
A
B
RIGHT SPEED CONTROL SWITCH
1 RESUME/ACCEL
2 CANCEL
3 COAST
1
2
3
A
B
V37 22 RD/LG
V37 22 RD/LG
Z123 22 BK/LB
Z123 22 BK/LB
S219
S218
V37 22 RD/LG
Z123 22 BK/LB
1 C3
2 C3
CLOCKSPRING
1 C1
2 C1
V37 20 RD/LG
8 C101
V37 20 PK/LG
Z123 20 BK/OR
Z123 18 BK/LB
34 C3
S/C SWITCH SIGNAL
POWERTRAIN CONTROL MODULE (NGC)
(8W-30-13)
G203
(8W-15-10)
G204
(8W-15-10)

2.7L

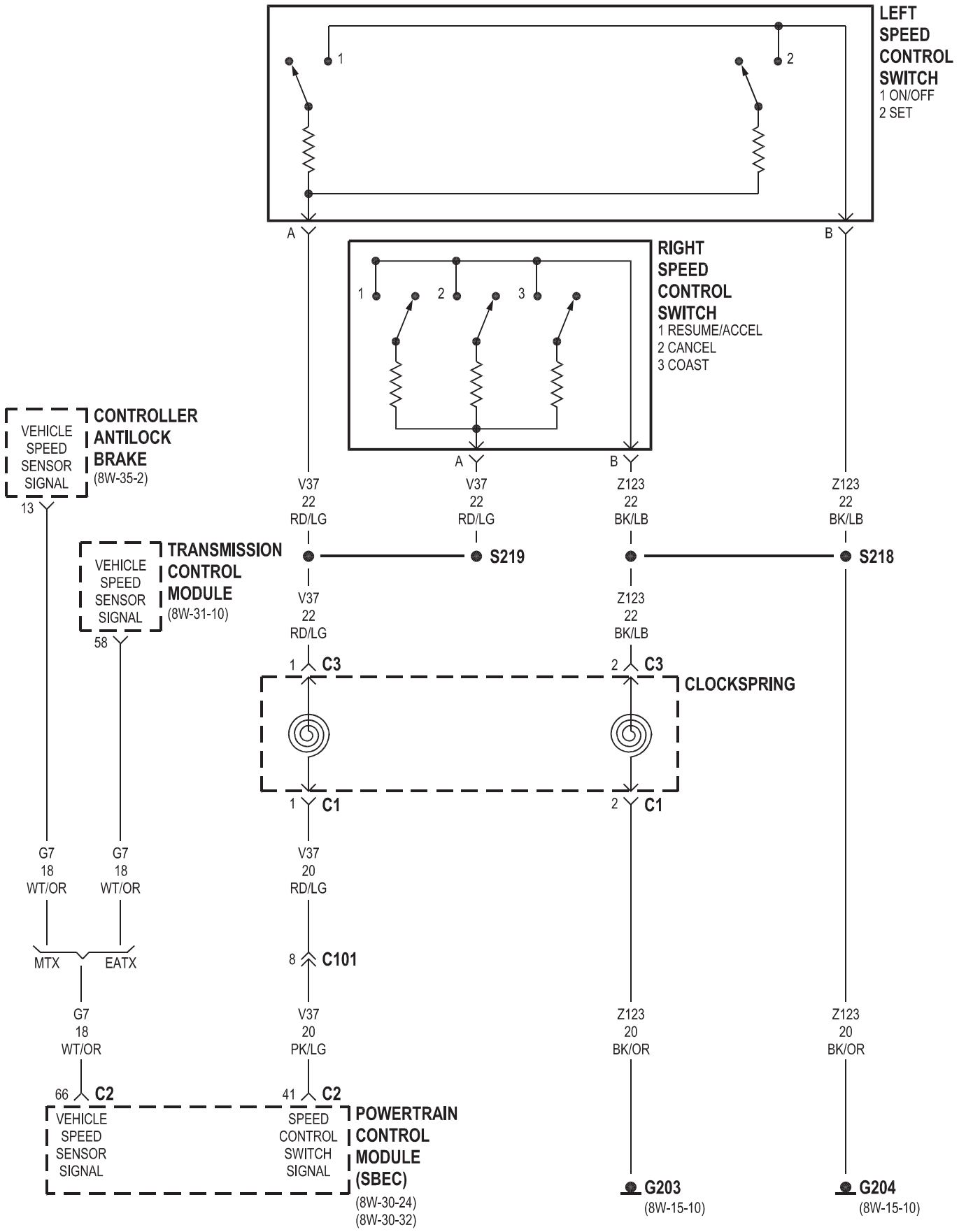
LEFT SPEED CONTROL SWITCH
1 ON/OFF
2 SET
RIGHT SPEED CONTROL SWITCH
1 RESUME/ACCEL
2 CANCEL
3 COAST
CONTROLLER ANTILOCK BRAKE
(8W-35-2)
VEHICLE SPEED SENSOR SIGNAL
TRANSMISSION CONTROL MODULE
(8W-31-10)
VEHICLE SPEED SENSOR SIGNAL
V37 22 RD/LG
Z123 22 BK/LB
S219
S218
C3
CLOCKSPRING
C1
G7 18 WT/OR
MTX
EATX
V37 20 RD/LG
C101
V37 20 PK/LG
Z123 20 BK/OR
C2
VEHICLE SPEED SENSOR SIGNAL
SPEED CONTROL SWITCH SIGNAL
POWERTRAIN CONTROL MODULE (SBEC)
(8W-30-24)
(8W-30-32)
G203
(8W-15-10)
G204
(8W-15-10)

8W-35 ANTILOCK BRAKES

Component	Page
Body Control Module	8W-35-2
Brake Fluid Level Switch	8W-35-5
Brake Lamp Switch	8W-35-3
Controller Antilock Brake	8W-35-2, 3, 4
Daytime Running Lamp Module	8W-35-5
Fuse 4	8W-35-2
Fuse 11	8W-35-3, 5
Fuse 15	8W-35-2
Fuse 22	8W-35-2
G103	8W-35-5
G113	8W-35-2
Instrument Cluster	8W-35-5
Junction Block	8W-35-2, 3, 5
Left Front Wheel Speed Sensor	8W-35-4
Left Rear Wheel Speed Sensor	8W-35-4
Park Brake Switch	8W-35-5
Power Distribution Center	8W-35-2, 3
Powertrain Control Module	8W-35-2
Right Front Wheel Speed Sensor	8W-35-4
Right Rear Wheel Speed Sensor	8W-35-4

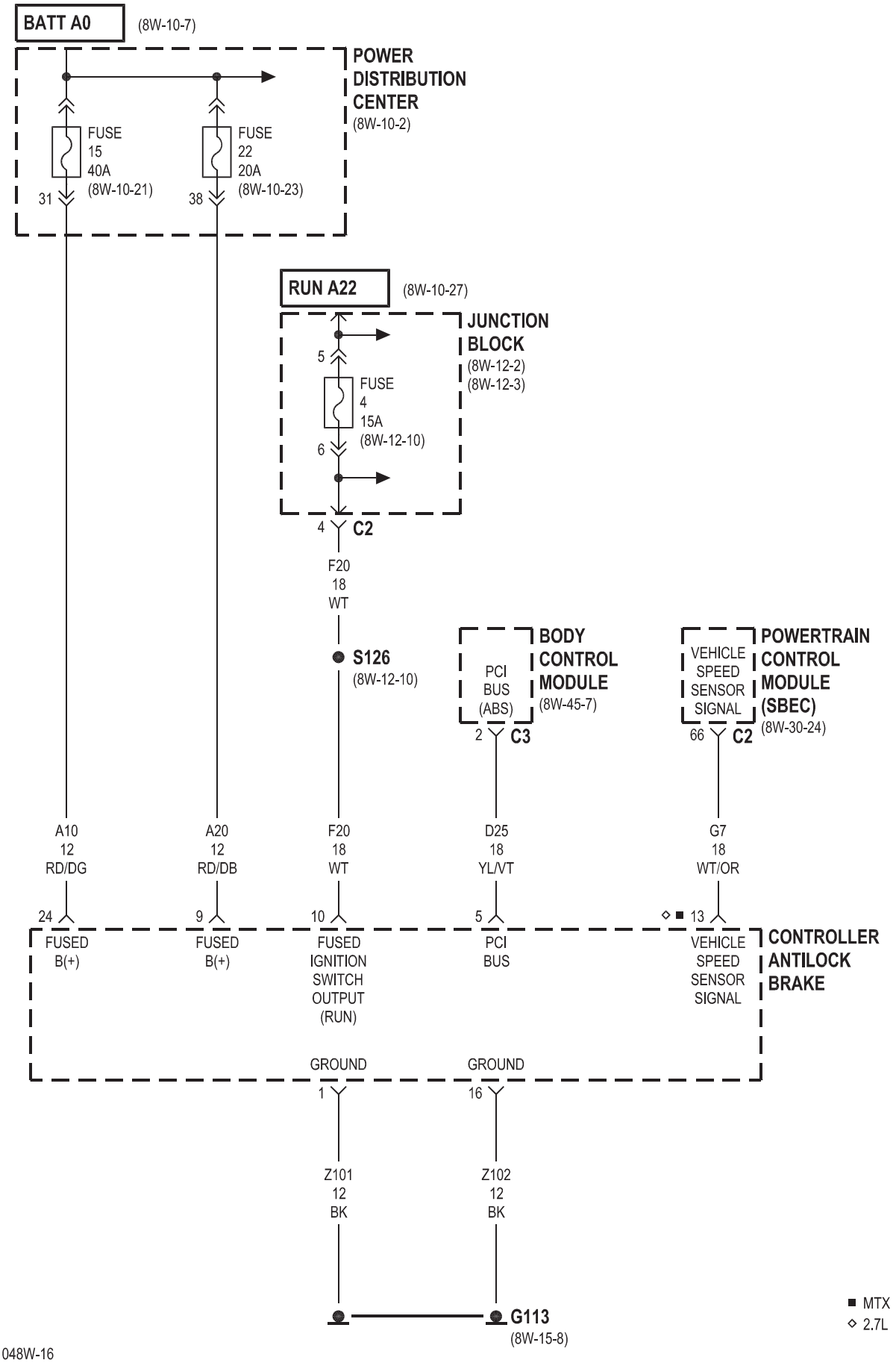
BATT A0
(8W-10-7)
POWER DISTRIBUTION CENTER
(8W-10-2)
FUSE 15 40A (8W-10-21)
FUSE 22 20A (8W-10-23)
31
38
RUN A22
(8W-10-27)
JUNCTION BLOCK
(8W-12-2)
(8W-12-3)
5
FUSE 4 15A (8W-12-10)
6
4
C2
F20 18 WT
S126
(8W-12-10)
PCI BUS (ABS)
BODY CONTROL MODULE
(8W-45-7)
2
C3
VEHICLE SPEED SENSOR SIGNAL
POWERTRAIN CONTROL MODULE (SBEC)
(8W-30-24)
66
C2
A10 12 RD/DG
A20 12 RD/DB
F20 18 WT
D25 18 YL/VT
G7 18 WT/OR
24
9
10
5
◇ ■ 13
FUSED B(+)
FUSED B(+)
FUSED IGNITION SWITCH OUTPUT (RUN)
PCI BUS
VEHICLE SPEED SENSOR SIGNAL
CONTROLLER ANTILOCK BRAKE
GROUND
1
GROUND
16
Z101 12 BK
Z102 12 BK
G113
(8W-15-8)
■ MTX
◇ 2.7L

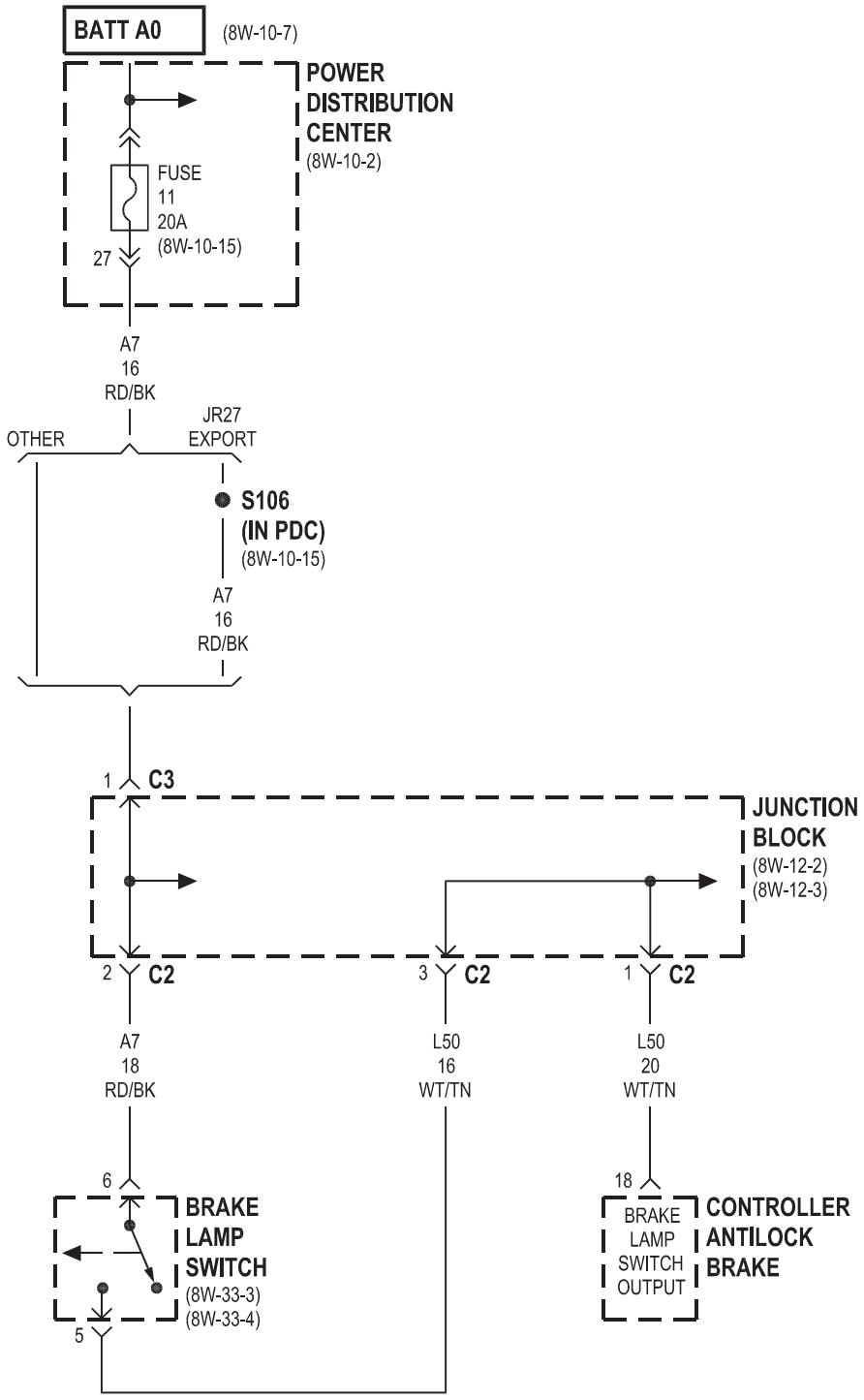
BATT A0
(8W-10-7)
POWER DISTRIBUTION CENTER
(8W-10-2)
FUSE
11
20A
(8W-10-15)
27
A7
16
RD/BK
OTHER
JR27
EXPORT
S106
(IN PDC)
(8W-10-15)
A7
16
RD/BK
1
C3
JUNCTION BLOCK
(8W-12-2)
(8W-12-3)
2
C2
3
C2
1
C2
A7
18
RD/BK
L50
16
WT/TN
L50
20
WT/TN
6
BRAKE LAMP SWITCH
(8W-33-3)
(8W-33-4)
5
18
BRAKE LAMP SWITCH OUTPUT
CONTROLLER ANTILOCK BRAKE

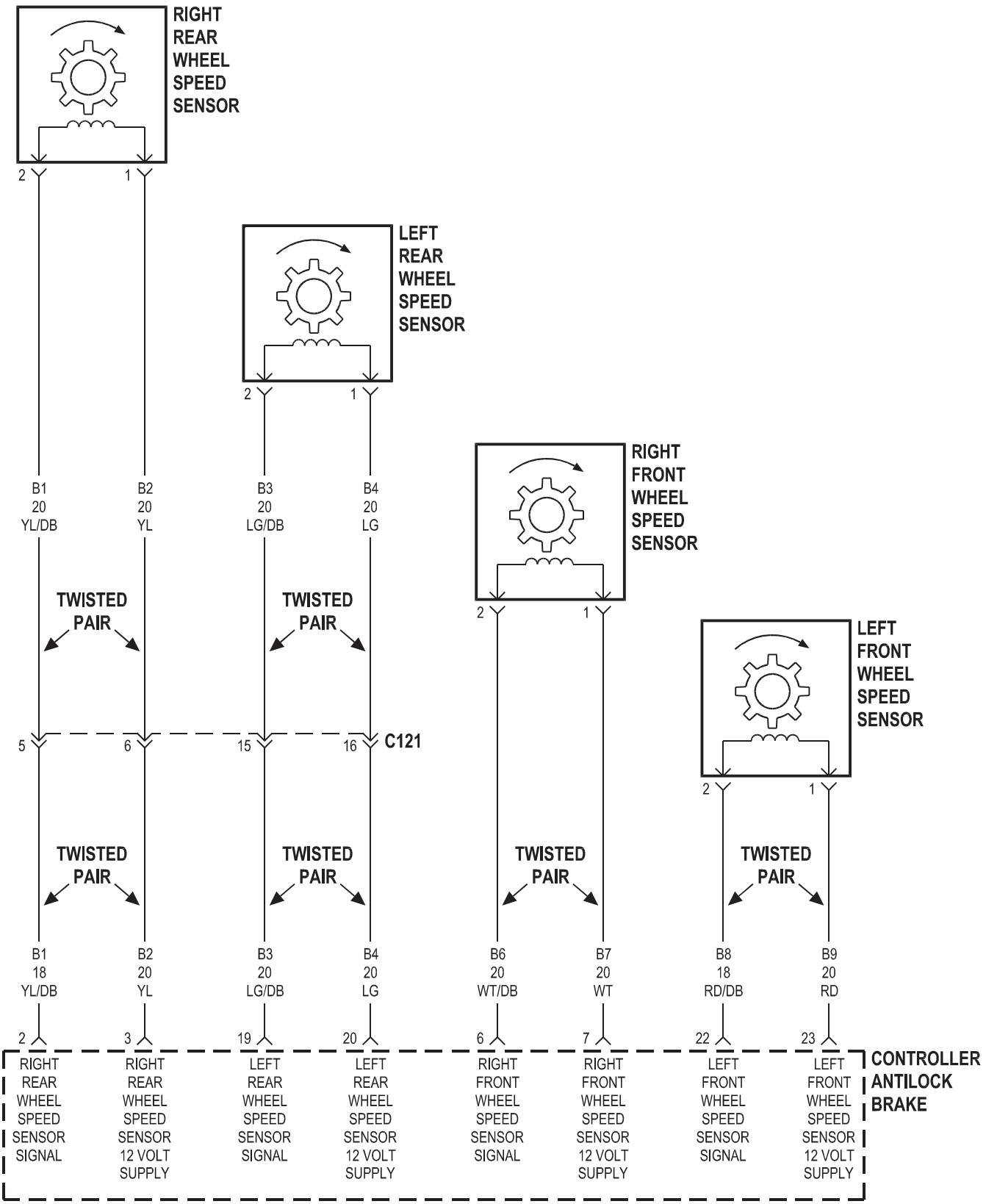
RIGHT REAR WHEEL SPEED SENSOR
2
1
LEFT REAR WHEEL SPEED SENSOR
2
1
RIGHT FRONT WHEEL SPEED SENSOR
2
1
LEFT FRONT WHEEL SPEED SENSOR
2
1
B1 20 YL/DB
B2 20 YL
B3 20 LG/DB
B4 20 LG
TWISTED PAIR
TWISTED PAIR
5
6
15
16
C121
TWISTED PAIR
TWISTED PAIR
TWISTED PAIR
TWISTED PAIR
B1 18 YL/DB
B2 20 YL
B3 20 LG/DB
B4 20 LG
B6 20 WT/DB
B7 20 WT
B8 18 RD/DB
B9 20 RD
2
3
19
20
6
7
22
23
RIGHT REAR WHEEL SPEED SENSOR SIGNAL
RIGHT REAR WHEEL SPEED SENSOR 12 VOLT SUPPLY
LEFT REAR WHEEL SPEED SENSOR SIGNAL
LEFT REAR WHEEL SPEED SENSOR 12 VOLT SUPPLY
RIGHT FRONT WHEEL SPEED SENSOR SIGNAL
RIGHT FRONT WHEEL SPEED SENSOR 12 VOLT SUPPLY
LEFT FRONT WHEEL SPEED SENSOR SIGNAL
LEFT FRONT WHEEL SPEED SENSOR 12 VOLT SUPPLY
CONTROLLER ANTILOCK BRAKE

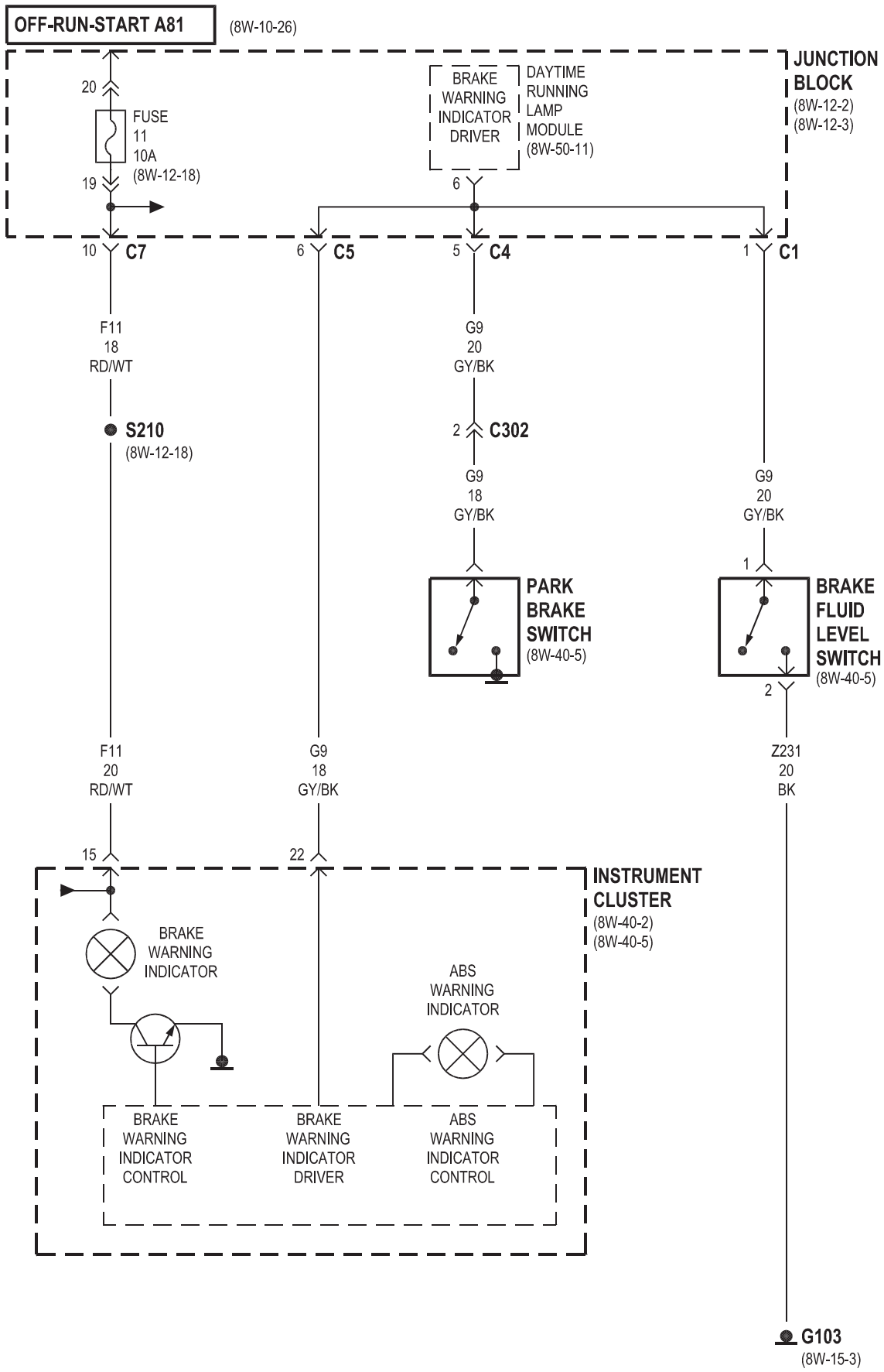
OFF-RUN-START A81
(8W-10-26)
JUNCTION BLOCK
(8W-12-2)
(8W-12-3)
20
FUSE 11 10A
(8W-12-18)
19
BRAKE WARNING INDICATOR DRIVER
DAYTIME RUNNING LAMP MODULE
(8W-50-11)
6
10 C7
6 C5
5 C4
1 C1
F11 18 RD/WT
S210
(8W-12-18)
G9 20 GY/BK
2 C302
G9 18 GY/BK
PARK BRAKE SWITCH
(8W-40-5)
G9 20 GY/BK
1
BRAKE FLUID LEVEL SWITCH
(8W-40-5)
2
F11 20 RD/WT
G9 18 GY/BK
Z231 20 BK
15
22
INSTRUMENT CLUSTER
(8W-40-2)
(8W-40-5)
BRAKE WARNING INDICATOR
ABS WARNING INDICATOR
BRAKE WARNING INDICATOR CONTROL
BRAKE WARNING INDICATOR DRIVER
ABS WARNING INDICATOR CONTROL
G103
(8W-15-3)

8W-39 VEHICLE THEFT SECURITY SYSTEM

Component	Page
Body Control Module	8W-39-2, 3, 4, 5, 6, 7
Decklid Cylinder Lock Switch	8W-39-3
Decklid Release Solenoid/Ajar Switch	8W-39-3
Driver Cylinder Lock Switch	8W-39-2
Driver Door Lock Motor/Ajar Switch	8W-39-4, 5
Driver Seat Belt Tensioner	8W-39-4
Fuse 5	8W-39-2
Fuse 7	8W-39-7
Fuse 8	8W-39-6
Fuse 10	8W-39-3
Fuse 23	8W-39-3
G203	8W-39-4, 5
G301	8W-39-3, 5
G302	8W-39-3
G310	8W-39-3
Headlamp Delay Relay	8W-39-6
Horn Relay	8W-39-6
Ignition Switch	8W-39-3
Instrument Cluster	8W-39-7
Junction Block	8W-39-2, 3, 6, 7
Left Lavalier Module	8W-39-6
Left Park/Turn Signal Lamp	8W-39-6
Left Rear Door Lock Motor/Ajar Switch	8W-39-5
Passenger Door Lock Motor/Ajar Switch	8W-39-4, 5
Power Distribution Center	8W-39-3
Powertrain Control Module	8W-39-7
Right Lavalier Module	8W-39-6
Right Park/Turn Signal Lamp	8W-39-6
Right Rear Door Lock Motor/Ajar Switch	8W-39-5
Sentry Key Immobilizer Module	8W-39-3

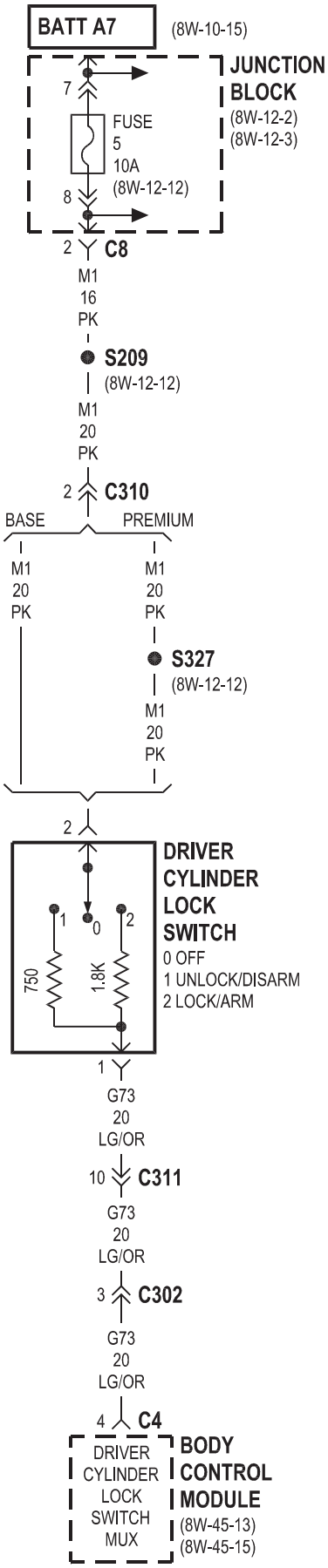
BATT A7
(8W-10-15)
JUNCTION BLOCK
(8W-12-2)
(8W-12-3)
7
FUSE 5 10A
(8W-12-12)
8
2
C8
M1 16 PK
S209
(8W-12-12)
M1 20 PK
2
C310
BASE
PREMIUM
M1 20 PK
M1 20 PK
S327
(8W-12-12)
M1 20 PK
2
DRIVER CYLINDER LOCK SWITCH
0 OFF
1 UNLOCK/DISARM
2 LOCK/ARM
1
0
2
750
1.8K
1
G73 20 LG/OR
10
C311
G73 20 LG/OR
3
C302
G73 20 LG/OR
4
C4
DRIVER CYLINDER LOCK SWITCH MUX
BODY CONTROL MODULE
(8W-45-13)
(8W-45-15)

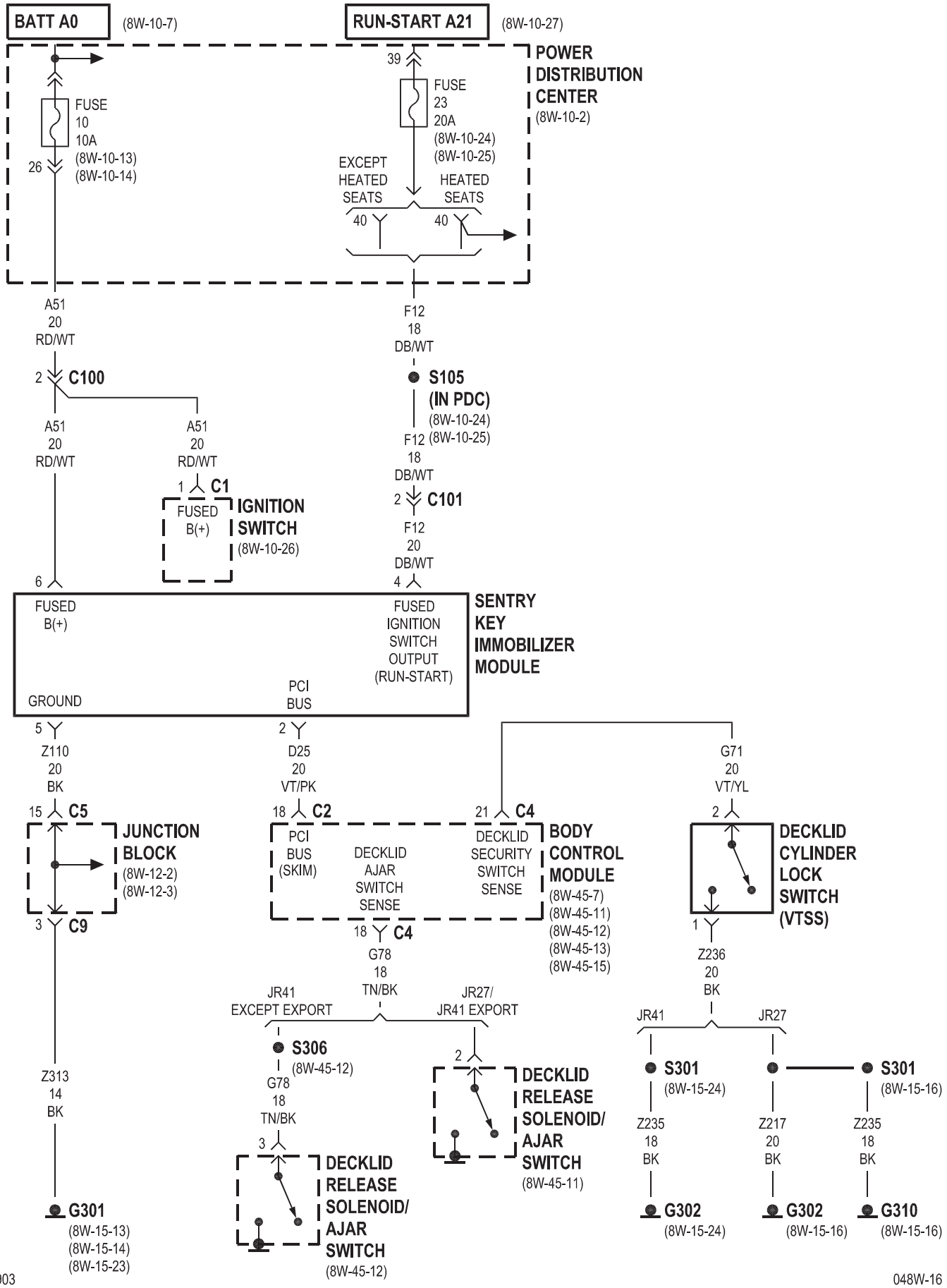
BATT A0
(8W-10-7)
RUN-START A21
(8W-10-27)
POWER DISTRIBUTION CENTER
(8W-10-2)
FUSE 10 10A
(8W-10-13)
(8W-10-14)
FUSE 23 20A
(8W-10-24)
(8W-10-25)
EXCEPT HEATED SEATS
HEATED SEATS
A51 20 RD/WT
F12 18 DB/WT
C100
S105 (IN PDC)
(8W-10-24)
(8W-10-25)
A51 20 RD/WT
A51 20 RD/WT
F12 18 DB/WT
C1
FUSED B(+)
IGNITION SWITCH
(8W-10-26)
C101
F12 20 DB/WT
FUSED B(+)
FUSED IGNITION SWITCH OUTPUT (RUN-START)
SENTRY KEY IMMOBILIZER MODULE
GROUND
PCI BUS
Z110 20 BK
D25 20 VT/PK
G71 20 VT/YL
C5
JUNCTION BLOCK
(8W-12-2)
(8W-12-3)
C2
PCI BUS (SKIM)
DECKLID AJAR SWITCH SENSE
C4
DECKLID SECURITY SWITCH SENSE
BODY CONTROL MODULE
(8W-45-7)
(8W-45-11)
(8W-45-12)
(8W-45-13)
(8W-45-15)
DECKLID CYLINDER LOCK SWITCH (VTSS)
C9
C4
G78 18 TN/BK
Z236 20 BK
JR41 EXCEPT EXPORT
JR27/ JR41 EXPORT
JR41
JR27
S306
(8W-45-12)
G78 18 TN/BK
DECKLID RELEASE SOLENOID/ AJAR SWITCH
(8W-45-11)
S301
(8W-15-24)
S301
(8W-15-16)
Z313 14 BK
Z235 18 BK
Z217 20 BK
Z235 18 BK
DECKLID RELEASE SOLENOID/ AJAR SWITCH
(8W-45-12)
G301
(8W-15-13)
(8W-15-14)
(8W-15-23)
G302
(8W-15-24)
G302
(8W-15-16)
G310
(8W-15-16)

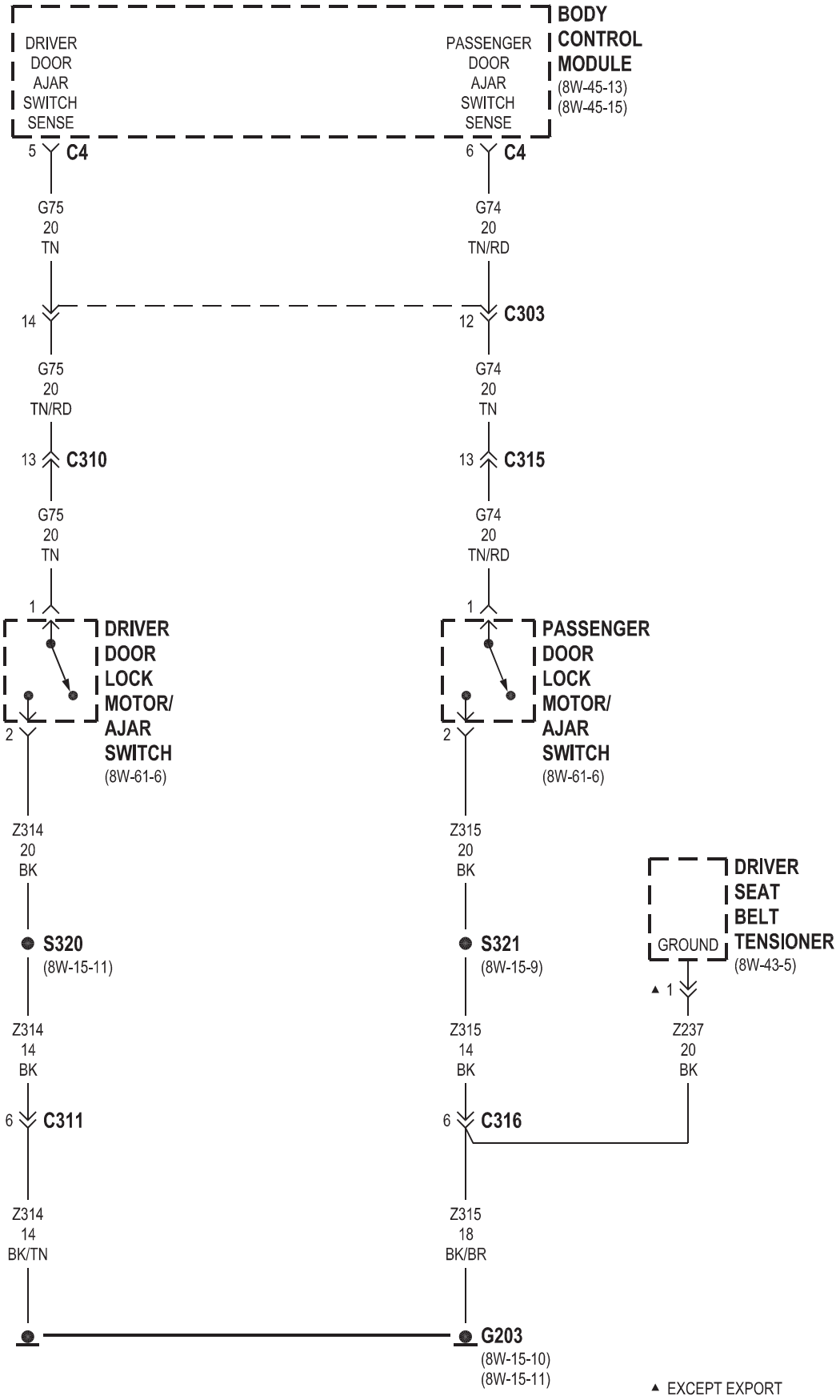
BODY CONTROL MODULE
(8W-45-13)
(8W-45-15)
DRIVER DOOR AJAR SWITCH SENSE
PASSENGER DOOR AJAR SWITCH SENSE
5 C4
6 C4
G75 20 TN
G74 20 TN/RD
14
12 C303
G75 20 TN/RD
G74 20 TN
13 C310
13 C315
G75 20 TN
G74 20 TN/RD
1
1
DRIVER DOOR LOCK MOTOR/ AJAR SWITCH
(8W-61-6)
PASSENGER DOOR LOCK MOTOR/ AJAR SWITCH
(8W-61-6)
2
2
Z314 20 BK
Z315 20 BK
DRIVER SEAT BELT TENSIONER
(8W-43-5)
GROUND
S320
(8W-15-11)
S321
(8W-15-9)
▲ 1
Z314 14 BK
Z315 14 BK
Z237 20 BK
6 C311
6 C316
Z314 14 BK/TN
Z315 18 BK/BR
G203
(8W-15-10)
(8W-15-11)
▲ EXCEPT EXPORT

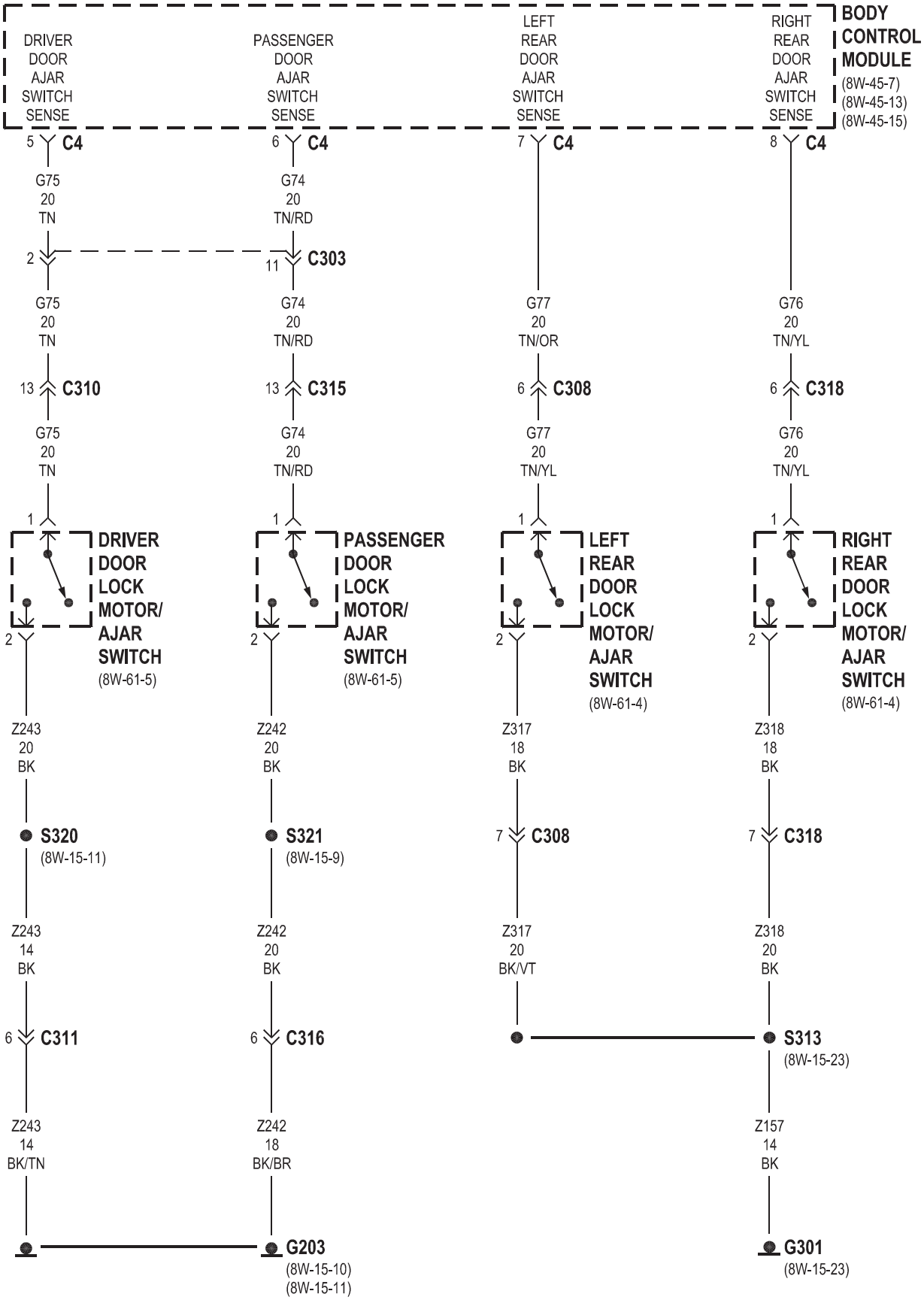
BODY CONTROL MODULE
(8W-45-7)
(8W-45-13)
(8W-45-15)
DRIVER DOOR AJAR SWITCH SENSE
PASSENGER DOOR AJAR SWITCH SENSE
LEFT REAR DOOR AJAR SWITCH SENSE
RIGHT REAR DOOR AJAR SWITCH SENSE
5 C4
6 C4
7 C4
8 C4
G75 20 TN
G74 20 TN/RD
2
11 C303
G75 20 TN
G74 20 TN/RD
G77 20 TN/OR
G76 20 TN/YL
13 C310
13 C315
6 C308
6 C318
G75 20 TN
G74 20 TN/RD
G77 20 TN/YL
G76 20 TN/YL
1
DRIVER DOOR LOCK MOTOR/ AJAR SWITCH
(8W-61-5)
PASSENGER DOOR LOCK MOTOR/ AJAR SWITCH
(8W-61-5)
LEFT REAR DOOR LOCK MOTOR/ AJAR SWITCH
(8W-61-4)
RIGHT REAR DOOR LOCK MOTOR/ AJAR SWITCH
(8W-61-4)
2
Z243 20 BK
Z242 20 BK
Z317 18 BK
Z318 18 BK
S320
(8W-15-11)
S321
(8W-15-9)
7 C308
7 C318
Z243 14 BK
Z242 20 BK
Z317 20 BK/VT
Z318 20 BK
6 C311
6 C316
S313
(8W-15-23)
Z243 14 BK/TN
Z242 18 BK/BR
Z157 14 BK
G203
(8W-15-10)
(8W-15-11)
G301
(8W-15-23)

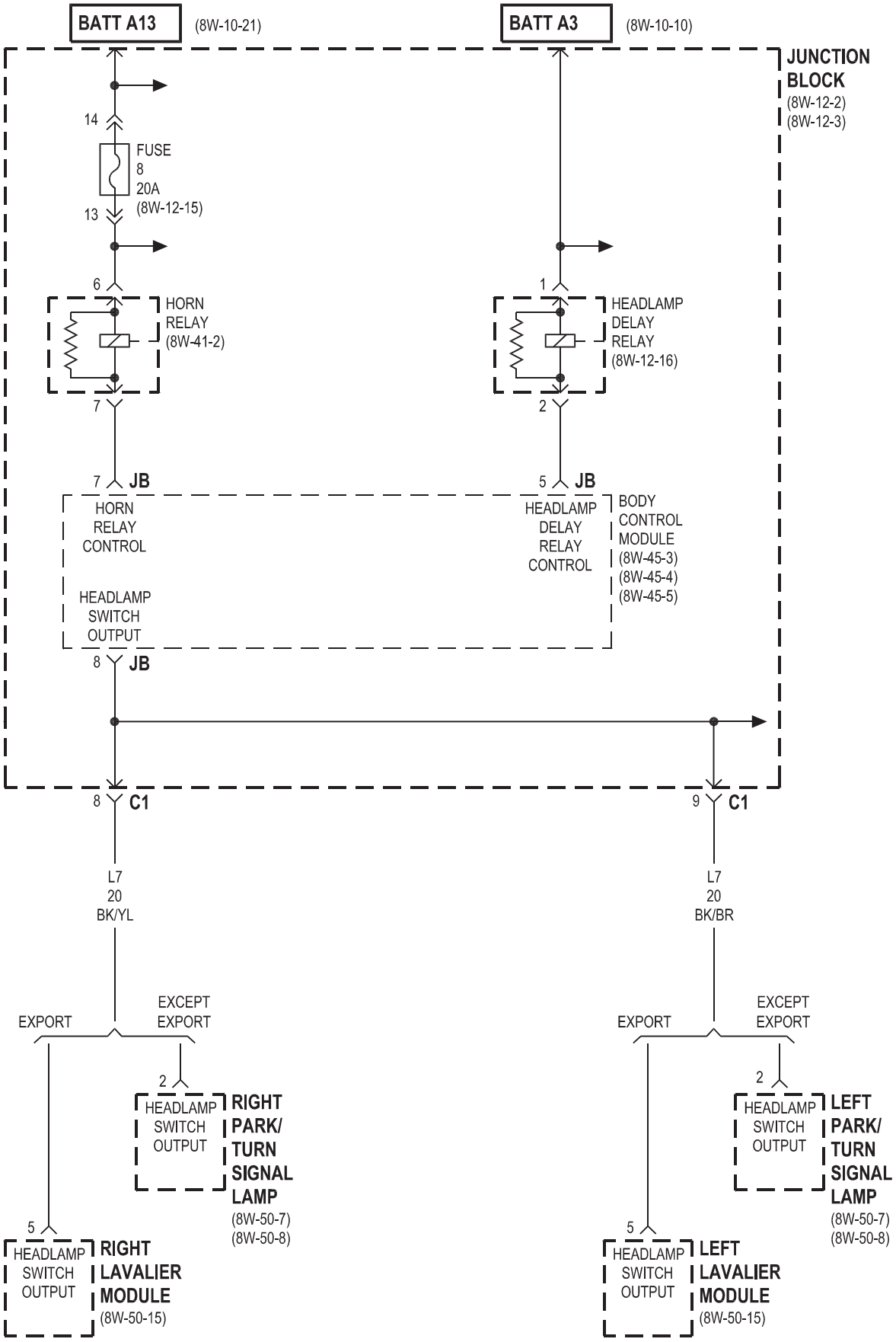
BATT A13
(8W-10-21)
BATT A3
(8W-10-10)
JUNCTION BLOCK
(8W-12-2)
(8W-12-3)
14
FUSE
8
20A
(8W-12-15)
13
6
HORN RELAY
(8W-41-2)
7
1
HEADLAMP DELAY RELAY
(8W-12-16)
2
7 JB
HORN RELAY CONTROL
HEADLAMP SWITCH OUTPUT
5 JB
HEADLAMP DELAY RELAY CONTROL
BODY CONTROL MODULE
(8W-45-3)
(8W-45-4)
(8W-45-5)
8 JB
8 C1
9 C1
L7
20
BK/YL
L7
20
BK/BR
EXPORT
EXCEPT EXPORT
2
HEADLAMP SWITCH OUTPUT
RIGHT PARK/ TURN SIGNAL LAMP
(8W-50-7)
(8W-50-8)
5
HEADLAMP SWITCH OUTPUT
RIGHT LAVALIER MODULE
(8W-50-15)
EXPORT
EXCEPT EXPORT
2
HEADLAMP SWITCH OUTPUT
LEFT PARK/ TURN SIGNAL LAMP
(8W-50-7)
(8W-50-8)
5
HEADLAMP SWITCH OUTPUT
LEFT LAVALIER MODULE
(8W-50-15)

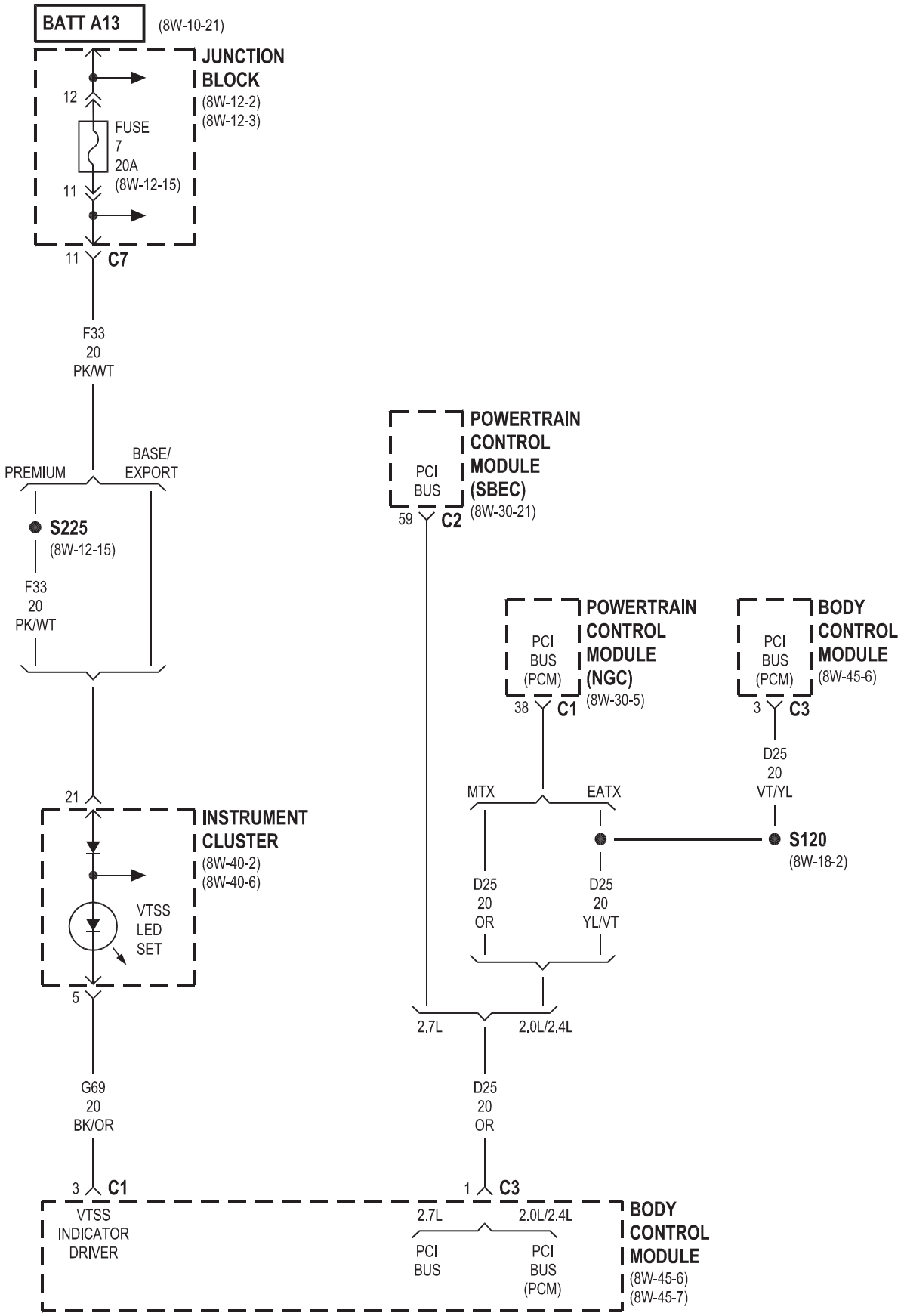
BATT A13
(8W-10-21)
JUNCTION BLOCK
(8W-12-2)
(8W-12-3)
12
FUSE 7 20A
(8W-12-15)
11
11
C7
F33 20 PK/WT
PREMIUM
BASE/ EXPORT
S225
(8W-12-15)
F33 20 PK/WT
POWERTRAIN CONTROL MODULE (SBEC)
(8W-30-21)
PCI BUS
59
C2
POWERTRAIN CONTROL MODULE (NGC)
(8W-30-5)
PCI BUS (PCM)
38
C1
BODY CONTROL MODULE
(8W-45-6)
PCI BUS (PCM)
3
C3
D25 20 VT/YL
MTX
EATX
S120
(8W-18-2)
D25 20 OR
D25 20 YL/VT
2.7L
2.0L/2.4L
21
INSTRUMENT CLUSTER
(8W-40-2)
(8W-40-6)
VTSS LED SET
5
G69 20 BK/OR
D25 20 OR
3
C1
1
C3
VTSS INDICATOR DRIVER
2.7L
2.0L/2.4L
PCI BUS
PCI BUS (PCM)
BODY CONTROL MODULE
(8W-45-6)
(8W-45-7)

8W-40 INSTRUMENT CLUSTER

Component	Page
Airbag Control Module	8W-40-4
Body Control Module	8W-40-2, 3, 4, 6, 8
Brake Fluid Level Switch	8W-40-5
Brake Transmission Shift Interlock Solenoid	8W-40-8
Compass/Mini-Trip Computer	8W-40-7, 8
Daytime Running Lamp Module	8W-40-5
Driver Seat Belt Switch	8W-40-4
Driver Seat Belt Tensioner	8W-40-4
Fuel Pump Module	8W-40-4
Fuse 4	8W-40-8
Fuse 5	8W-40-8
Fuse 7	8W-40-2, 6
Fuse 11	8W-40-2, 5
G103	8W-40-5
G203	8W-40-4, 5, 7
G300	8W-40-4
G301	8W-40-2, 6
G302	8W-40-4
Instrument Cluster	8W-40-2, 3, 4, 5, 6, 7, 8
Junction Block	8W-40-2, 5, 6, 7, 8
Multi-Function Switch	8W-40-7
Oil Pressure Switch	8W-40-5
Park Brake Switch	8W-40-5
Powertrain Control Module	8W-40-3
Radio	8W-40-8
Traction Control Switch	8W-40-5
Window Drop Relay Assembly	8W-40-8

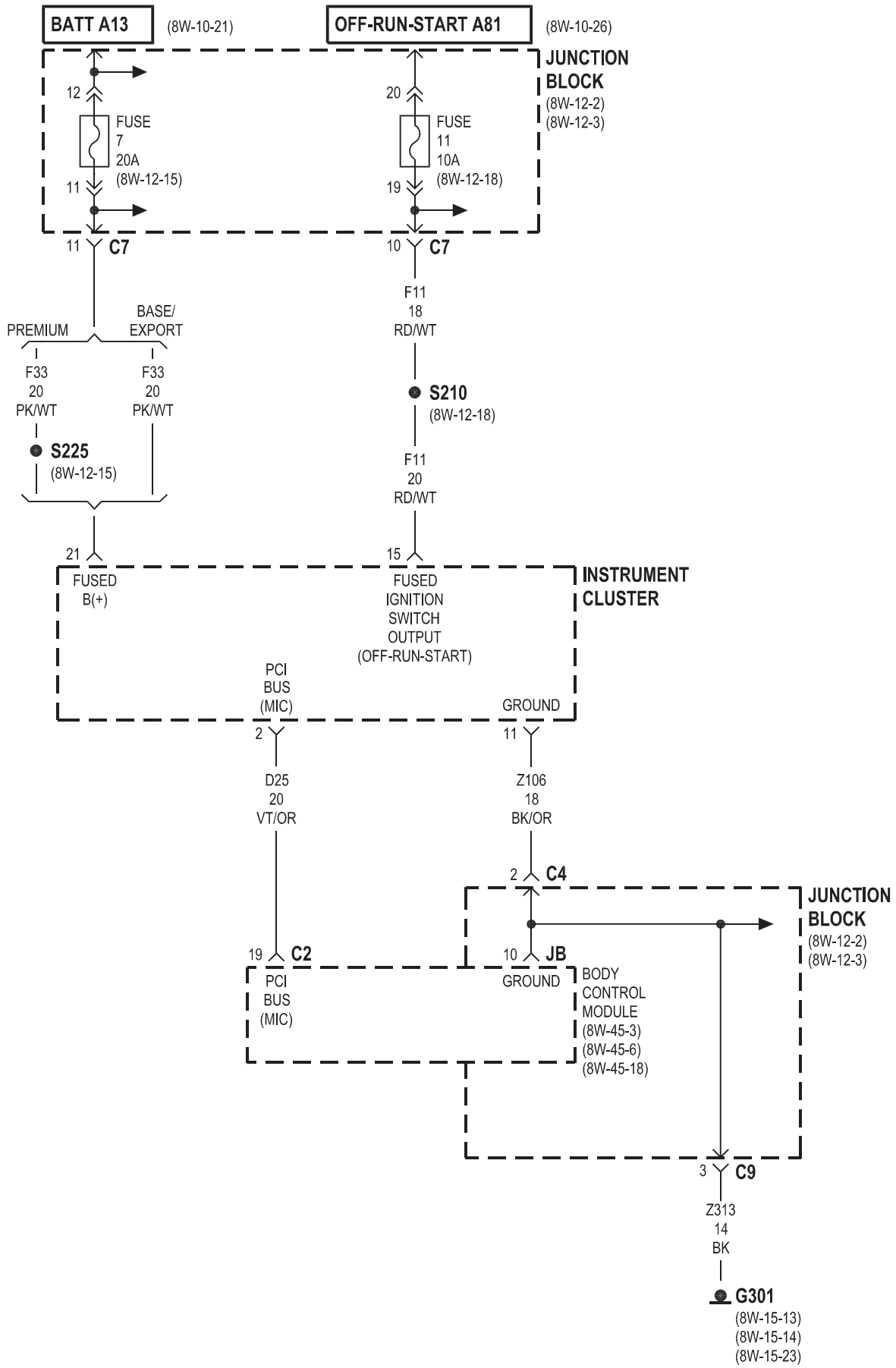
BATT A13
(8W-10-21)
OFF-RUN-START A81
(8W-10-26)
JUNCTION BLOCK
(8W-12-2)
(8W-12-3)
12
FUSE 7 20A
(8W-12-15)
11
20
FUSE 11 10A
(8W-12-18)
19
11 C7
10 C7
F11 18 RD/WT
PREMIUM
BASE/ EXPORT
F33 20 PK/WT
F33 20 PK/WT
S210
(8W-12-18)
S225
(8W-12-15)
F11 20 RD/WT
21
15
FUSED B(+)
FUSED IGNITION SWITCH OUTPUT (OFF-RUN-START)
INSTRUMENT CLUSTER
PCI BUS (MIC)
GROUND
2
11
D25 20 VT/OR
Z106 18 BK/OR
2 C4
JUNCTION BLOCK
(8W-12-2)
(8W-12-3)
19 C2
10 JB
PCI BUS (MIC)
GROUND
BODY CONTROL MODULE
(8W-45-3)
(8W-45-6)
(8W-45-18)
3 C9
Z313 14 BK
G301
(8W-15-13)
(8W-15-14)
(8W-15-23)

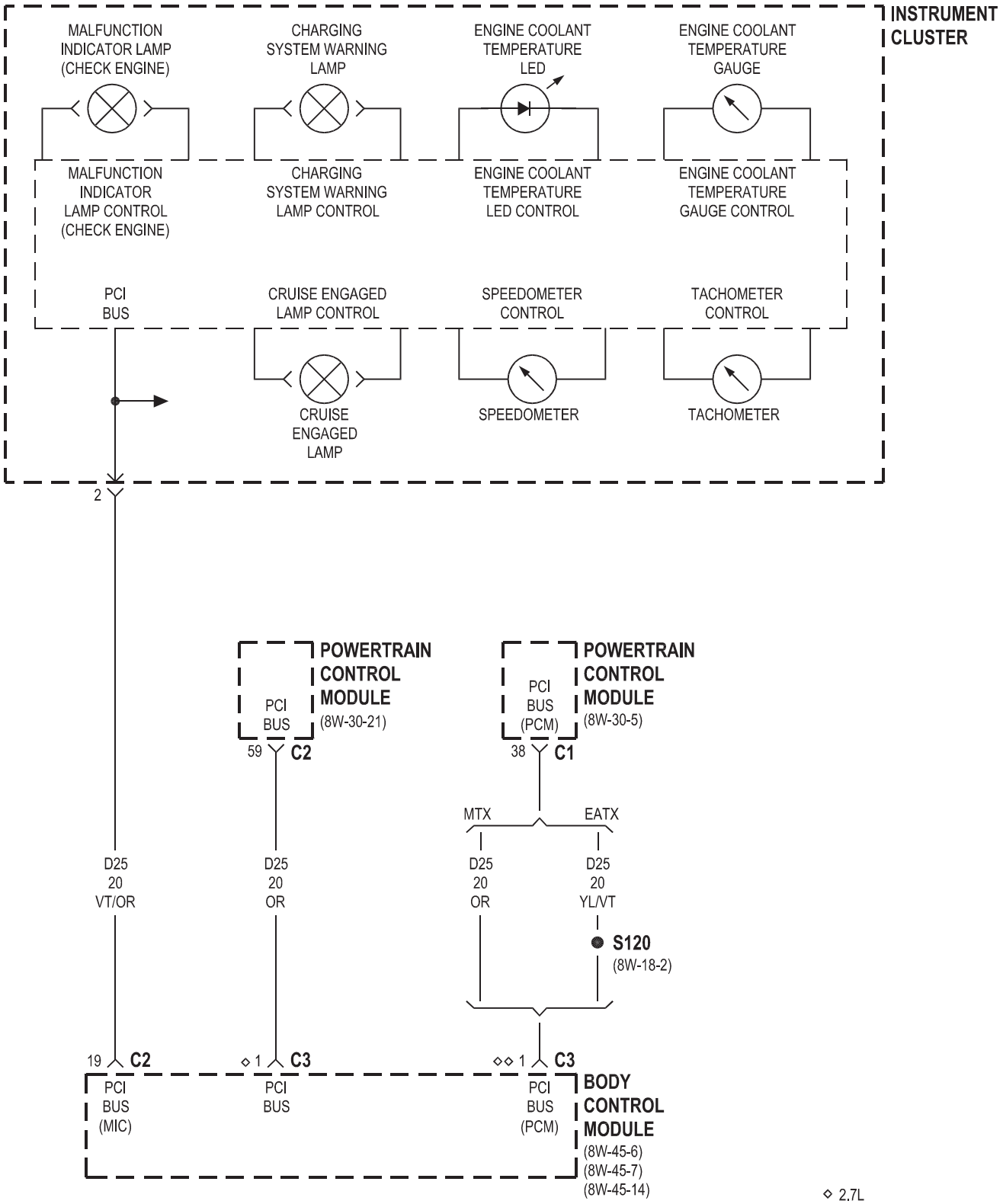
INSTRUMENT CLUSTER
MALFUNCTION INDICATOR LAMP (CHECK ENGINE)
CHARGING SYSTEM WARNING LAMP
ENGINE COOLANT TEMPERATURE LED
ENGINE COOLANT TEMPERATURE GAUGE
MALFUNCTION INDICATOR LAMP CONTROL (CHECK ENGINE)
CHARGING SYSTEM WARNING LAMP CONTROL
ENGINE COOLANT TEMPERATURE LED CONTROL
ENGINE COOLANT TEMPERATURE GAUGE CONTROL
PCI BUS
CRUISE ENGAGED LAMP CONTROL
SPEEDOMETER CONTROL
TACHOMETER CONTROL
CRUISE ENGAGED LAMP
SPEEDOMETER
TACHOMETER
2
POWERTRAIN CONTROL MODULE (8W-30-21)
PCI BUS
59 C2
POWERTRAIN CONTROL MODULE (8W-30-5)
PCI BUS (PCM)
38 C1
MTX
EATX
D25 20 VT/OR
D25 20 OR
D25 20 OR
D25 20 YL/VT
S120 (8W-18-2)
19 C2
◇ 1 C3
◇◇ 1 C3
PCI BUS (MIC)
PCI BUS
PCI BUS (PCM)
BODY CONTROL MODULE (8W-45-6) (8W-45-7) (8W-45-14)
◇ 2.7L
◇◇ 2.0L/2.4L

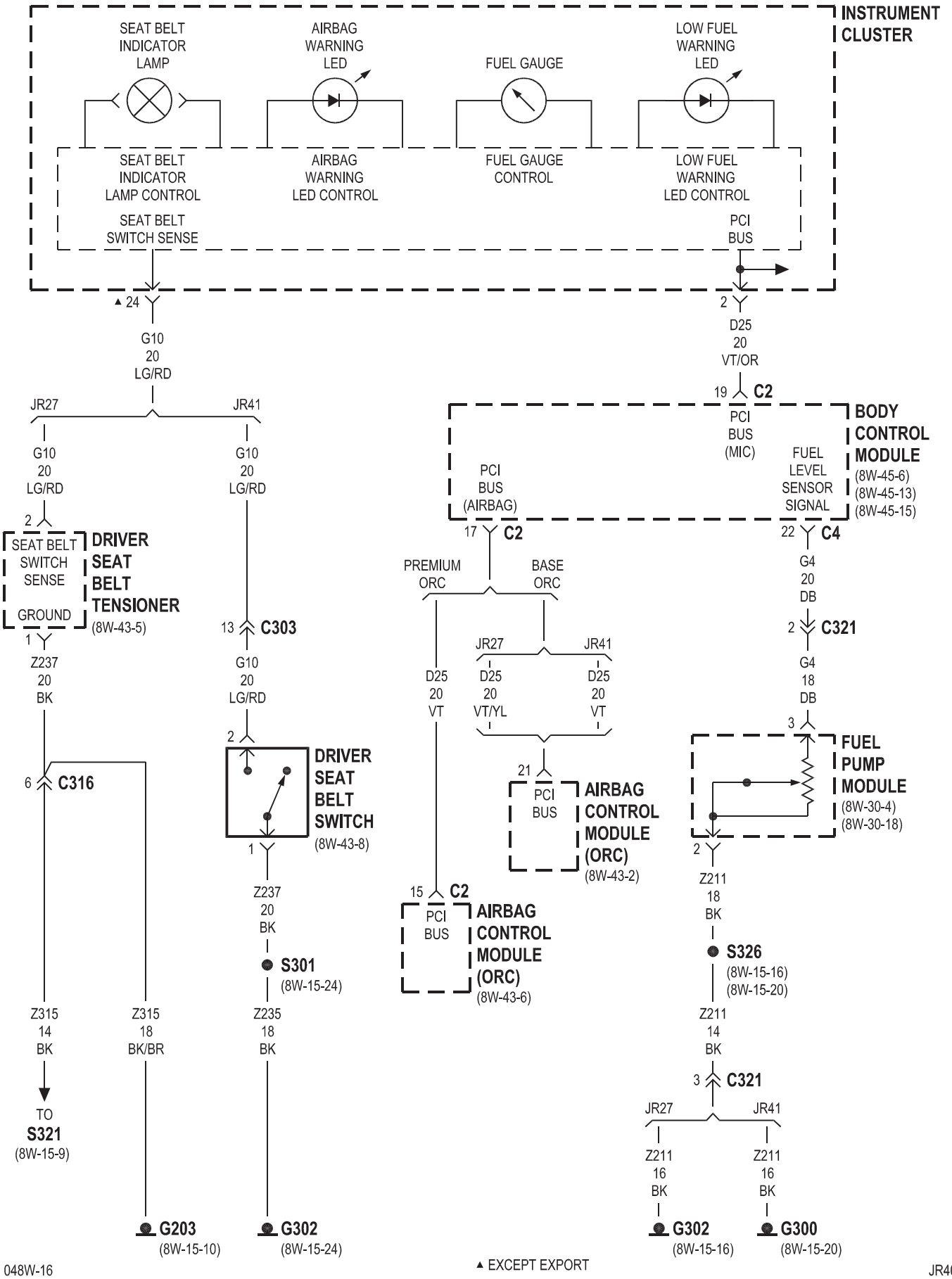

▲ EXCEPT EXPORT

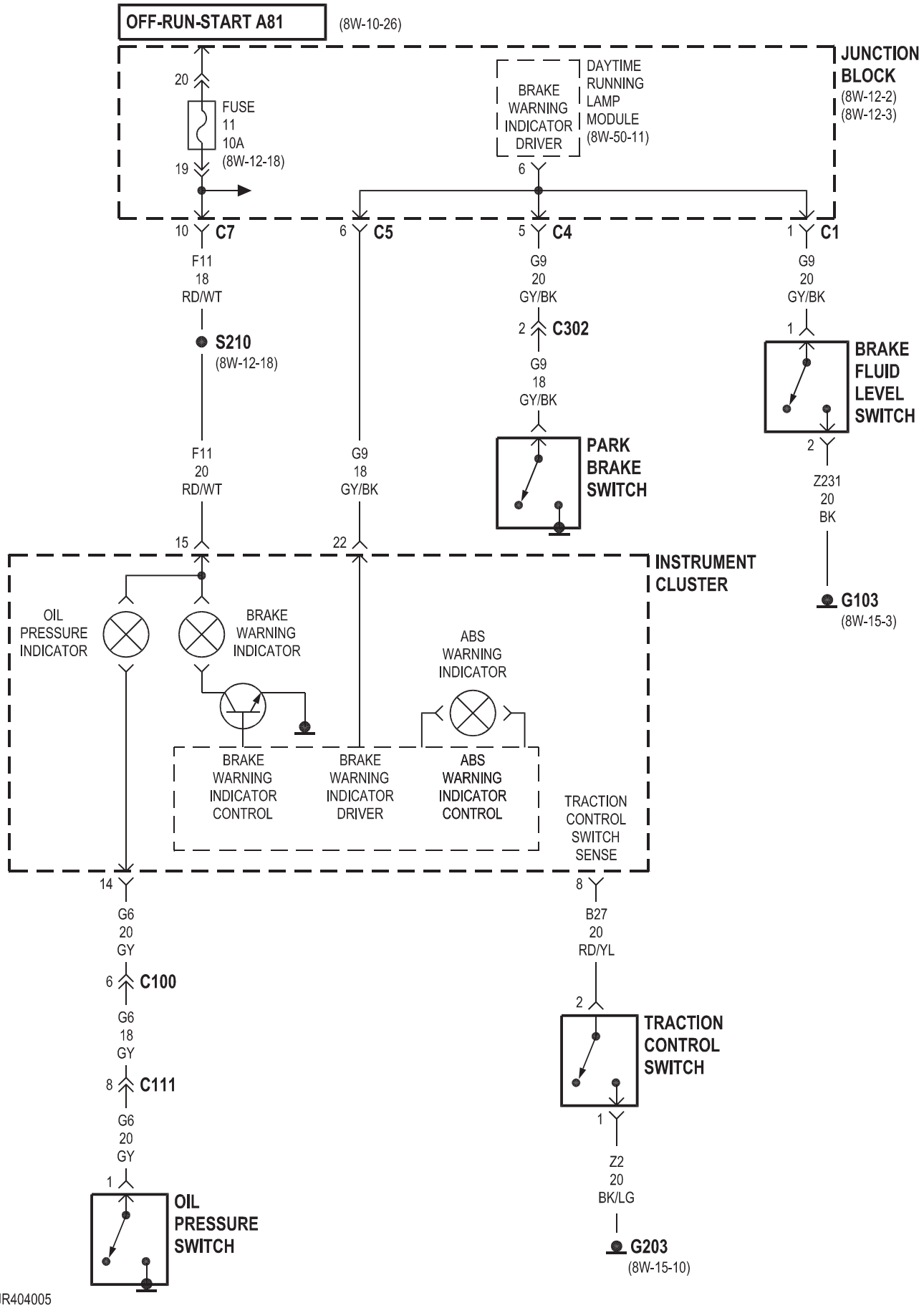
OFF-RUN-START A81
(8W-10-26)
JUNCTION BLOCK
(8W-12-2)
(8W-12-3)
20
FUSE 11 10A
(8W-12-18)
19
BRAKE WARNING INDICATOR DRIVER
DAYTIME RUNNING LAMP MODULE
(8W-50-11)
6
10 C7
6 C5
5 C4
1 C1
F11 18 RD/WT
S210
(8W-12-18)
F11 20 RD/WT
G9 18 GY/BK
G9 20 GY/BK
2 C302
G9 18 GY/BK
PARK BRAKE SWITCH
G9 20 GY/BK
1
BRAKE FLUID LEVEL SWITCH
2
Z231 20 BK
G103
(8W-15-3)
15
22
INSTRUMENT CLUSTER
OIL PRESSURE INDICATOR
BRAKE WARNING INDICATOR
ABS WARNING INDICATOR
BRAKE WARNING INDICATOR CONTROL
BRAKE WARNING INDICATOR DRIVER
ABS WARNING INDICATOR CONTROL
TRACTION CONTROL SWITCH SENSE
14
8
G6 20 GY
6 C100
G6 18 GY
8 C111
G6 20 GY
1
OIL PRESSURE SWITCH
B27 20 RD/YL
2
TRACTION CONTROL SWITCH
1
Z2 20 BK/LG
G203
(8W-15-10)

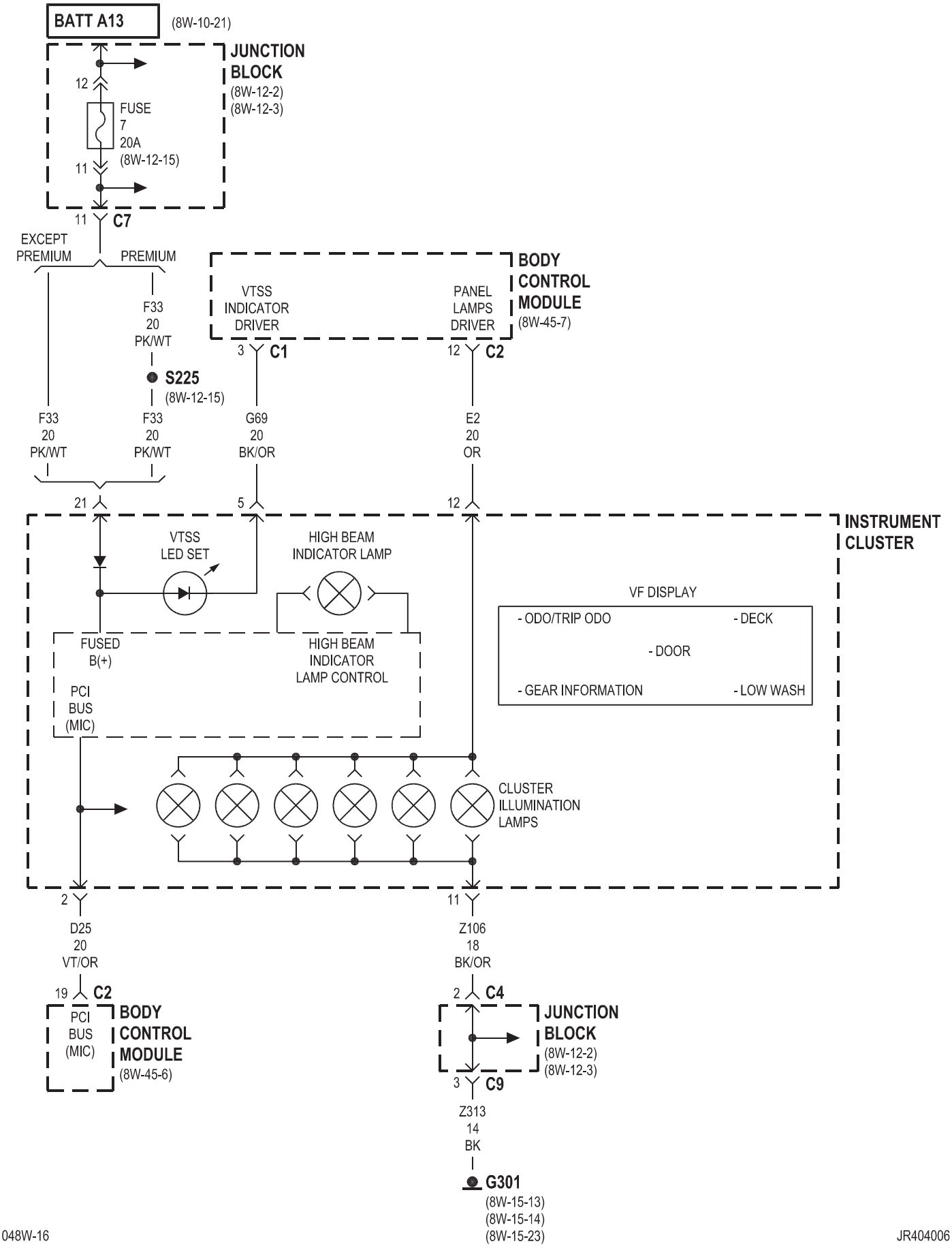
BATT A13
(8W-10-21)
JUNCTION BLOCK
(8W-12-2)
(8W-12-3)
12
FUSE
7
20A
(8W-12-15)
11
11
C7
EXCEPT PREMIUM
PREMIUM
F33
20
PK/WT
S225
(8W-12-15)
BODY CONTROL MODULE
(8W-45-7)
VTSS INDICATOR DRIVER
PANEL LAMPS DRIVER
3
C1
12
C2
F33
20
PK/WT
F33
20
PK/WT
G69
20
BK/OR
E2
20
OR
21
5
12
INSTRUMENT CLUSTER
VTSS LED SET
HIGH BEAM INDICATOR LAMP
VF DISPLAY
- ODO/TRIP ODO
- DECK
- DOOR
- GEAR INFORMATION
- LOW WASH
FUSED B(+)
HIGH BEAM INDICATOR LAMP CONTROL
PCI BUS (MIC)
CLUSTER ILLUMINATION LAMPS
2
11
D25
20
VT/OR
Z106
18
BK/OR
19
C2
PCI BUS (MIC)
BODY CONTROL MODULE
(8W-45-6)
2
C4
JUNCTION BLOCK
(8W-12-2)
(8W-12-3)
3
C9
Z313
14
BK
G301
(8W-15-13)
(8W-15-14)
(8W-15-23)

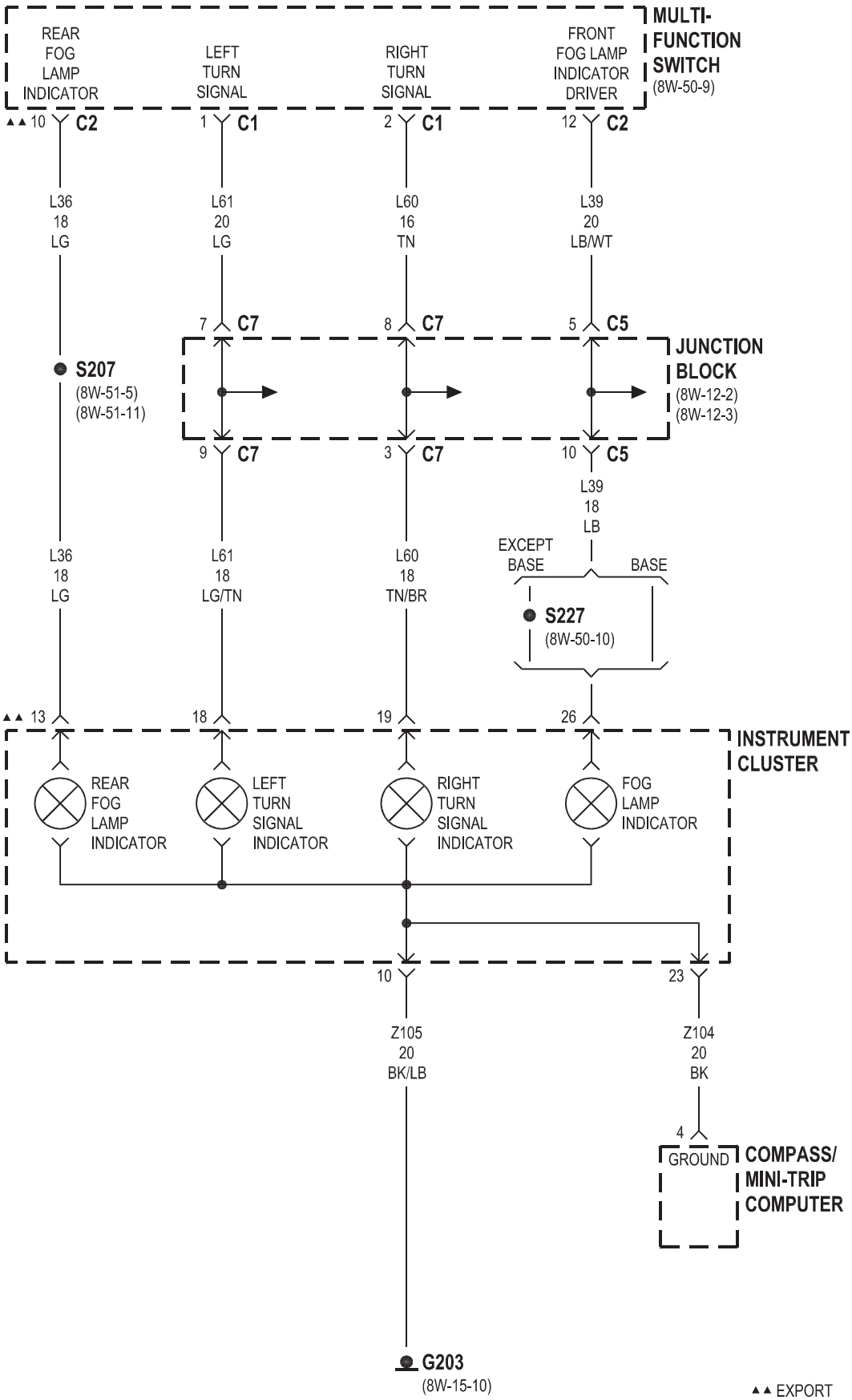
MULTI-FUNCTION SWITCH
(8W-50-9)
REAR FOG LAMP INDICATOR
LEFT TURN SIGNAL
RIGHT TURN SIGNAL
FRONT FOG LAMP INDICATOR DRIVER
▲▲ 10 C2
1 C1
2 C1
12 C2
L36 18 LG
L61 20 LG
L60 16 TN
L39 20 LB/WT
7 C7
8 C7
5 C5
S207
(8W-51-5)
(8W-51-11)
JUNCTION BLOCK
(8W-12-2)
(8W-12-3)
9 C7
3 C7
10 C5
L39 18 LB
EXCEPT BASE
BASE
L36 18 LG
L61 18 LG/TN
L60 18 TN/BR
S227
(8W-50-10)
▲▲ 13
18
19
26
INSTRUMENT CLUSTER
REAR FOG LAMP INDICATOR
LEFT TURN SIGNAL INDICATOR
RIGHT TURN SIGNAL INDICATOR
FOG LAMP INDICATOR
10
23
Z105 20 BK/LB
Z104 20 BK
4
GROUND
COMPASS/ MINI-TRIP COMPUTER
G203
(8W-15-10)

▲▲ EXPORT

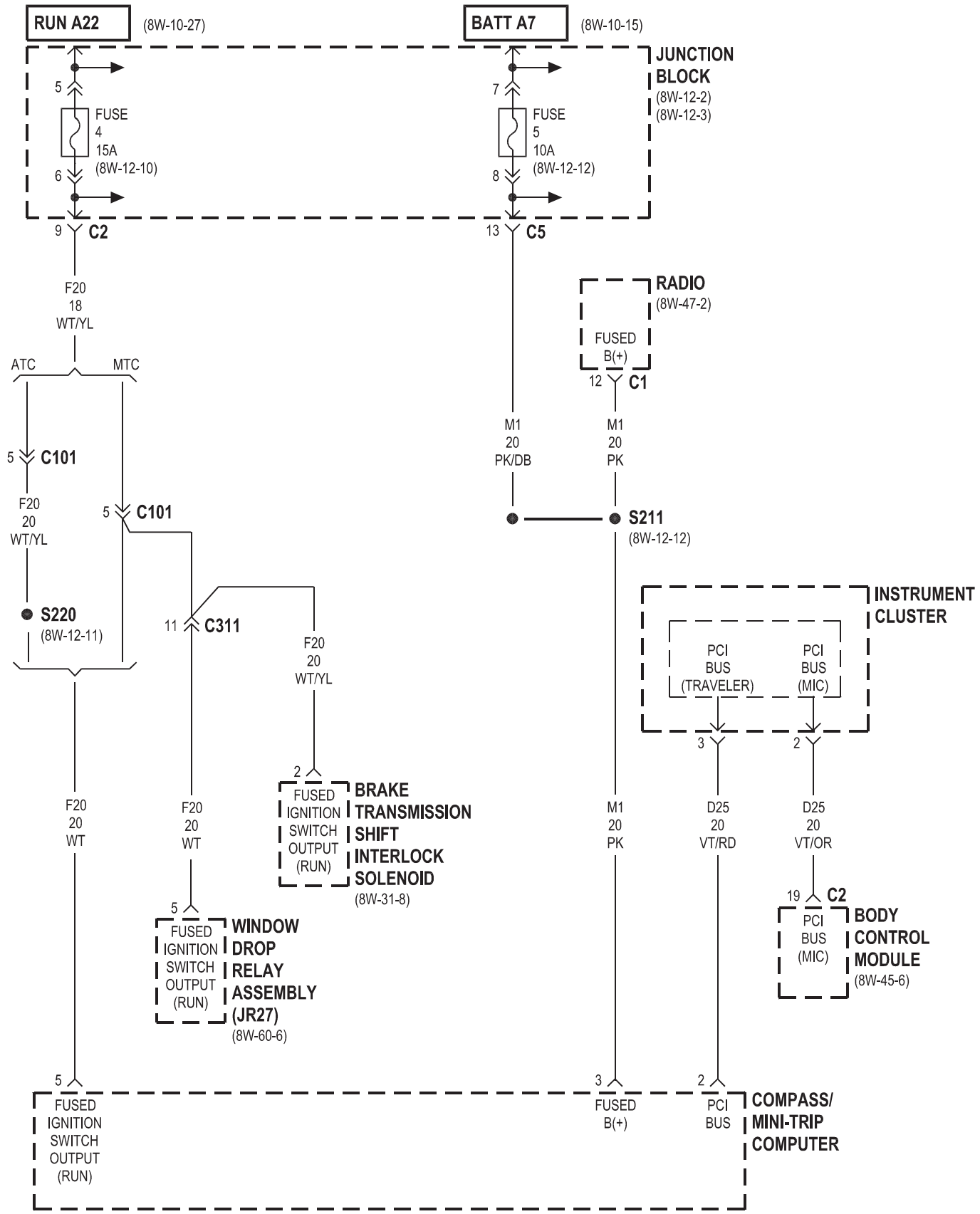
RUN A22
(8W-10-27)
BATT A7
(8W-10-15)
JUNCTION BLOCK
(8W-12-2)
(8W-12-3)
5
FUSE 4 15A
(8W-12-10)
6
7
FUSE 5 10A
(8W-12-12)
8
9 C2
13 C5
F20 18 WT/YL
RADIO
(8W-47-2)
FUSED B(+)
12 C1
ATC
MTC
5 C101
M1 20 PK/DB
M1 20 PK
F20 20 WT/YL
5 C101
S211
(8W-12-12)
S220
(8W-12-11)
11 C311
F20 20 WT/YL
INSTRUMENT CLUSTER
PCI BUS (TRAVELER)
PCI BUS (MIC)
3
2
2
FUSED IGNITION SWITCH OUTPUT (RUN)
BRAKE TRANSMISSION SHIFT INTERLOCK SOLENOID
(8W-31-8)
F20 20 WT
F20 20 WT
M1 20 PK
D25 20 VT/RD
D25 20 VT/OR
5
FUSED IGNITION SWITCH OUTPUT (RUN)
WINDOW DROP RELAY ASSEMBLY (JR27)
(8W-60-6)
19 C2
PCI BUS (MIC)
BODY CONTROL MODULE
(8W-45-6)
5
FUSED IGNITION SWITCH OUTPUT (RUN)
3
FUSED B(+)
2
PCI BUS
COMPASS/ MINI-TRIP COMPUTER

8W-41 HORN/CIGAR LIGHTER/POWER OUTLET

Component	Page
Body Control Module	8W-41-2
Cigar Lighter/Power Outlet	8W-41-3
Clockspring	8W-41-2
Fuse 2	8W-41-3
Fuse 8	8W-41-2
G106	8W-41-2
G202	8W-41-3
G301	8W-41-3
Horn	8W-41-2
Horn Relay	8W-41-2
Horn Switch	8W-41-2
Junction Block	8W-41-2
Power Distribution Center	8W-41-3
Power Outlet	8W-41-3

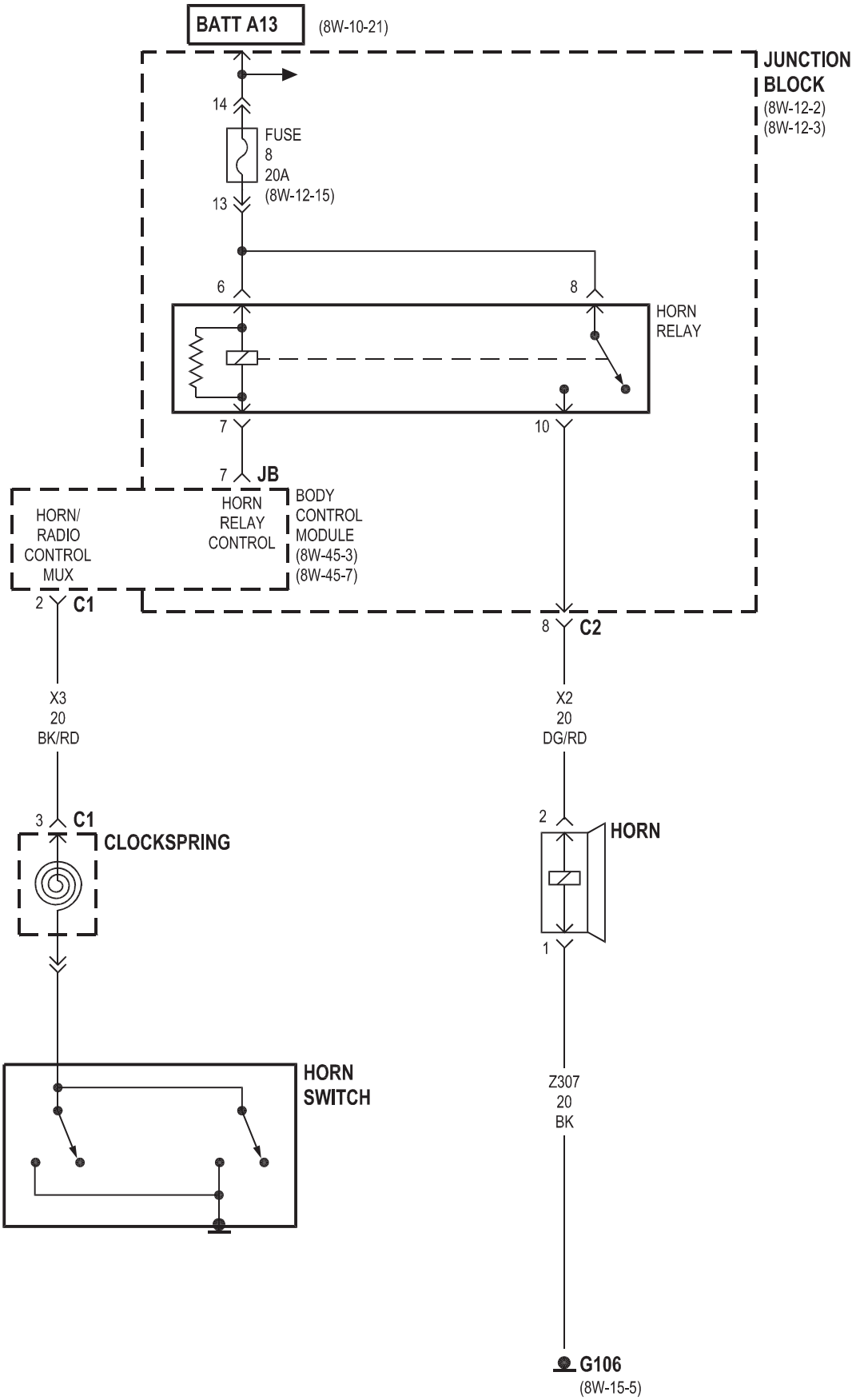
BATT A13
(8W-10-21)
JUNCTION BLOCK
(8W-12-2)
(8W-12-3)
14
FUSE
8
20A
(8W-12-15)
13
6
8
HORN RELAY
7
10
7
JB
HORN/ RADIO CONTROL MUX
HORN RELAY CONTROL
BODY CONTROL MODULE
(8W-45-3)
(8W-45-7)
2
C1
8
C2
X3
20
BK/RD
X2
20
DG/RD
3
C1
CLOCKSPRING
2
HORN
1
HORN SWITCH
Z307
20
BK
G106
(8W-15-5)

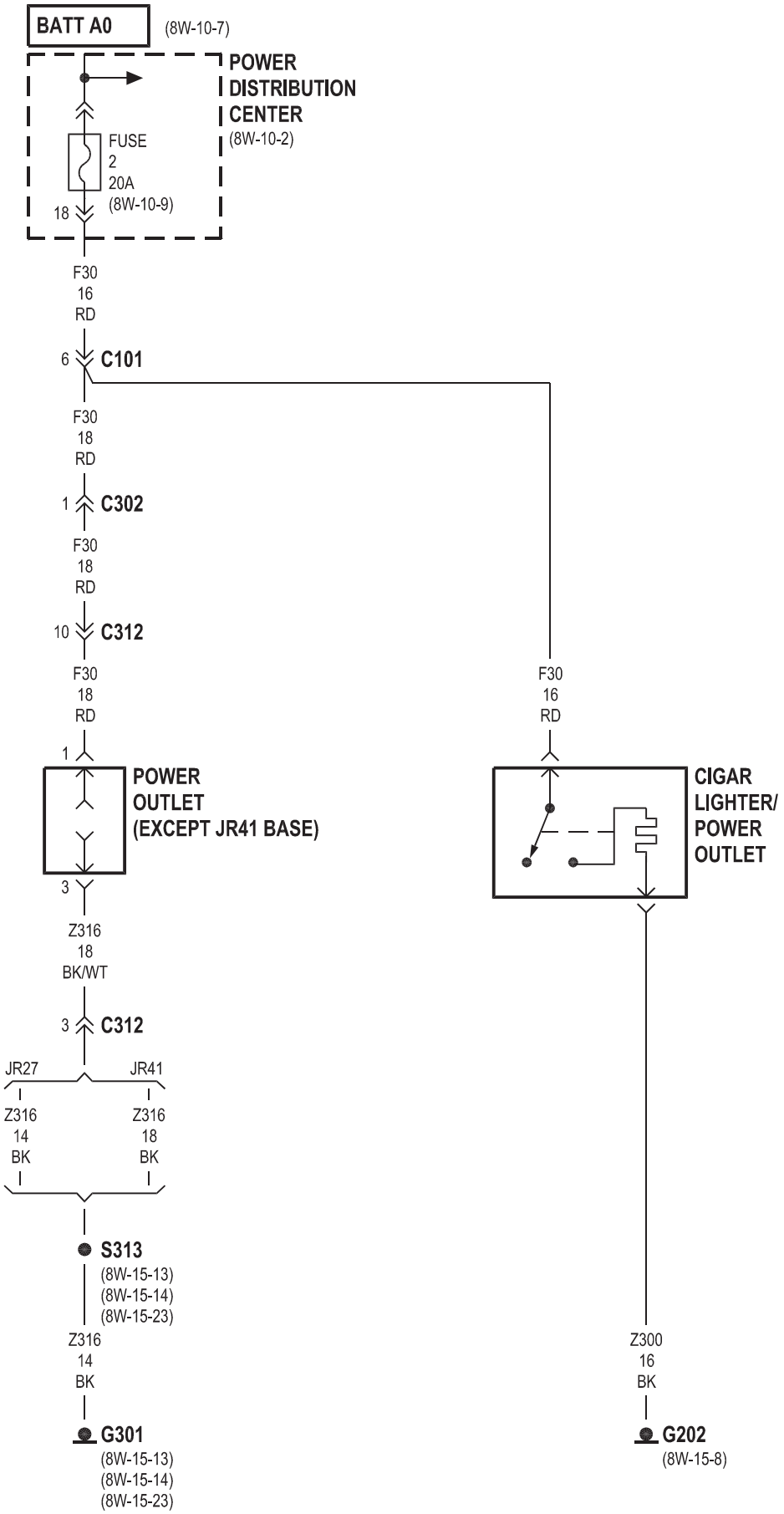
BATT A0
(8W-10-7)
POWER DISTRIBUTION CENTER
(8W-10-2)
FUSE 2 20A
(8W-10-9)
18
F30 16 RD
6
C101
F30 18 RD
1
C302
F30 18 RD
10
C312
F30 18 RD
1
POWER OUTLET (EXCEPT JR41 BASE)
3
Z316 18 BK/WT
3
C312
JR27
JR41
Z316 14 BK
Z316 18 BK
S313
(8W-15-13)
(8W-15-14)
(8W-15-23)
Z316 14 BK
G301
(8W-15-13)
(8W-15-14)
(8W-15-23)
F30 16 RD
CIGAR LIGHTER/ POWER OUTLET
Z300 16 BK
G202
(8W-15-8)

8W-42 AIR CONDITIONING-HEATER

Component	Page
A/C Compressor Clutch	8W-42-9, 10
A/C Compressor Clutch Relay	8W-42-9, 10
A/C Evaporator Temperature Sensor	8W-42-6
A/C Pressure Transducer	8W-42-9, 10
A/C-Heater Control	8W-42-2, 3, 6, 7
Automatic Temperature Control Head	8W-42-4
Blend Door Actuator	8W-42-6
Blower Motor	8W-42-3, 5
Blower Motor Power Module	8W-42-5
Blower Motor Resistor Block	8W-42-3
Body Control Module	8W-42-2, 3, 4, 5, 6, 7, 9, 10
Fuse 1	8W-42-3, 5
Fuse 4	8W-42-4
Fuse 5	8W-42-4
Fuse 6	8W-42-2
Fuse 11	8W-42-2
Fuse 12	8W-42-8, 9, 10, 11
Fuse 23	8W-42-8, 9, 10, 11
G108	8W-42-8, 11
G202	8W-42-3, 4
G203	8W-42-5
High Speed Radiator Fan Relay	8W-42-8, 11
Junction Block	8W-42-2, 3, 4, 5
Low Speed Radiator Fan Relay	8W-42-8, 11
Mode Door Actuator	8W-42-7
Power Distribution Center	8W-42-8, 9, 10, 11
Powertrain Control Module	8W-42-8, 9, 10, 11
Radiator Fan	8W-42-8, 11
Rear Window Defogger Relay	8W-42-2
Recirculation Door Actuator	8W-42-7
Sun Sensor	8W-42-5

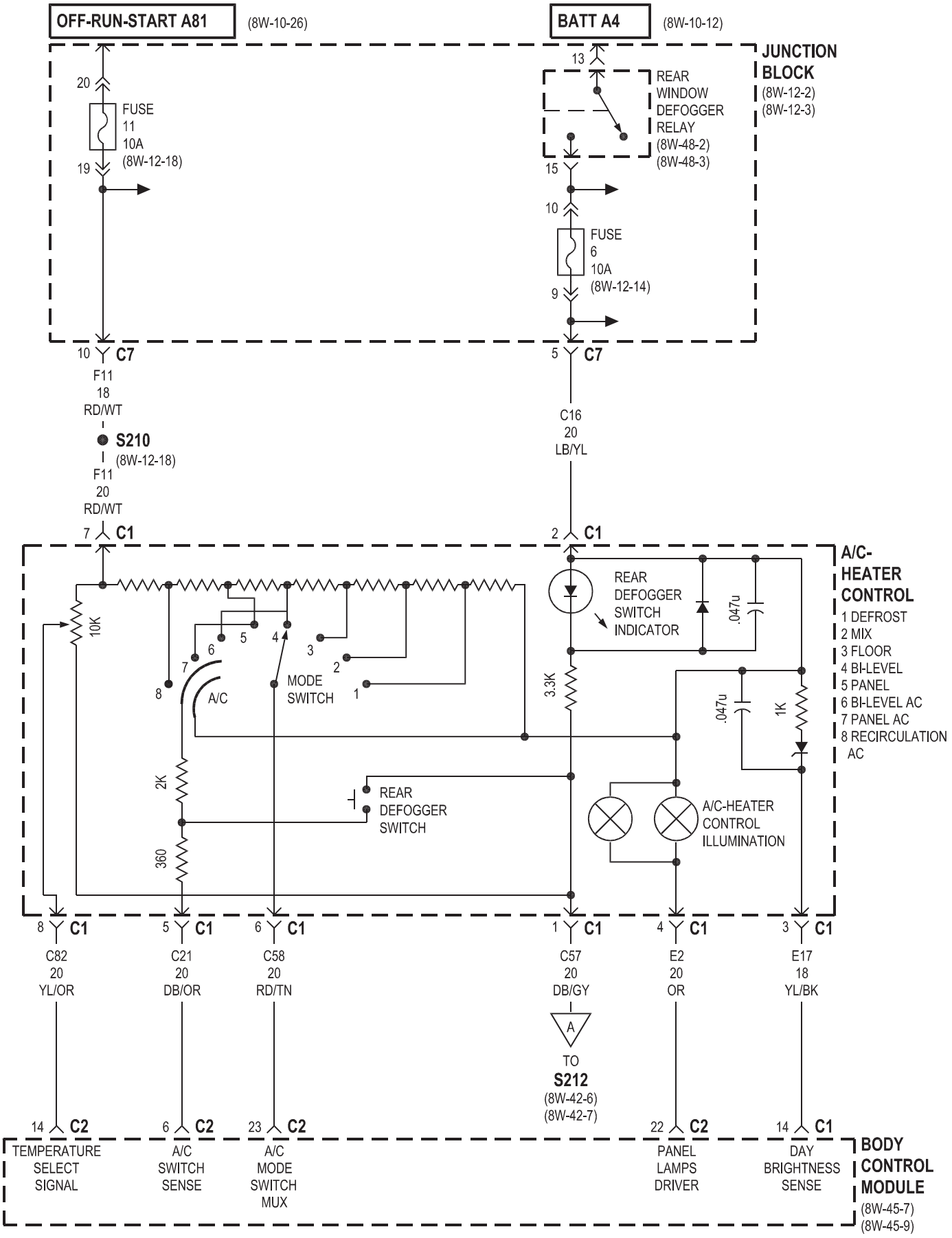
OFF-RUN-START A81
(8W-10-26)
BATT A4
(8W-10-12)
JUNCTION BLOCK
(8W-12-2)
(8W-12-3)
20
FUSE 11 10A
(8W-12-18)
19
13
REAR WINDOW DEFOGGER RELAY
(8W-48-2)
(8W-48-3)
15
10
FUSE 6 10A
(8W-12-14)
9
10 C7
F11 18 RD/WT
S210
(8W-12-18)
F11 20 RD/WT
7 C1
5 C7
C16 20 LB/YL
2 C1
A/C-HEATER CONTROL
1 DEFROST
2 MIX
3 FLOOR
4 BI-LEVEL
5 PANEL
6 BI-LEVEL AC
7 PANEL AC
8 RECIRCULATION AC
10K
2K
360
A/C
MODE SWITCH
REAR DEFOGGER SWITCH INDICATOR
.047u
3.3K
1K
REAR DEFOGGER SWITCH
A/C-HEATER CONTROL ILLUMINATION
8 C1
5 C1
6 C1
1 C1
4 C1
3 C1
C82 20 YL/OR
C21 20 DB/OR
C58 20 RD/TN
C57 20 DB/GY
E2 20 OR
E17 18 YL/BK
A
TO S212
(8W-42-6)
(8W-42-7)
14 C2
6 C2
23 C2
22 C2
14 C1
TEMPERATURE SELECT SIGNAL
A/C SWITCH SENSE
A/C MODE SWITCH MUX
PANEL LAMPS DRIVER
DAY BRIGHTNESS SENSE
BODY CONTROL MODULE
(8W-45-7)
(8W-45-9)

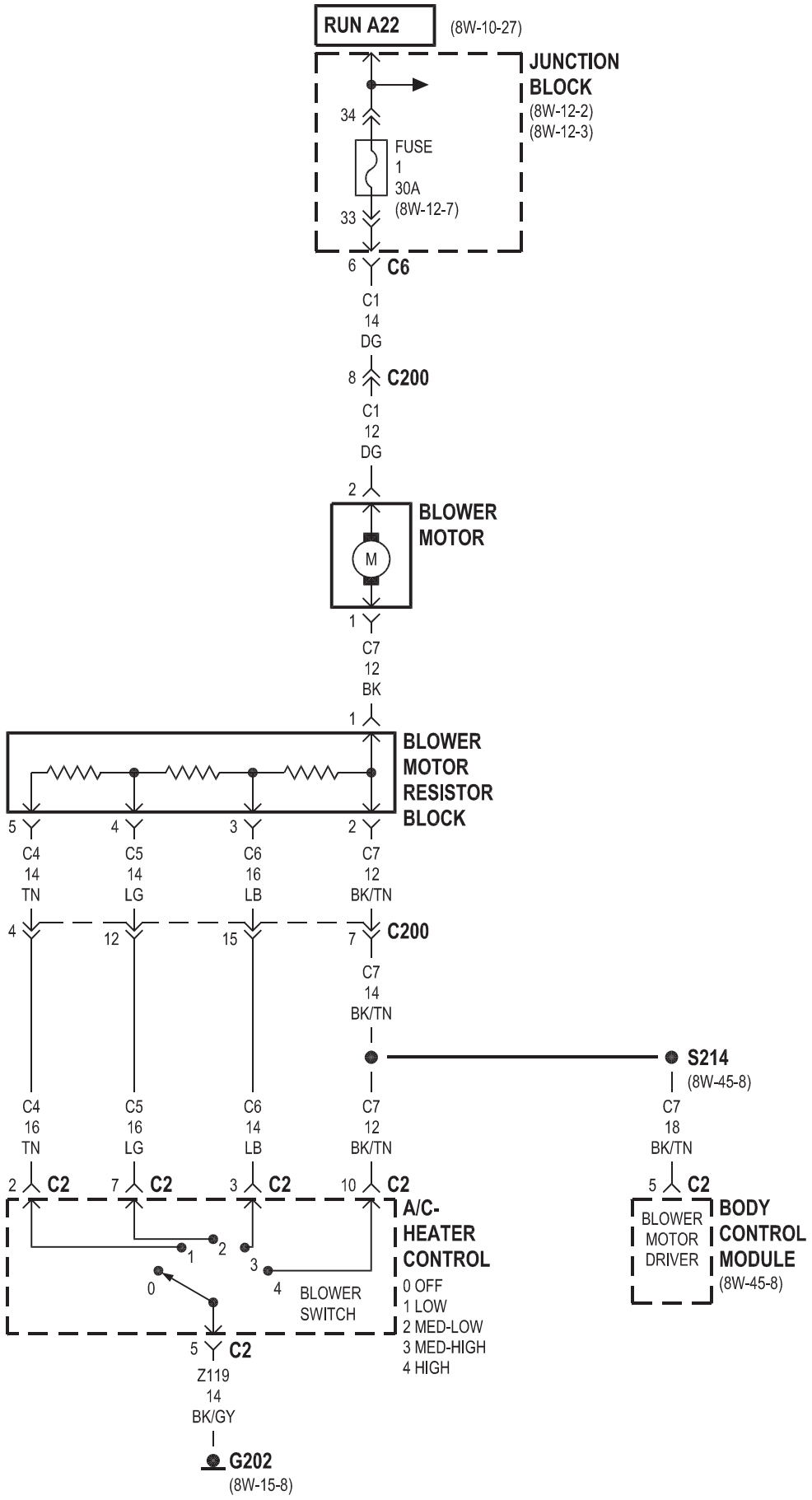
RUN A22
(8W-10-27)
JUNCTION BLOCK
(8W-12-2)
(8W-12-3)
34
FUSE
1
30A
(8W-12-7)
33
6
C6
C1
14
DG
8
C200
C1
12
DG
2
BLOWER MOTOR
M
1
C7
12
BK
1
BLOWER MOTOR RESISTOR BLOCK
5
4
3
2
C4
14
TN
C5
14
LG
C6
16
LB
C7
12
BK/TN
4
12
15
7
C200
C7
14
BK/TN
S214
(8W-45-8)
C7
18
BK/TN
C4
16
TN
C5
16
LG
C6
14
LB
C7
12
BK/TN
2
C2
7
C2
3
C2
10
C2
5
C2
A/C-HEATER CONTROL
0 OFF
1 LOW
2 MED-LOW
3 MED-HIGH
4 HIGH
BLOWER SWITCH
BLOWER MOTOR DRIVER
BODY CONTROL MODULE
(8W-45-8)
5
C2
Z119
14
BK/GY
G202
(8W-15-8)

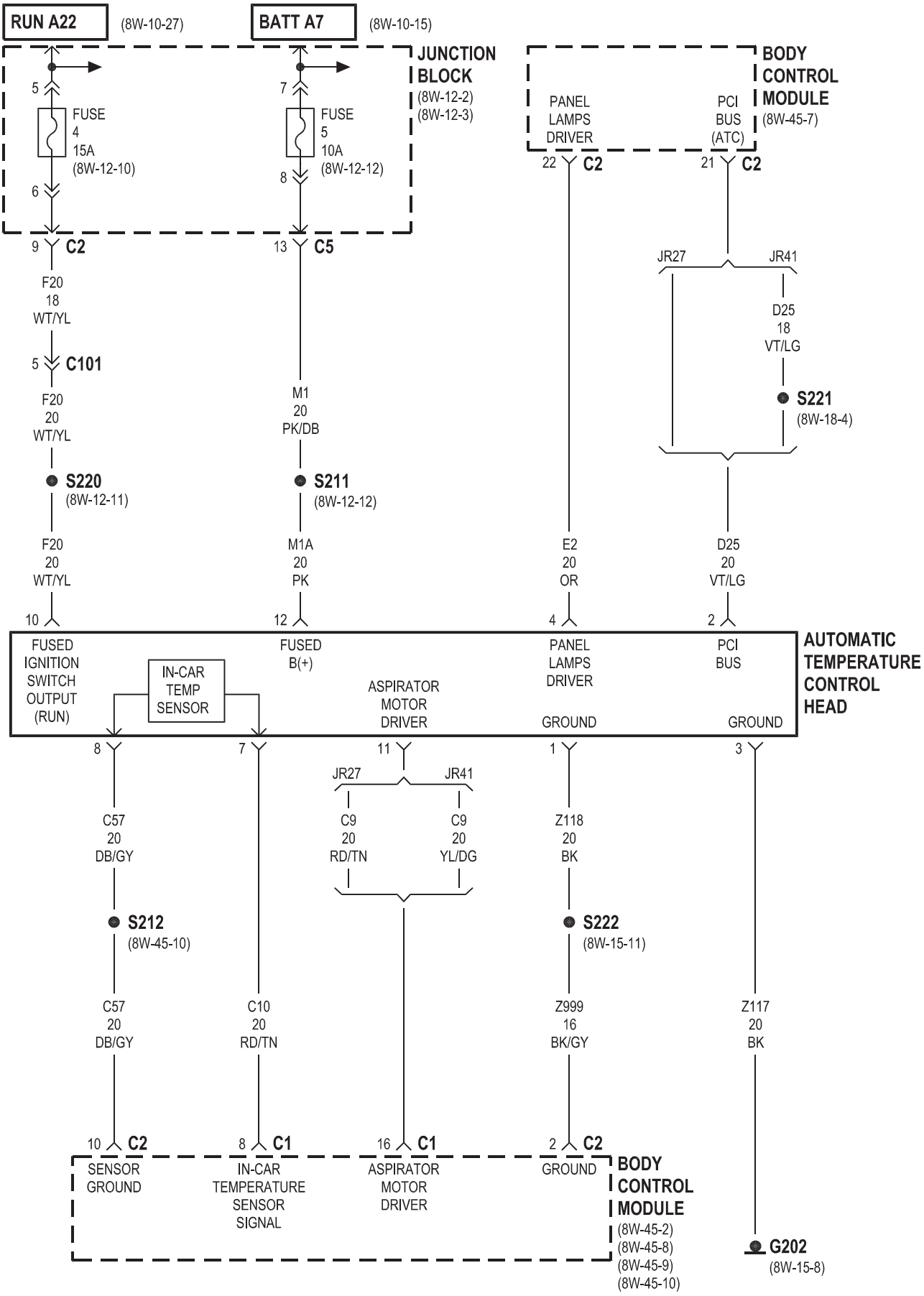
RUN A22
(8W-10-27)
BATT A7
(8W-10-15)
JUNCTION BLOCK
(8W-12-2)
(8W-12-3)
5
FUSE 4 15A (8W-12-10)
6
7
FUSE 5 10A (8W-12-12)
8
BODY CONTROL MODULE
(8W-45-7)
PANEL LAMPS DRIVER
PCI BUS (ATC)
22 C2
21 C2
9 C2
13 C5
JR27
JR41
F20 18 WT/YL
D25 18 VT/LG
5 C101
S221
(8W-18-4)
F20 20 WT/YL
M1 20 PK/DB
S220
(8W-12-11)
S211
(8W-12-12)
F20 20 WT/YL
M1A 20 PK
E2 20 OR
D25 20 VT/LG
10
12
4
2
AUTOMATIC TEMPERATURE CONTROL HEAD
FUSED IGNITION SWITCH OUTPUT (RUN)
IN-CAR TEMP SENSOR
FUSED B(+)
ASPIRATOR MOTOR DRIVER
PANEL LAMPS DRIVER
GROUND
PCI BUS
GROUND
8
7
11
1
3
JR27
JR41
C57 20 DB/GY
C9 20 RD/TN
C9 20 YL/DG
Z118 20 BK
S212
(8W-45-10)
S222
(8W-15-11)
C57 20 DB/GY
C10 20 RD/TN
Z999 16 BK/GY
Z117 20 BK
10 C2
8 C1
16 C1
2 C2
SENSOR GROUND
IN-CAR TEMPERATURE SENSOR SIGNAL
ASPIRATOR MOTOR DRIVER
GROUND
BODY CONTROL MODULE
(8W-45-2)
(8W-45-8)
(8W-45-9)
(8W-45-10)
G202
(8W-15-8)

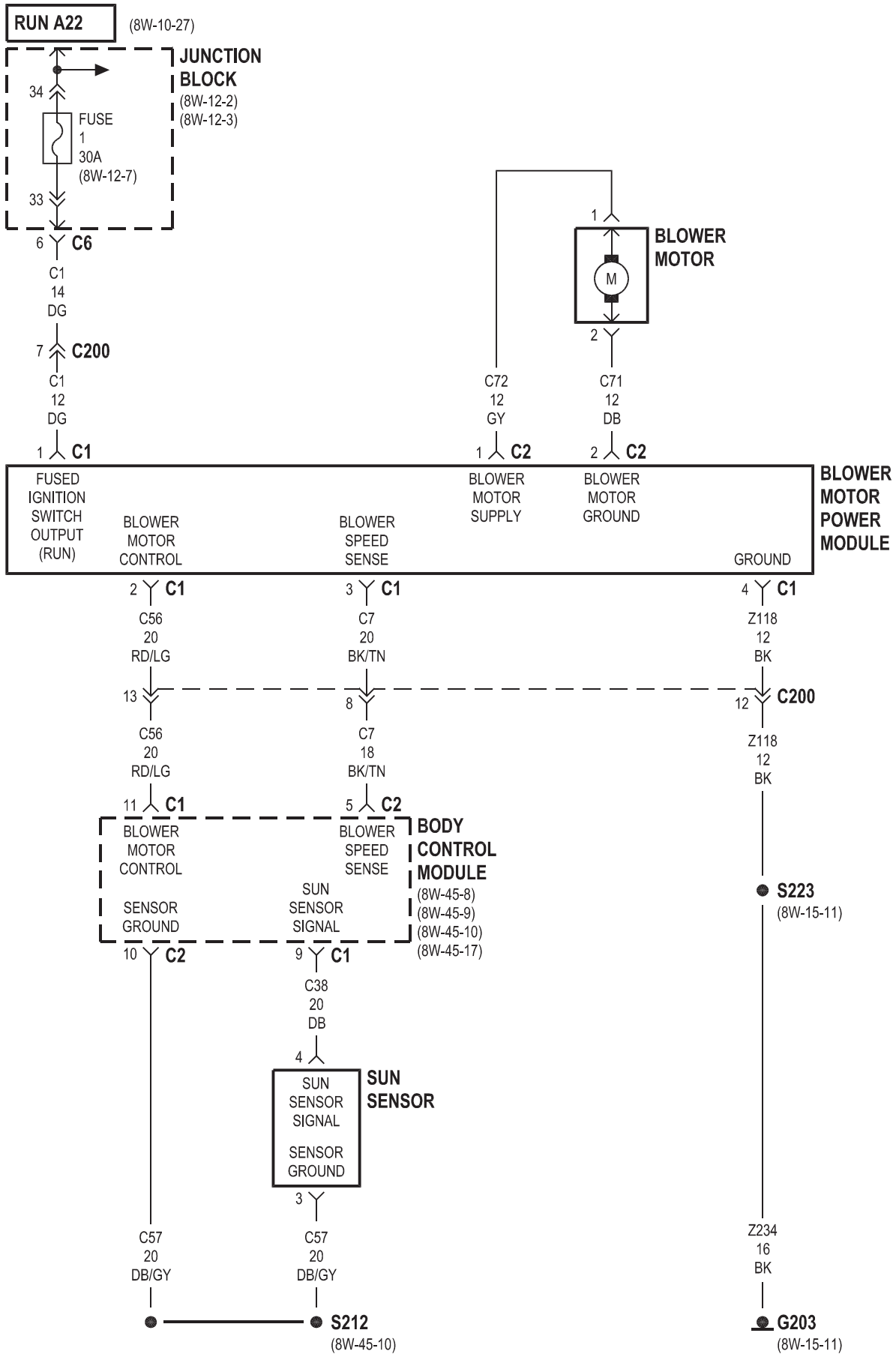
RUN A22
(8W-10-27)
JUNCTION BLOCK
(8W-12-2)
(8W-12-3)
34
FUSE 1 30A
(8W-12-7)
33
6
C6
C1 14 DG
7
C200
C1 12 DG
1
C1
1
BLOWER MOTOR
M
2
C72 12 GY
C71 12 DB
1
C2
2
C2
FUSED IGNITION SWITCH OUTPUT (RUN)
BLOWER MOTOR CONTROL
BLOWER SPEED SENSE
BLOWER MOTOR SUPPLY
BLOWER MOTOR GROUND
GROUND
BLOWER MOTOR POWER MODULE
2
C1
3
C1
4
C1
C56 20 RD/LG
C7 20 BK/TN
Z118 12 BK
13
8
12
C200
C56 20 RD/LG
C7 18 BK/TN
Z118 12 BK
11
C1
5
C2
BLOWER MOTOR CONTROL
BLOWER SPEED SENSE
SENSOR GROUND
SUN SENSOR SIGNAL
BODY CONTROL MODULE
(8W-45-8)
(8W-45-9)
(8W-45-10)
(8W-45-17)
S223
(8W-15-11)
10
C2
9
C1
C38 20 DB
4
SUN SENSOR SIGNAL
SENSOR GROUND
SUN SENSOR
3
C57 20 DB/GY
C57 20 DB/GY
Z234 16 BK
S212
(8W-45-10)
G203
(8W-15-11)

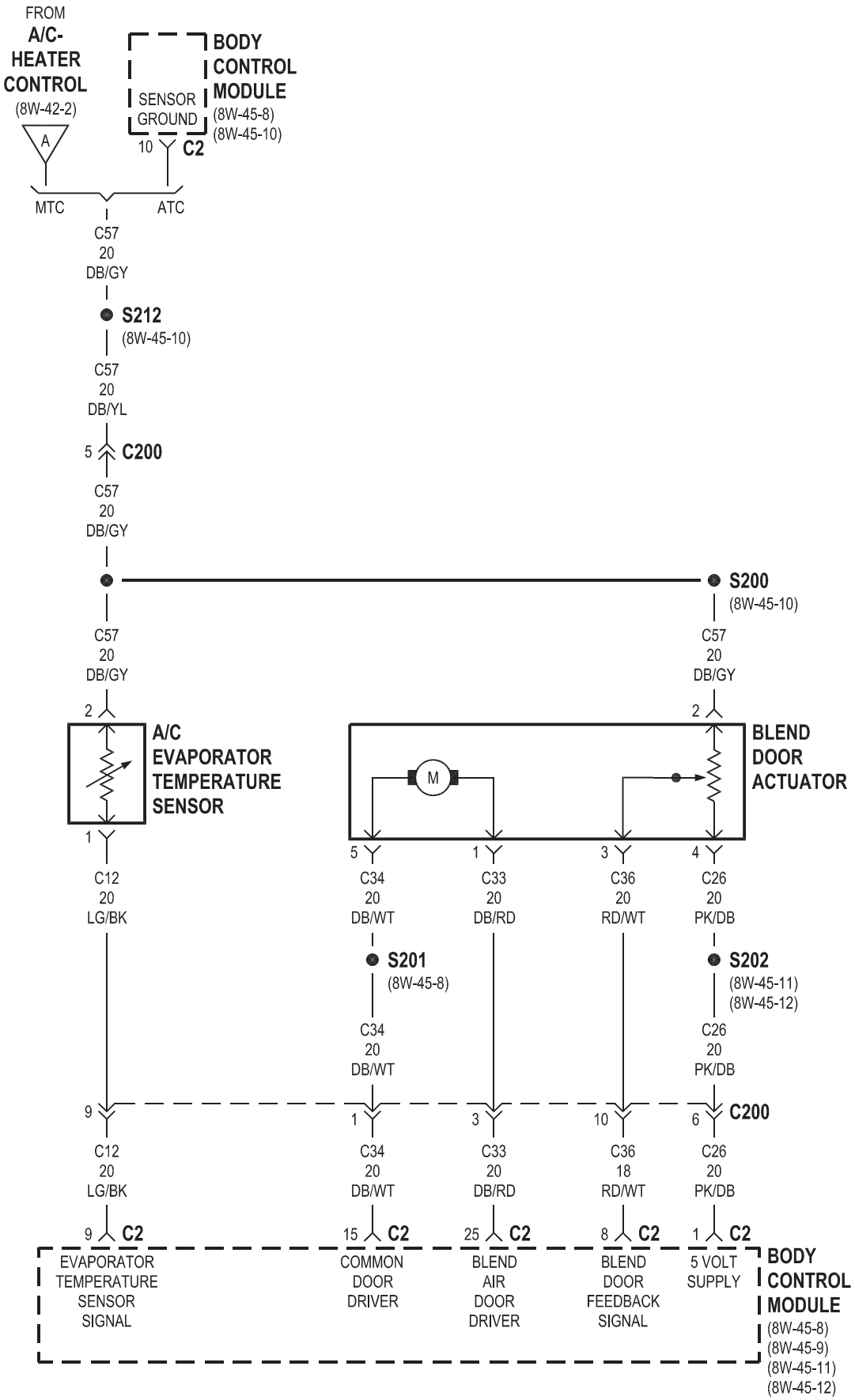
FROM
A/C-
HEATER
CONTROL
(8W-42-2)
A
MTC
ATC
BODY
CONTROL
MODULE
(8W-45-8)
(8W-45-10)
SENSOR
GROUND
10
C2
C57
20
DB/GY
S212
(8W-45-10)
C57
20
DB/YL
5
C200
C57
20
DB/GY
S200
(8W-45-10)
C57
20
DB/GY
C57
20
DB/GY
2
2
A/C
EVAPORATOR
TEMPERATURE
SENSOR
M
BLEND
DOOR
ACTUATOR
1
5
1
3
4
C12
20
LG/BK
C34
20
DB/WT
C33
20
DB/RD
C36
20
RD/WT
C26
20
PK/DB
S201
(8W-45-8)
S202
(8W-45-11)
(8W-45-12)
C34
20
DB/WT
C26
20
PK/DB
9
1
3
10
6
C200
C12
20
LG/BK
C34
20
DB/WT
C33
20
DB/RD
C36
18
RD/WT
C26
20
PK/DB
9
C2
15
C2
25
C2
8
C2
1
C2
EVAPORATOR
TEMPERATURE
SENSOR
SIGNAL
COMMON
DOOR
DRIVER
BLEND
AIR
DOOR
DRIVER
BLEND
DOOR
FEEDBACK
SIGNAL
5 VOLT
SUPPLY
BODY
CONTROL
MODULE
(8W-45-8)
(8W-45-9)
(8W-45-11)
(8W-45-12)

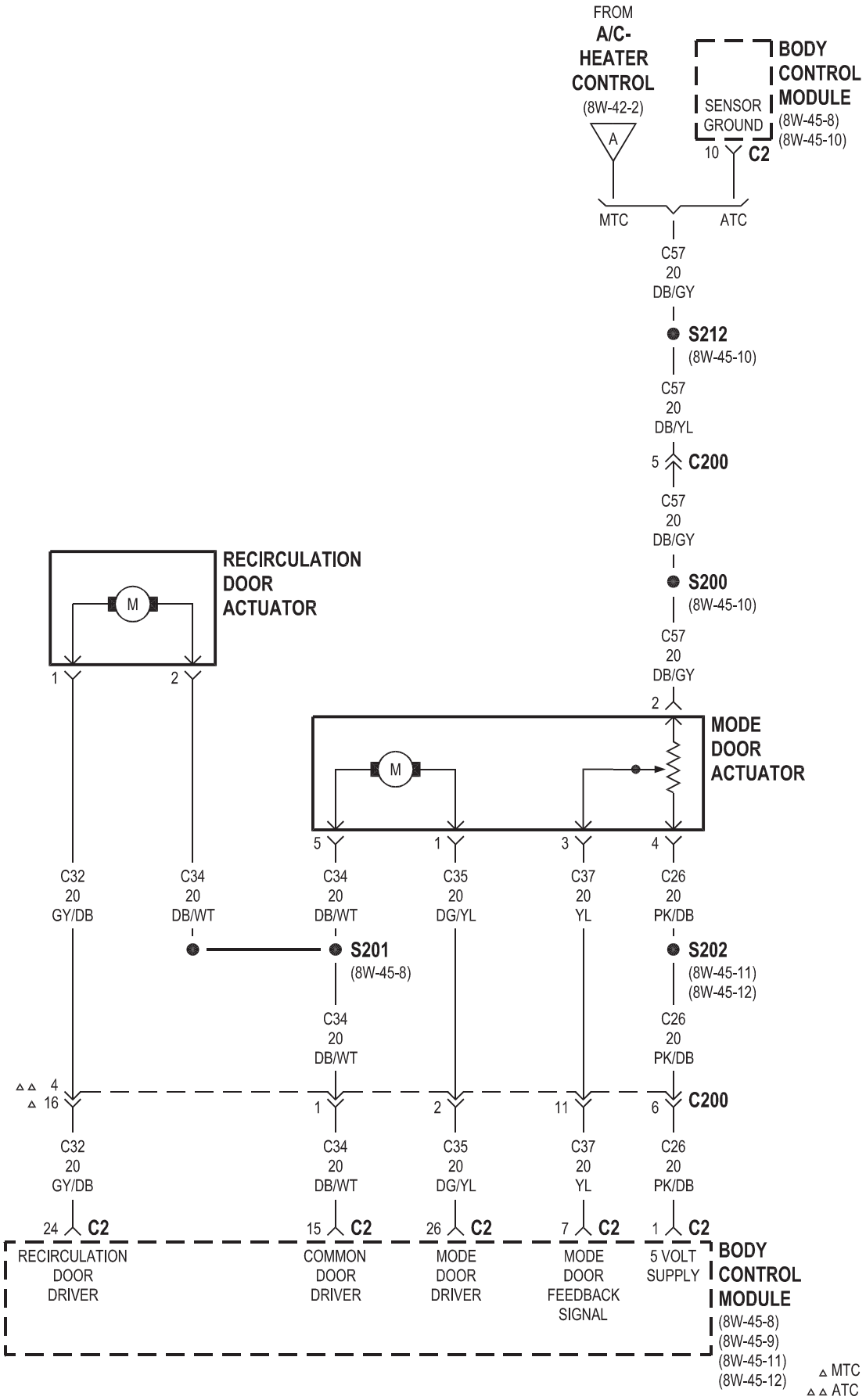
FROM
A/C-
HEATER
CONTROL
(8W-42-2)
A
BODY
CONTROL
MODULE
(8W-45-8)
(8W-45-10)
SENSOR
GROUND
10
C2
MTC
ATC
C57
20
DB/GY
S212
(8W-45-10)
C57
20
DB/YL
5
C200
C57
20
DB/GY
S200
(8W-45-10)
C57
20
DB/GY
2
RECIRCULATION
DOOR
ACTUATOR
M
1
2
MODE
DOOR
ACTUATOR
M
5
1
3
4
C32
20
GY/DB
C34
20
DB/WT
C34
20
DB/WT
C35
20
DG/YL
C37
20
YL
C26
20
PK/DB
S201
(8W-45-8)
S202
(8W-45-11)
(8W-45-12)
C34
20
DB/WT
C26
20
PK/DB
4
16
1
2
11
6
C200
C32
20
GY/DB
C34
20
DB/WT
C35
20
DG/YL
C37
20
YL
C26
20
PK/DB
24
C2
15
C2
26
C2
7
C2
1
C2
RECIRCULATION
DOOR
DRIVER
COMMON
DOOR
DRIVER
MODE
DOOR
DRIVER
MODE
DOOR
FEEDBACK
SIGNAL
5 VOLT
SUPPLY
BODY
CONTROL
MODULE
(8W-45-8)
(8W-45-9)
(8W-45-11)
(8W-45-12)
MTC
ATC

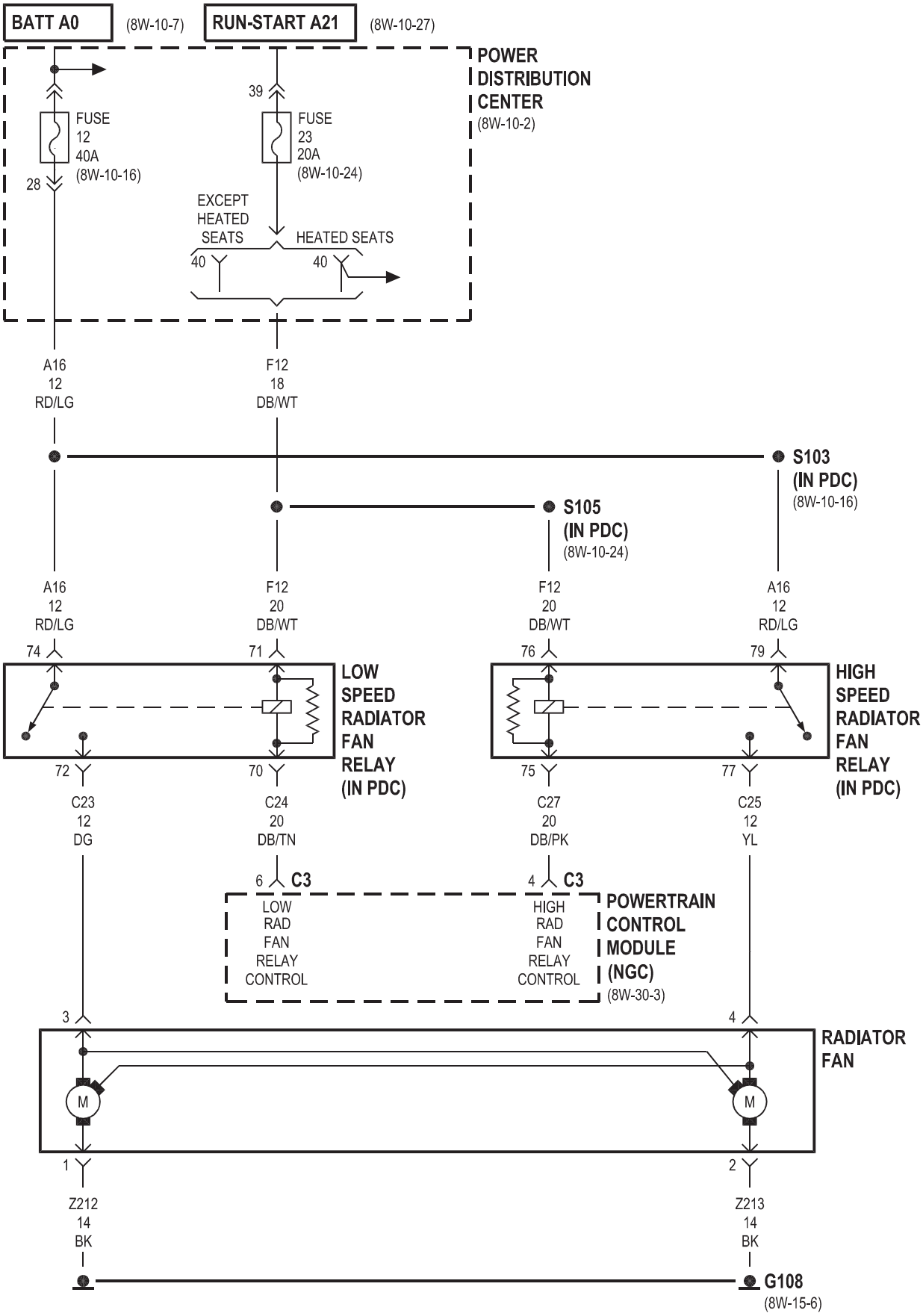
BATT A0
(8W-10-7)
RUN-START A21
(8W-10-27)
POWER DISTRIBUTION CENTER
(8W-10-2)
FUSE 12 40A (8W-10-16)
FUSE 23 20A (8W-10-24)
39
28
EXCEPT HEATED SEATS
HEATED SEATS
40
40
A16 12 RD/LG
F12 18 DB/WT
S103 (IN PDC)
(8W-10-16)
S105 (IN PDC)
(8W-10-24)
A16 12 RD/LG
F12 20 DB/WT
F12 20 DB/WT
A16 12 RD/LG
74
71
76
79
LOW SPEED RADIATOR FAN RELAY (IN PDC)
HIGH SPEED RADIATOR FAN RELAY (IN PDC)
72
70
75
77
C23 12 DG
C24 20 DB/TN
C27 20 DB/PK
C25 12 YL
6 C3
4 C3
LOW RAD FAN RELAY CONTROL
HIGH RAD FAN RELAY CONTROL
POWERTRAIN CONTROL MODULE (NGC)
(8W-30-3)
3
4
RADIATOR FAN
M
M
1
2
Z212 14 BK
Z213 14 BK
G108
(8W-15-6)

2.0L/2.4L

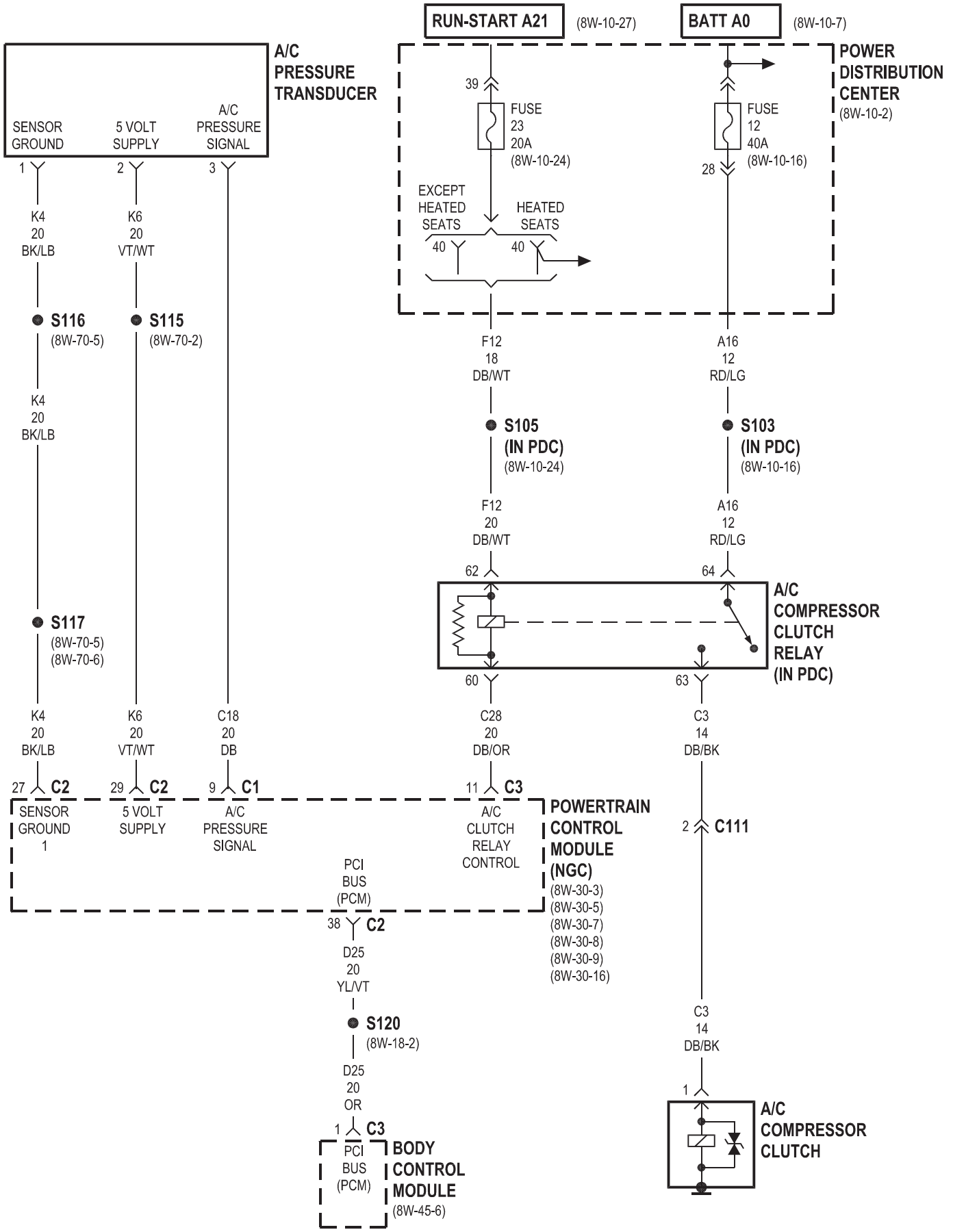
RUN-START A21
(8W-10-27)
BATT A0
(8W-10-7)
A/C PRESSURE TRANSDUCER
SENSOR GROUND
5 VOLT SUPPLY
A/C PRESSURE SIGNAL
1
2
3
POWER DISTRIBUTION CENTER
(8W-10-2)
39
FUSE 23 20A
(8W-10-24)
FUSE 12 40A
(8W-10-16)
28
EXCEPT HEATED SEATS
HEATED SEATS
40
40
K4 20 BK/LB
K6 20 VT/WT
S116
(8W-70-5)
S115
(8W-70-2)
F12 18 DB/WT
A16 12 RD/LG
S105 (IN PDC)
(8W-10-24)
S103 (IN PDC)
(8W-10-16)
K4 20 BK/LB
F12 20 DB/WT
A16 12 RD/LG
62
64
A/C COMPRESSOR CLUTCH RELAY (IN PDC)
S117
(8W-70-5)
(8W-70-6)
60
63
K4 20 BK/LB
K6 20 VT/WT
C18 20 DB
C28 20 DB/OR
C3 14 DB/BK
27 C2
29 C2
9 C1
11 C3
SENSOR GROUND 1
5 VOLT SUPPLY
A/C PRESSURE SIGNAL
A/C CLUTCH RELAY CONTROL
POWERTRAIN CONTROL MODULE (NGC)
(8W-30-3)
(8W-30-5)
(8W-30-7)
(8W-30-8)
(8W-30-9)
(8W-30-16)
2 C111
PCI BUS (PCM)
38 C2
D25 20 YL/VT
S120
(8W-18-2)
D25 20 OR
1 C3
PCI BUS (PCM)
BODY CONTROL MODULE
(8W-45-6)
C3 14 DB/BK
1
A/C COMPRESSOR CLUTCH

2.7L

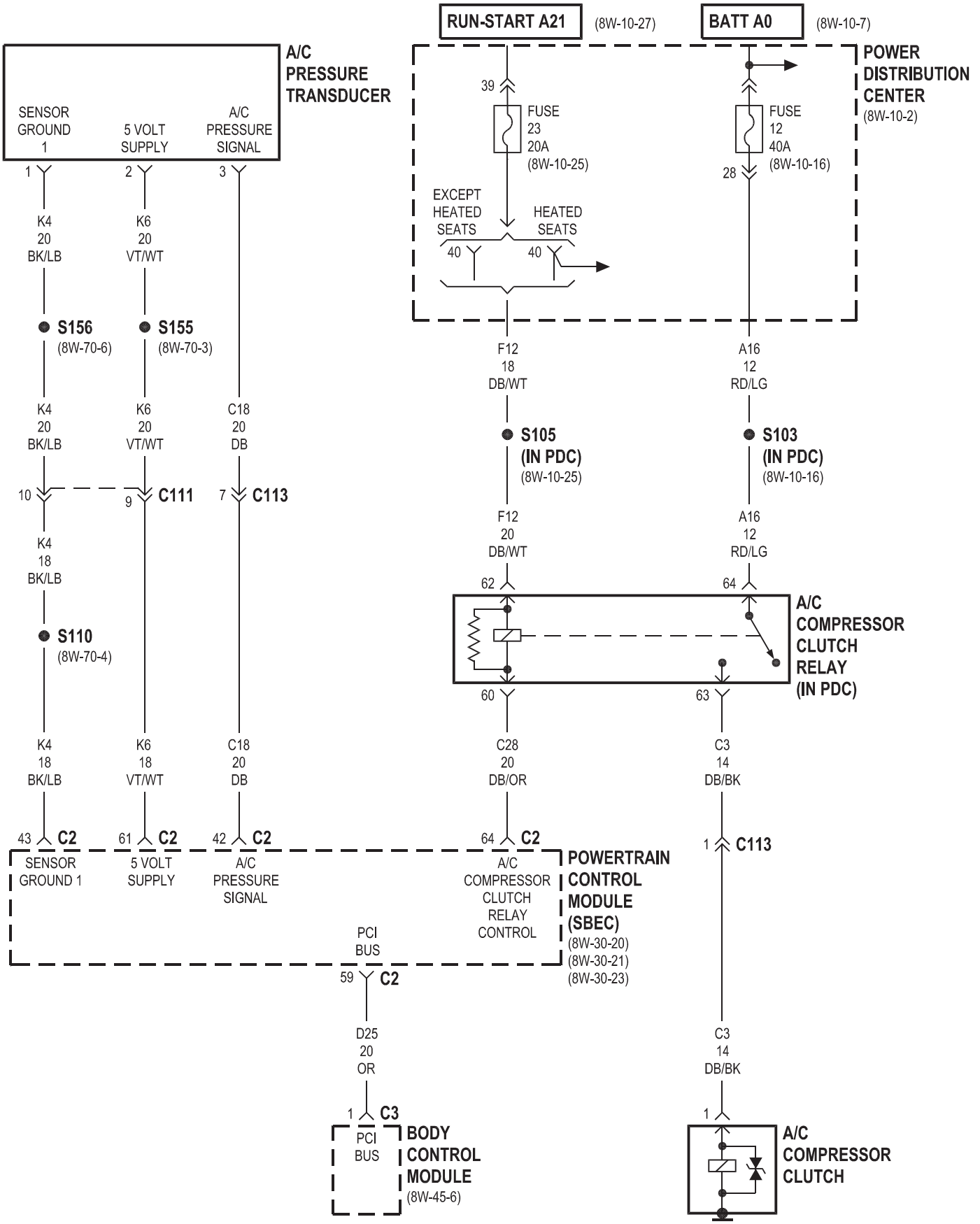
RUN-START A21
(8W-10-27)
BATT A0
(8W-10-7)
A/C PRESSURE TRANSDUCER
SENSOR GROUND 1
5 VOLT SUPPLY
A/C PRESSURE SIGNAL
POWER DISTRIBUTION CENTER
(8W-10-2)
FUSE 23 20A
(8W-10-25)
FUSE 12 40A
(8W-10-16)
EXCEPT HEATED SEATS
HEATED SEATS
K4 20 BK/LB
K6 20 VT/WT
S156
(8W-70-6)
S155
(8W-70-3)
F12 18 DB/WT
A16 12 RD/LG
C18 20 DB
S105 (IN PDC)
(8W-10-25)
S103 (IN PDC)
(8W-10-16)
C111
C113
K4 18 BK/LB
F12 20 DB/WT
A16 12 RD/LG
S110
(8W-70-4)
A/C COMPRESSOR CLUTCH RELAY (IN PDC)
K6 18 VT/WT
C28 20 DB/OR
C3 14 DB/BK
C2
SENSOR GROUND 1
5 VOLT SUPPLY
A/C PRESSURE SIGNAL
A/C COMPRESSOR CLUTCH RELAY CONTROL
POWERTRAIN CONTROL MODULE (SBEC)
(8W-30-20)
(8W-30-21)
(8W-30-23)
PCI BUS
D25 20 OR
C3
BODY CONTROL MODULE
(8W-45-6)
A/C COMPRESSOR CLUTCH

2.7L

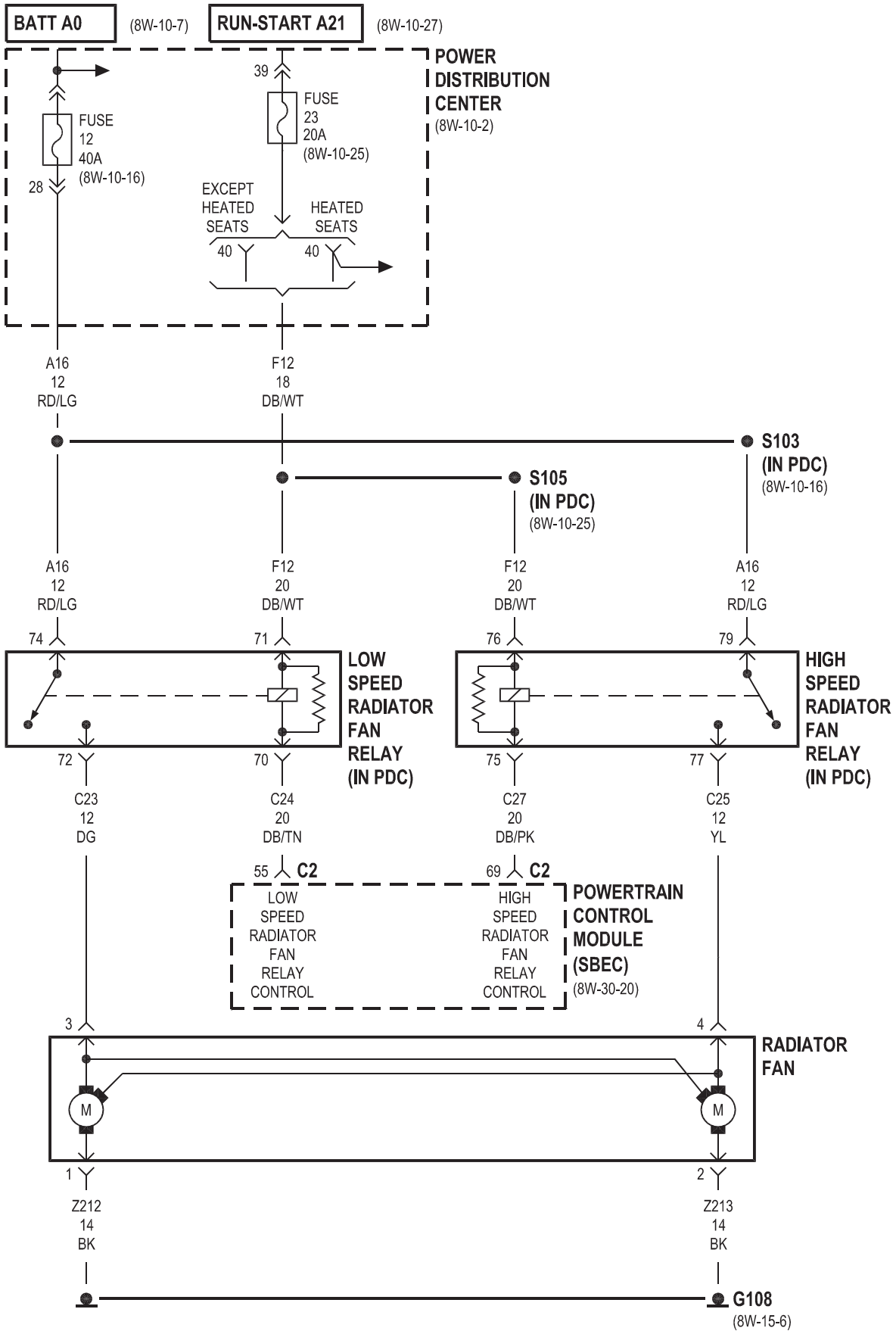
BATT A0
(8W-10-7)
RUN-START A21
(8W-10-27)
POWER DISTRIBUTION CENTER
(8W-10-2)
39
FUSE 23 20A
(8W-10-25)
FUSE 12 40A
(8W-10-16)
28
EXCEPT HEATED SEATS
HEATED SEATS
40
40
A16 12 RD/LG
F12 18 DB/WT
S103 (IN PDC)
(8W-10-16)
S105 (IN PDC)
(8W-10-25)
A16 12 RD/LG
F12 20 DB/WT
F12 20 DB/WT
A16 12 RD/LG
74
71
76
79
LOW SPEED RADIATOR FAN RELAY (IN PDC)
HIGH SPEED RADIATOR FAN RELAY (IN PDC)
72
70
75
77
C23 12 DG
C24 20 DB/TN
C27 20 DB/PK
C25 12 YL
55 C2
69 C2
LOW SPEED RADIATOR FAN RELAY CONTROL
HIGH SPEED RADIATOR FAN RELAY CONTROL
POWERTRAIN CONTROL MODULE (SBEC)
(8W-30-20)
3
4
RADIATOR FAN
M
M
1
2
Z212 14 BK
Z213 14 BK
G108
(8W-15-6)

8W-43 OCCUPANT RESTRAINT SYSTEM

Component	Page
Airbag Control Module	8W-43-2, 3, 4, 5, 6, 7, 8, 9
Body Control Module	8W-43-2, 6
Clockspring	8W-43-3, 7
Driver Airbag Squib 1	8W-43-3, 7
Driver Airbag Squib 2	8W-43-3, 7
Driver Door Lock Motor/Ajar Switch	8W-43-11
Driver Seat Belt Solenoid	8W-43-11
Driver Seat Belt Switch	8W-43-8
Driver Seat Belt Tensioner	8W-43-4, 5, 8
Fuse 15	8W-43-10
Fuse 16	8W-43-2, 6
Fuse 17	8W-43-2, 6
Fuse 19	8W-43-10
G201	8W-43-2, 6
G203	8W-43-5, 11
G301	8W-43-10, 11
G302	8W-43-8
Instrument Cluster	8W-43-2, 5, 6, 8
Junction Block	8W-43-2, 6, 10
Left Curtain Airbag Squib	8W-43-9
Left Side Impact Sensor 1	8W-43-9
Multi-Function Switch	8W-43-10
Passenger Airbag	8W-43-3, 7
Passenger Door Lock Motor/Ajar Switch	8W-43-5, 11
Passenger Seat Belt Solenoid	8W-43-11
Passenger Seat Belt Tensioner	8W-43-4, 5, 8
Power Distribution Center	8W-43-10
Right Curtain Airbag Squib	8W-43-9
Right Side Impact Sensor 1	8W-43-9
Seat Belt Control Module	8W-43-10, 11

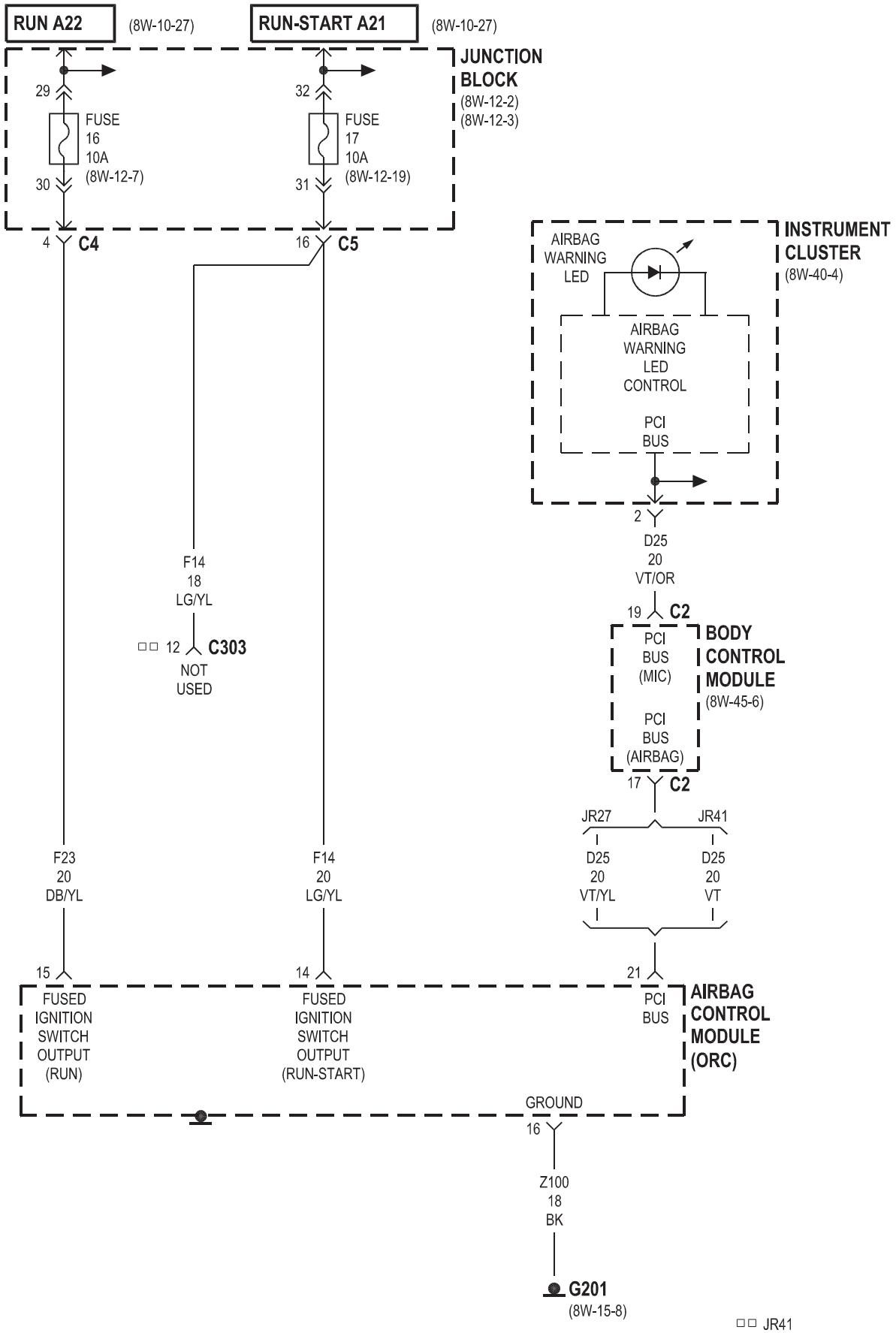
RUN A22
(8W-10-27)
RUN-START A21
(8W-10-27)
JUNCTION BLOCK
(8W-12-2)
(8W-12-3)
29
FUSE 16 10A
(8W-12-7)
30
32
FUSE 17 10A
(8W-12-19)
31
4
C4
16
C5
INSTRUMENT CLUSTER
(8W-40-4)
AIRBAG WARNING LED
AIRBAG WARNING LED CONTROL
PCI BUS
2
D25 20 VT/OR
19
C2
BODY CONTROL MODULE
(8W-45-6)
PCI BUS (MIC)
PCI BUS (AIRBAG)
17
C2
F14 18 LG/YL
12
C303
NOT USED
JR27
JR41
D25 20 VT/YL
D25 20 VT
F23 20 DB/YL
F14 20 LG/YL
15
14
21
FUSED IGNITION SWITCH OUTPUT (RUN)
FUSED IGNITION SWITCH OUTPUT (RUN-START)
PCI BUS
AIRBAG CONTROL MODULE (ORC)
GROUND
16
Z100 18 BK
G201
(8W-15-8)
JR41

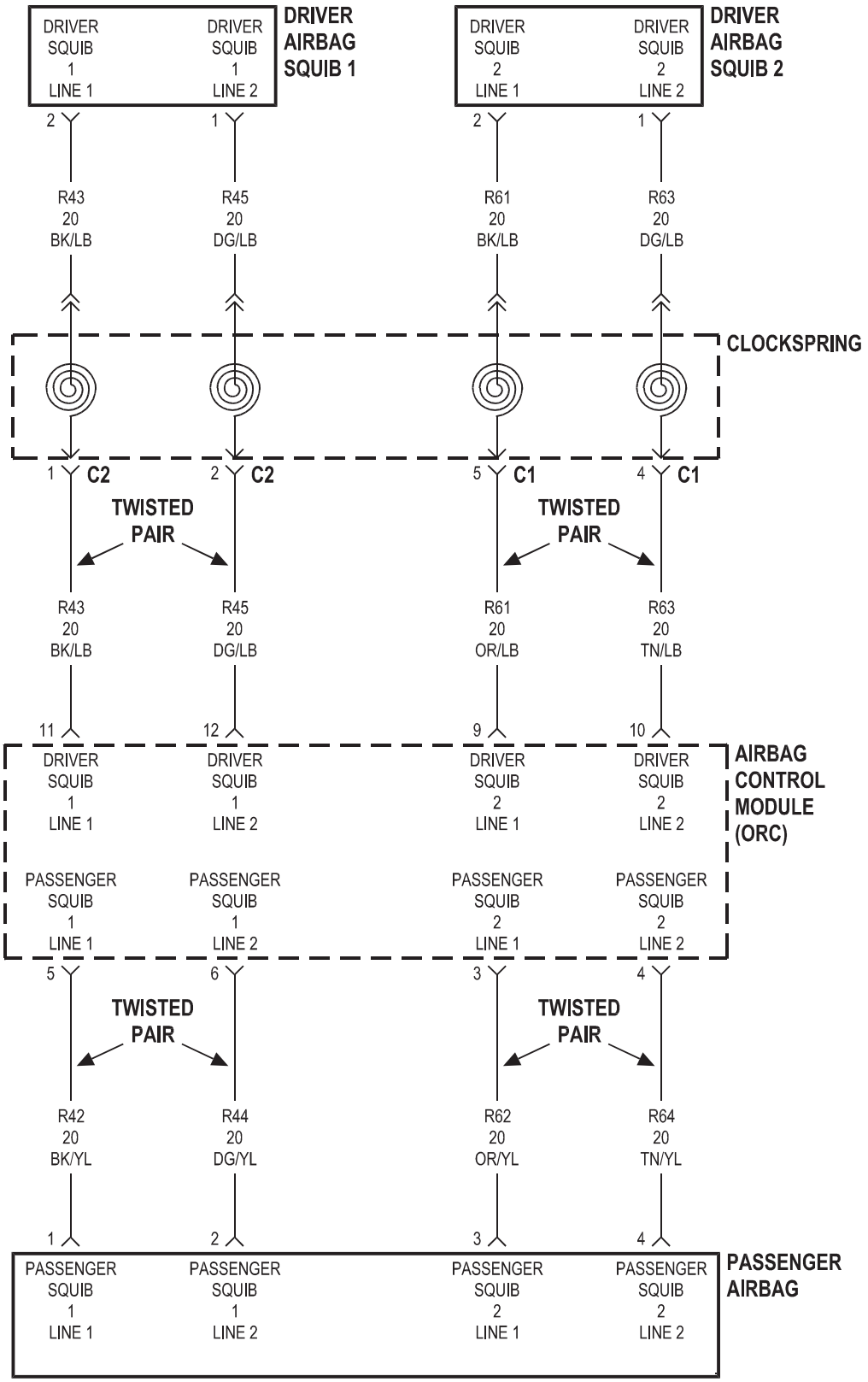
DRIVER SQUIB 1 LINE 1
DRIVER SQUIB 1 LINE 2
DRIVER AIRBAG SQUIB 1
DRIVER SQUIB 2 LINE 1
DRIVER SQUIB 2 LINE 2
DRIVER AIRBAG SQUIB 2
2
1
2
1
R43 20 BK/LB
R45 20 DG/LB
R61 20 BK/LB
R63 20 DG/LB
CLOCKSPRING
1 C2
2 C2
5 C1
4 C1
TWISTED PAIR
TWISTED PAIR
R43 20 BK/LB
R45 20 DG/LB
R61 20 OR/LB
R63 20 TN/LB
11
12
9
10
DRIVER SQUIB 1 LINE 1
DRIVER SQUIB 1 LINE 2
DRIVER SQUIB 2 LINE 1
DRIVER SQUIB 2 LINE 2
PASSENGER SQUIB 1 LINE 1
PASSENGER SQUIB 1 LINE 2
PASSENGER SQUIB 2 LINE 1
PASSENGER SQUIB 2 LINE 2
AIRBAG CONTROL MODULE (ORC)
5
6
3
4
TWISTED PAIR
TWISTED PAIR
R42 20 BK/YL
R44 20 DG/YL
R62 20 OR/YL
R64 20 TN/YL
1
2
3
4
PASSENGER SQUIB 1 LINE 1
PASSENGER SQUIB 1 LINE 2
PASSENGER SQUIB 2 LINE 1
PASSENGER SQUIB 2 LINE 2
PASSENGER AIRBAG

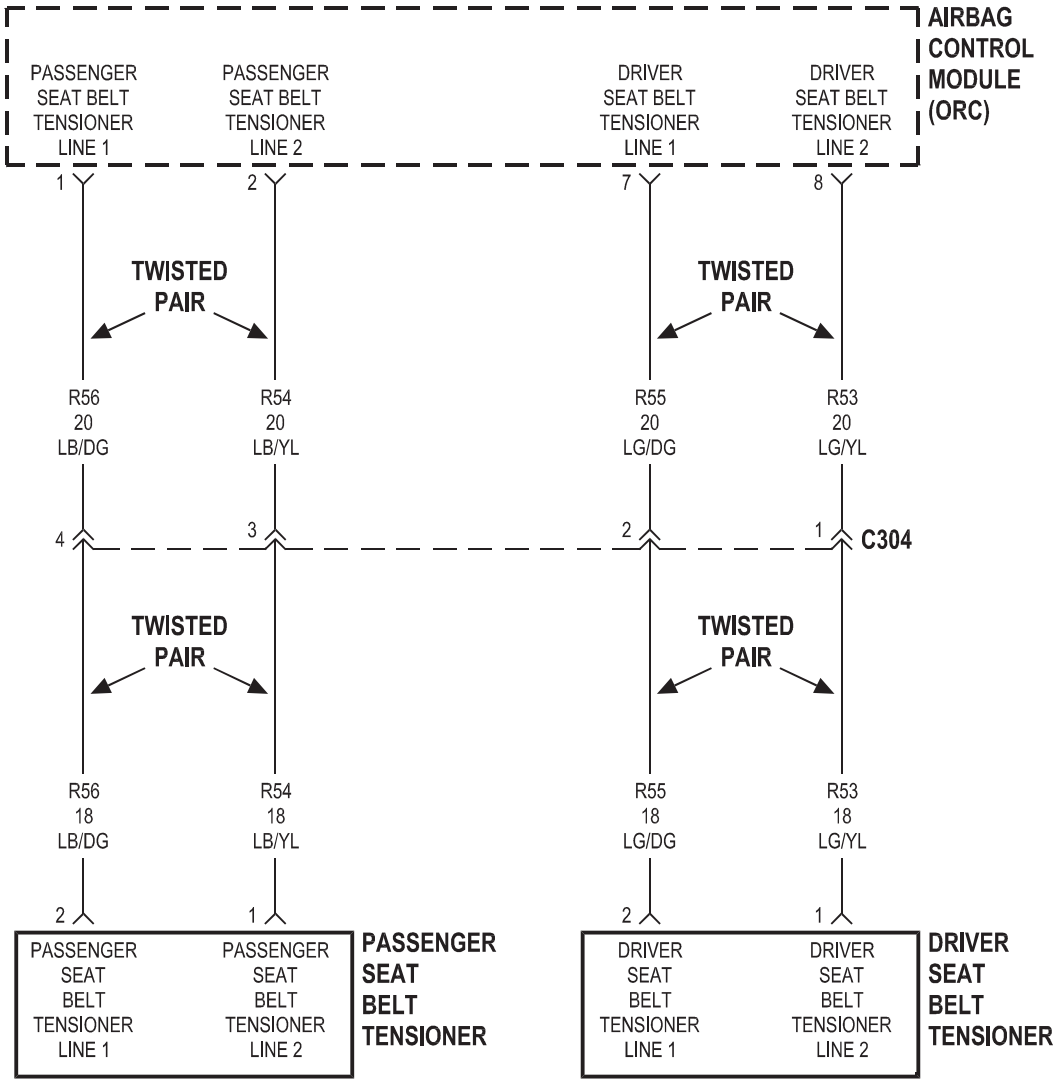
AIRBAG CONTROL MODULE (ORC)
PASSENGER SEAT BELT TENSIONER LINE 1
PASSENGER SEAT BELT TENSIONER LINE 2
DRIVER SEAT BELT TENSIONER LINE 1
DRIVER SEAT BELT TENSIONER LINE 2
1
2
7
8
TWISTED PAIR
TWISTED PAIR
R56 20 LB/DG
R54 20 LB/YL
R55 20 LG/DG
R53 20 LG/YL
4
3
2
1
C304
TWISTED PAIR
TWISTED PAIR
R56 18 LB/DG
R54 18 LB/YL
R55 18 LG/DG
R53 18 LG/YL
2
1
2
1
PASSENGER SEAT BELT TENSIONER LINE 1
PASSENGER SEAT BELT TENSIONER LINE 2
PASSENGER SEAT BELT TENSIONER
DRIVER SEAT BELT TENSIONER LINE 1
DRIVER SEAT BELT TENSIONER LINE 2
DRIVER SEAT BELT TENSIONER

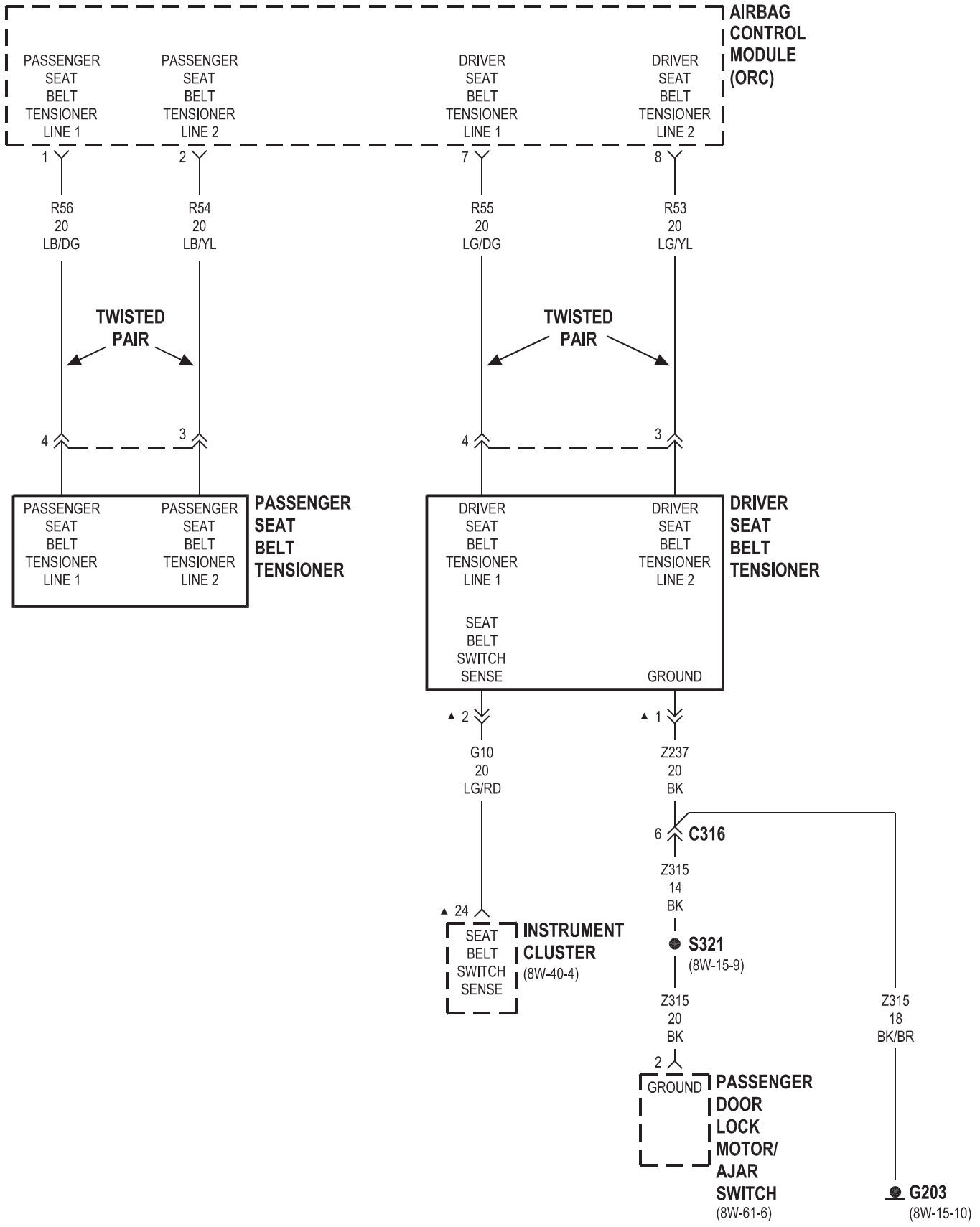

▲ EXCEPT EXPORT

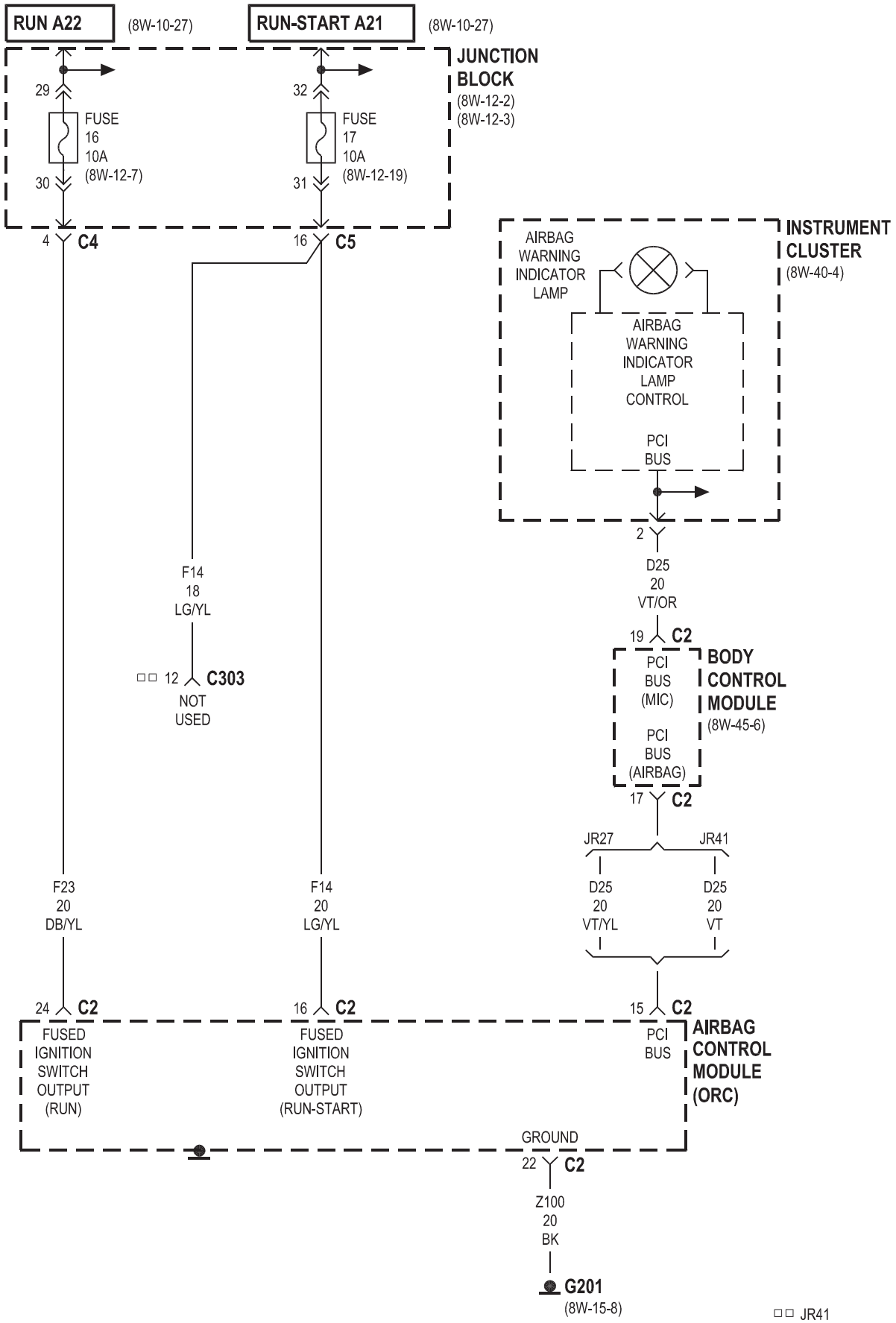
RUN A22
(8W-10-27)
RUN-START A21
(8W-10-27)
JUNCTION BLOCK
(8W-12-2)
(8W-12-3)
29
FUSE 16 10A
(8W-12-7)
30
32
FUSE 17 10A
(8W-12-19)
31
4 C4
16 C5
INSTRUMENT CLUSTER
(8W-40-4)
AIRBAG WARNING INDICATOR LAMP
AIRBAG WARNING INDICATOR LAMP CONTROL
PCI BUS
2
D25 20 VT/OR
19 C2
BODY CONTROL MODULE
(8W-45-6)
PCI BUS (MIC)
PCI BUS (AIRBAG)
17 C2
F14 18 LG/YL
12 C303
NOT USED
JR27
JR41
D25 20 VT/YL
D25 20 VT
F23 20 DB/YL
F14 20 LG/YL
24 C2
16 C2
15 C2
FUSED IGNITION SWITCH OUTPUT (RUN)
FUSED IGNITION SWITCH OUTPUT (RUN-START)
PCI BUS
AIRBAG CONTROL MODULE (ORC)
GROUND
22 C2
Z100 20 BK
G201
(8W-15-8)
JR41

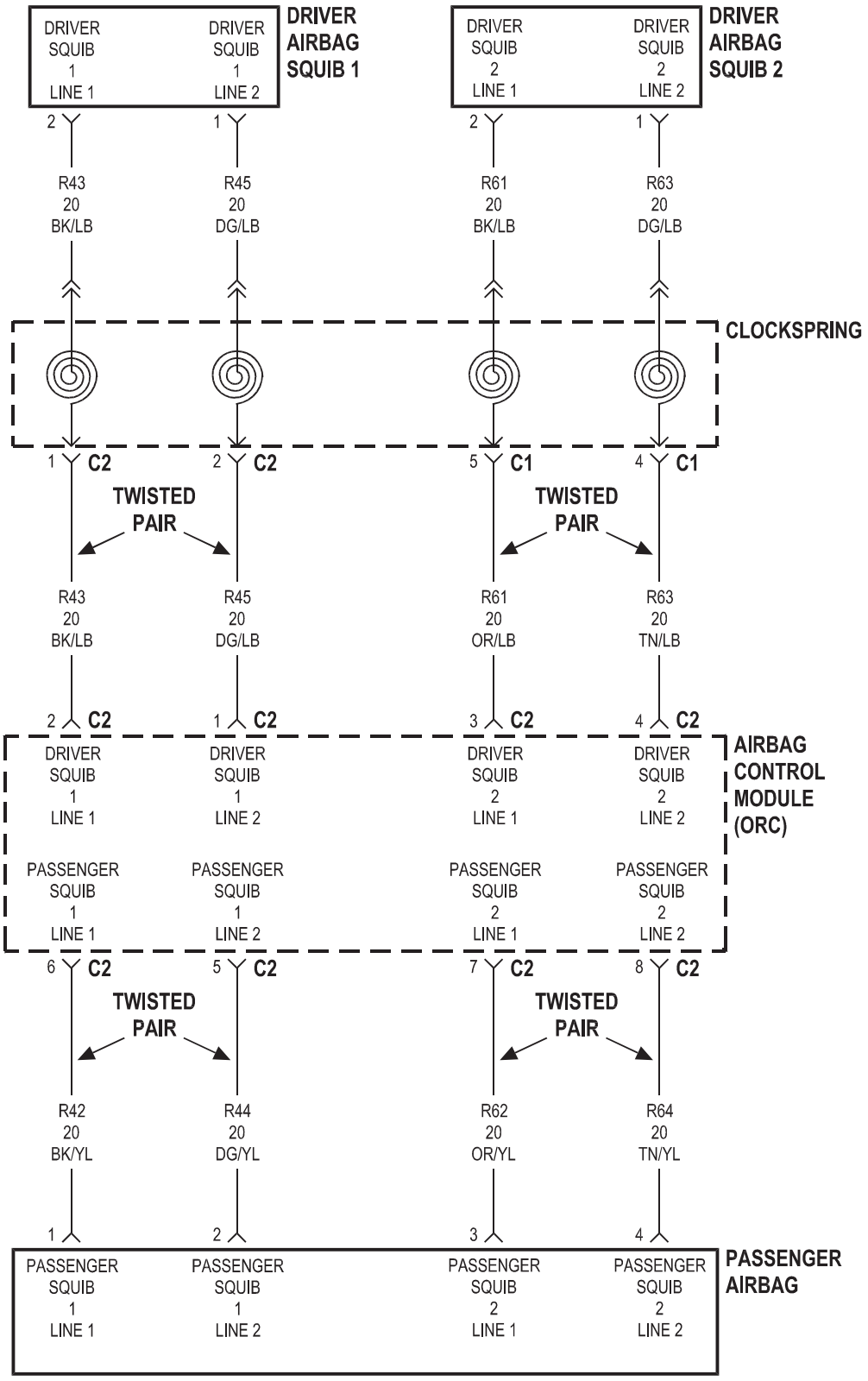
DRIVER AIRBAG SQUIB 1
DRIVER SQUIB 1 LINE 1
DRIVER SQUIB 1 LINE 2
DRIVER AIRBAG SQUIB 2
DRIVER SQUIB 2 LINE 1
DRIVER SQUIB 2 LINE 2
2
1
2
1
R43 20 BK/LB
R45 20 DG/LB
R61 20 BK/LB
R63 20 DG/LB
CLOCKSPRING
1 C2
2 C2
5 C1
4 C1
TWISTED PAIR
TWISTED PAIR
R43 20 BK/LB
R45 20 DG/LB
R61 20 OR/LB
R63 20 TN/LB
2 C2
1 C2
3 C2
4 C2
AIRBAG CONTROL MODULE (ORC)
DRIVER SQUIB 1 LINE 1
DRIVER SQUIB 1 LINE 2
DRIVER SQUIB 2 LINE 1
DRIVER SQUIB 2 LINE 2
PASSENGER SQUIB 1 LINE 1
PASSENGER SQUIB 1 LINE 2
PASSENGER SQUIB 2 LINE 1
PASSENGER SQUIB 2 LINE 2
6 C2
5 C2
7 C2
8 C2
TWISTED PAIR
TWISTED PAIR
R42 20 BK/YL
R44 20 DG/YL
R62 20 OR/YL
R64 20 TN/YL
1
2
3
4
PASSENGER AIRBAG
PASSENGER SQUIB 1 LINE 1
PASSENGER SQUIB 1 LINE 2
PASSENGER SQUIB 2 LINE 1
PASSENGER SQUIB 2 LINE 2

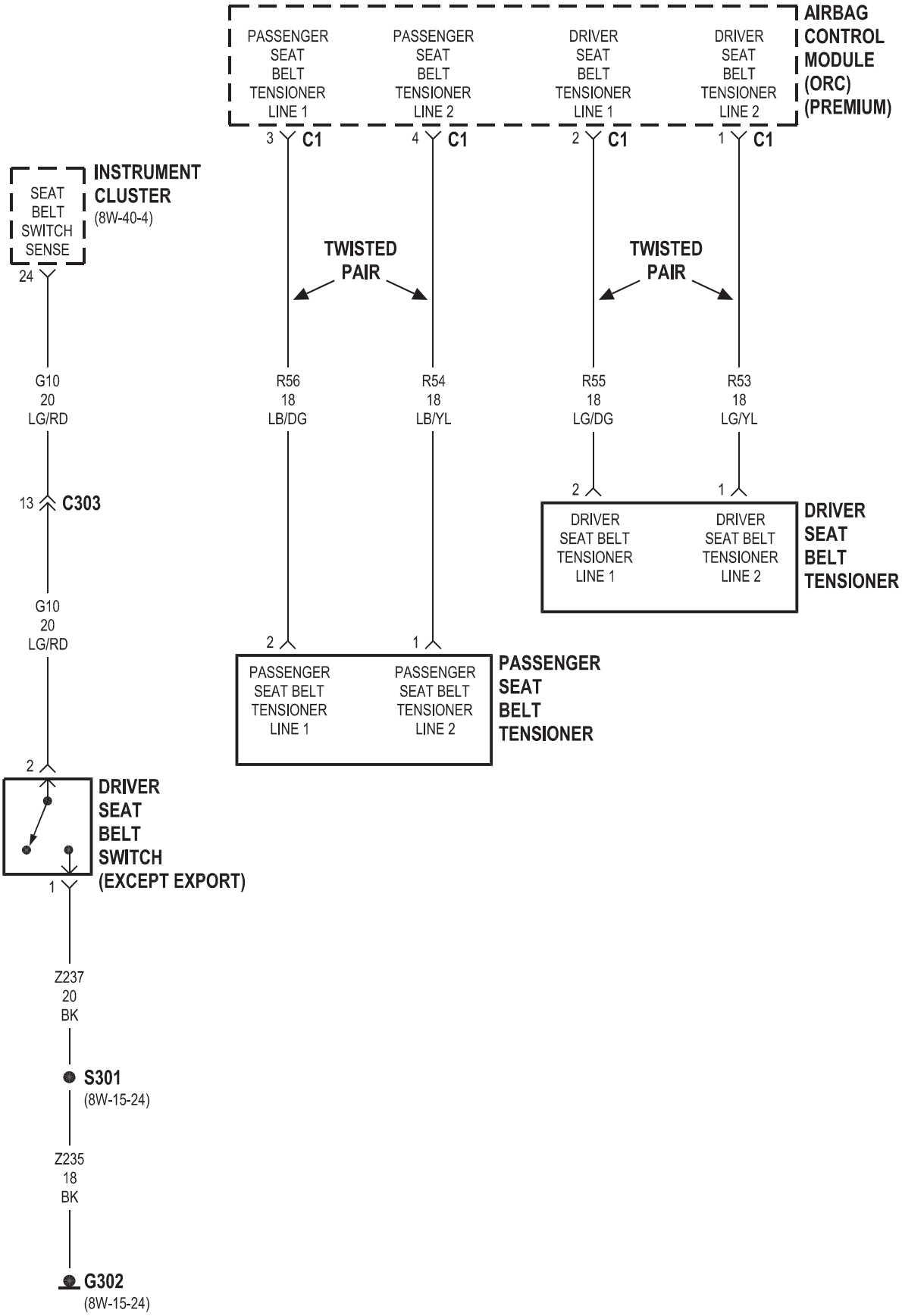
AIRBAG CONTROL MODULE (ORC) (PREMIUM)
PASSENGER SEAT BELT TENSIONER LINE 1
PASSENGER SEAT BELT TENSIONER LINE 2
DRIVER SEAT BELT TENSIONER LINE 1
DRIVER SEAT BELT TENSIONER LINE 2
3 C1
4 C1
2 C1
1 C1
INSTRUMENT CLUSTER (8W-40-4)
SEAT BELT SWITCH SENSE
24
TWISTED PAIR
TWISTED PAIR
G10 20 LG/RD
R56 18 LB/DG
R54 18 LB/YL
R55 18 LG/DG
R53 18 LG/YL
13 C303
G10 20 LG/RD
DRIVER SEAT BELT TENSIONER
PASSENGER SEAT BELT TENSIONER
DRIVER SEAT BELT SWITCH (EXCEPT EXPORT)
Z237 20 BK
S301 (8W-15-24)
Z235 18 BK
G302 (8W-15-24)

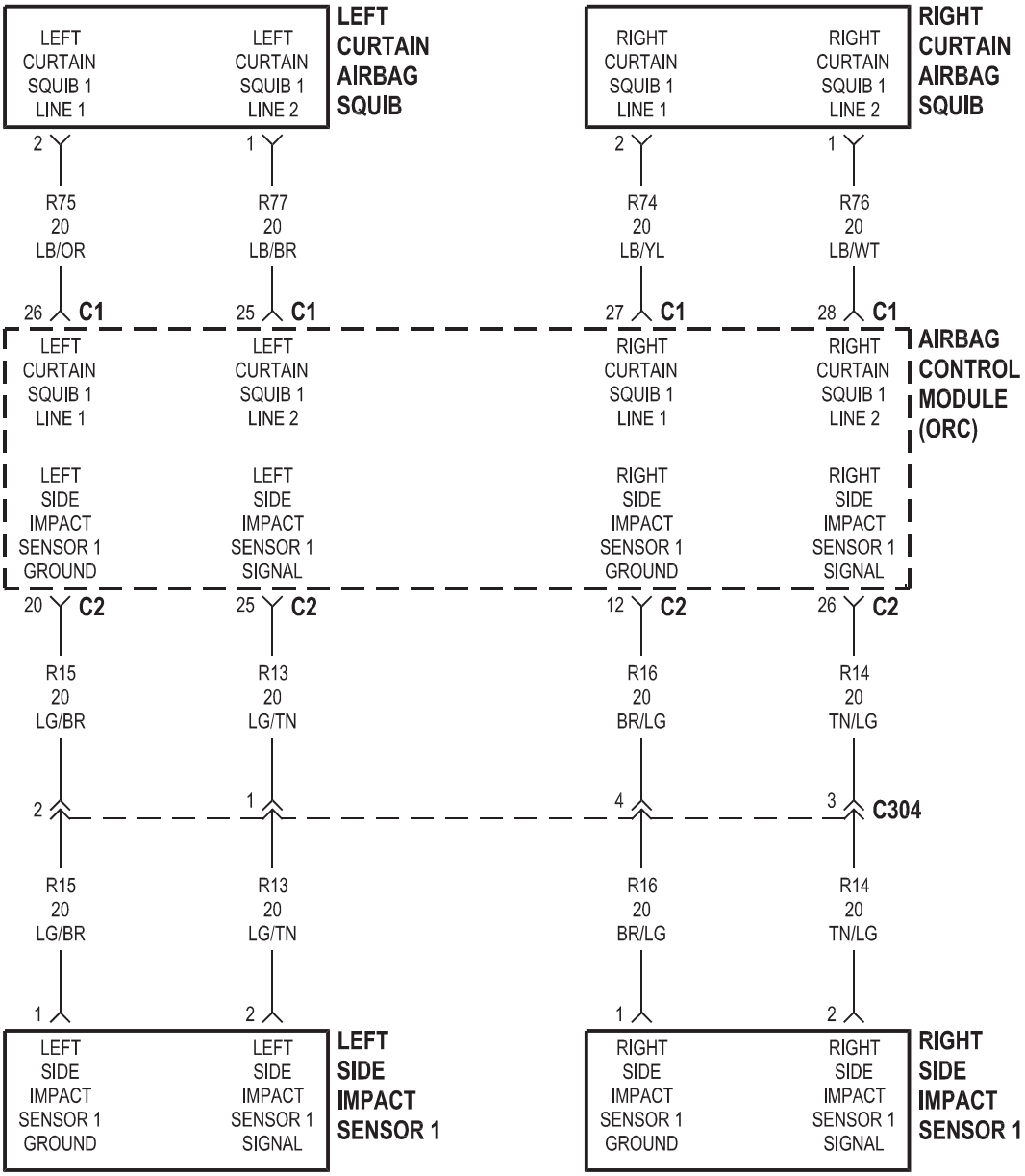
LEFT CURTAIN SQUIB 1 LINE 1
LEFT CURTAIN SQUIB 1 LINE 2
LEFT CURTAIN AIRBAG SQUIB
RIGHT CURTAIN SQUIB 1 LINE 1
RIGHT CURTAIN SQUIB 1 LINE 2
RIGHT CURTAIN AIRBAG SQUIB
2
1
2
1
R75 20 LB/OR
R77 20 LB/BR
R74 20 LB/YL
R76 20 LB/WT
26 C1
25 C1
27 C1
28 C1
LEFT CURTAIN SQUIB 1 LINE 1
LEFT CURTAIN SQUIB 1 LINE 2
RIGHT CURTAIN SQUIB 1 LINE 1
RIGHT CURTAIN SQUIB 1 LINE 2
AIRBAG CONTROL MODULE (ORC)
LEFT SIDE IMPACT SENSOR 1 GROUND
LEFT SIDE IMPACT SENSOR 1 SIGNAL
RIGHT SIDE IMPACT SENSOR 1 GROUND
RIGHT SIDE IMPACT SENSOR 1 SIGNAL
20 C2
25 C2
12 C2
26 C2
R15 20 LG/BR
R13 20 LG/TN
R16 20 BR/LG
R14 20 TN/LG
2
1
4
3
C304
R15 20 LG/BR
R13 20 LG/TN
R16 20 BR/LG
R14 20 TN/LG
1
2
1
2
LEFT SIDE IMPACT SENSOR 1 GROUND
LEFT SIDE IMPACT SENSOR 1 SIGNAL
LEFT SIDE IMPACT SENSOR 1
RIGHT SIDE IMPACT SENSOR 1 GROUND
RIGHT SIDE IMPACT SENSOR 1 SIGNAL
RIGHT SIDE IMPACT SENSOR 1

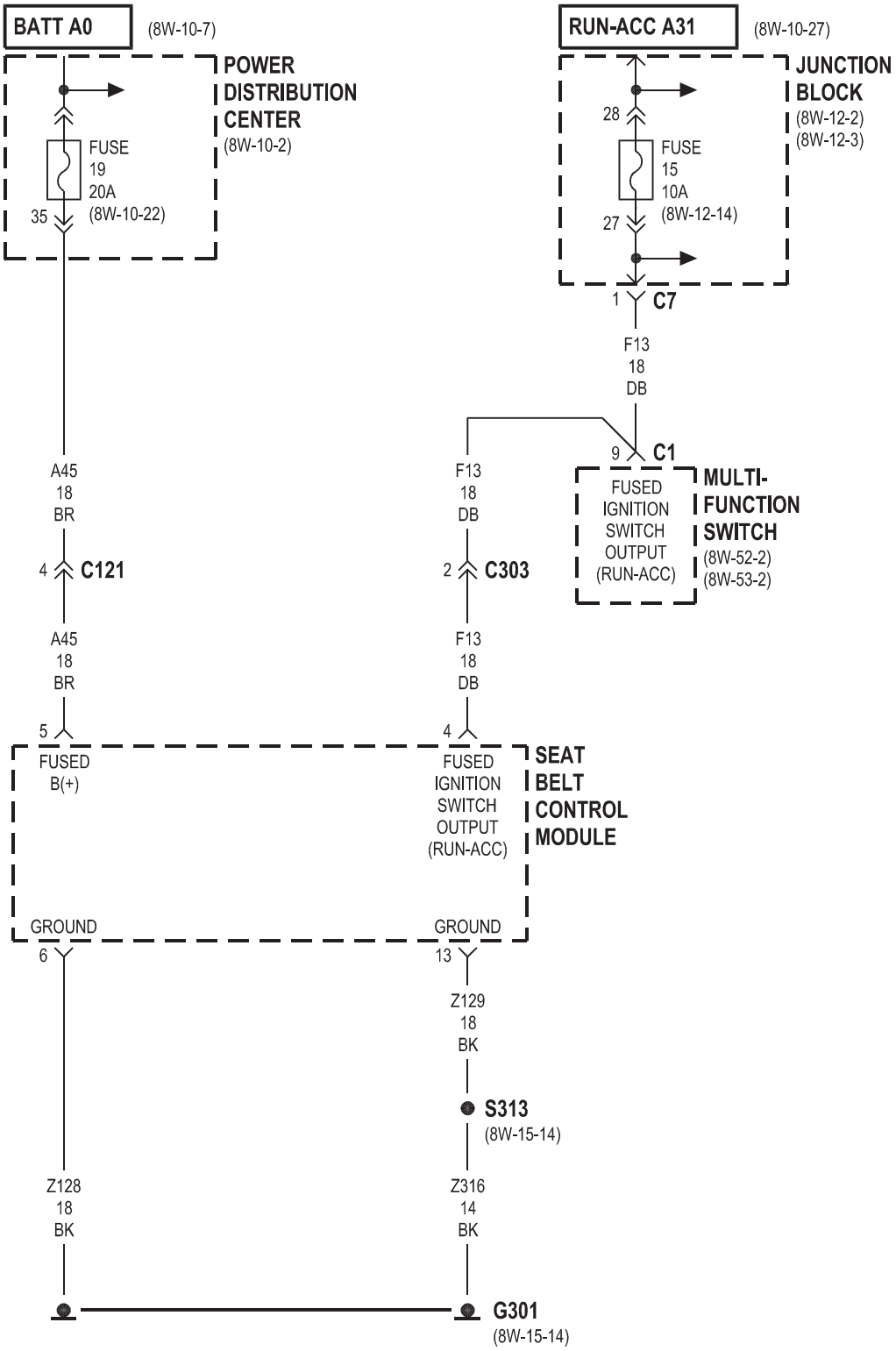
BATT A0
(8W-10-7)
POWER DISTRIBUTION CENTER
(8W-10-2)
FUSE 19 20A
(8W-10-22)
35
A45 18 BR
4
C121
A45 18 BR
5
FUSED B(+)
RUN-ACC A31
(8W-10-27)
JUNCTION BLOCK
(8W-12-2)
(8W-12-3)
28
FUSE 15 10A
(8W-12-14)
27
1
C7
F13 18 DB
9
C1
MULTI-FUNCTION SWITCH
(8W-52-2)
(8W-53-2)
FUSED IGNITION SWITCH OUTPUT (RUN-ACC)
F13 18 DB
2
C303
F13 18 DB
4
FUSED IGNITION SWITCH OUTPUT (RUN-ACC)
SEAT BELT CONTROL MODULE
GROUND
6
GROUND
13
Z129 18 BK
S313
(8W-15-14)
Z128 18 BK
Z316 14 BK
G301
(8W-15-14)

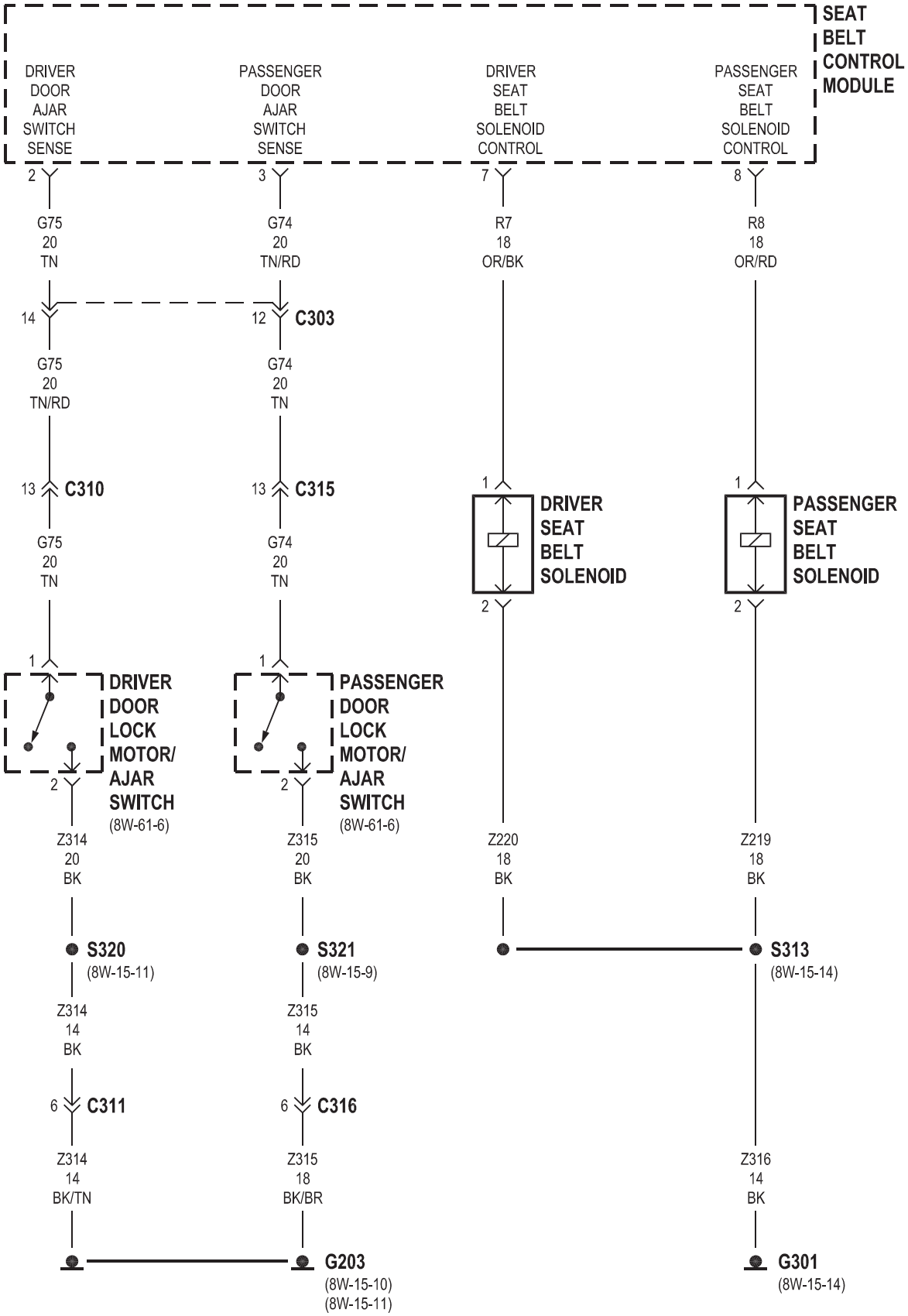
SEAT BELT CONTROL MODULE
DRIVER DOOR AJAR SWITCH SENSE
PASSENGER DOOR AJAR SWITCH SENSE
DRIVER SEAT BELT SOLENOID CONTROL
PASSENGER SEAT BELT SOLENOID CONTROL
2
3
7
8
G75 20 TN
G74 20 TN/RD
R7 18 OR/BK
R8 18 OR/RD
14
12
C303
G75 20 TN/RD
G74 20 TN
13
C310
13
C315
G75 20 TN
G74 20 TN
1
DRIVER SEAT BELT SOLENOID
1
PASSENGER SEAT BELT SOLENOID
2
2
1
DRIVER DOOR LOCK MOTOR/ AJAR SWITCH
(8W-61-6)
1
PASSENGER DOOR LOCK MOTOR/ AJAR SWITCH
(8W-61-6)
2
2
Z314 20 BK
Z315 20 BK
Z220 18 BK
Z219 18 BK
S320
(8W-15-11)
S321
(8W-15-9)
S313
(8W-15-14)
Z314 14 BK
Z315 14 BK
6
C311
6
C316
Z314 14 BK/TN
Z315 18 BK/BR
Z316 14 BK
G203
(8W-15-10)
(8W-15-11)
G301
(8W-15-14)

8W-44 INTERIOR LIGHTING

Component	Page
A/C-Heater Control	8W-44-7
Automatic Day/Night Mirror	8W-44-2
Automatic Temperature Control Head	8W-44-8
Body Control Module	8W-44-2, 3, 4, 5, 6, 7, 8
Decklid Release Solenoid/Ajar Switch	8W-44-4, 5
Dome Lamp	8W-44-3
Fuse 4	8W-44-8
Fuse 5	8W-44-2, 3, 4, 5, 6
Fuse 11	8W-44-7
G301	8W-44-3, 4, 5, 6, 7, 8
Garage Door Opener	8W-44-4, 5
Instrument Cluster	8W-44-7, 8
Junction Block	8W-44-2, 3, 4, 5, 6, 7, 8
Left Visor/Vanity Lamps	8W-44-4, 5
Multi-Function Switch	8W-44-7, 8
Overhead Map/Courtesy Lamps	8W-44-3
Power Antenna	8W-44-2
Rear Floor Courtesy Lamp	8W-44-2, 3
Right Visor/Vanity Lamps	8W-44-4, 5
Transmission Range Indicator Illumination	8W-44-6
Trunk Lamp	8W-44-4, 5

JR27

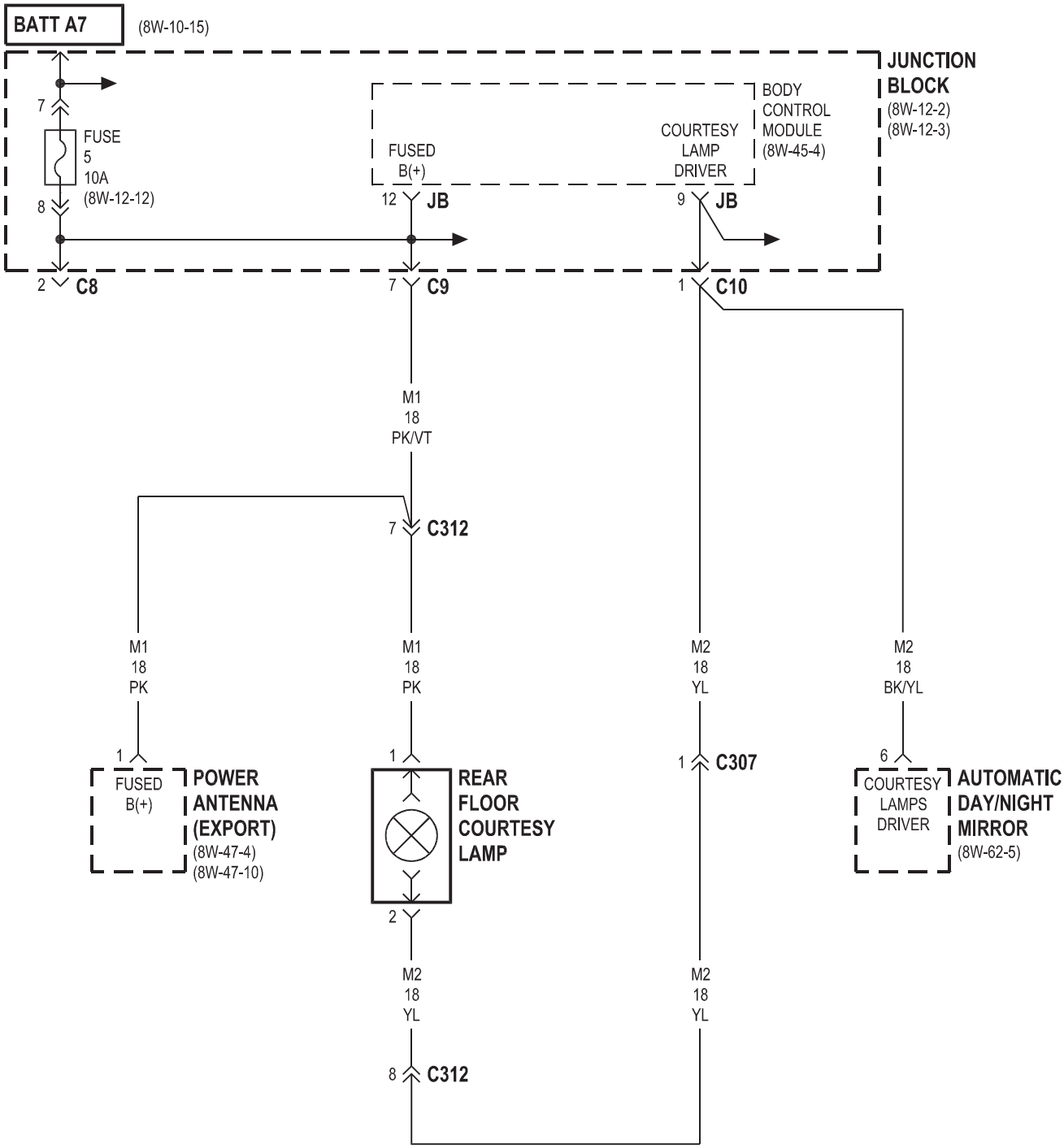
BATT A7
(8W-10-15)
JUNCTION BLOCK
(8W-12-2)
(8W-12-3)
BODY CONTROL MODULE
(8W-45-4)
FUSE 5 10A
(8W-12-12)
FUSED B(+)
COURTESY LAMP DRIVER
JB
JB
C8
C9
C10
M1 18 PK/VT
C312
M1 18 PK
M1 18 PK
M2 18 YL
M2 18 BK/YL
C307
FUSED B(+)
POWER ANTENNA (EXPORT)
(8W-47-4)
(8W-47-10)
REAR FLOOR COURTESY LAMP
COURTESY LAMPS DRIVER
AUTOMATIC DAY/NIGHT MIRROR
(8W-62-5)
M2 18 YL
M2 18 YL
C312

JR41

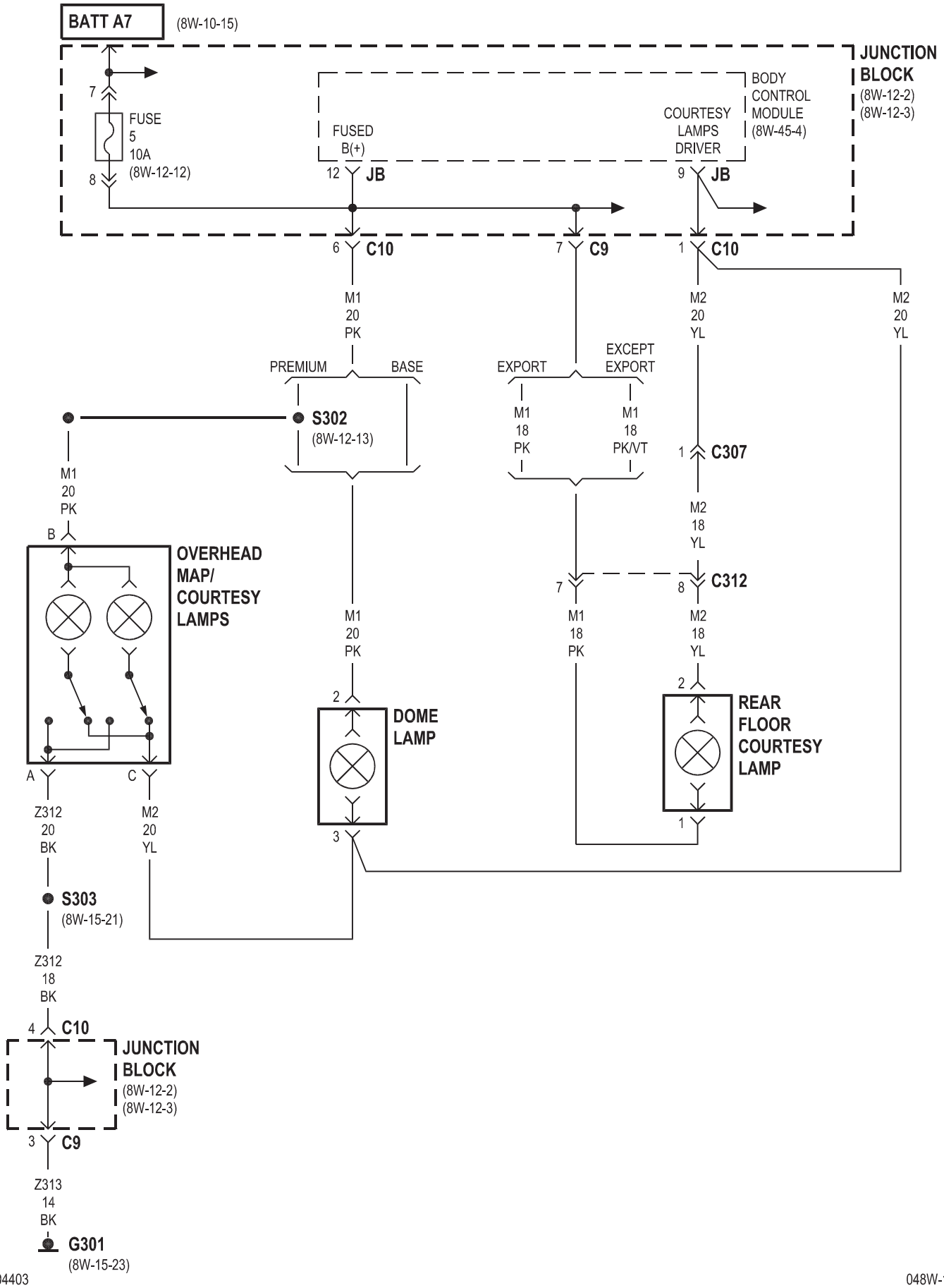
BATT A7
(8W-10-15)
JUNCTION BLOCK
(8W-12-2)
(8W-12-3)
BODY CONTROL MODULE
(8W-45-4)
FUSE 5 10A
(8W-12-12)
FUSED B(+)
COURTESY LAMPS DRIVER
JB
C10
C9
M1 20 PK
M2 20 YL
PREMIUM
BASE
EXPORT
EXCEPT EXPORT
S302
(8W-12-13)
M1 18 PK
M1 18 PK/VT
C307
M2 18 YL
C312
OVERHEAD MAP/ COURTESY LAMPS
DOME LAMP
REAR FLOOR COURTESY LAMP
Z312 20 BK
S303
(8W-15-21)
Z312 18 BK
JUNCTION BLOCK
(8W-12-2)
(8W-12-3)
Z313 14 BK
G301
(8W-15-23)

JR27/JR41 EXPORT

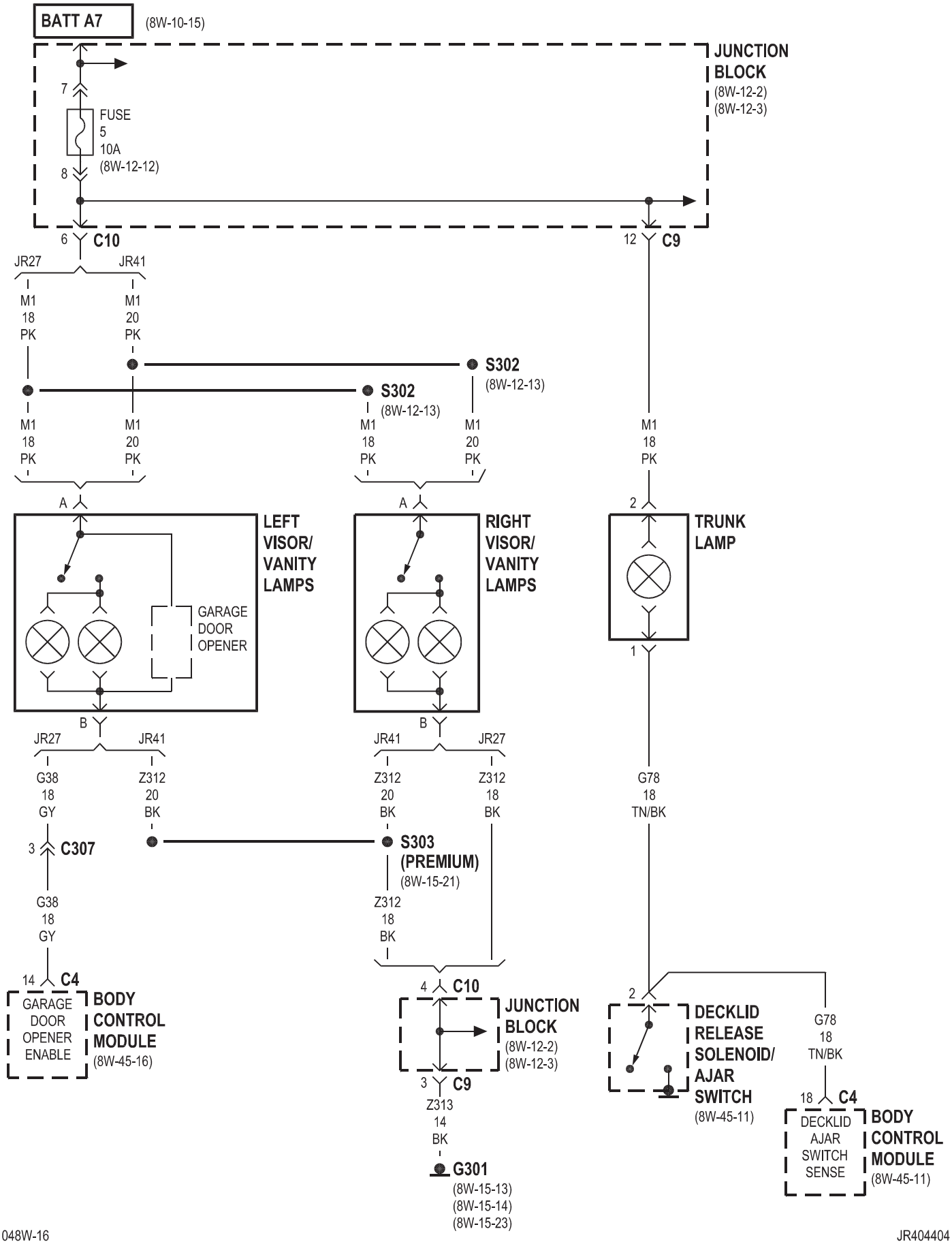

JR41 EXCEPT EXPORT

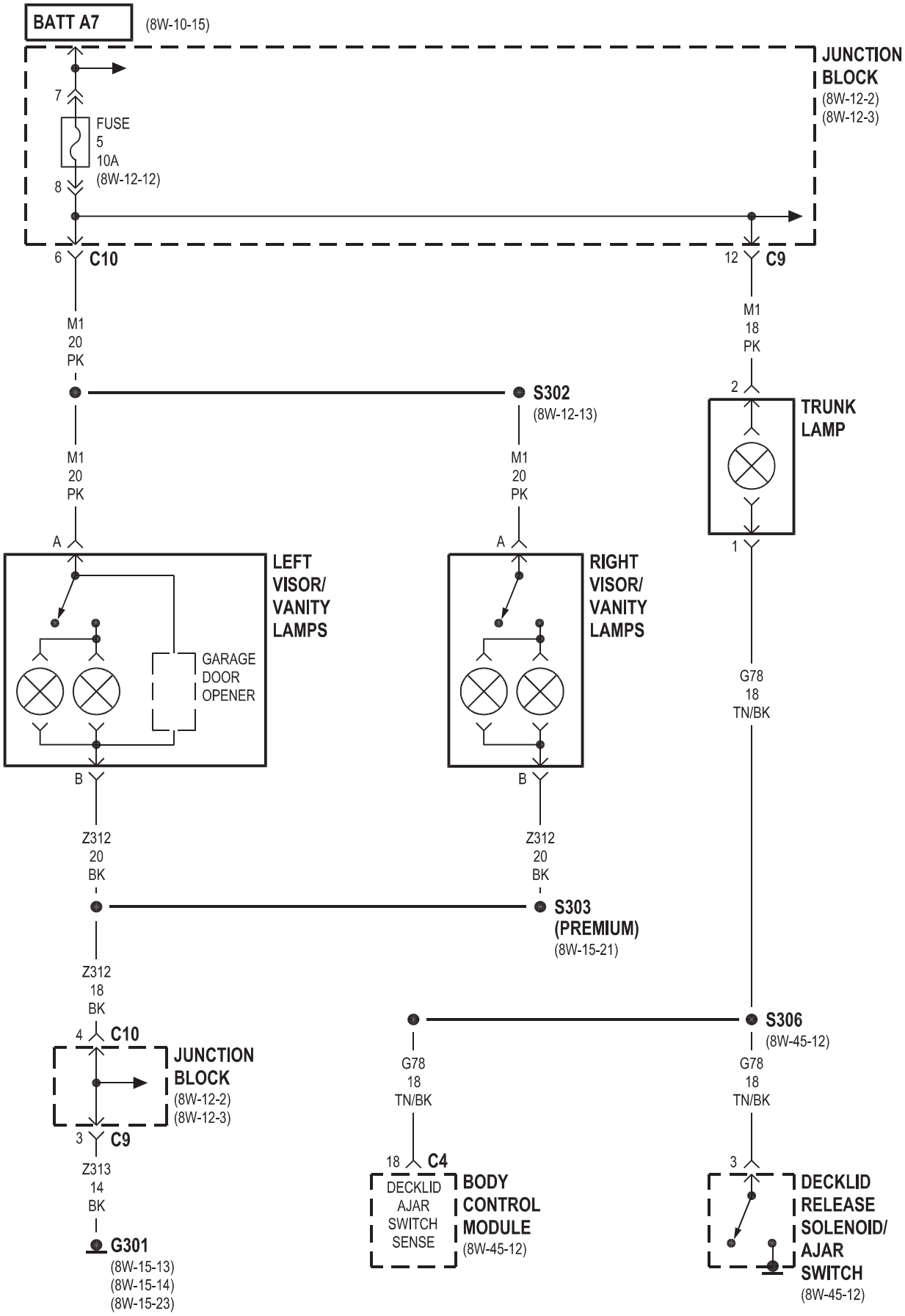

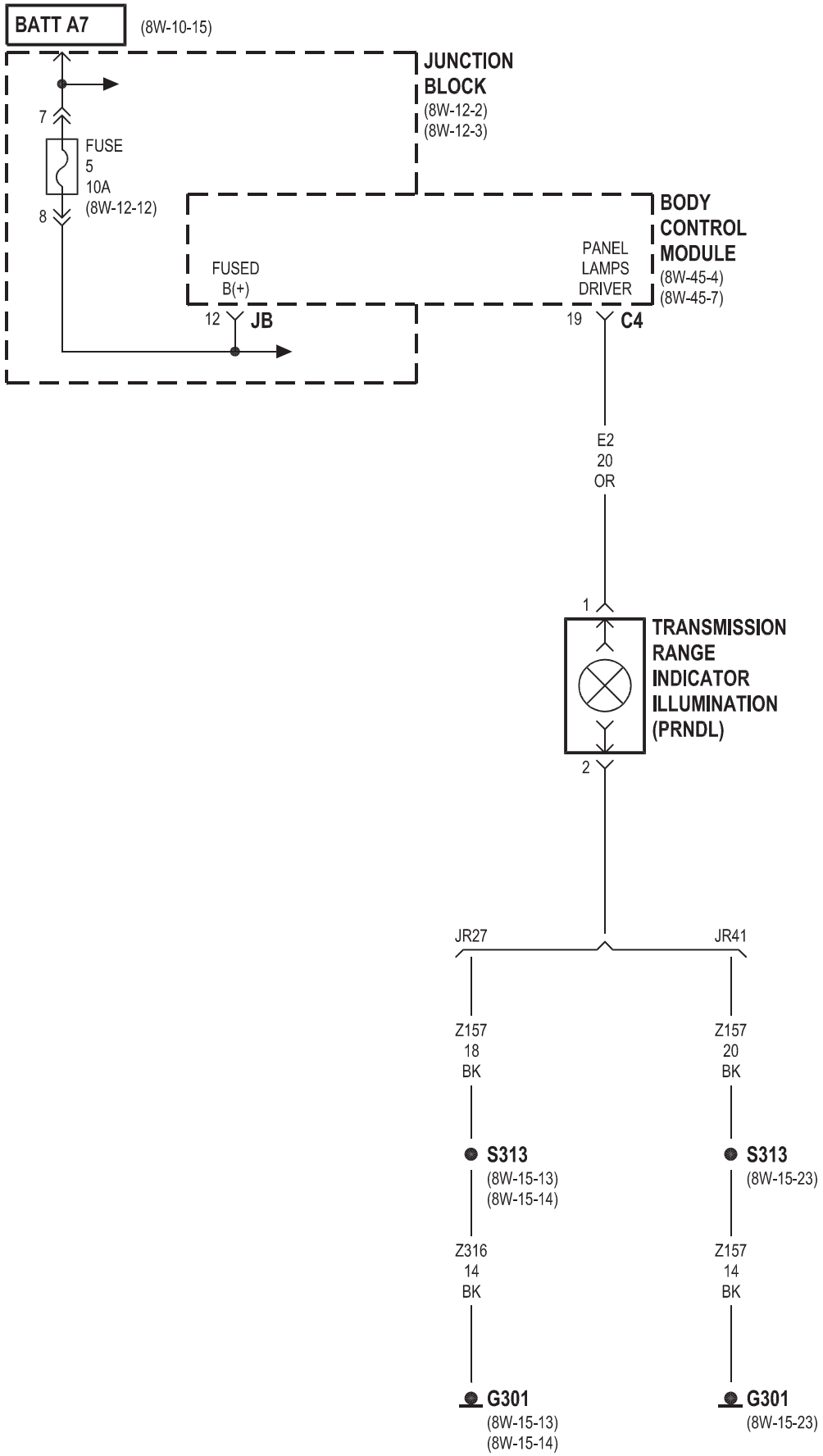
BATT A7
(8W-10-15)
JUNCTION BLOCK
(8W-12-2)
(8W-12-3)
7
FUSE
5
10A
(8W-12-12)
8
BODY CONTROL MODULE
(8W-45-4)
(8W-45-7)
FUSED B(+)
PANEL LAMPS DRIVER
12
JB
19
C4
E2
20
OR
1
TRANSMISSION RANGE INDICATOR ILLUMINATION (PRNDL)
2
JR27
JR41
Z157
18
BK
Z157
20
BK
S313
(8W-15-13)
(8W-15-14)
S313
(8W-15-23)
Z316
14
BK
Z157
14
BK
G301
(8W-15-13)
(8W-15-14)
G301
(8W-15-23)

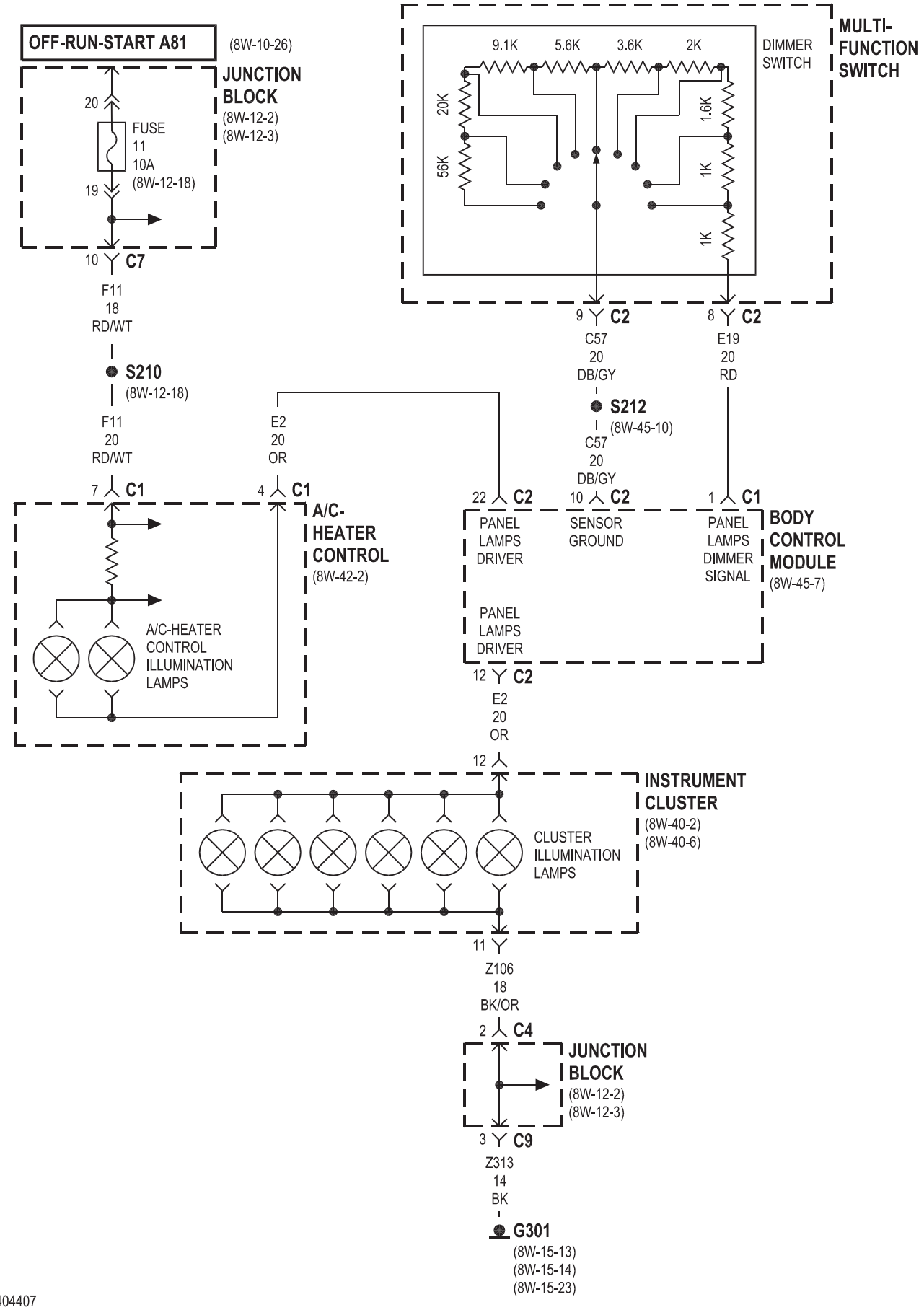
OFF-RUN-START A81
(8W-10-26)
JUNCTION BLOCK
(8W-12-2)
(8W-12-3)
20
FUSE 11 10A
(8W-12-18)
19
10 C7
F11 18 RD/WT
S210
(8W-12-18)
F11 20 RD/WT
7 C1
A/C-HEATER CONTROL
(8W-42-2)
A/C-HEATER CONTROL ILLUMINATION LAMPS
E2 20 OR
4 C1
MULTI-FUNCTION SWITCH
DIMMER SWITCH
9.1K
5.6K
3.6K
2K
20K
56K
1.6K
1K
1K
9 C2
C57 20 DB/GY
8 C2
E19 20 RD
S212
(8W-45-10)
C57 20 DB/GY
22 C2
PANEL LAMPS DRIVER
10 C2
SENSOR GROUND
1 C1
PANEL LAMPS DIMMER SIGNAL
BODY CONTROL MODULE
(8W-45-7)
PANEL LAMPS DRIVER
12 C2
E2 20 OR
12
INSTRUMENT CLUSTER
(8W-40-2)
(8W-40-6)
CLUSTER ILLUMINATION LAMPS
11
Z106 18 BK/OR
2 C4
JUNCTION BLOCK
(8W-12-2)
(8W-12-3)
3 C9
Z313 14 BK
G301
(8W-15-13)
(8W-15-14)
(8W-15-23)

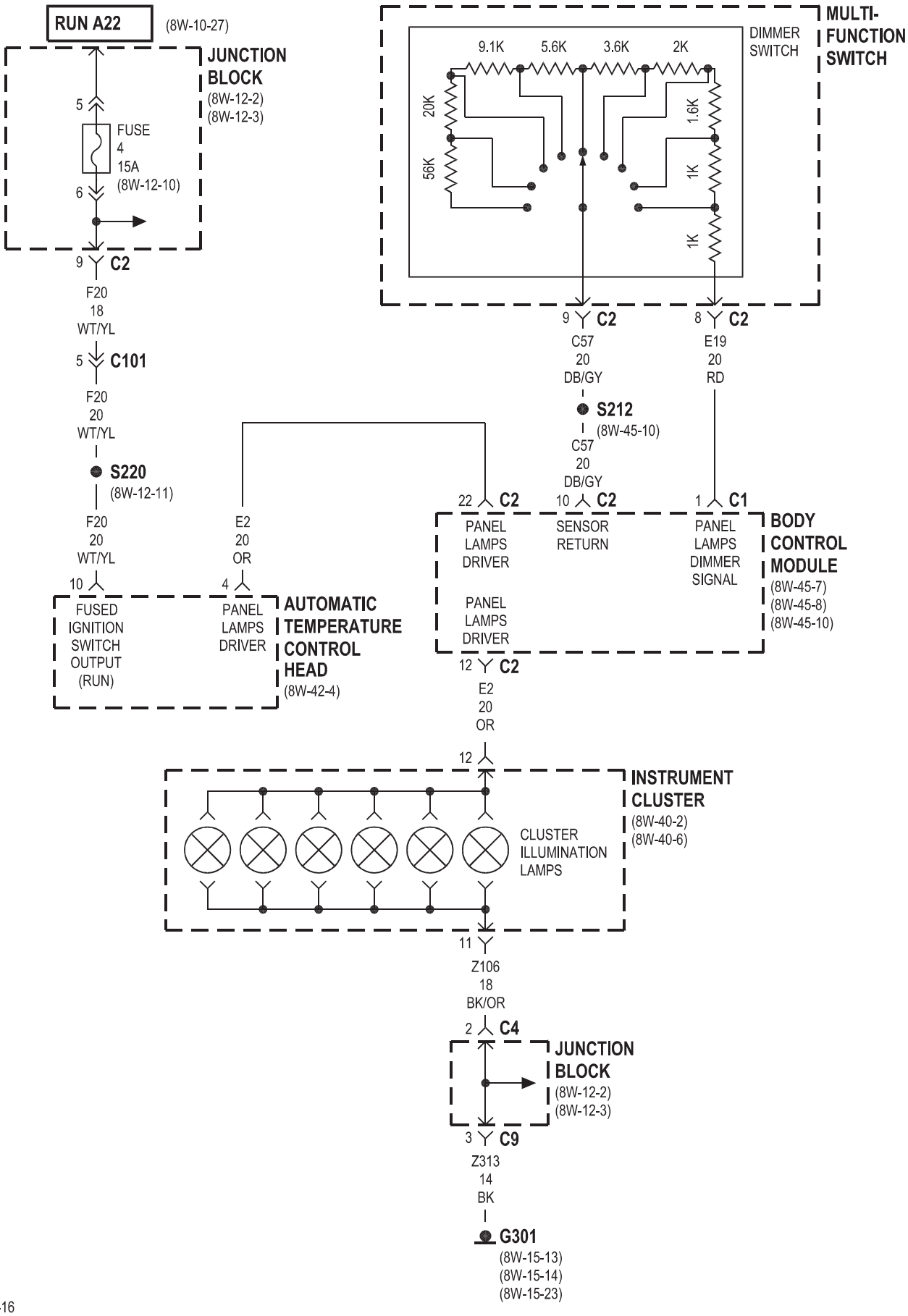
RUN A22
(8W-10-27)
JUNCTION BLOCK
(8W-12-2)
(8W-12-3)
5
FUSE
4
15A
(8W-12-10)
6
9 C2
F20
18
WT/YL
5 C101
F20
20
WT/YL
S220
(8W-12-11)
F20
20
WT/YL
10
FUSED IGNITION SWITCH OUTPUT (RUN)
E2
20
OR
4
PANEL LAMPS DRIVER
AUTOMATIC TEMPERATURE CONTROL HEAD
(8W-42-4)
MULTI-FUNCTION SWITCH
DIMMER SWITCH
9.1K
5.6K
3.6K
2K
20K
56K
1.6K
1K
1K
9 C2
C57
20
DB/GY
S212
(8W-45-10)
C57
20
DB/GY
8 C2
E19
20
RD
22 C2
PANEL LAMPS DRIVER
10 C2
SENSOR RETURN
1 C1
PANEL LAMPS DIMMER SIGNAL
PANEL LAMPS DRIVER
BODY CONTROL MODULE
(8W-45-7)
(8W-45-8)
(8W-45-10)
12 C2
E2
20
OR
12
CLUSTER ILLUMINATION LAMPS
INSTRUMENT CLUSTER
(8W-40-2)
(8W-40-6)
11
Z106
18
BK/OR
2 C4
JUNCTION BLOCK
(8W-12-2)
(8W-12-3)
3 C9
Z313
14
BK
G301
(8W-15-13)
(8W-15-14)
(8W-15-23)

8W-45 BODY CONTROL MODULE

Component	Page
A/C Evaporator Temperature Sensor	8W-45-8, 10
A/C-Heater Control	8W-45-7, 8, 9, 10
Airbag Control Module	8W-45-6
Auto Headlamp Relay	8W-45-10
Automatic Day/Night Mirror	8W-45-4
Automatic Temperature Control Head	8W-45-6, 7, 8, 9, 10
Blend Door Actuator	8W-45-8, 9, 10, 11, 12
Blower Motor Power Module	8W-45-8, 17
Blower Motor Resistor Block	8W-45-8
Body Control Module	8W-45-2, 3, 4, 5, 6, 7, 8, 9, 10, 11, 12, 13, 14, 15, 16, 17, 18
Clockspring	8W-45-7
Controller Antilock Brake	8W-45-7
Data Link Connector	8W-45-6
Decklid Cylinder Lock Switch	8W-45-13, 15
Decklid Release Solenoid/Ajar Switch	8W-45-11, 12
Decklid Release Switch	8W-45-11, 12
Dome Lamp	8W-45-4
Driver Cylinder Lock Switch	8W-45-13, 15
Driver Door Lock Motor/Ajar Switch	8W-45-13, 14, 15, 16
Driver Door Lock Switch	8W-45-14, 16
Front Washer Pump Motor	8W-45-13, 15
Front Wiper High/Low Relay	8W-45-17, 18
Front Wiper Motor	8W-45-11, 12
Front Wiper On/Off Relay	8W-45-2
Fuel Pump Module	8W-45-13, 15
Fuse 3	8W-45-2
Fuse 5	8W-45-4
Fuse 7	8W-45-17
Fuse 8	8W-45-2, 3
Fuse 9	8W-45-4
Fuse 11	8W-45-5
Fuse 14	8W-45-2
Fuse 15	8W-45-17, 18
Fuse 17	8W-45-2
Fuse 18	8W-45-2
Fuse 23	8W-45-18
G108	8W-45-2
G203	8W-45-2, 11, 12
G301	8W-45-3
G302	8W-45-11, 12
Headlamp Delay Relay	8W-45-4
Headlamp Washer Relay	8W-45-2
Heated Seat Relay	8W-45-18
Horn Relay	8W-45-3
Ignition Switch	8W-45-2, 11, 12
Instrument Cluster	8W-45-6, 7
Junction Block	8W-45-2, 3, 4, 5, 17, 18
Left Rear Door Lock Motor/Ajar Switch	8W-45-13, 14
Left Visor/Vanity Lamps	8W-45-16
Mode Door Actuator	8W-45-8, 9, 10, 11, 12
Multi-Function Switch	8W-45-3, 5, 7, 10, 13, 15
Overhead Map/Courtesy Lamps	8W-45-4
Park Lamp Relay	8W-45-17
Passenger Door Lock Motor/Ajar Switch	8W-45-13, 14, 15, 16
Passenger Door Lock Switch	8W-45-14, 16
Power Distribution Center	8W-45-2, 18
Power Top Switch	8W-45-6
Power Top Up/Down Relays	8W-45-2
Powertrain Control Module	8W-45-6
Radio	8W-45-2, 6, 7
Rear Floor Courtesy Lamp	8W-45-4
Rear Window Defogger Relay	8W-45-18
Recirculation Door Actuator	8W-45-8
Remote Keyless Entry Antenna	8W-45-7
Right Rear Door Lock Motor/Ajar Switch	8W-45-13, 14
Seat Belt Control Module	8W-45-15
Sentry Key Immobilizer Module	8W-45-7
Sun Sensor	8W-45-9, 10
Transmission Control Module	8W-45-6
Transmission Range Indicator Illumination	8W-45-7
Trunk Lamp	8W-45-11, 12
Window Drop Relay Assembly	8W-45-16

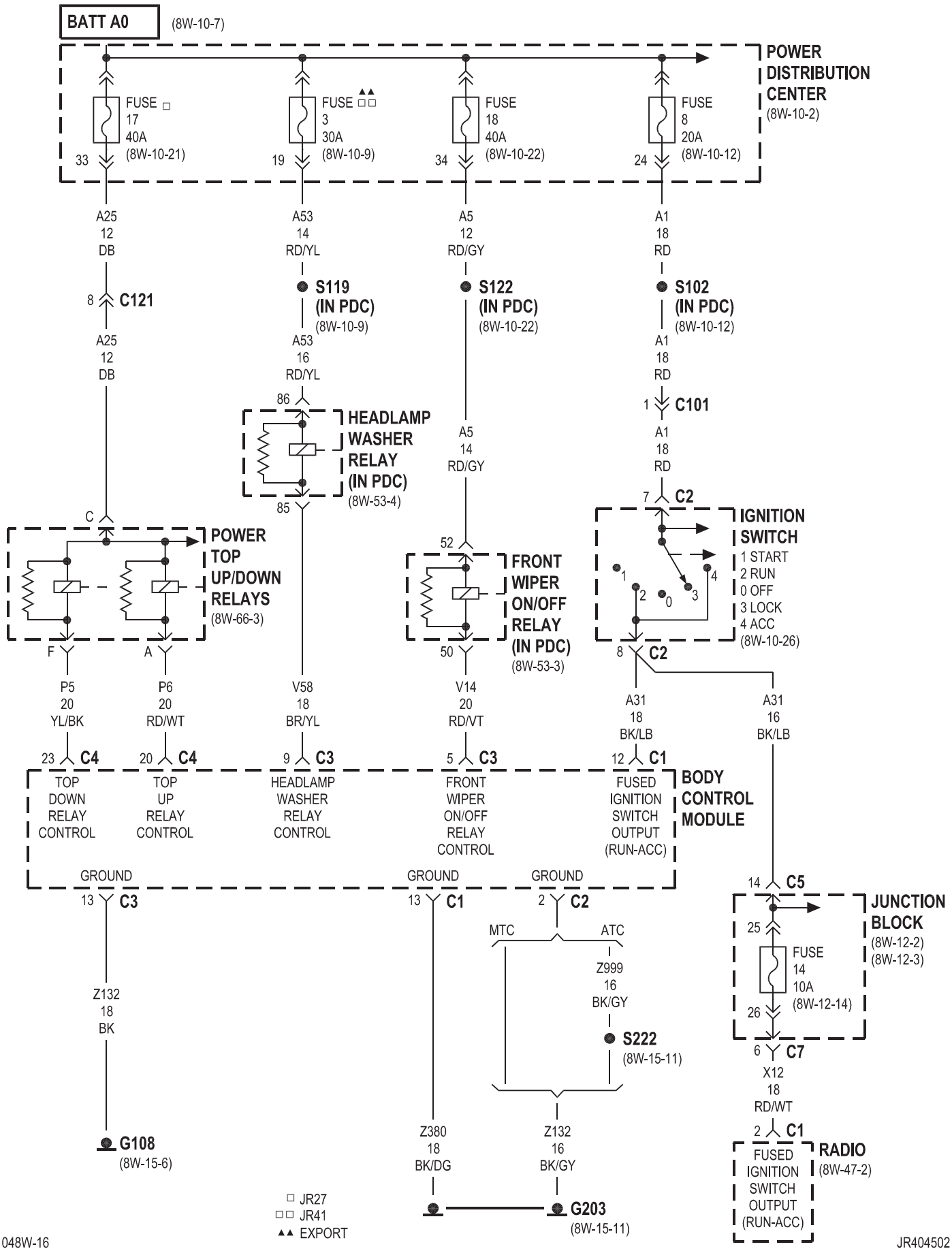
BATT A0
(8W-10-7)
POWER DISTRIBUTION CENTER
(8W-10-2)
FUSE 17 40A (8W-10-21)
FUSE 3 30A (8W-10-9)
FUSE 18 40A (8W-10-22)
FUSE 8 20A (8W-10-12)
33
19
34
24
A25 12 DB
A53 14 RD/YL
A5 12 RD/GY
A1 18 RD
S119 (IN PDC) (8W-10-9)
S122 (IN PDC) (8W-10-22)
S102 (IN PDC) (8W-10-12)
8 C121
A25 12 DB
A53 16 RD/YL
A1 18 RD
1 C101
A1 18 RD
86
85
HEADLAMP WASHER RELAY (IN PDC) (8W-53-4)
A5 14 RD/GY
7 C2
C
POWER TOP UP/DOWN RELAYS (8W-66-3)
52
FRONT WIPER ON/OFF RELAY (IN PDC) (8W-53-3)
IGNITION SWITCH
1 START
2 RUN
0 OFF
3 LOCK
4 ACC
(8W-10-26)
F
A
50
8 C2
P5 20 YL/BK
P6 20 RD/WT
V58 18 BR/YL
V14 20 RD/VT
A31 18 BK/LB
A31 16 BK/LB
23 C4
20 C4
9 C3
5 C3
12 C1
TOP DOWN RELAY CONTROL
TOP UP RELAY CONTROL
HEADLAMP WASHER RELAY CONTROL
FRONT WIPER ON/OFF RELAY CONTROL
FUSED IGNITION SWITCH OUTPUT (RUN-ACC)
BODY CONTROL MODULE
GROUND
13 C3
GROUND
13 C1
GROUND
2 C2
14 C5
JUNCTION BLOCK
(8W-12-2)
(8W-12-3)
MTC
ATC
25
FUSE 14 10A (8W-12-14)
26
Z999 16 BK/GY
S222 (8W-15-11)
6 C7
Z132 18 BK
X12 18 RD/WT
2 C1
G108 (8W-15-6)
Z380 18 BK/DG
Z132 16 BK/GY
FUSED IGNITION SWITCH OUTPUT (RUN-ACC)
RADIO
(8W-47-2)
JR27
JR41
EXPORT
G203 (8W-15-11)

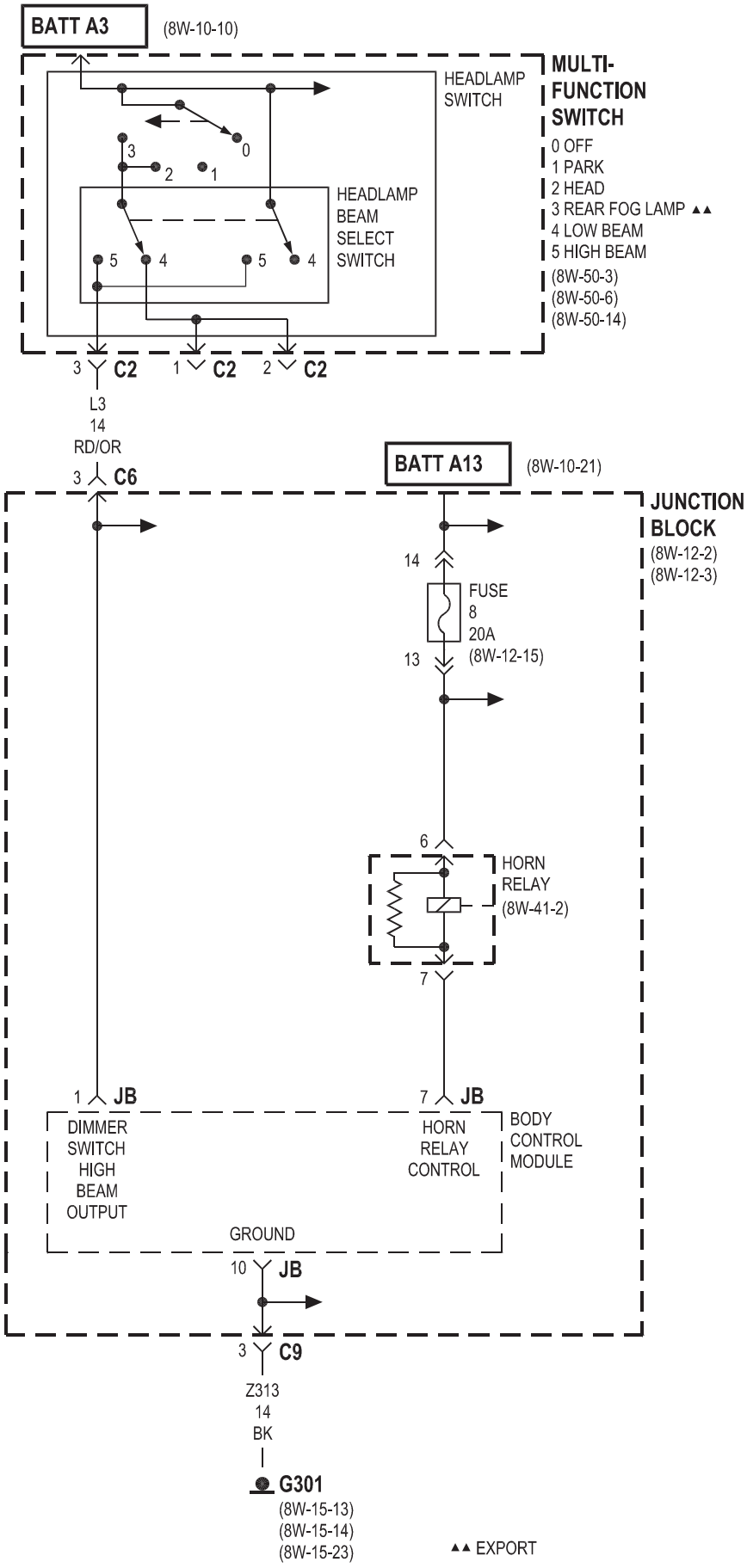
BATT A3
(8W-10-10)
HEADLAMP SWITCH
MULTI-FUNCTION SWITCH
0 OFF
1 PARK
2 HEAD
3 REAR FOG LAMP ▲▲
4 LOW BEAM
5 HIGH BEAM
(8W-50-3)
(8W-50-6)
(8W-50-14)
HEADLAMP BEAM SELECT SWITCH
3 C2
1 C2
2 C2
L3
14
RD/OR
3 C6
BATT A13
(8W-10-21)
JUNCTION BLOCK
(8W-12-2)
(8W-12-3)
14
FUSE
8
20A
(8W-12-15)
13
6
HORN RELAY
(8W-41-2)
7
1 JB
DIMMER SWITCH HIGH BEAM OUTPUT
7 JB
HORN RELAY CONTROL
BODY CONTROL MODULE
GROUND
10 JB
3 C9
Z313
14
BK
G301
(8W-15-13)
(8W-15-14)
(8W-15-23)
▲▲ EXPORT

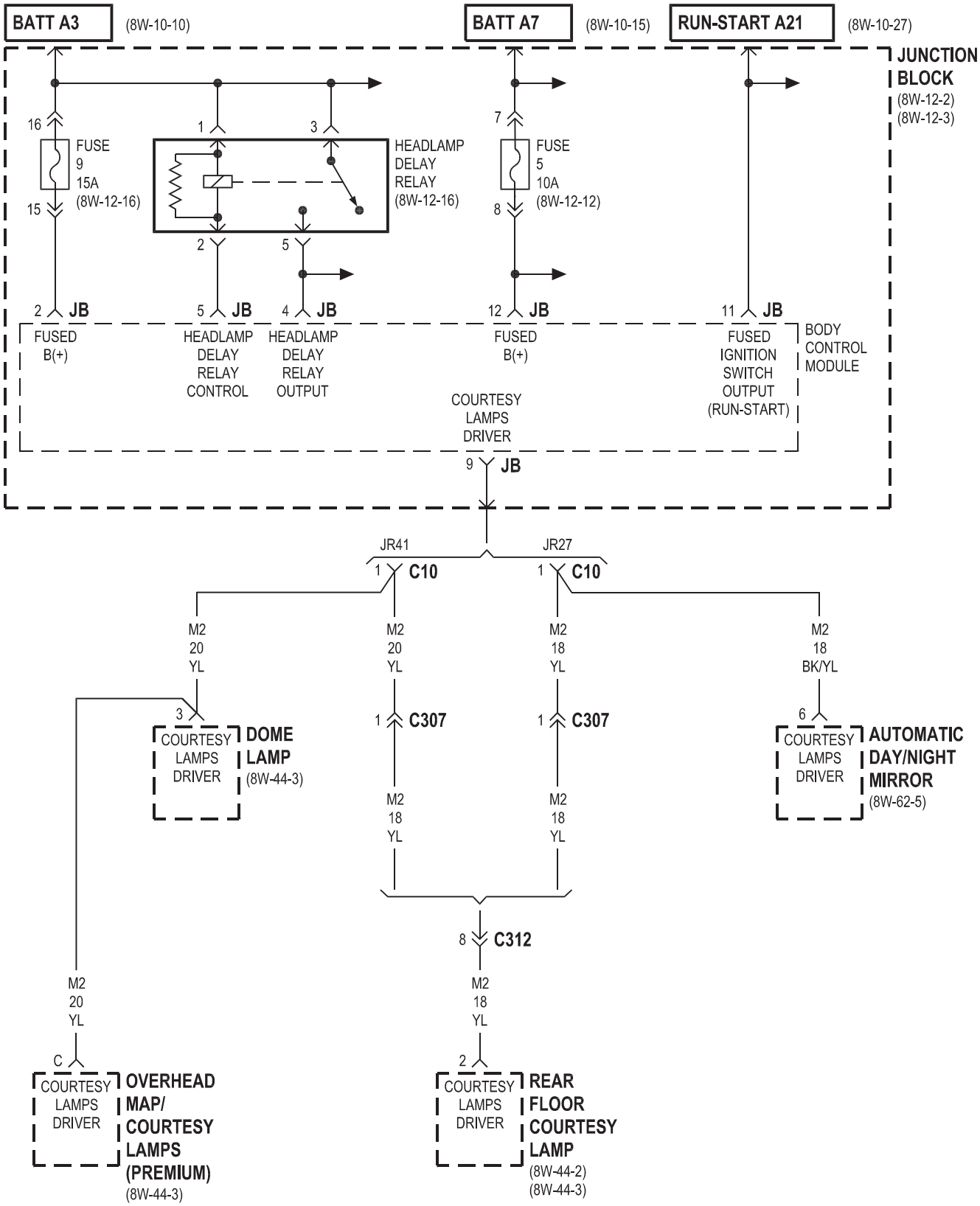
BATT A3
(8W-10-10)
BATT A7
(8W-10-15)
RUN-START A21
(8W-10-27)
JUNCTION BLOCK
(8W-12-2)
(8W-12-3)
16
FUSE 9 15A
(8W-12-16)
15
1
3
HEADLAMP DELAY RELAY
(8W-12-16)
2
5
7
FUSE 5 10A
(8W-12-12)
8
2 JB
FUSED B(+)
5 JB
HEADLAMP DELAY RELAY CONTROL
4 JB
HEADLAMP DELAY RELAY OUTPUT
12 JB
FUSED B(+)
11 JB
FUSED IGNITION SWITCH OUTPUT (RUN-START)
BODY CONTROL MODULE
COURTESY LAMPS DRIVER
9 JB
JR41
JR27
1 C10
1 C10
M2 20 YL
M2 20 YL
M2 18 YL
M2 18 BK/YL
3
COURTESY LAMPS DRIVER
DOME LAMP
(8W-44-3)
1 C307
1 C307
6
COURTESY LAMPS DRIVER
AUTOMATIC DAY/NIGHT MIRROR
(8W-62-5)
M2 18 YL
M2 18 YL
8 C312
M2 20 YL
M2 18 YL
C
COURTESY LAMPS DRIVER
OVERHEAD MAP/ COURTESY LAMPS (PREMIUM)
(8W-44-3)
2
COURTESY LAMPS DRIVER
REAR FLOOR COURTESY LAMP
(8W-44-2)
(8W-44-3)

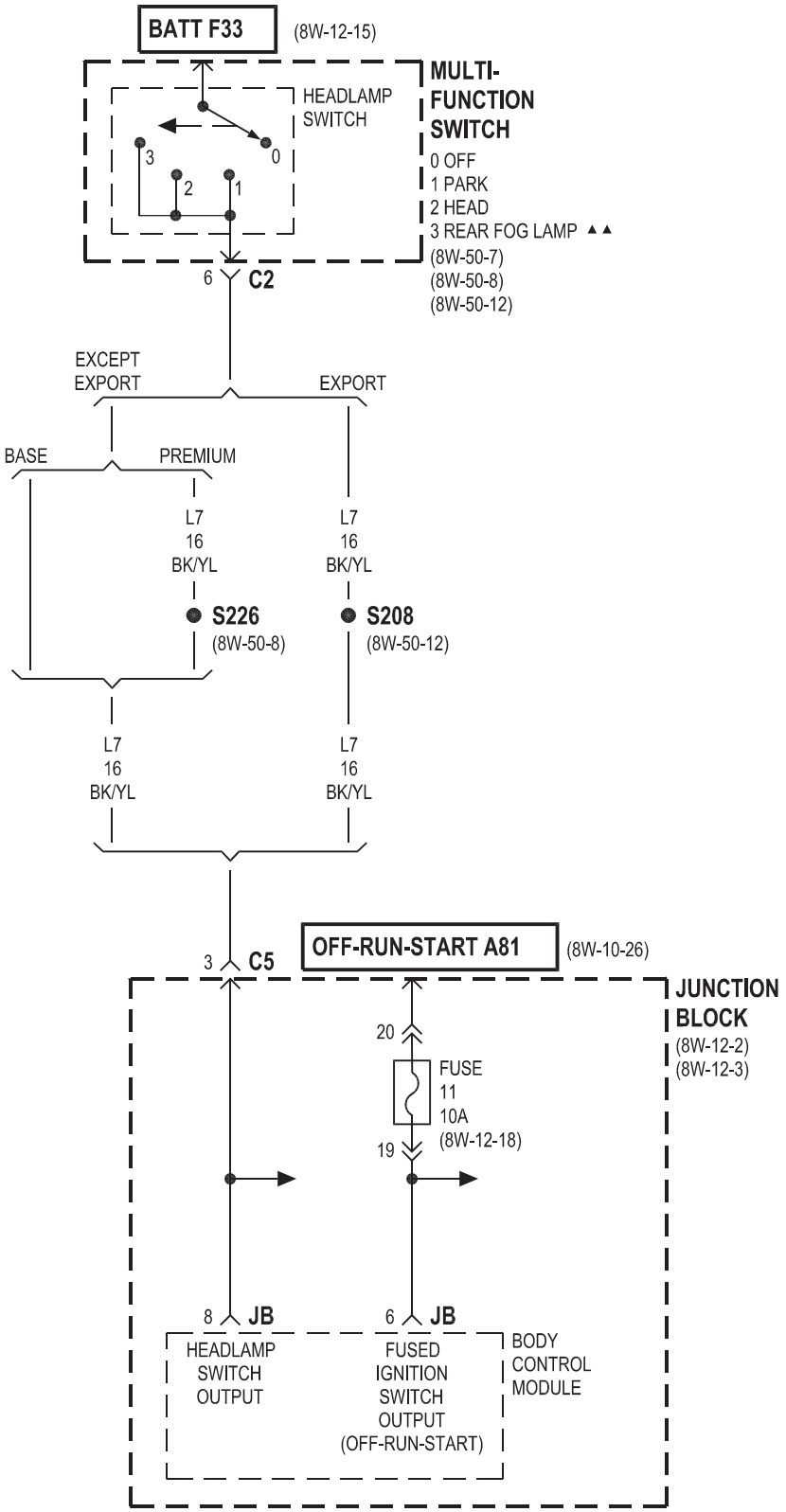
BATT F33
(8W-12-15)
MULTI-FUNCTION SWITCH
HEADLAMP SWITCH
0 OFF
1 PARK
2 HEAD
3 REAR FOG LAMP ▲▲
(8W-50-7)
(8W-50-8)
(8W-50-12)
6
C2
EXCEPT EXPORT
EXPORT
BASE
PREMIUM
L7
16
BK/YL
S226
(8W-50-8)
S208
(8W-50-12)
3
C5
OFF-RUN-START A81
(8W-10-26)
JUNCTION BLOCK
(8W-12-2)
(8W-12-3)
20
FUSE
11
10A
(8W-12-18)
19
8
JB
6
JB
HEADLAMP SWITCH OUTPUT
FUSED IGNITION SWITCH OUTPUT (OFF-RUN-START)
BODY CONTROL MODULE

▲▲ EXPORT

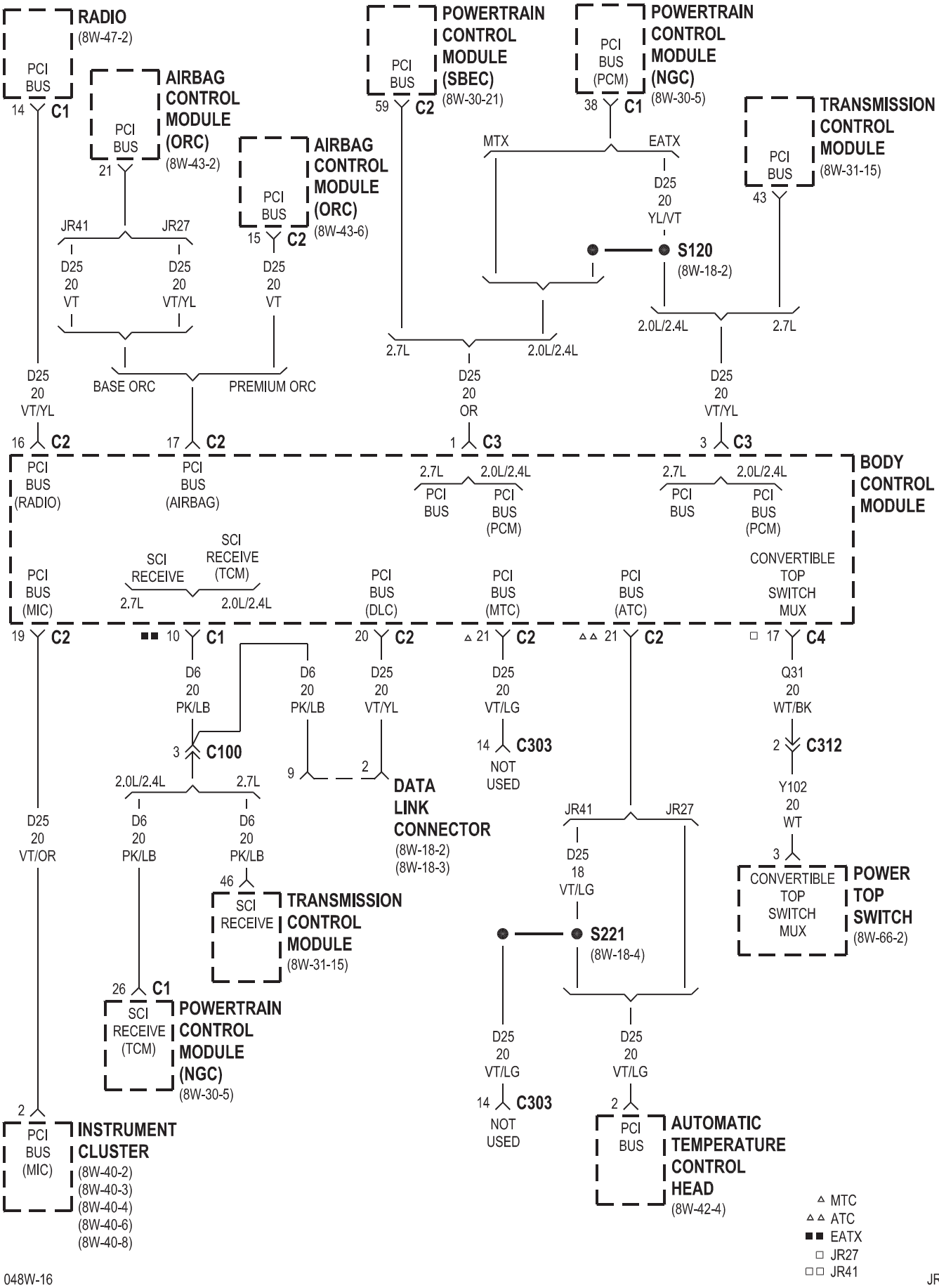
RADIO
(8W-47-2)
PCI BUS
14 C1
AIRBAG CONTROL MODULE (ORC)
(8W-43-2)
PCI BUS
21
AIRBAG CONTROL MODULE (ORC)
(8W-43-6)
PCI BUS
15 C2
JR41
JR27
D25 20 VT
D25 20 VT/YL
D25 20 VT
BASE ORC
PREMIUM ORC
D25 20 VT/YL
16 C2
17 C2
POWERTRAIN CONTROL MODULE (SBEC)
(8W-30-21)
PCI BUS
59 C2
POWERTRAIN CONTROL MODULE (NGC)
(8W-30-5)
PCI BUS (PCM)
38 C1
MTX
EATX
D25 20 YL/VT
S120
(8W-18-2)
TRANSMISSION CONTROL MODULE
(8W-31-15)
PCI BUS
43
2.7L
2.0L/2.4L
D25 20 OR
1 C3
2.0L/2.4L
2.7L
D25 20 VT/YL
3 C3
BODY CONTROL MODULE
PCI BUS (RADIO)
PCI BUS (AIRBAG)
2.7L
2.0L/2.4L
PCI BUS
PCI BUS (PCM)
2.7L
2.0L/2.4L
PCI BUS
PCI BUS (PCM)
PCI BUS (MIC)
SCI RECEIVE
SCI RECEIVE (TCM)
2.7L
2.0L/2.4L
PCI BUS (DLC)
PCI BUS (MTC)
PCI BUS (ATC)
CONVERTIBLE TOP SWITCH MUX
19 C2
10 C1
20 C2
21 C2
21 C2
17 C4
D6 20 PK/LB
D6 20 PK/LB
D25 20 VT/YL
D25 20 VT/LG
Q31 20 WT/BK
3 C100
9
2
14 C303
NOT USED
2 C312
2.0L/2.4L
2.7L
DATA LINK CONNECTOR
(8W-18-2)
(8W-18-3)
Y102 20 WT
D25 20 VT/OR
D6 20 PK/LB
D6 20 PK/LB
JR41
JR27
D25 18 VT/LG
3
CONVERTIBLE TOP SWITCH MUX
POWER TOP SWITCH
(8W-66-2)
46
SCI RECEIVE
TRANSMISSION CONTROL MODULE
(8W-31-15)
S221
(8W-18-4)
26 C1
SCI RECEIVE (TCM)
POWERTRAIN CONTROL MODULE (NGC)
(8W-30-5)
D25 20 VT/LG
14 C303
NOT USED
D25 20 VT/LG
2
PCI BUS
AUTOMATIC TEMPERATURE CONTROL HEAD
(8W-42-4)
2
PCI BUS (MIC)
INSTRUMENT CLUSTER
(8W-40-2)
(8W-40-3)
(8W-40-4)
(8W-40-6)
(8W-40-8)
MTC
ATC
EATX
JR27
JR41

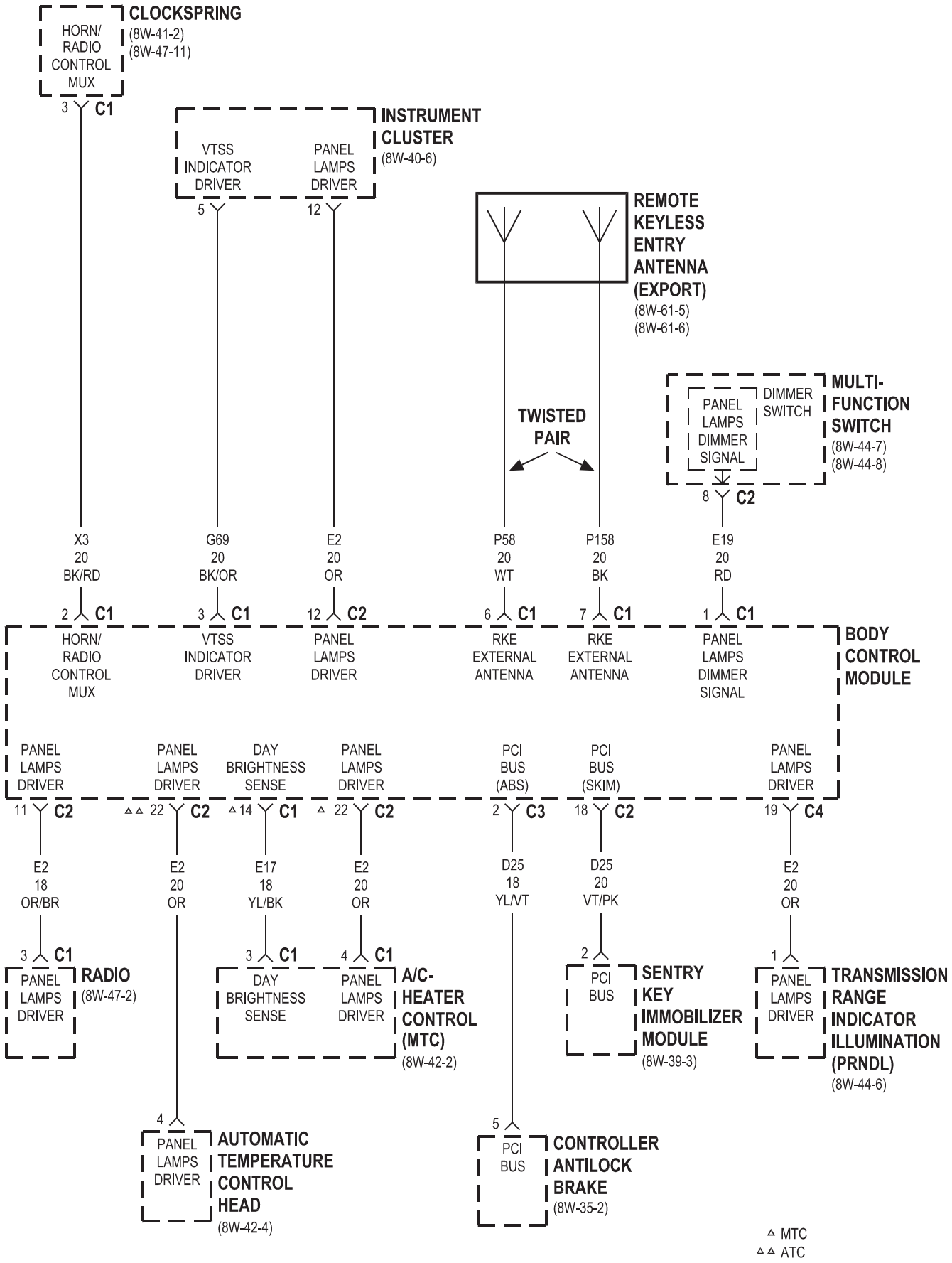
CLOCKSPRING
(8W-41-2)
(8W-47-11)
HORN/ RADIO CONTROL MUX
3 C1
INSTRUMENT CLUSTER
(8W-40-6)
VTSS INDICATOR DRIVER
PANEL LAMPS DRIVER
5
12
REMOTE KEYLESS ENTRY ANTENNA (EXPORT)
(8W-61-5)
(8W-61-6)
TWISTED PAIR
MULTI-FUNCTION SWITCH
(8W-44-7)
(8W-44-8)
PANEL LAMPS DIMMER SIGNAL
DIMMER SWITCH
8 C2
X3 20 BK/RD
G69 20 BK/OR
E2 20 OR
P58 20 WT
P158 20 BK
E19 20 RD
2 C1
3 C1
12 C2
6 C1
7 C1
1 C1
HORN/ RADIO CONTROL MUX
VTSS INDICATOR DRIVER
PANEL LAMPS DRIVER
RKE EXTERNAL ANTENNA
RKE EXTERNAL ANTENNA
PANEL LAMPS DIMMER SIGNAL
BODY CONTROL MODULE
PANEL LAMPS DRIVER
PANEL LAMPS DRIVER
DAY BRIGHTNESS SENSE
PANEL LAMPS DRIVER
PCI BUS (ABS)
PCI BUS (SKIM)
PANEL LAMPS DRIVER
11 C2
22 C2
14 C1
22 C2
2 C3
18 C2
19 C4
E2 18 OR/BR
E2 20 OR
E17 18 YL/BK
E2 20 OR
D25 18 YL/VT
D25 20 VT/PK
E2 20 OR
3 C1
PANEL LAMPS DRIVER
RADIO
(8W-47-2)
3 C1
4 C1
DAY BRIGHTNESS SENSE
PANEL LAMPS DRIVER
A/C-HEATER CONTROL (MTC)
(8W-42-2)
2
PCI BUS
SENTRY KEY IMMOBILIZER MODULE
(8W-39-3)
1
PANEL LAMPS DRIVER
TRANSMISSION RANGE INDICATOR ILLUMINATION (PRNDL)
(8W-44-6)
4
PANEL LAMPS DRIVER
AUTOMATIC TEMPERATURE CONTROL HEAD
(8W-42-4)
5
PCI BUS
CONTROLLER ANTILOCK BRAKE
(8W-35-2)
MTC
ATC

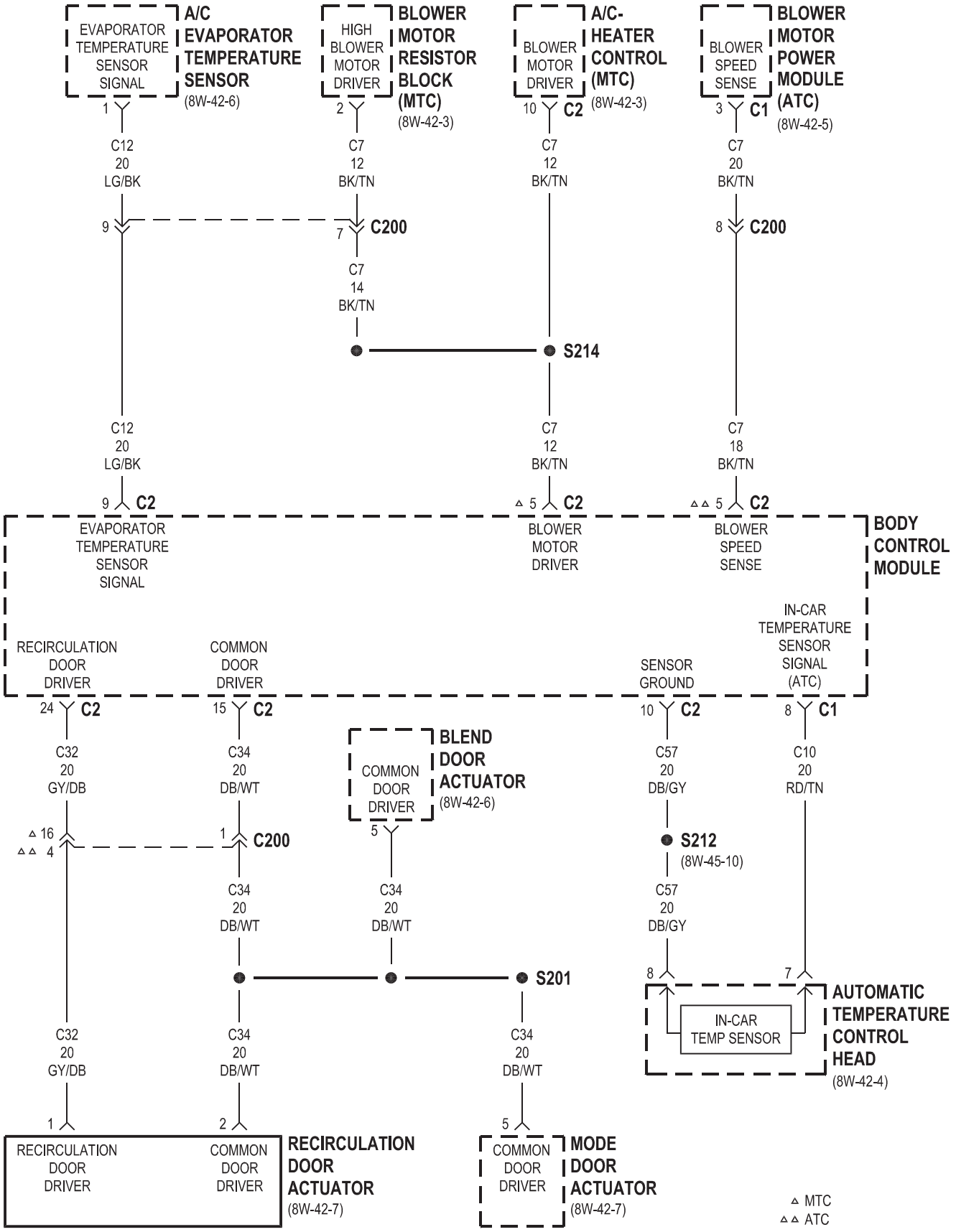
EVAPORATOR TEMPERATURE SENSOR SIGNAL
A/C EVAPORATOR TEMPERATURE SENSOR
(8W-42-6)
HIGH BLOWER MOTOR DRIVER
BLOWER MOTOR RESISTOR BLOCK (MTC)
(8W-42-3)
BLOWER MOTOR DRIVER
A/C-HEATER CONTROL (MTC)
(8W-42-3)
BLOWER SPEED SENSE
BLOWER MOTOR POWER MODULE (ATC)
(8W-42-5)
1
C12
20
LG/BK
2
C7
12
BK/TN
10
C2
C7
12
BK/TN
3
C1
C7
20
BK/TN
9
7
C200
8
C200
C7
14
BK/TN
S214
C12
20
LG/BK
C7
12
BK/TN
C7
18
BK/TN
9
C2
5
C2
5
C2
EVAPORATOR TEMPERATURE SENSOR SIGNAL
BLOWER MOTOR DRIVER
BLOWER SPEED SENSE
BODY CONTROL MODULE
RECIRCULATION DOOR DRIVER
COMMON DOOR DRIVER
SENSOR GROUND
IN-CAR TEMPERATURE SENSOR SIGNAL (ATC)
24
C2
15
C2
10
C2
8
C1
C32
20
GY/DB
C34
20
DB/WT
COMMON DOOR DRIVER
BLEND DOOR ACTUATOR
(8W-42-6)
C57
20
DB/GY
C10
20
RD/TN
16
4
1
C200
5
S212
(8W-45-10)
C34
20
DB/WT
C34
20
DB/WT
C57
20
DB/GY
S201
8
7
IN-CAR TEMP SENSOR
AUTOMATIC TEMPERATURE CONTROL HEAD
(8W-42-4)
C32
20
GY/DB
C34
20
DB/WT
C34
20
DB/WT
1
2
5
RECIRCULATION DOOR DRIVER
COMMON DOOR DRIVER
RECIRCULATION DOOR ACTUATOR
(8W-42-7)
COMMON DOOR DRIVER
MODE DOOR ACTUATOR
(8W-42-7)
MTC
ATC

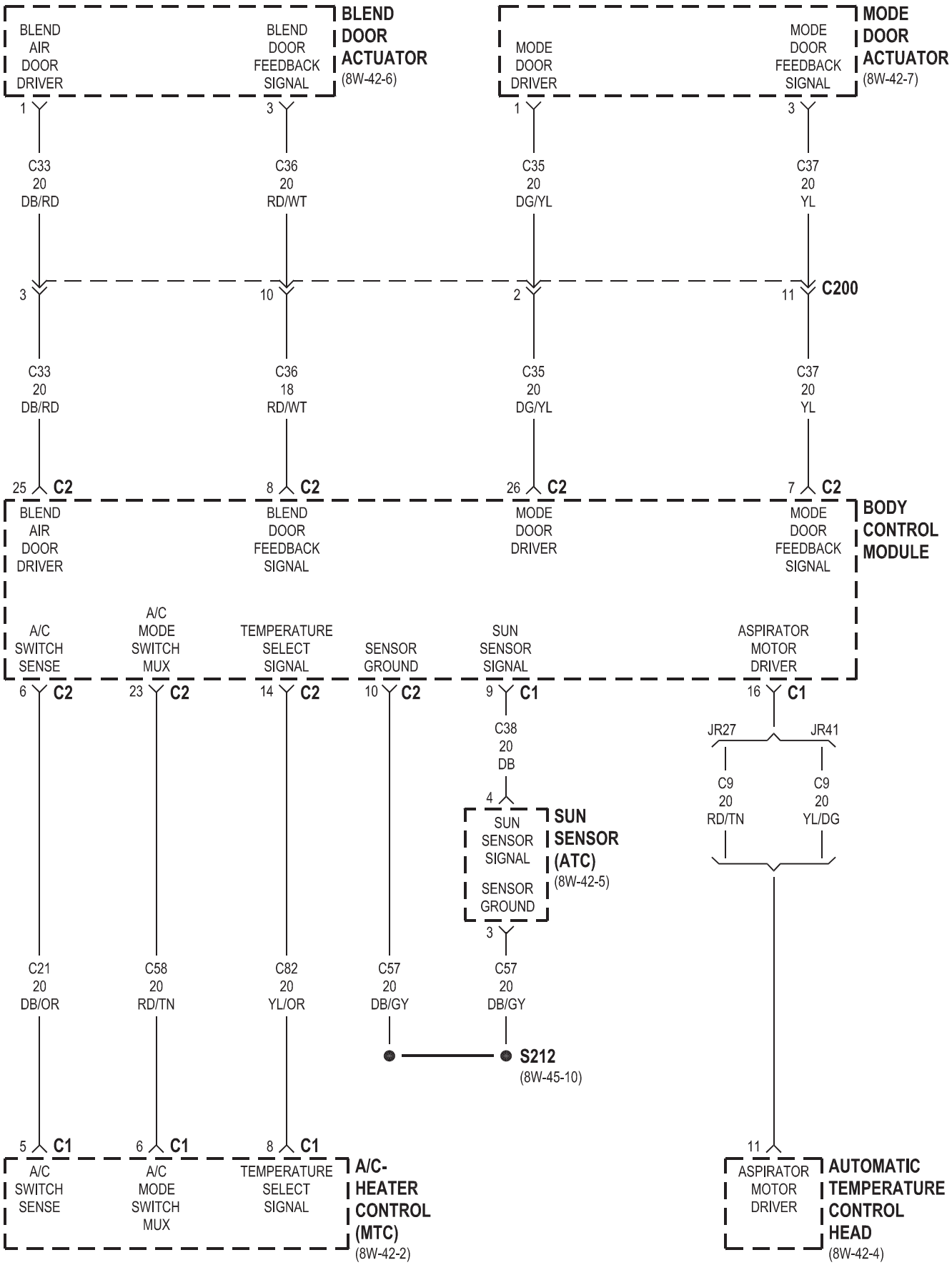
BLEND DOOR ACTUATOR (8W-42-6)
BLEND AIR DOOR DRIVER
BLEND DOOR FEEDBACK SIGNAL
MODE DOOR ACTUATOR (8W-42-7)
MODE DOOR DRIVER
MODE DOOR FEEDBACK SIGNAL
1
3
C33 20 DB/RD
C36 20 RD/WT
C35 20 DG/YL
C37 20 YL
3
10
2
11
C200
C33 20 DB/RD
C36 18 RD/WT
C35 20 DG/YL
C37 20 YL
25 C2
8 C2
26 C2
7 C2
BODY CONTROL MODULE
BLEND AIR DOOR DRIVER
BLEND DOOR FEEDBACK SIGNAL
MODE DOOR DRIVER
MODE DOOR FEEDBACK SIGNAL
A/C SWITCH SENSE
A/C MODE SWITCH MUX
TEMPERATURE SELECT SIGNAL
SENSOR GROUND
SUN SENSOR SIGNAL
ASPIRATOR MOTOR DRIVER
6 C2
23 C2
14 C2
10 C2
9 C1
16 C1
C38 20 DB
4
SUN SENSOR SIGNAL
SENSOR GROUND
SUN SENSOR (ATC) (8W-42-5)
3
JR27
JR41
C9 20 RD/TN
C9 20 YL/DG
C21 20 DB/OR
C58 20 RD/TN
C82 20 YL/OR
C57 20 DB/GY
C57 20 DB/GY
S212 (8W-45-10)
5 C1
6 C1
8 C1
A/C SWITCH SENSE
A/C MODE SWITCH MUX
TEMPERATURE SELECT SIGNAL
A/C-HEATER CONTROL (MTC) (8W-42-2)
11
ASPIRATOR MOTOR DRIVER
AUTOMATIC TEMPERATURE CONTROL HEAD (8W-42-4)

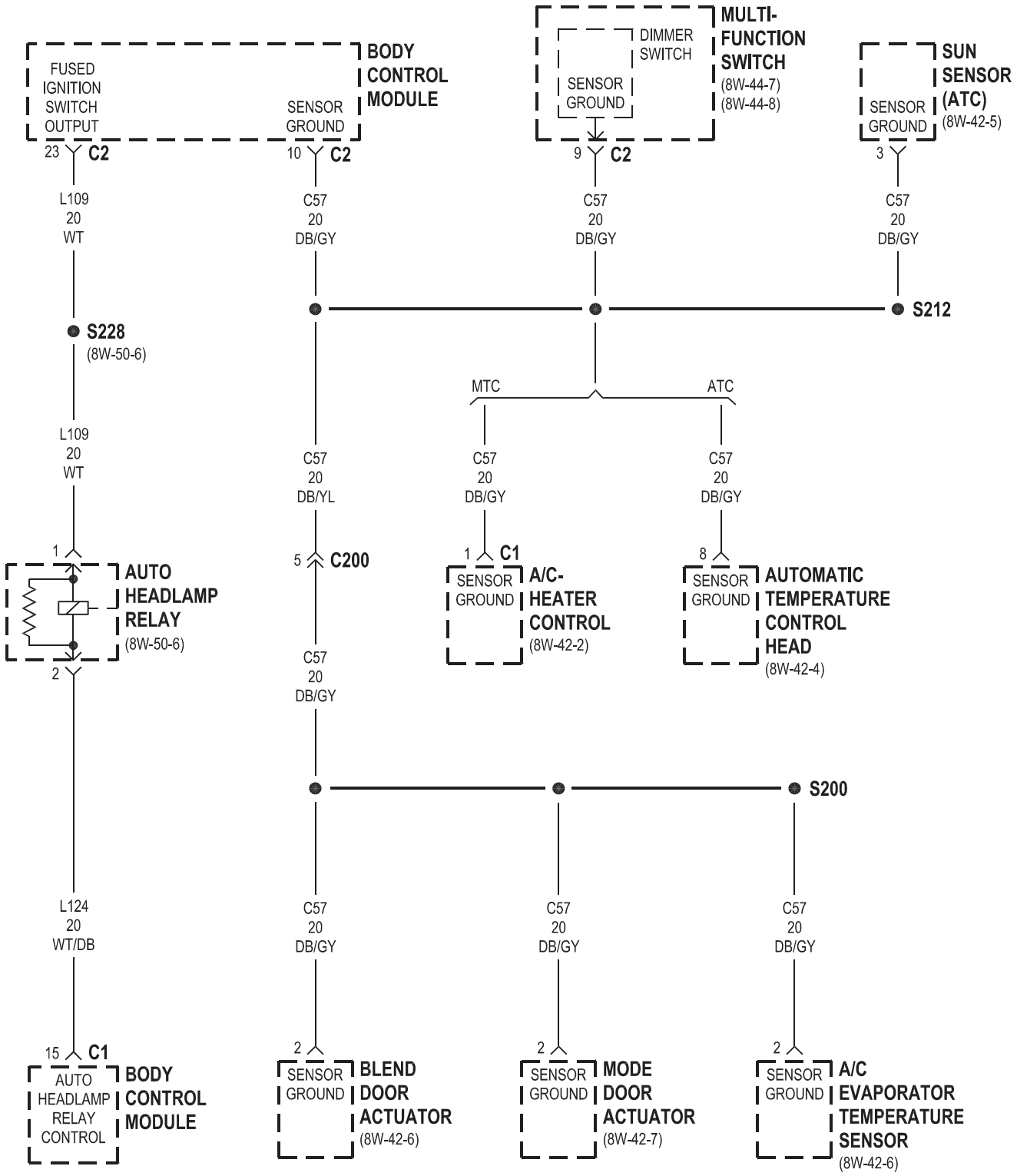
BODY CONTROL MODULE
FUSED IGNITION SWITCH OUTPUT
SENSOR GROUND
23 C2
10 C2
L109 20 WT
C57 20 DB/GY
MULTI-FUNCTION SWITCH
(8W-44-7)
(8W-44-8)
DIMMER SWITCH
SENSOR GROUND
9 C2
SUN SENSOR (ATC)
(8W-42-5)
SENSOR GROUND
3
S212
S228
(8W-50-6)
MTC
ATC
C57 20 DB/YL
1 C1
5 C200
AUTO HEADLAMP RELAY
(8W-50-6)
A/C-HEATER CONTROL
(8W-42-2)
AUTOMATIC TEMPERATURE CONTROL HEAD
(8W-42-4)
S200
L124 20 WT/DB
15 C1
AUTO HEADLAMP RELAY CONTROL
BLEND DOOR ACTUATOR
(8W-42-6)
MODE DOOR ACTUATOR
(8W-42-7)
A/C EVAPORATOR TEMPERATURE SENSOR
(8W-42-6)

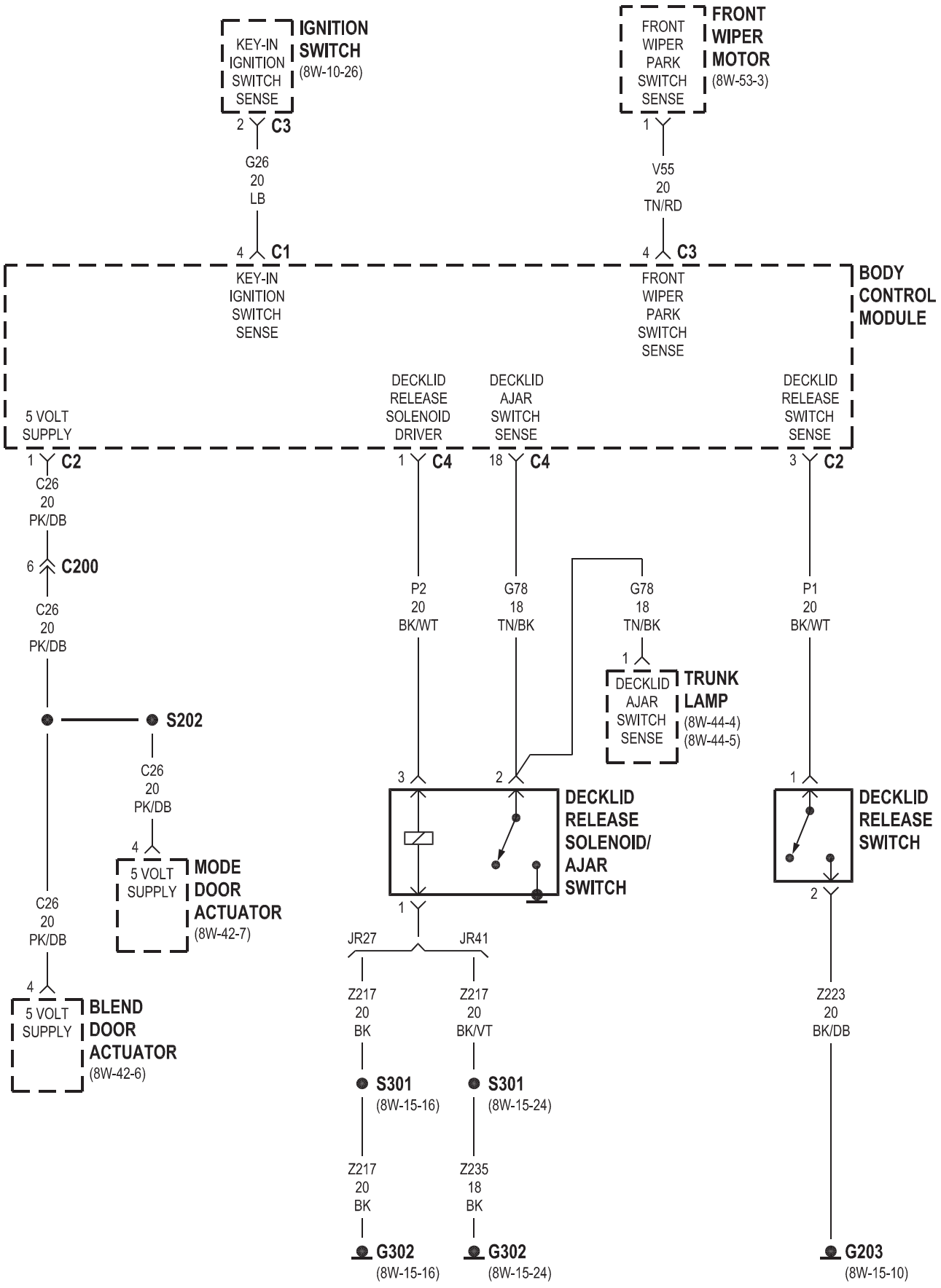
KEY-IN IGNITION SWITCH SENSE
IGNITION SWITCH
(8W-10-26)
2 C3
G26
20
LB
4 C1
FRONT WIPER PARK SWITCH SENSE
FRONT WIPER MOTOR
(8W-53-3)
1
V55
20
TN/RD
4 C3
BODY CONTROL MODULE
KEY-IN IGNITION SWITCH SENSE
FRONT WIPER PARK SWITCH SENSE
5 VOLT SUPPLY
DECKLID RELEASE SOLENOID DRIVER
DECKLID AJAR SWITCH SENSE
DECKLID RELEASE SWITCH SENSE
1 C2
1 C4
18 C4
3 C2
C26
20
PK/DB
6 C200
C26
20
PK/DB
P2
20
BK/WT
G78
18
TN/BK
G78
18
TN/BK
P1
20
BK/WT
1
DECKLID AJAR SWITCH SENSE
TRUNK LAMP
(8W-44-4)
(8W-44-5)
S202
C26
20
PK/DB
4
5 VOLT SUPPLY
MODE DOOR ACTUATOR
(8W-42-7)
3
2
DECKLID RELEASE SOLENOID/ AJAR SWITCH
1
DECKLID RELEASE SWITCH
2
C26
20
PK/DB
4
5 VOLT SUPPLY
BLEND DOOR ACTUATOR
(8W-42-6)
JR27
JR41
Z217
20
BK
Z217
20
BK/VT
Z223
20
BK/DB
S301
(8W-15-16)
S301
(8W-15-24)
Z217
20
BK
Z235
18
BK
G302
(8W-15-16)
G302
(8W-15-24)
G203
(8W-15-10)

JR41 EXCEPT EXPORT

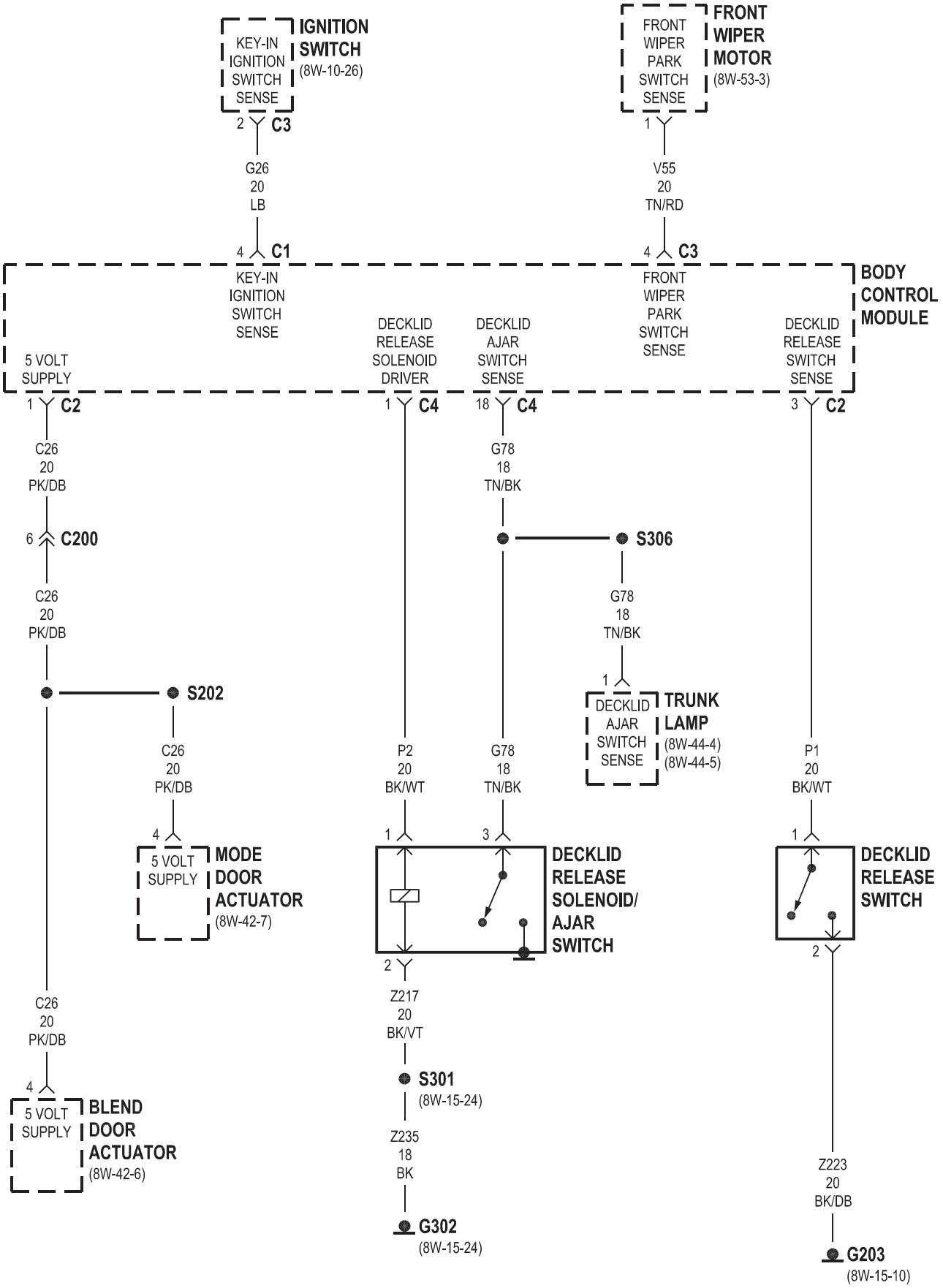

JR41

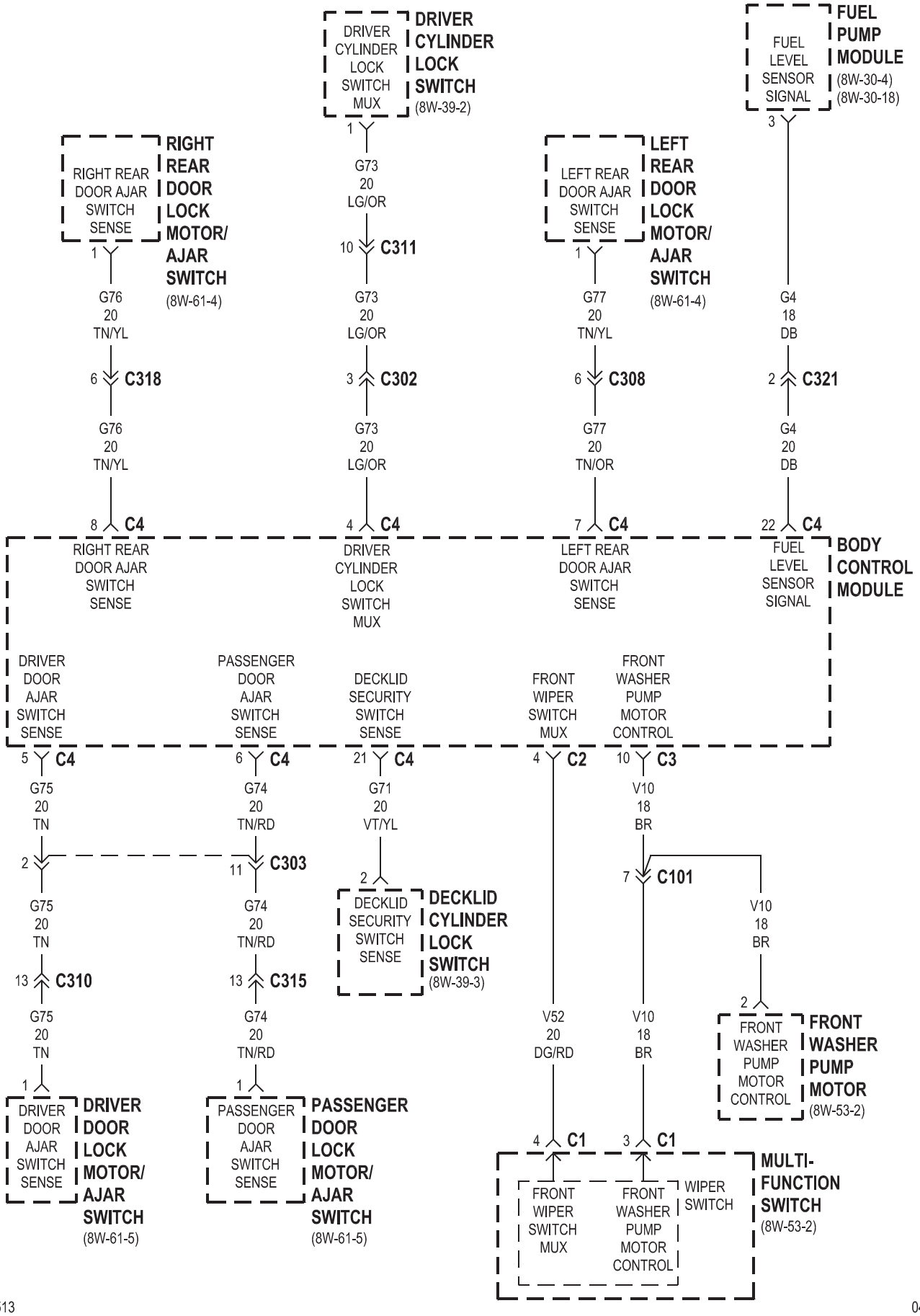
DRIVER CYLINDER LOCK SWITCH MUX
DRIVER CYLINDER LOCK SWITCH
(8W-39-2)
FUEL LEVEL SENSOR SIGNAL
FUEL PUMP MODULE
(8W-30-4)
(8W-30-18)
RIGHT REAR DOOR AJAR SWITCH SENSE
RIGHT REAR DOOR LOCK MOTOR/ AJAR SWITCH
(8W-61-4)
LEFT REAR DOOR AJAR SWITCH SENSE
LEFT REAR DOOR LOCK MOTOR/ AJAR SWITCH
(8W-61-4)
1
3
G73
20
LG/OR
10 C311
G73
20
LG/OR
3 C302
G73
20
LG/OR
4 C4
1
G76
20
TN/YL
6 C318
G76
20
TN/YL
8 C4
1
G77
20
TN/YL
6 C308
G77
20
TN/OR
7 C4
G4
18
DB
2 C321
G4
20
DB
22 C4
RIGHT REAR DOOR AJAR SWITCH SENSE
DRIVER CYLINDER LOCK SWITCH MUX
LEFT REAR DOOR AJAR SWITCH SENSE
FUEL LEVEL SENSOR SIGNAL
BODY CONTROL MODULE
DRIVER DOOR AJAR SWITCH SENSE
PASSENGER DOOR AJAR SWITCH SENSE
DECKLID SECURITY SWITCH SENSE
FRONT WIPER SWITCH MUX
FRONT WASHER PUMP MOTOR CONTROL
5 C4
6 C4
21 C4
4 C2
10 C3
G75
20
TN
G74
20
TN/RD
G71
20
VT/YL
V10
18
BR
2
11 C303
2
7 C101
G75
20
TN
G74
20
TN/RD
DECKLID SECURITY SWITCH SENSE
DECKLID CYLINDER LOCK SWITCH
(8W-39-3)
V10
18
BR
13 C310
13 C315
V52
20
DG/RD
V10
18
BR
2
FRONT WASHER PUMP MOTOR CONTROL
FRONT WASHER PUMP MOTOR
(8W-53-2)
G75
20
TN
G74
20
TN/RD
1
1
DRIVER DOOR AJAR SWITCH SENSE
DRIVER DOOR LOCK MOTOR/ AJAR SWITCH
(8W-61-5)
PASSENGER DOOR AJAR SWITCH SENSE
PASSENGER DOOR LOCK MOTOR/ AJAR SWITCH
(8W-61-5)
4 C1
3 C1
FRONT WIPER SWITCH MUX
FRONT WASHER PUMP MOTOR CONTROL
WIPER SWITCH
MULTI-FUNCTION SWITCH
(8W-53-2)

JR41

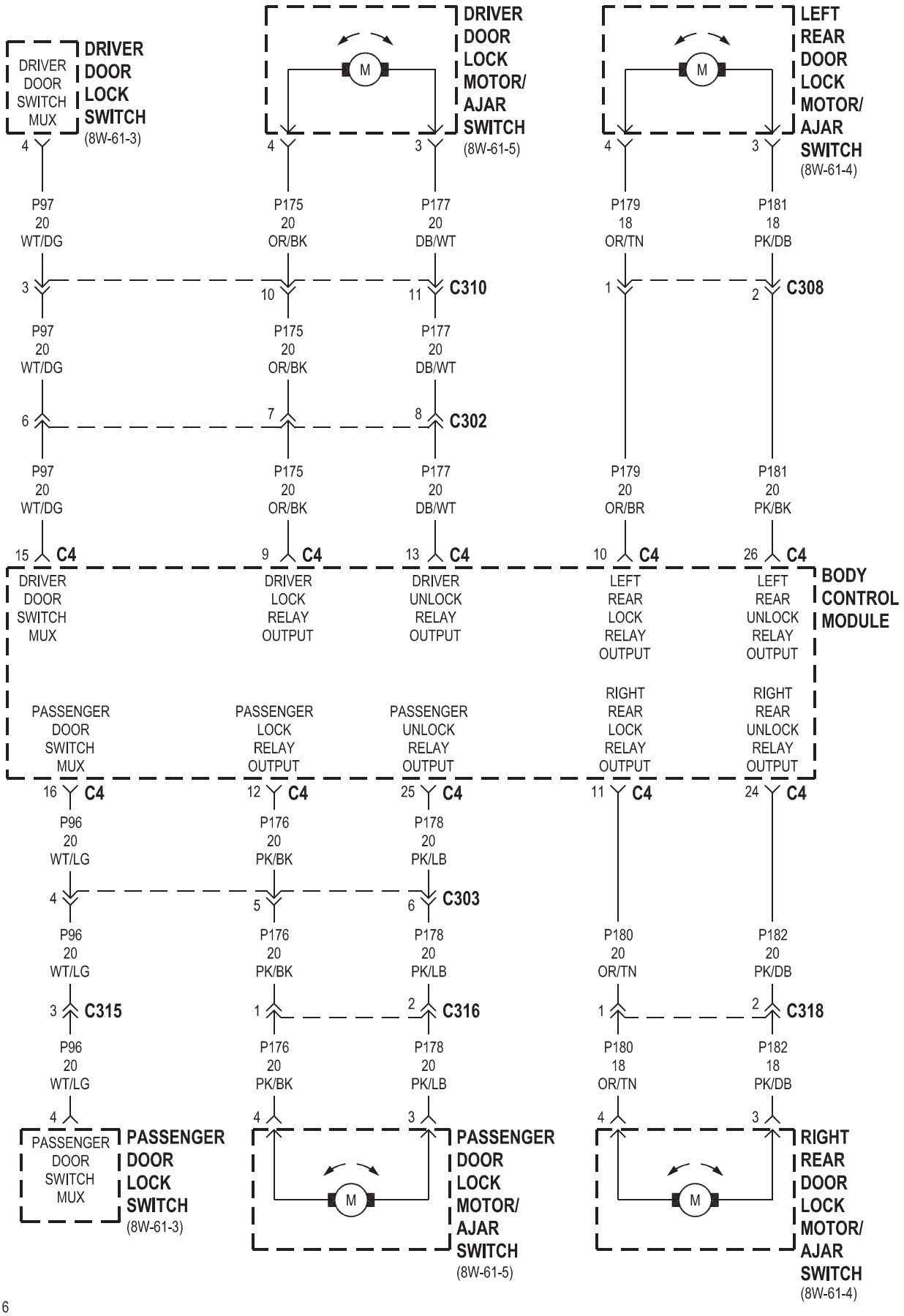
DRIVER DOOR SWITCH MUX
DRIVER DOOR LOCK SWITCH
(8W-61-3)
DRIVER DOOR LOCK MOTOR/ AJAR SWITCH
(8W-61-5)
LEFT REAR DOOR LOCK MOTOR/ AJAR SWITCH
(8W-61-4)
P97 20 WT/DG
P175 20 OR/BK
P177 20 DB/WT
P179 18 OR/TN
P181 18 PK/DB
C310
C308
C302
P179 20 OR/BR
P181 20 PK/BK
C4
DRIVER DOOR SWITCH MUX
DRIVER LOCK RELAY OUTPUT
DRIVER UNLOCK RELAY OUTPUT
LEFT REAR LOCK RELAY OUTPUT
LEFT REAR UNLOCK RELAY OUTPUT
BODY CONTROL MODULE
PASSENGER DOOR SWITCH MUX
PASSENGER LOCK RELAY OUTPUT
PASSENGER UNLOCK RELAY OUTPUT
RIGHT REAR LOCK RELAY OUTPUT
RIGHT REAR UNLOCK RELAY OUTPUT
P96 20 WT/LG
P176 20 PK/BK
P178 20 PK/LB
P180 20 OR/TN
P182 20 PK/DB
C303
C315
C316
C318
P180 18 OR/TN
P182 18 PK/DB
PASSENGER DOOR SWITCH MUX
PASSENGER DOOR LOCK SWITCH
(8W-61-3)
PASSENGER DOOR LOCK MOTOR/ AJAR SWITCH
(8W-61-5)
RIGHT REAR DOOR LOCK MOTOR/ AJAR SWITCH
(8W-61-4)

JR27

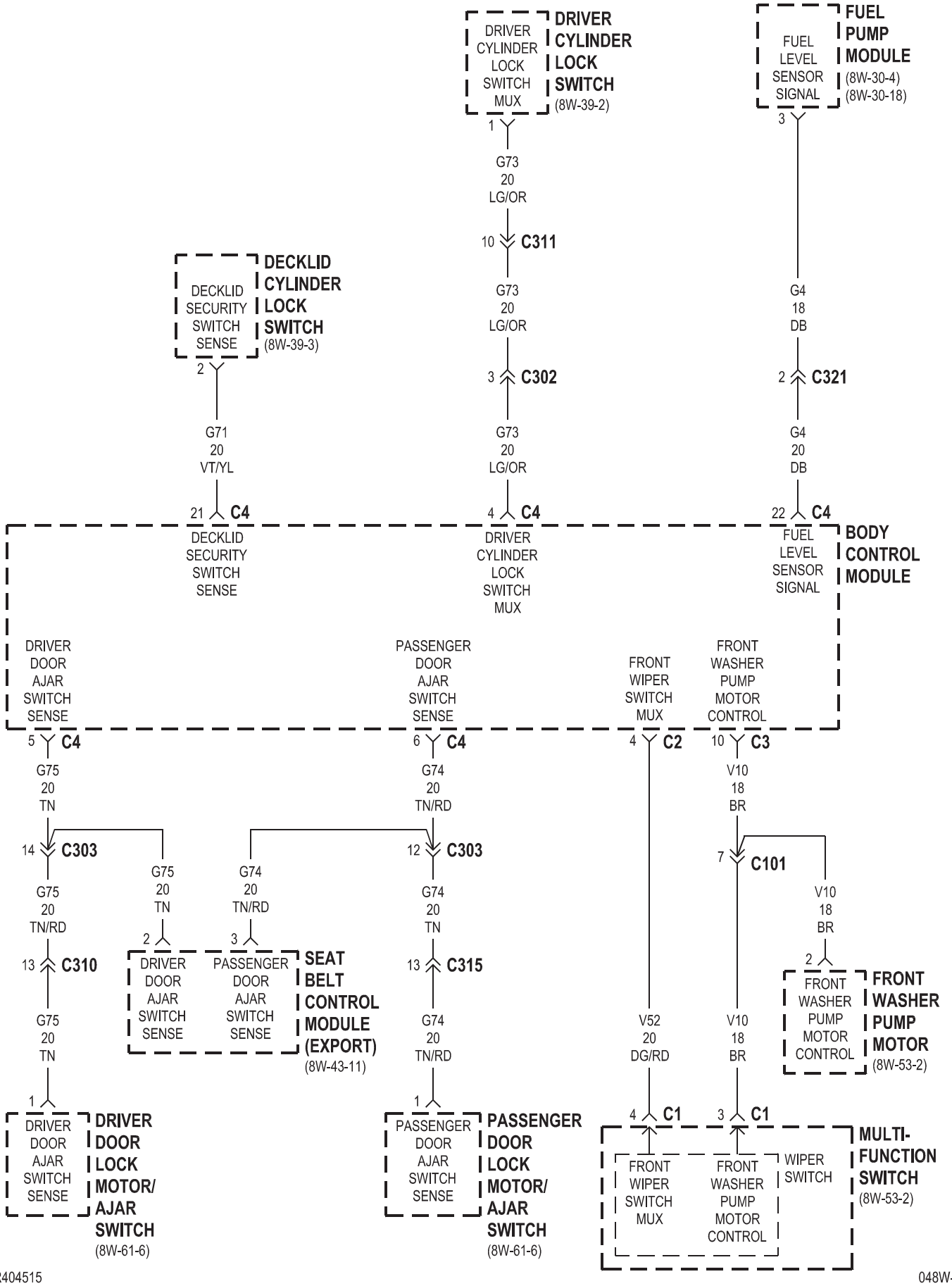
DRIVER CYLINDER LOCK SWITCH MUX
DRIVER CYLINDER LOCK SWITCH
(8W-39-2)
FUEL LEVEL SENSOR SIGNAL
FUEL PUMP MODULE
(8W-30-4)
(8W-30-18)
1
G73
20
LG/OR
10 C311
G73
20
LG/OR
3 C302
G73
20
LG/OR
4 C4
DRIVER CYLINDER LOCK SWITCH MUX
3
G4
18
DB
2 C321
G4
20
DB
22 C4
FUEL LEVEL SENSOR SIGNAL
DECKLID SECURITY SWITCH SENSE
DECKLID CYLINDER LOCK SWITCH
(8W-39-3)
2
G71
20
VT/YL
21 C4
DECKLID SECURITY SWITCH SENSE
BODY CONTROL MODULE
DRIVER DOOR AJAR SWITCH SENSE
PASSENGER DOOR AJAR SWITCH SENSE
FRONT WIPER SWITCH MUX
FRONT WASHER PUMP MOTOR CONTROL
5 C4
G75
20
TN
6 C4
G74
20
TN/RD
4 C2
10 C3
V10
18
BR
14 C303
G75
20
TN/RD
G75
20
TN
G74
20
TN/RD
12 C303
G74
20
TN
7 C101
V10
18
BR
13 C310
G75
20
TN
2
DRIVER DOOR AJAR SWITCH SENSE
3
PASSENGER DOOR AJAR SWITCH SENSE
SEAT BELT CONTROL MODULE (EXPORT)
(8W-43-11)
13 C315
G74
20
TN/RD
V52
20
DG/RD
V10
18
BR
2
FRONT WASHER PUMP MOTOR CONTROL
FRONT WASHER PUMP MOTOR
(8W-53-2)
1
DRIVER DOOR AJAR SWITCH SENSE
DRIVER DOOR LOCK MOTOR/ AJAR SWITCH
(8W-61-6)
1
PASSENGER DOOR AJAR SWITCH SENSE
PASSENGER DOOR LOCK MOTOR/ AJAR SWITCH
(8W-61-6)
4 C1
3 C1
FRONT WIPER SWITCH MUX
FRONT WASHER PUMP MOTOR CONTROL
WIPER SWITCH
MULTI-FUNCTION SWITCH
(8W-53-2)

JR27

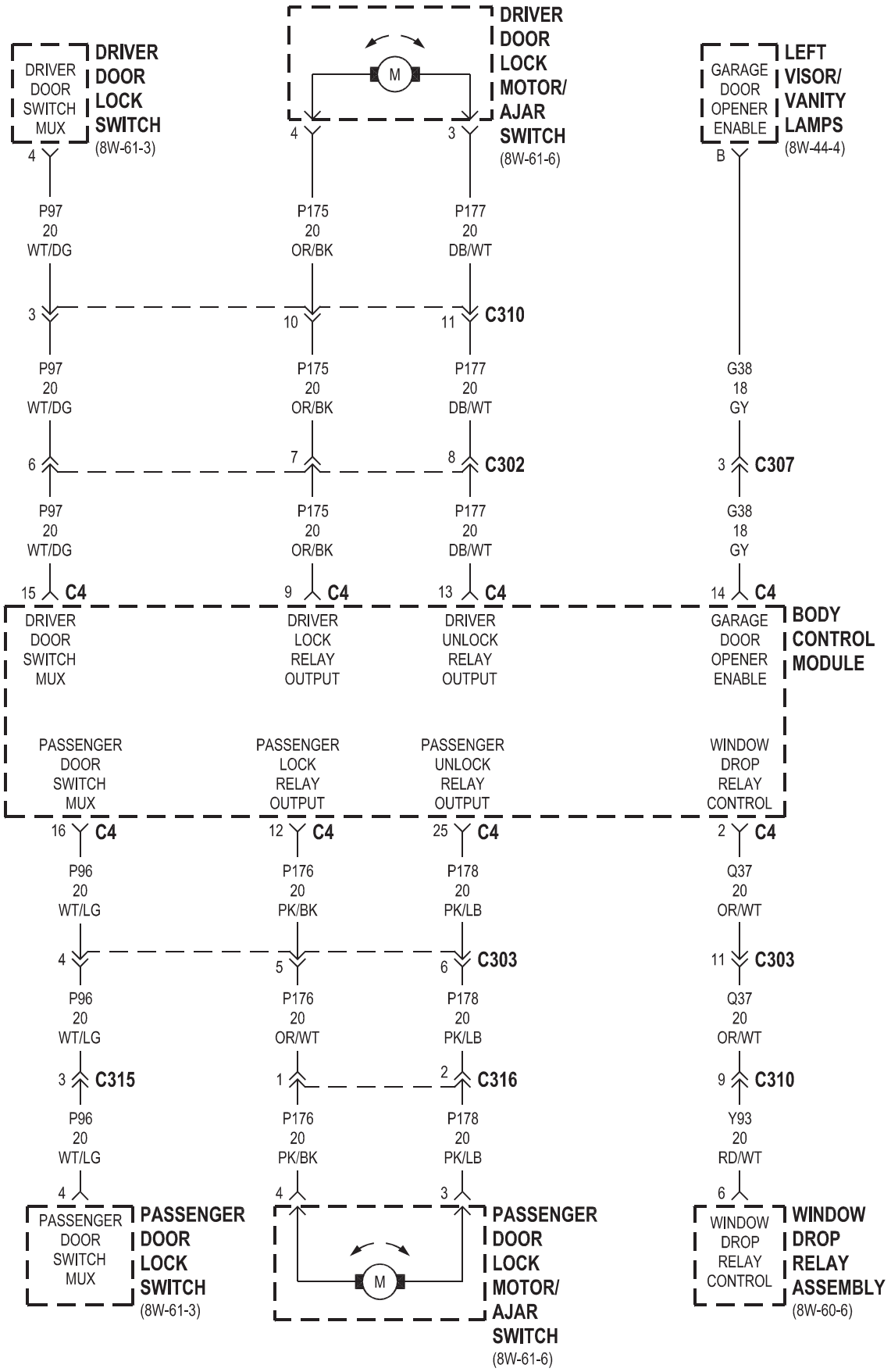
DRIVER DOOR SWITCH MUX
DRIVER DOOR LOCK SWITCH
(8W-61-3)
DRIVER DOOR LOCK MOTOR/ AJAR SWITCH
(8W-61-6)
GARAGE DOOR OPENER ENABLE
LEFT VISOR/ VANITY LAMPS
(8W-44-4)
4
4
3
B
P97 20 WT/DG
P175 20 OR/BK
P177 20 DB/WT
3
10
11
C310
P97 20 WT/DG
P175 20 OR/BK
P177 20 DB/WT
G38 18 GY
6
7
8
C302
3
C307
P97 20 WT/DG
P175 20 OR/BK
P177 20 DB/WT
G38 18 GY
15
C4
9
C4
13
C4
14
C4
DRIVER DOOR SWITCH MUX
DRIVER LOCK RELAY OUTPUT
DRIVER UNLOCK RELAY OUTPUT
GARAGE DOOR OPENER ENABLE
BODY CONTROL MODULE
PASSENGER DOOR SWITCH MUX
PASSENGER LOCK RELAY OUTPUT
PASSENGER UNLOCK RELAY OUTPUT
WINDOW DROP RELAY CONTROL
16
C4
12
C4
25
C4
2
C4
P96 20 WT/LG
P176 20 PK/BK
P178 20 PK/LB
Q37 20 OR/WT
4
5
6
C303
11
C303
P96 20 WT/LG
P176 20 OR/WT
P178 20 PK/LB
Q37 20 OR/WT
3
C315
1
2
C316
9
C310
P96 20 WT/LG
P176 20 PK/BK
P178 20 PK/LB
Y93 20 RD/WT
4
4
3
6
PASSENGER DOOR SWITCH MUX
PASSENGER DOOR LOCK SWITCH
(8W-61-3)
M
PASSENGER DOOR LOCK MOTOR/ AJAR SWITCH
(8W-61-6)
WINDOW DROP RELAY CONTROL
WINDOW DROP RELAY ASSEMBLY
(8W-60-6)

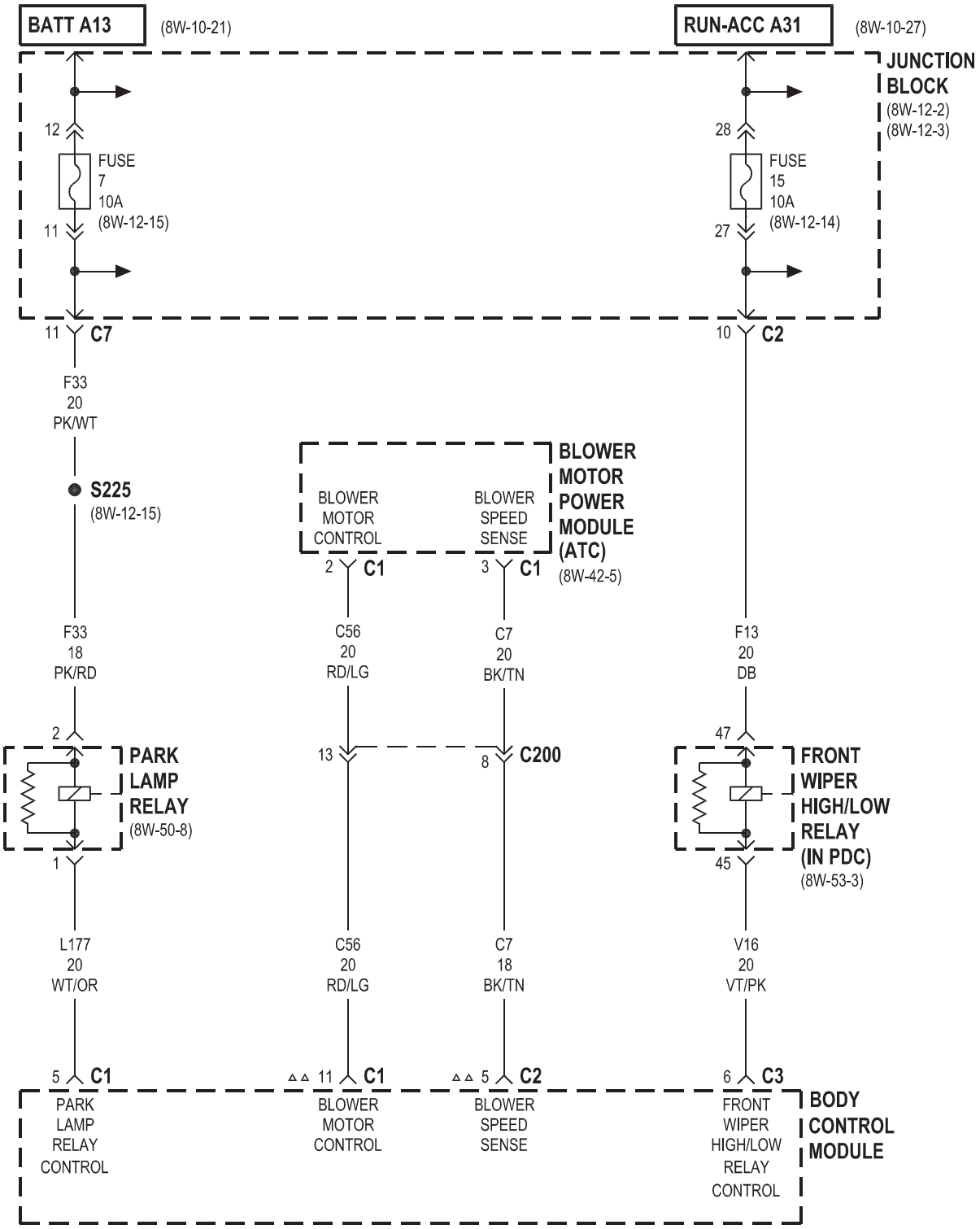
BATT A13
(8W-10-21)
RUN-ACC A31
(8W-10-27)
JUNCTION BLOCK
(8W-12-2)
(8W-12-3)
12
FUSE 7 10A
(8W-12-15)
11
28
FUSE 15 10A
(8W-12-14)
27
11 C7
10 C2
F33 20 PK/WT
S225
(8W-12-15)
BLOWER MOTOR CONTROL
BLOWER SPEED SENSE
BLOWER MOTOR POWER MODULE (ATC)
(8W-42-5)
2 C1
3 C1
F33 18 PK/RD
C56 20 RD/LG
C7 20 BK/TN
F13 20 DB
2
13
8 C200
47
PARK LAMP RELAY
(8W-50-8)
FRONT WIPER HIGH/LOW RELAY (IN PDC)
(8W-53-3)
1
45
L177 20 WT/OR
C56 20 RD/LG
C7 18 BK/TN
V16 20 VT/PK
5 C1
△△ 11 C1
△△ 5 C2
6 C3
PARK LAMP RELAY CONTROL
BLOWER MOTOR CONTROL
BLOWER SPEED SENSE
FRONT WIPER HIGH/LOW RELAY CONTROL
BODY CONTROL MODULE

△△ ATC

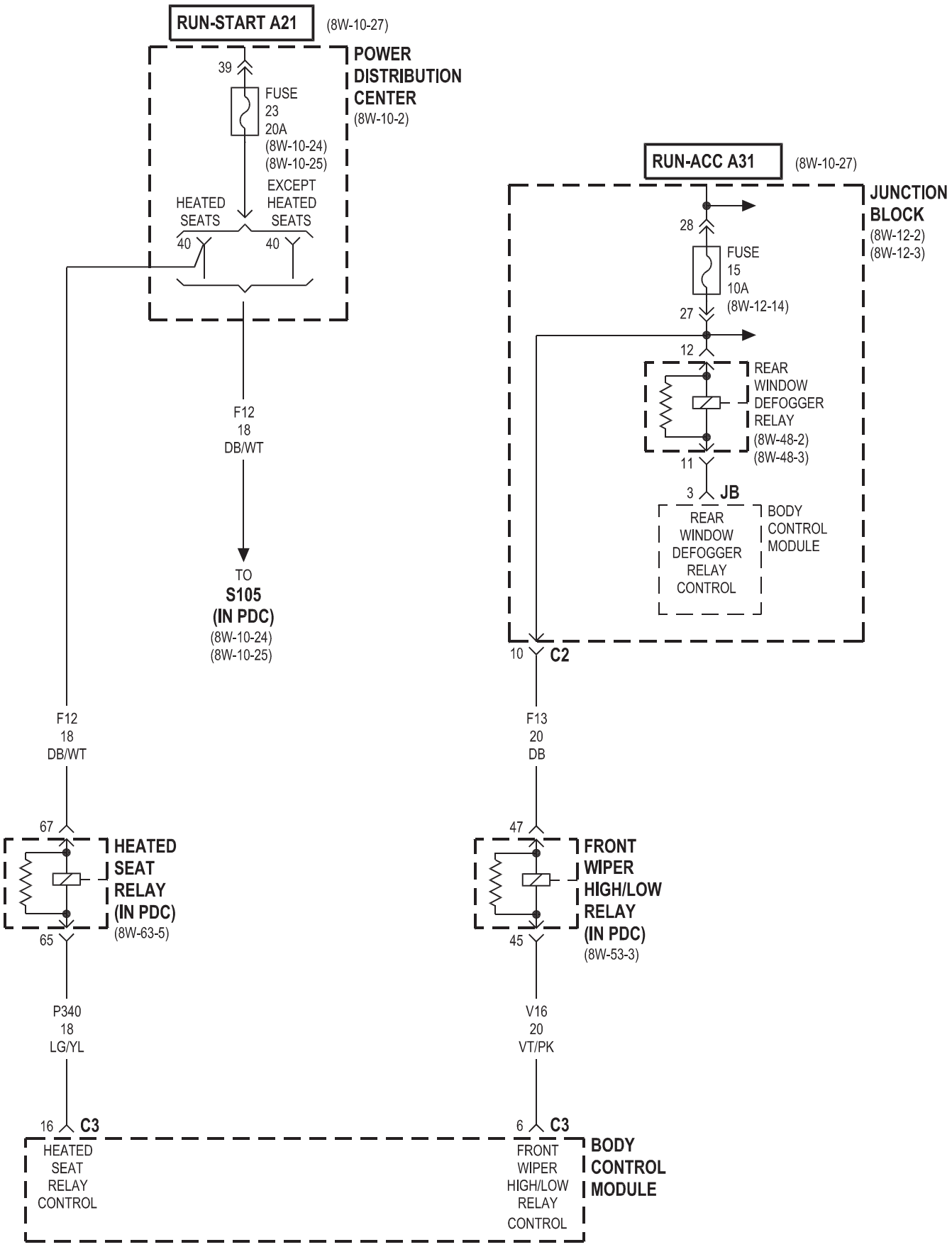
RUN-START A21
(8W-10-27)
POWER DISTRIBUTION CENTER
(8W-10-2)
39
FUSE 23 20A
(8W-10-24)
(8W-10-25)
HEATED SEATS
EXCEPT HEATED SEATS
40
40
F12 18 DB/WT
TO S105 (IN PDC)
(8W-10-24)
(8W-10-25)
RUN-ACC A31
(8W-10-27)
JUNCTION BLOCK
(8W-12-2)
(8W-12-3)
28
FUSE 15 10A
(8W-12-14)
27
12
REAR WINDOW DEFOGGER RELAY
(8W-48-2)
(8W-48-3)
11
3
JB
REAR WINDOW DEFOGGER RELAY CONTROL
BODY CONTROL MODULE
10
C2
F12 18 DB/WT
F13 20 DB
67
HEATED SEAT RELAY (IN PDC)
(8W-63-5)
65
47
FRONT WIPER HIGH/LOW RELAY (IN PDC)
(8W-53-3)
45
P340 18 LG/YL
V16 20 VT/PK
16
C3
6
C3
HEATED SEAT RELAY CONTROL
FRONT WIPER HIGH/LOW RELAY CONTROL
BODY CONTROL MODULE

8W-47 AUDIO SYSTEM

Component	Page
Antenna	8W-47-2, 3, 4, 10
Body Control Module	8W-47-2, 11
CD Changer	8W-47-2
Clockspring	8W-47-11
Compass/Mini-Trip Computer	8W-47-2
Fuse 5	8W-47-2, 4, 10
Fuse 8	8W-47-4, 5
Fuse 14	8W-47-2
G203	8W-47-2, 11
G301	8W-47-4, 5
Junction Block	8W-47-2, 4, 5, 10
Left Front Door Speaker	8W-47-3, 8, 9
Left Front Instrument Panel Speaker	8W-47-3, 6, 7
Left Rear Speaker	8W-47-3, 8, 9
Left Remote Radio Switch	8W-47-11
Power Amplifier	8W-47-4, 5, 6, 7, 8, 9, 10
Radio	8W-47-2, 3, 4, 6, 7, 10, 11
Rear Floor Courtesy Lamp	8W-47-4, 10
Right Front Door Speaker	8W-47-3, 8, 9
Right Front Instrument Panel Speaker	8W-47-3, 6, 7
Right Rear Speaker	8W-47-3, 8, 9
Right Remote Radio Switch	8W-47-11

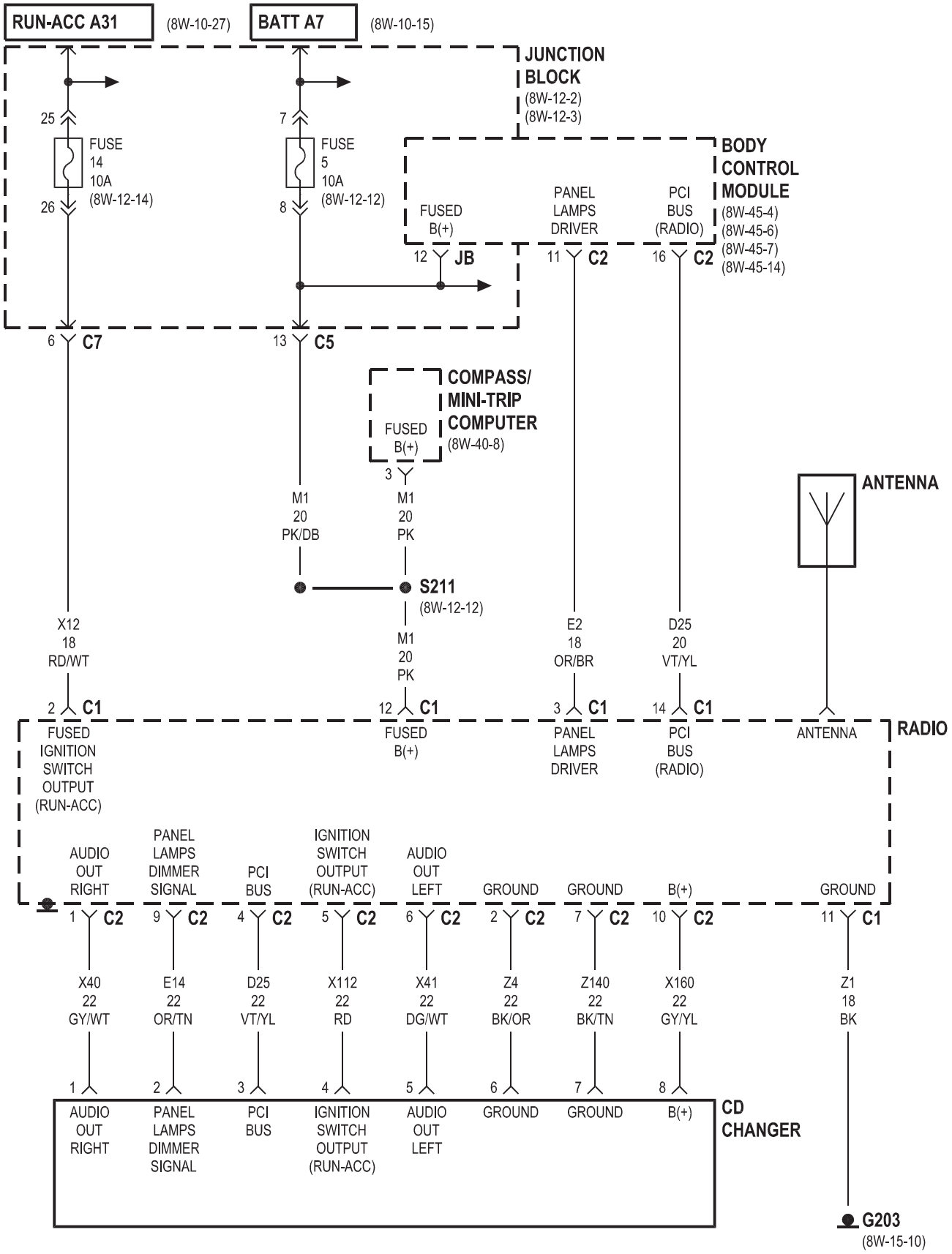
RUN-ACC A31
(8W-10-27)
BATT A7
(8W-10-15)
JUNCTION BLOCK
(8W-12-2)
(8W-12-3)
25
FUSE 14 10A
(8W-12-14)
26
7
FUSE 5 10A
(8W-12-12)
8
BODY CONTROL MODULE
(8W-45-4)
(8W-45-6)
(8W-45-7)
(8W-45-14)
FUSED B(+)
12 JB
PANEL LAMPS DRIVER
11 C2
PCI BUS (RADIO)
16 C2
6 C7
13 C5
COMPASS/ MINI-TRIP COMPUTER
(8W-40-8)
FUSED B(+)
3
M1 20 PK/DB
M1 20 PK
S211
(8W-12-12)
ANTENNA
X12 18 RD/WT
M1 20 PK
E2 18 OR/BR
D25 20 VT/YL
2 C1
12 C1
3 C1
14 C1
RADIO
FUSED IGNITION SWITCH OUTPUT (RUN-ACC)
FUSED B(+)
PANEL LAMPS DRIVER
PCI BUS (RADIO)
ANTENNA
AUDIO OUT RIGHT
PANEL LAMPS DIMMER SIGNAL
PCI BUS
IGNITION SWITCH OUTPUT (RUN-ACC)
AUDIO OUT LEFT
GROUND
GROUND
B(+)
GROUND
1 C2
9 C2
4 C2
5 C2
6 C2
2 C2
7 C2
10 C2
11 C1
X40 22 GY/WT
E14 22 OR/TN
D25 22 VT/YL
X112 22 RD
X41 22 DG/WT
Z4 22 BK/OR
Z140 22 BK/TN
X160 22 GY/YL
Z1 18 BK
1
2
3
4
5
6
7
8
AUDIO OUT RIGHT
PANEL LAMPS DIMMER SIGNAL
PCI BUS
IGNITION SWITCH OUTPUT (RUN-ACC)
AUDIO OUT LEFT
GROUND
GROUND
B(+)
CD CHANGER
G203
(8W-15-10)

BASE

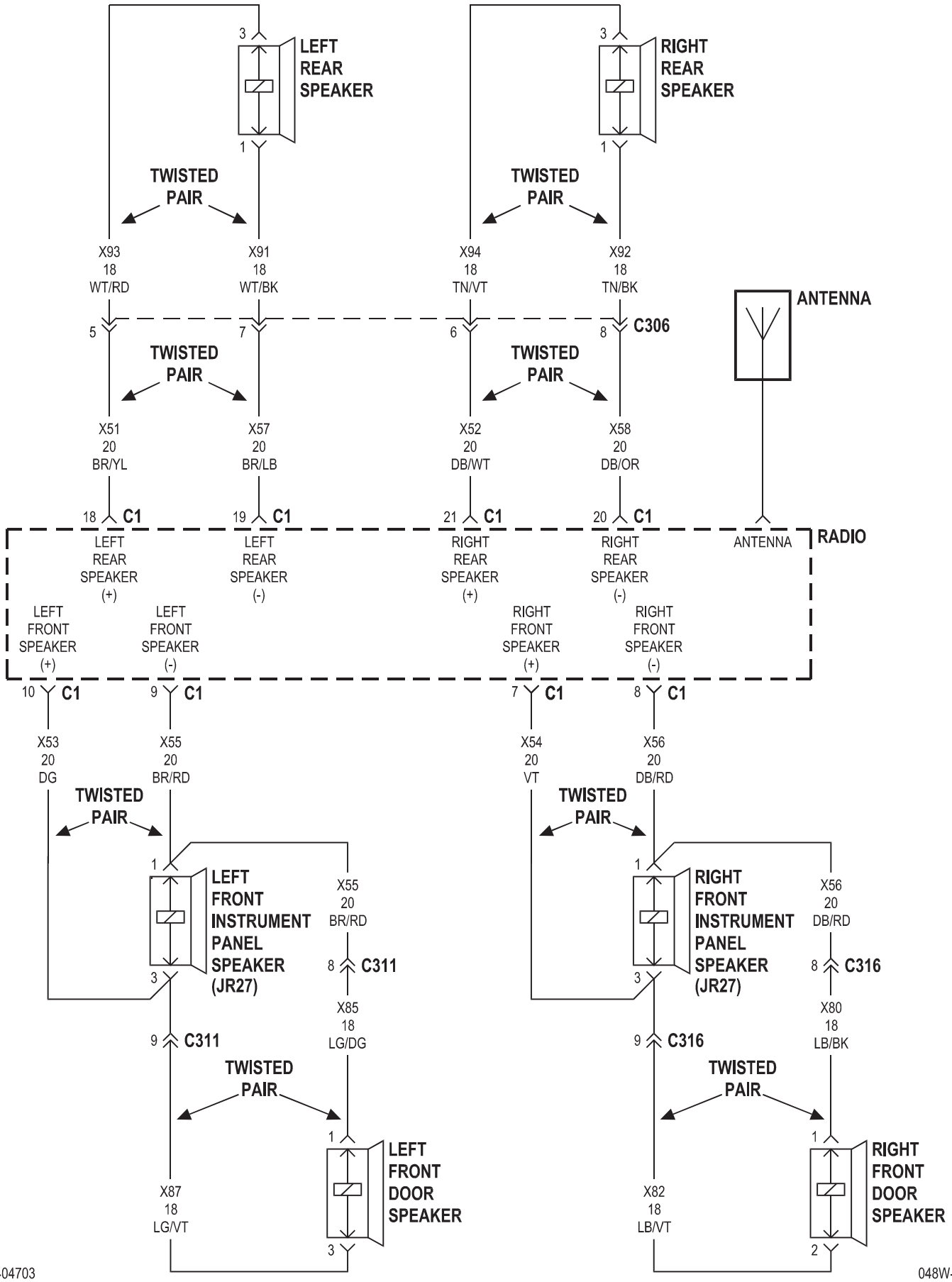

JR404703

048W-16

JR27 PREMIUM

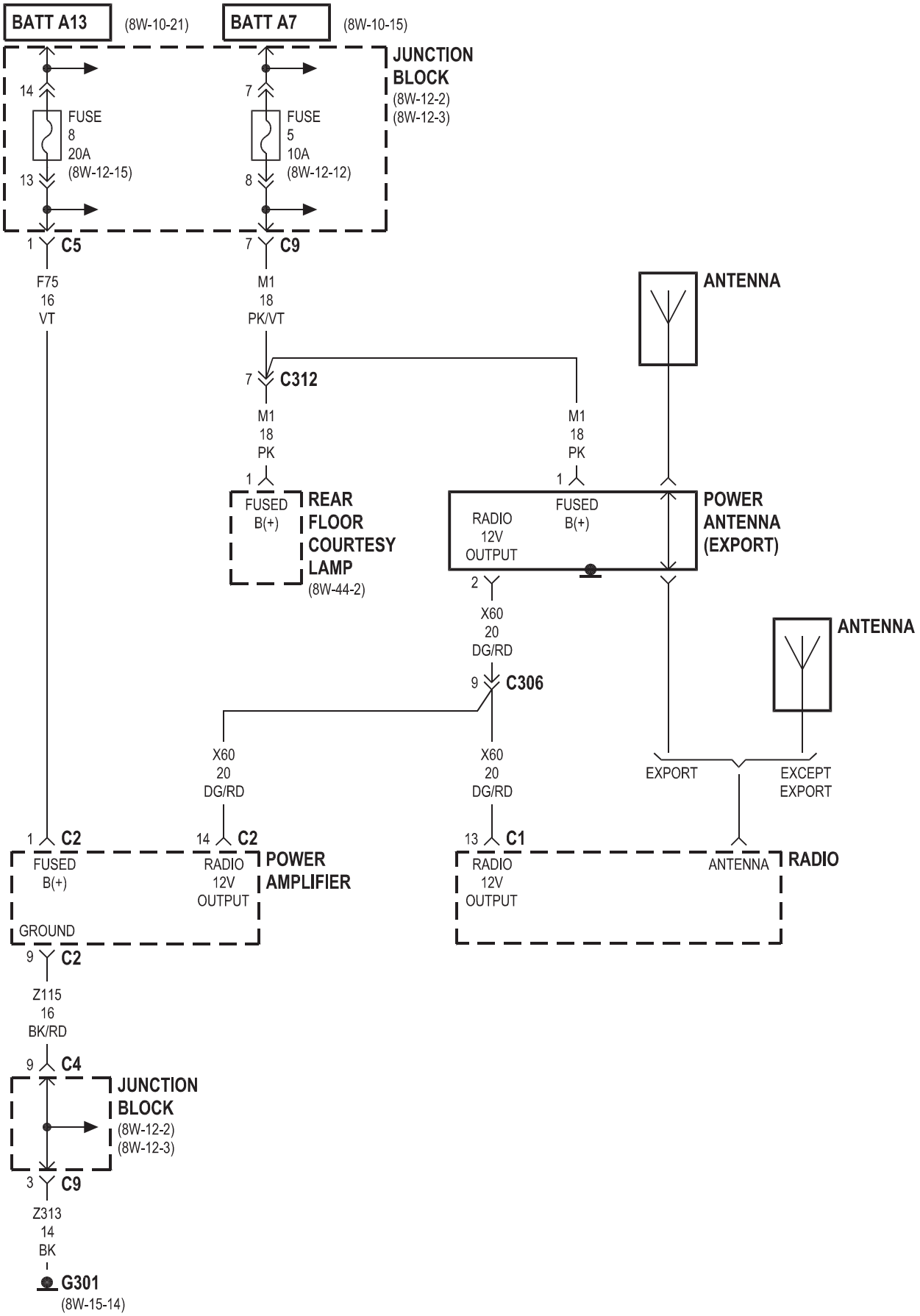

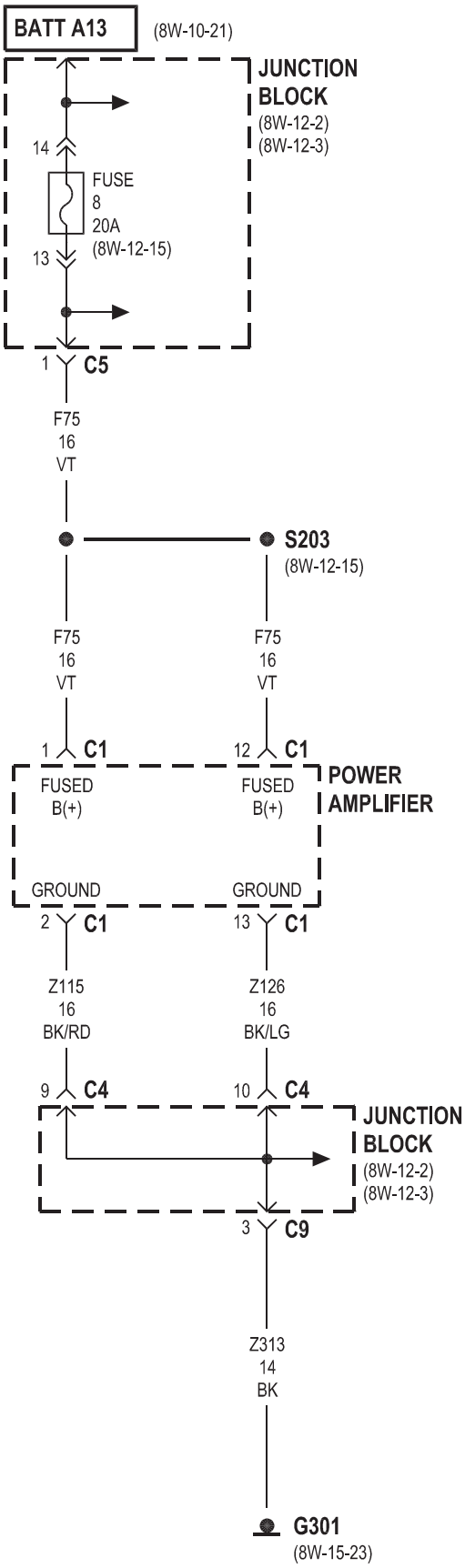
BATT A13
(8W-10-21)
JUNCTION BLOCK
(8W-12-2)
(8W-12-3)
14
FUSE
8
20A
(8W-12-15)
13
1
C5
F75
16
VT
S203
(8W-12-15)
F75
16
VT
F75
16
VT
1
C1
12
C1
FUSED
B(+)
FUSED
B(+)
POWER AMPLIFIER
GROUND
GROUND
2
C1
13
C1
Z115
16
BK/RD
Z126
16
BK/LG
9
C4
10
C4
JUNCTION BLOCK
(8W-12-2)
(8W-12-3)
3
C9
Z313
14
BK
G301
(8W-15-23)

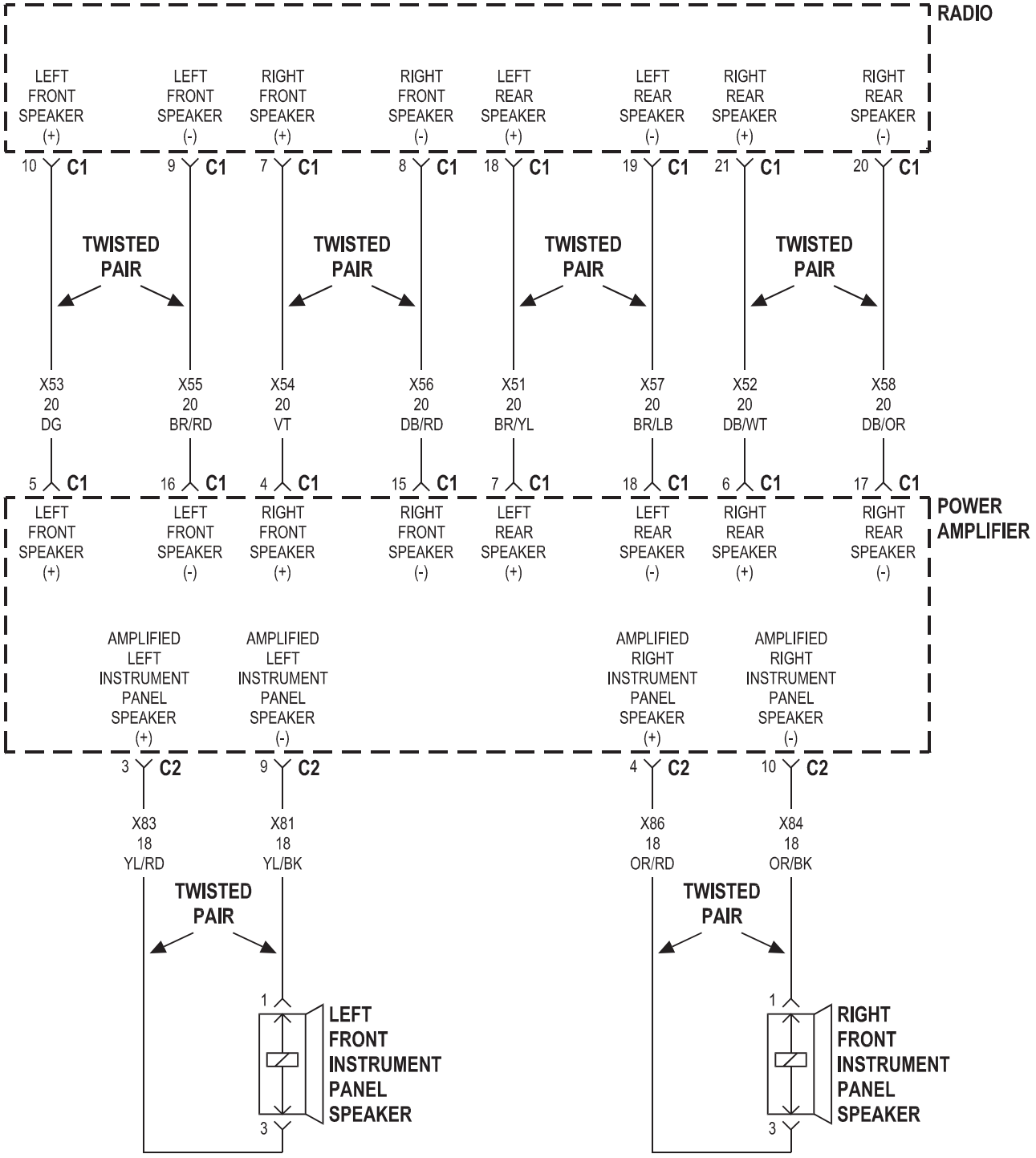
RADIO
LEFT FRONT SPEAKER (+)
LEFT FRONT SPEAKER (-)
RIGHT FRONT SPEAKER (+)
RIGHT FRONT SPEAKER (-)
LEFT REAR SPEAKER (+)
LEFT REAR SPEAKER (-)
RIGHT REAR SPEAKER (+)
RIGHT REAR SPEAKER (-)
10 C1
9 C1
7 C1
8 C1
18 C1
19 C1
21 C1
20 C1
TWISTED PAIR
TWISTED PAIR
TWISTED PAIR
TWISTED PAIR
X53 20 DG
X55 20 BR/RD
X54 20 VT
X56 20 DB/RD
X51 20 BR/YL
X57 20 BR/LB
X52 20 DB/WT
X58 20 DB/OR
5 C1
16 C1
4 C1
15 C1
7 C1
18 C1
6 C1
17 C1
POWER AMPLIFIER
LEFT FRONT SPEAKER (+)
LEFT FRONT SPEAKER (-)
RIGHT FRONT SPEAKER (+)
RIGHT FRONT SPEAKER (-)
LEFT REAR SPEAKER (+)
LEFT REAR SPEAKER (-)
RIGHT REAR SPEAKER (+)
RIGHT REAR SPEAKER (-)
AMPLIFIED LEFT INSTRUMENT PANEL SPEAKER (+)
AMPLIFIED LEFT INSTRUMENT PANEL SPEAKER (-)
AMPLIFIED RIGHT INSTRUMENT PANEL SPEAKER (+)
AMPLIFIED RIGHT INSTRUMENT PANEL SPEAKER (-)
3 C2
9 C2
4 C2
10 C2
X83 18 YL/RD
X81 18 YL/BK
X86 18 OR/RD
X84 18 OR/BK
TWISTED PAIR
TWISTED PAIR
1
3
LEFT FRONT INSTRUMENT PANEL SPEAKER
1
3
RIGHT FRONT INSTRUMENT PANEL SPEAKER

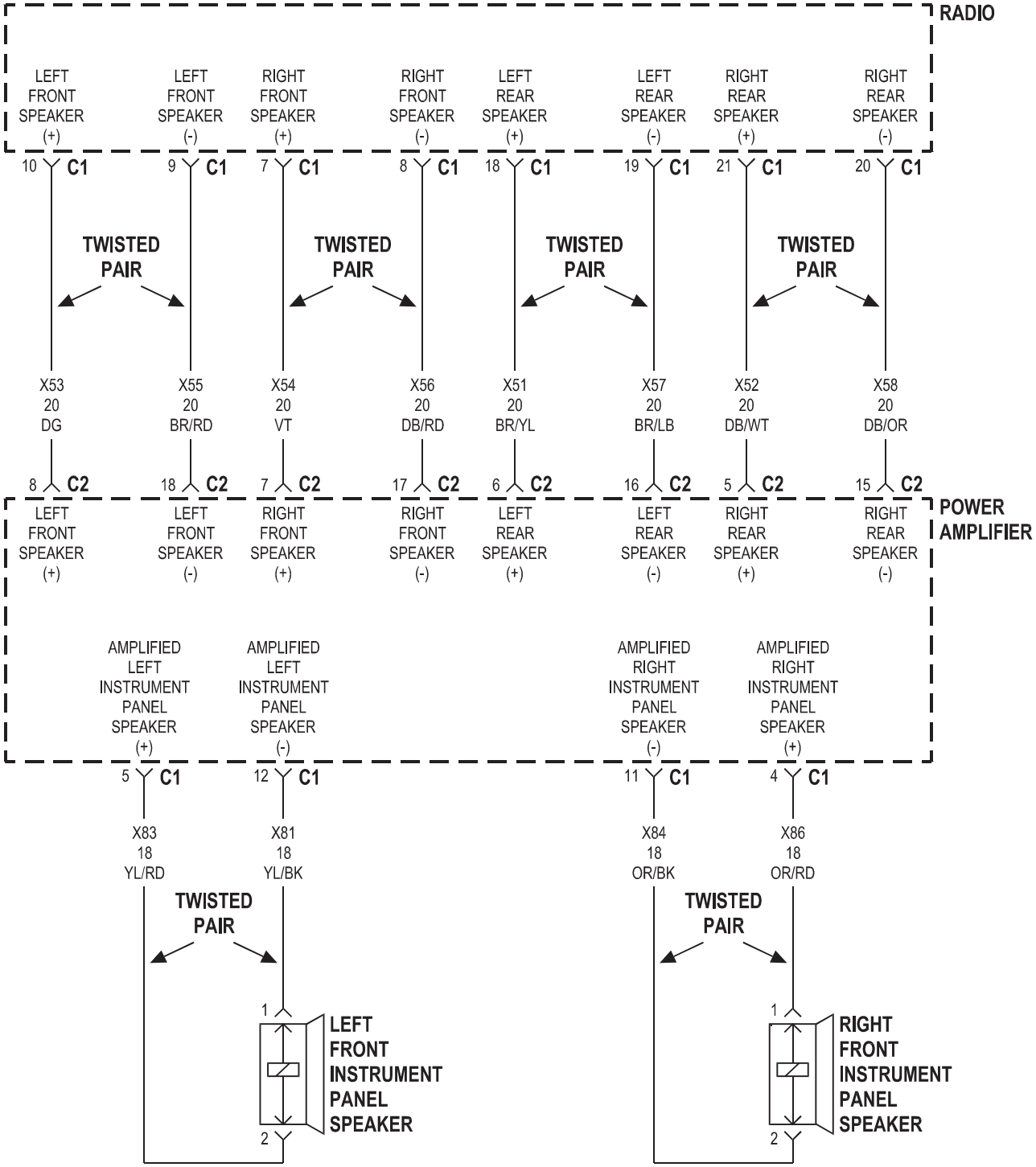
RADIO
LEFT FRONT SPEAKER (+)
LEFT FRONT SPEAKER (-)
RIGHT FRONT SPEAKER (+)
RIGHT FRONT SPEAKER (-)
LEFT REAR SPEAKER (+)
LEFT REAR SPEAKER (-)
RIGHT REAR SPEAKER (+)
RIGHT REAR SPEAKER (-)
10 C1
9 C1
7 C1
8 C1
18 C1
19 C1
21 C1
20 C1
TWISTED PAIR
TWISTED PAIR
TWISTED PAIR
TWISTED PAIR
X53 20 DG
X55 20 BR/RD
X54 20 VT
X56 20 DB/RD
X51 20 BR/YL
X57 20 BR/LB
X52 20 DB/WT
X58 20 DB/OR
8 C2
18 C2
7 C2
17 C2
6 C2
16 C2
5 C2
15 C2
POWER AMPLIFIER
LEFT FRONT SPEAKER (+)
LEFT FRONT SPEAKER (-)
RIGHT FRONT SPEAKER (+)
RIGHT FRONT SPEAKER (-)
LEFT REAR SPEAKER (+)
LEFT REAR SPEAKER (-)
RIGHT REAR SPEAKER (+)
RIGHT REAR SPEAKER (-)
AMPLIFIED LEFT INSTRUMENT PANEL SPEAKER (+)
AMPLIFIED LEFT INSTRUMENT PANEL SPEAKER (-)
AMPLIFIED RIGHT INSTRUMENT PANEL SPEAKER (-)
AMPLIFIED RIGHT INSTRUMENT PANEL SPEAKER (+)
5 C1
12 C1
11 C1
4 C1
X83 18 YL/RD
X81 18 YL/BK
X84 18 OR/BK
X86 18 OR/RD
TWISTED PAIR
TWISTED PAIR
1
2
LEFT FRONT INSTRUMENT PANEL SPEAKER
1
2
RIGHT FRONT INSTRUMENT PANEL SPEAKER

JR27 PREMIUM

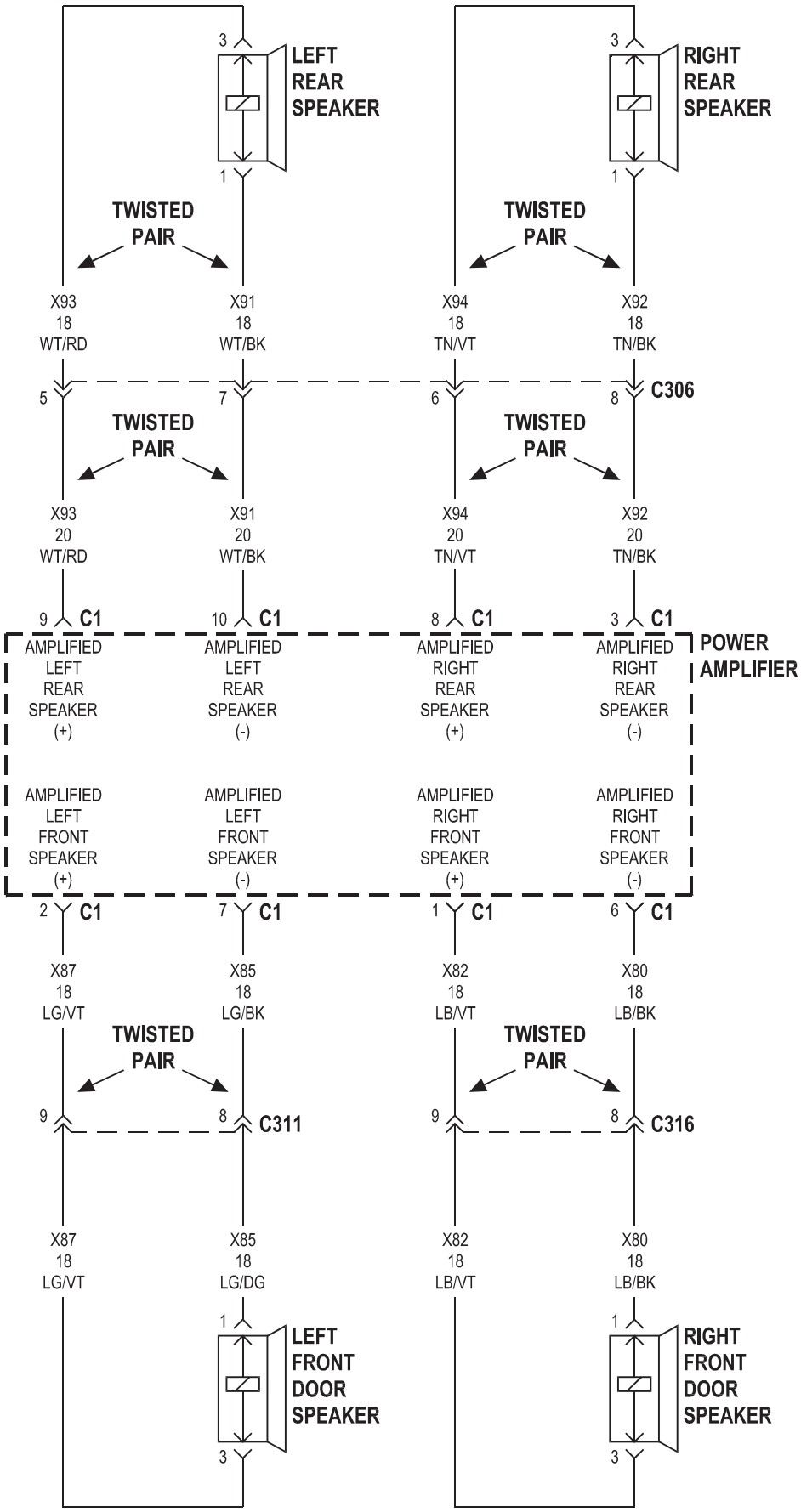

JR41 PREMIUM

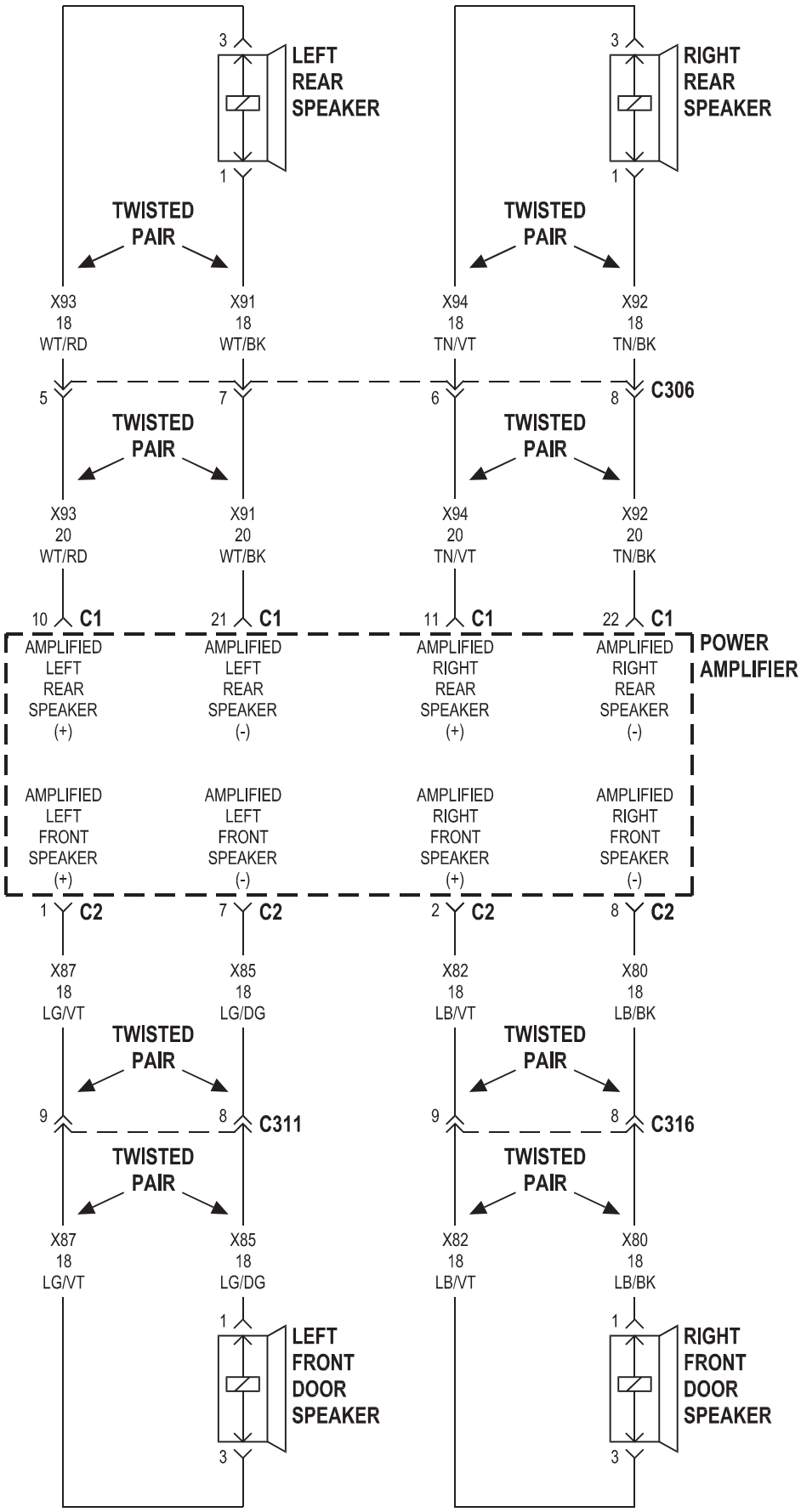

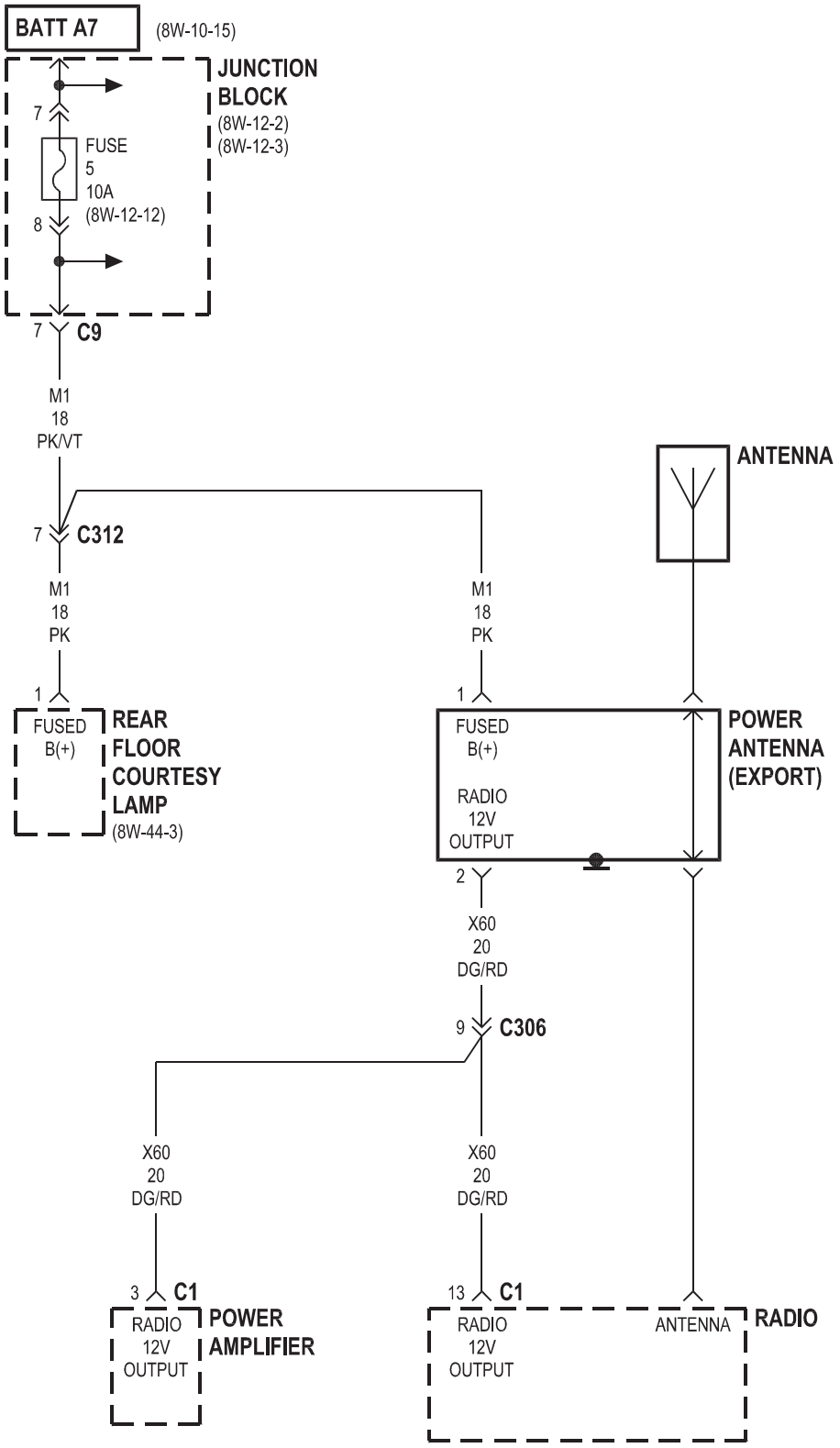
BATT A7
(8W-10-15)
JUNCTION BLOCK
(8W-12-2)
(8W-12-3)
7
FUSE
5
10A
(8W-12-12)
8
7
C9
M1
18
PK/VT
ANTENNA
7
C312
M1
18
PK
M1
18
PK
1
FUSED
B(+)
REAR FLOOR COURTESY LAMP
(8W-44-3)
1
FUSED
B(+)
RADIO
12V
OUTPUT
POWER ANTENNA (EXPORT)
2
X60
20
DG/RD
9
C306
X60
20
DG/RD
X60
20
DG/RD
3
C1
RADIO
12V
OUTPUT
POWER AMPLIFIER
13
C1
RADIO
12V
OUTPUT
ANTENNA
RADIO

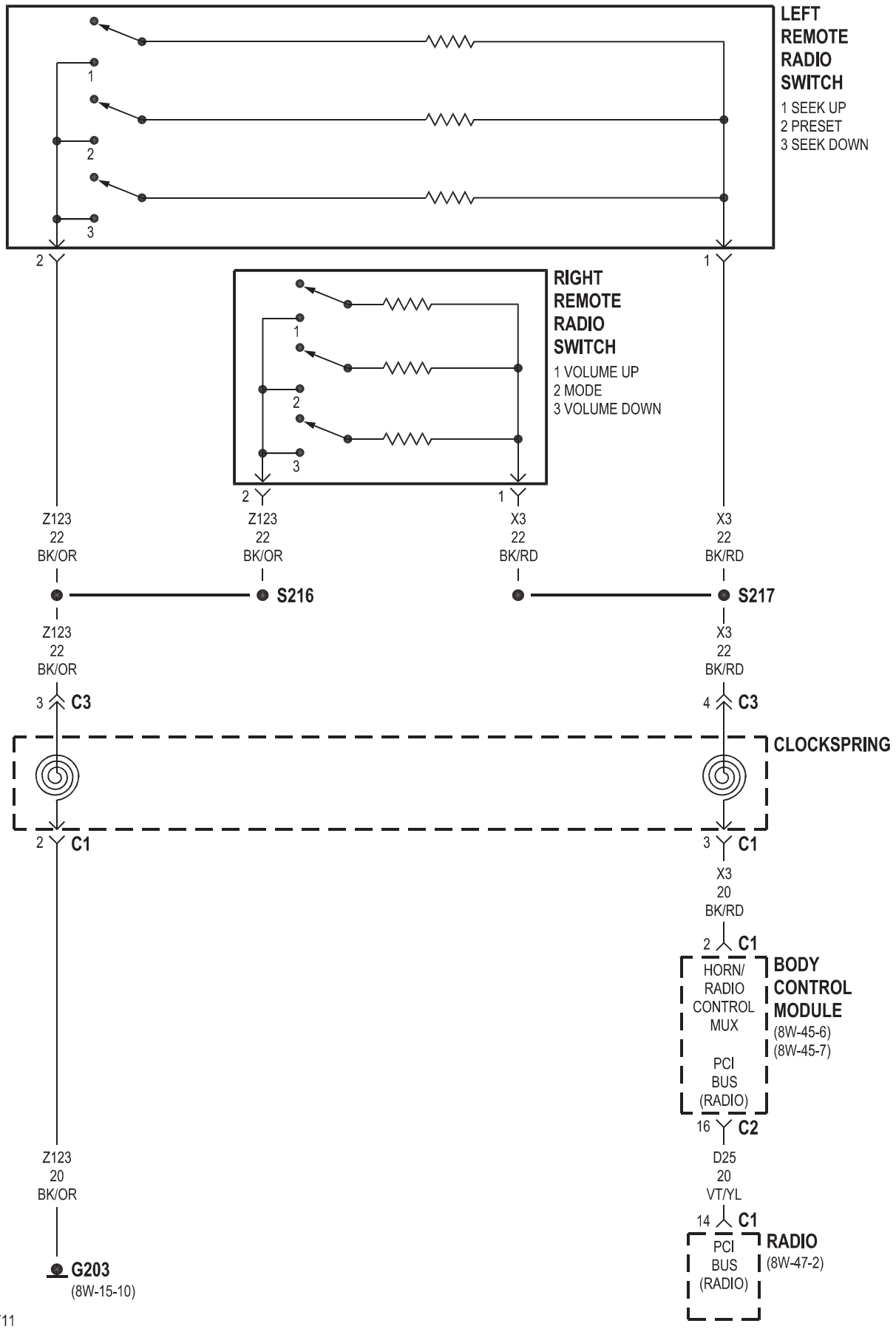
LEFT REMOTE RADIO SWITCH
1 SEEK UP
2 PRESET
3 SEEK DOWN
RIGHT REMOTE RADIO SWITCH
1 VOLUME UP
2 MODE
3 VOLUME DOWN
Z123 22 BK/OR
Z123 22 BK/OR
X3 22 BK/RD
X3 22 BK/RD
S216
S217
Z123 22 BK/OR
X3 22 BK/RD
C3
C3
CLOCKSPRING
C1
C1
X3 20 BK/RD
C1
HORN/ RADIO CONTROL MUX
PCI BUS (RADIO)
BODY CONTROL MODULE
(8W-45-6)
(8W-45-7)
C2
D25 20 VT/YL
C1
PCI BUS (RADIO)
RADIO
(8W-47-2)
Z123 20 BK/OR
G203
(8W-15-10)

8W-48 REAR WINDOW DEFOGGER

Component	Page
A/C-Heater Control	8W-48-2
Automatic Temperature Control Head	8W-48-3
Body Control Module	8W-48-2, 3
Fuse 6	8W-48-2, 3
Fuse 15	8W-48-2, 3
G202	8W-48-3
G203	8W-48-4
G303	8W-48-2, 3
Junction Block	8W-48-2, 3
Left Power Mirror	8W-48-2, 3, 4
Rear Window Defogger	8W-48-2, 3
Rear Window Defogger Relay	8W-48-2, 3
Right Power Mirror	8W-48-2, 3, 4

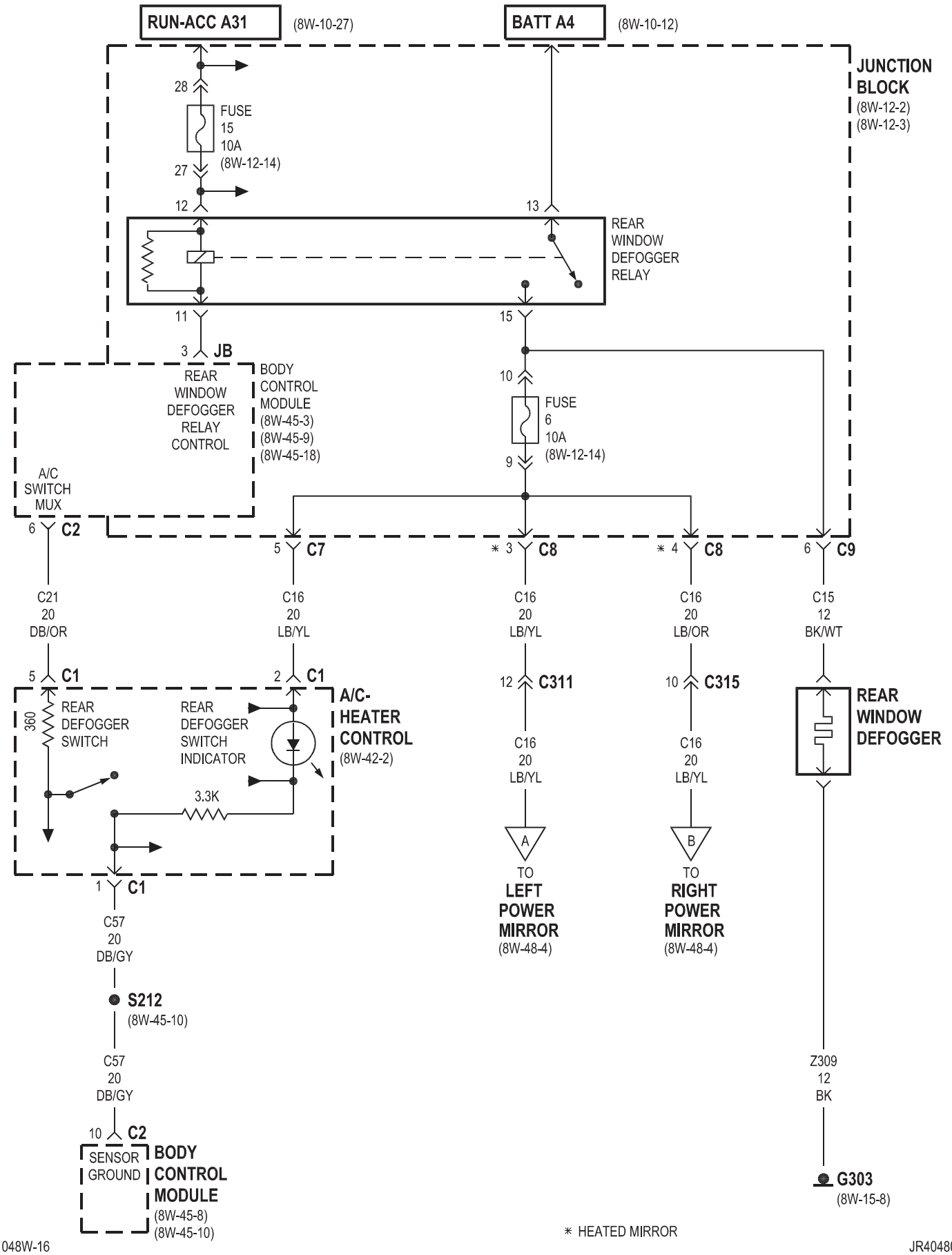

* HEATED MIRROR

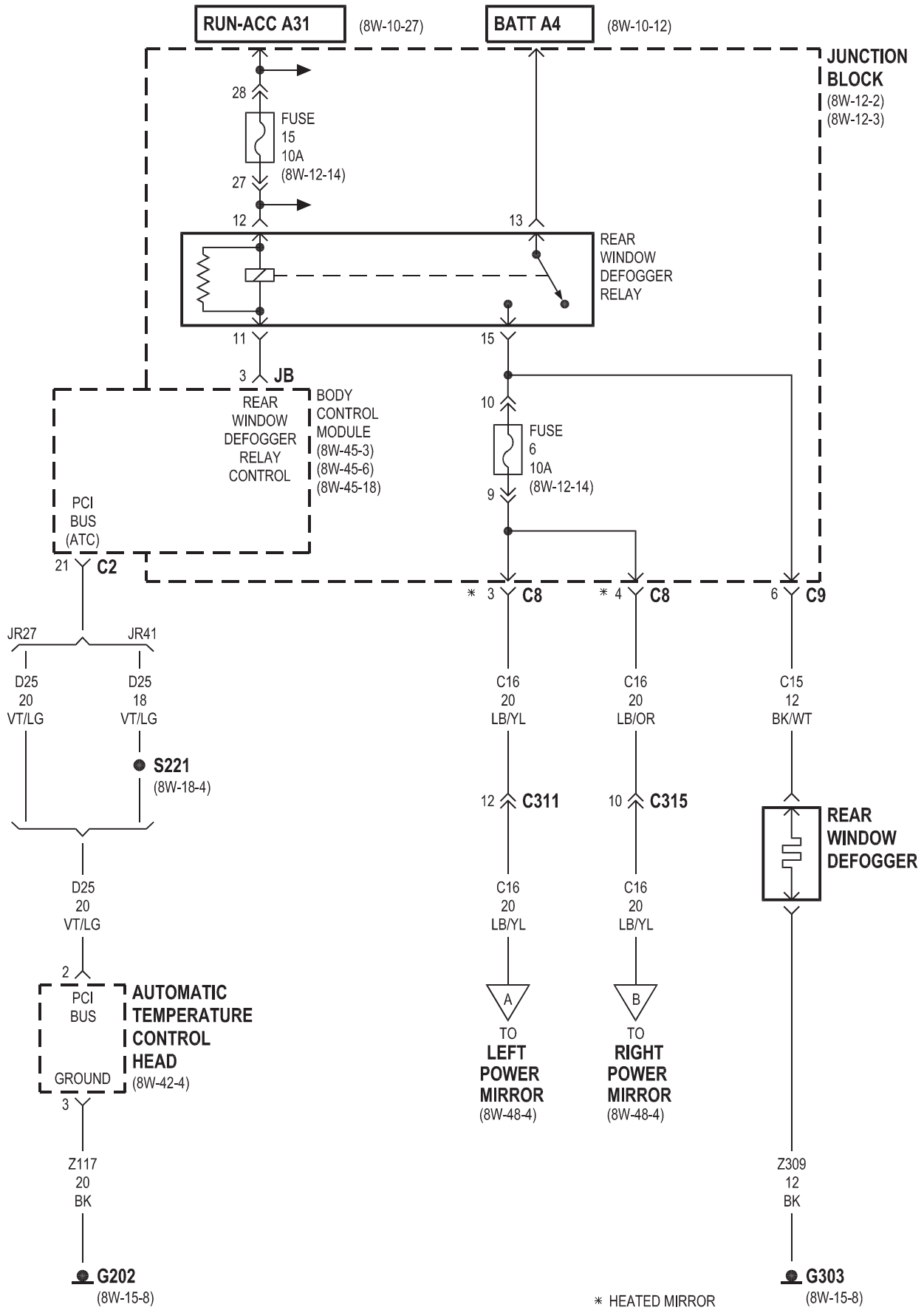
RUN-ACC A31
(8W-10-27)
BATT A4
(8W-10-12)
JUNCTION BLOCK
(8W-12-2)
(8W-12-3)
28
FUSE 15 10A
(8W-12-14)
27
12
13
REAR WINDOW DEFOGGER RELAY
11
15
3
JB
REAR WINDOW DEFOGGER RELAY CONTROL
BODY CONTROL MODULE
(8W-45-3)
(8W-45-6)
(8W-45-18)
10
FUSE 6 10A
(8W-12-14)
9
PCI BUS (ATC)
21
C2
* 3
C8
* 4
C8
6
C9
JR27
JR41
D25 20 VT/LG
D25 18 VT/LG
S221
(8W-18-4)
C16 20 LB/YL
C16 20 LB/OR
C15 12 BK/WT
12
C311
10
C315
REAR WINDOW DEFOGGER
D25 20 VT/LG
C16 20 LB/YL
C16 20 LB/YL
2
PCI BUS
AUTOMATIC TEMPERATURE CONTROL HEAD
(8W-42-4)
GROUND
3
A
B
TO LEFT POWER MIRROR
(8W-48-4)
TO RIGHT POWER MIRROR
(8W-48-4)
Z117 20 BK
Z309 12 BK
G202
(8W-15-8)
* HEATED MIRROR
G303
(8W-15-8)

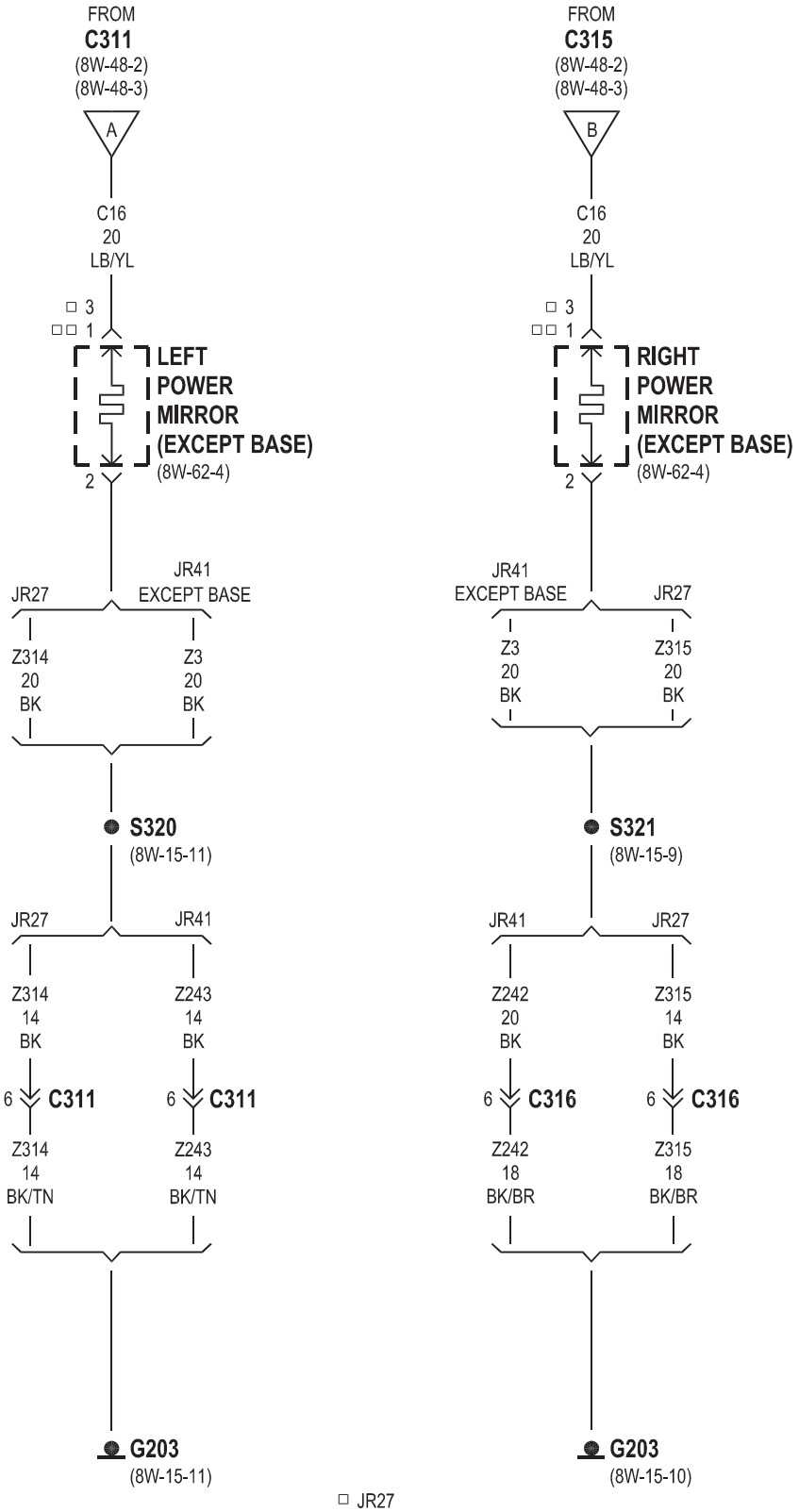
FROM
C311
(8W-48-2)
(8W-48-3)
A
C16
20
LB/YL
3
1
LEFT
POWER
MIRROR
(EXCEPT BASE)
(8W-62-4)
2
JR27
JR41
EXCEPT BASE
Z314
20
BK
Z3
20
BK
S320
(8W-15-11)
JR27
JR41
Z314
14
BK
Z243
14
BK
6
C311
6
C311
Z314
14
BK/TN
Z243
14
BK/TN
G203
(8W-15-11)
FROM
C315
(8W-48-2)
(8W-48-3)
B
C16
20
LB/YL
3
1
RIGHT
POWER
MIRROR
(EXCEPT BASE)
(8W-62-4)
2
JR41
EXCEPT BASE
JR27
Z3
20
BK
Z315
20
BK
S321
(8W-15-9)
JR41
JR27
Z242
20
BK
Z315
14
BK
6
C316
6
C316
Z242
18
BK/BR
Z315
18
BK/BR
G203
(8W-15-10)
JR27
JR41

8W-50 FRONT LIGHTING

Component	Page
Auto Headlamp Relay	8W-50-6
Auto Headlamp Switch	8W-50-5
Body Control Module	8W-50-2, 3, 4, 5, 6, 8, 10, 12, 13, 14
Combination Flasher	8W-50-10
Daytime Running Lamp Module	8W-50-2, 3, 4, 5, 9, 11
Fog Lamp Relay	8W-50-10
Front Fog Lamp Switch	8W-50-10
Fuse 2	8W-50-3, 5, 14
Fuse 3	8W-50-3, 5, 14
Fuse 4	8W-50-2, 4, 11, 13
Fuse 7	8W-50-5, 7, 8, 10
Fuse 10	8W-50-9, 11, 16
Fuse 12	8W-50-2, 4, 13
Fuse 13	8W-50-2, 4, 9, 13
Fuse 16	8W-50-7
Fuse 20	8W-50-10
G106	8W-50-3, 5, 7, 8, 9, 10, 15, 16
G108	8W-50-3, 5, 7, 8, 9, 10, 15, 16
G301	8W-50-11, 12
Headlamp Beam Select Switch	8W-50-6
Headlamp Delay Relay	8W-50-2, 4, 9, 13
Headlamp Leveling Switch	8W-50-12
Headlamp Switch	8W-50-6
Instrument Cluster	8W-50-7, 9, 10, 16
Junction Block	8W-50-2, 3, 4, 5, 6, 7, 8, 9, 10, 11, 12, 13, 14, 15, 16
Left Fog Lamp	8W-50-9, 10, 16
Left Headlamp	8W-50-2, 3, 4, 5
Left Lavalier Module	8W-50-12, 13, 14, 15
Left Park/Turn Signal Lamp	8W-50-7, 8
Multi-Function Switch	8W-50-2, 3, 4, 5, 6, 7, 8, 9, 10, 12, 13, 14, 16
Park Brake Switch	8W-50-11
Park Lamp Relay	8W-50-8
Power Distribution Center	8W-50-2, 4, 7, 10, 13
Right Fog Lamp	8W-50-9, 10, 16
Right Headlamp	8W-50-2, 3, 4, 5
Right Lavalier Module	8W-50-12, 13, 14, 15
Right Park/Turn Signal Lamp	8W-50-7, 8

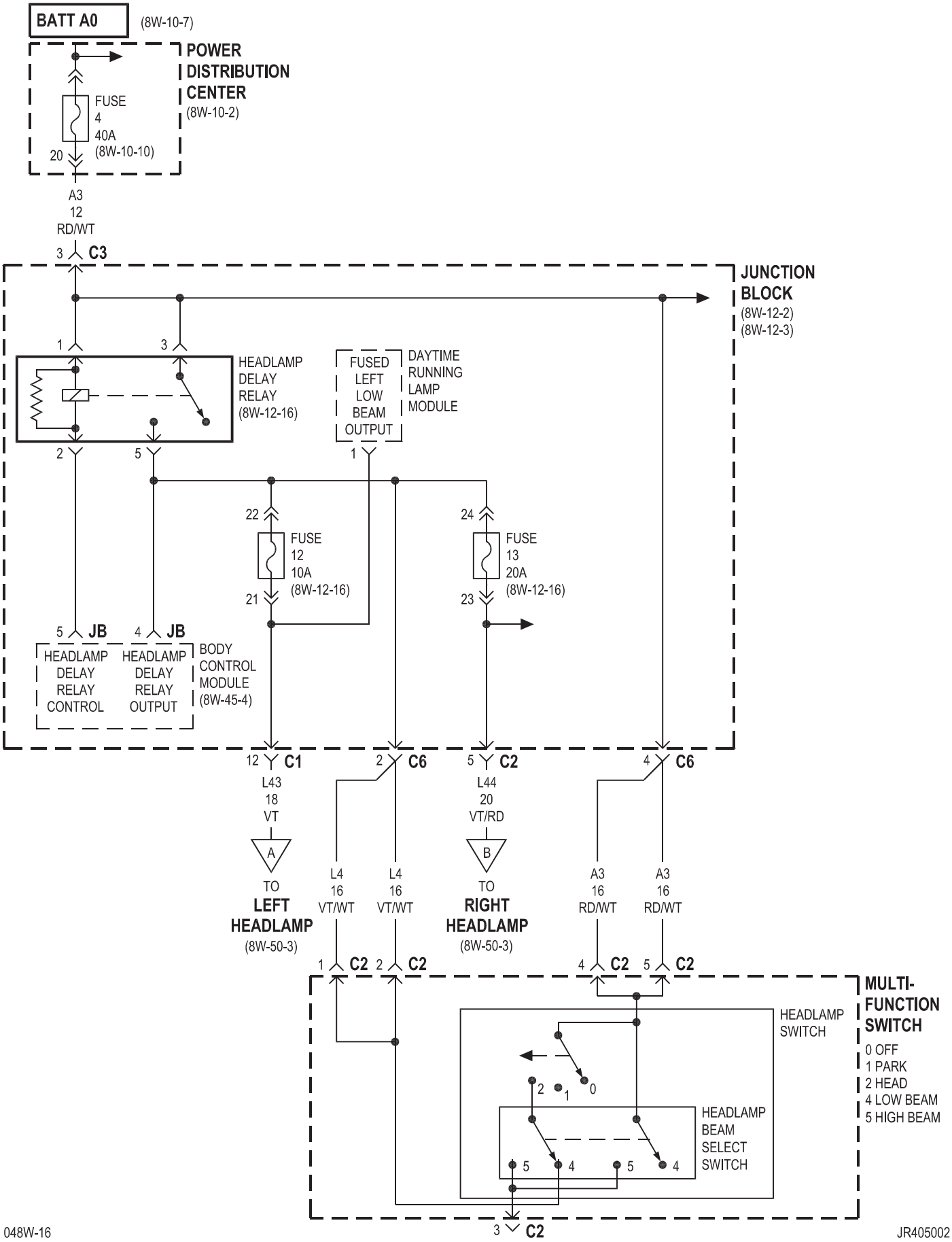
BATT A0
(8W-10-7)
POWER DISTRIBUTION CENTER
(8W-10-2)
FUSE 4 40A
(8W-10-10)
20
A3 12 RD/WT
3 C3
JUNCTION BLOCK
(8W-12-2)
(8W-12-3)
1
3
HEADLAMP DELAY RELAY
(8W-12-16)
FUSED LEFT LOW BEAM OUTPUT
DAYTIME RUNNING LAMP MODULE
2
5
1
22
FUSE 12 10A
(8W-12-16)
21
24
FUSE 13 20A
(8W-12-16)
23
5 JB
4 JB
HEADLAMP DELAY RELAY CONTROL
HEADLAMP DELAY RELAY OUTPUT
BODY CONTROL MODULE
(8W-45-4)
12 C1
2 C6
5 C2
4 C6
L43 18 VT
L44 20 VT/RD
A
B
TO LEFT HEADLAMP
(8W-50-3)
L4 16 VT/WT
L4 16 VT/WT
TO RIGHT HEADLAMP
(8W-50-3)
A3 16 RD/WT
A3 16 RD/WT
1 C2
2 C2
4 C2
5 C2
MULTI-FUNCTION SWITCH
0 OFF
1 PARK
2 HEAD
4 LOW BEAM
5 HIGH BEAM
HEADLAMP SWITCH
2
1
0
HEADLAMP BEAM SELECT SWITCH
5
4
5
4
3 C2

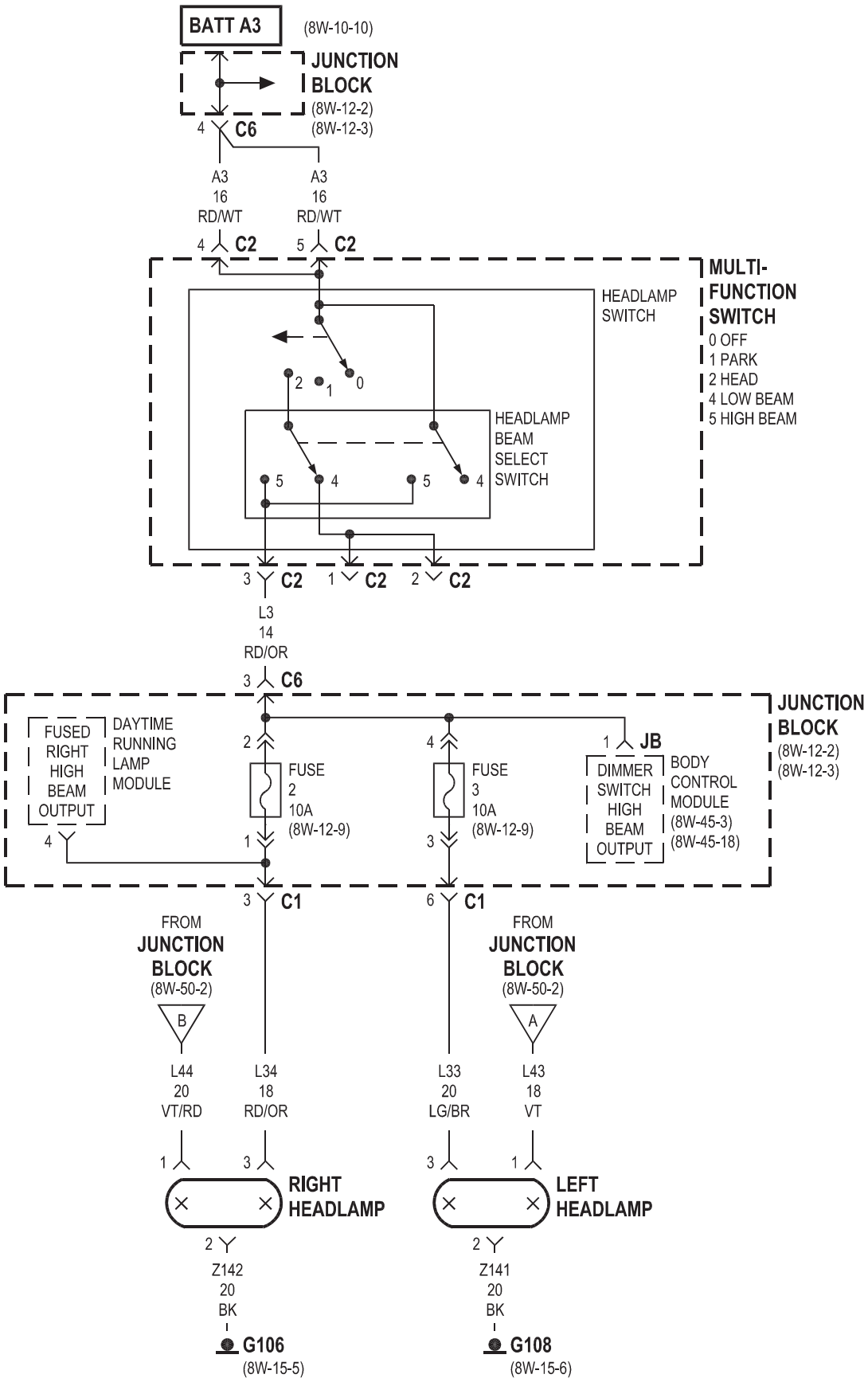
BATT A3
(8W-10-10)
JUNCTION BLOCK
(8W-12-2)
(8W-12-3)
4 C6
A3
16
RD/WT
A3
16
RD/WT
4 C2
5 C2
MULTI-FUNCTION SWITCH
0 OFF
1 PARK
2 HEAD
4 LOW BEAM
5 HIGH BEAM
HEADLAMP SWITCH
HEADLAMP BEAM SELECT SWITCH
3 C2
1 C2
2 C2
L3
14
RD/OR
3 C6
JUNCTION BLOCK
(8W-12-2)
(8W-12-3)
FUSED RIGHT HIGH BEAM OUTPUT
DAYTIME RUNNING LAMP MODULE
FUSE 2 10A (8W-12-9)
FUSE 3 10A (8W-12-9)
1 JB
DIMMER SWITCH HIGH BEAM OUTPUT
BODY CONTROL MODULE
(8W-45-3)
(8W-45-18)
3 C1
6 C1
FROM JUNCTION BLOCK
(8W-50-2)
B
FROM JUNCTION BLOCK
(8W-50-2)
A
L44
20
VT/RD
L34
18
RD/OR
L33
20
LG/BR
L43
18
VT
RIGHT HEADLAMP
LEFT HEADLAMP
Z142
20
BK
Z141
20
BK
G106
(8W-15-5)
G108
(8W-15-6)

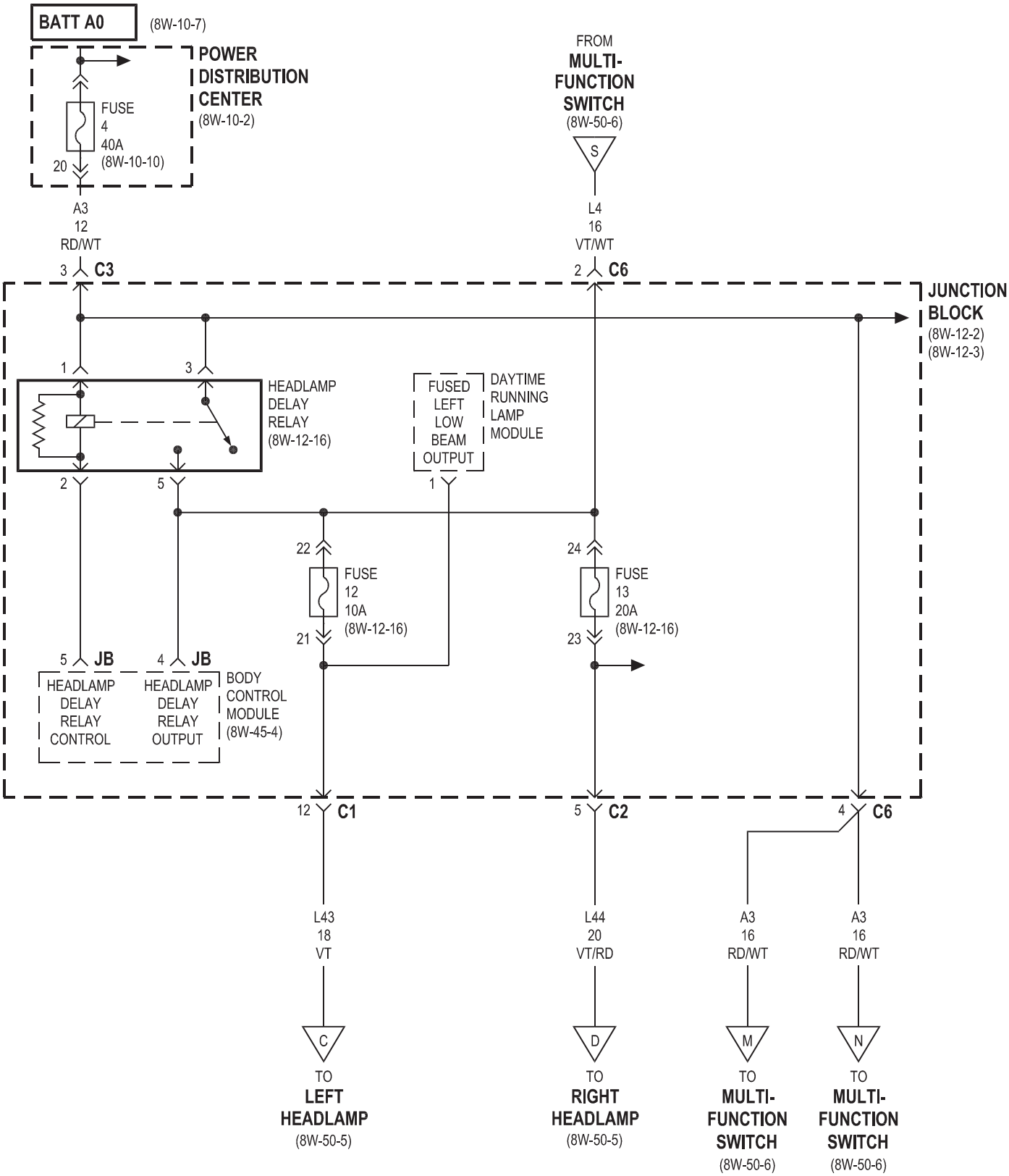
BATT A0
(8W-10-7)
POWER DISTRIBUTION CENTER
(8W-10-2)
FUSE 4 40A
(8W-10-10)
20
A3 12 RD/WT
3 C3
FROM MULTI-FUNCTION SWITCH
(8W-50-6)
S
L4 16 VT/WT
2 C6
JUNCTION BLOCK
(8W-12-2)
(8W-12-3)
1
3
HEADLAMP DELAY RELAY
(8W-12-16)
2
5
FUSED LEFT LOW BEAM OUTPUT
DAYTIME RUNNING LAMP MODULE
1
22
FUSE 12 10A
(8W-12-16)
21
24
FUSE 13 20A
(8W-12-16)
23
5 JB
HEADLAMP DELAY RELAY CONTROL
4 JB
HEADLAMP DELAY RELAY OUTPUT
BODY CONTROL MODULE
(8W-45-4)
12 C1
5 C2
4 C6
L43 18 VT
L44 20 VT/RD
A3 16 RD/WT
A3 16 RD/WT
C
D
M
N
TO LEFT HEADLAMP
(8W-50-5)
TO RIGHT HEADLAMP
(8W-50-5)
TO MULTI-FUNCTION SWITCH
(8W-50-6)
TO MULTI-FUNCTION SWITCH
(8W-50-6)

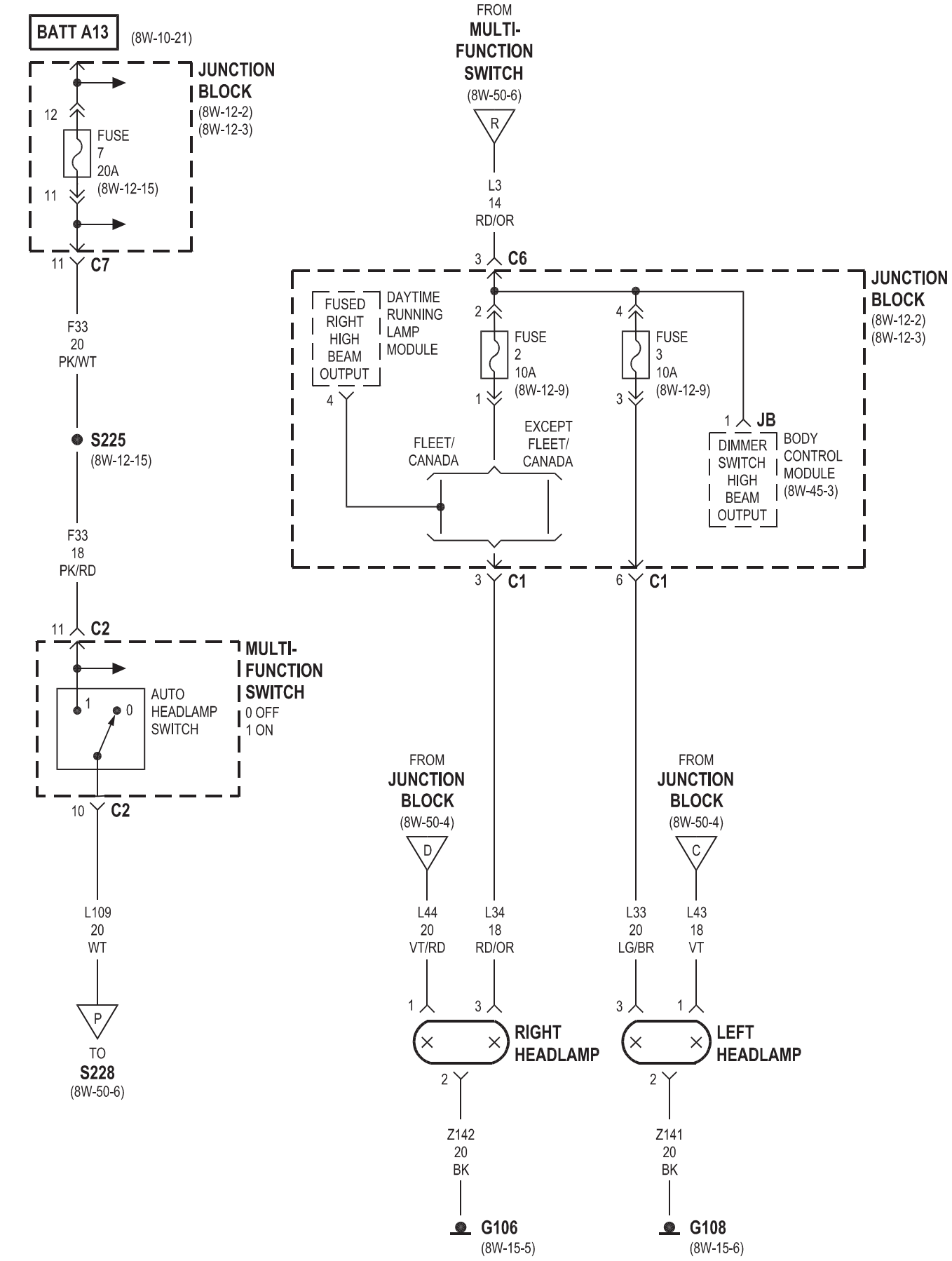
BATT A13
(8W-10-21)
JUNCTION BLOCK
(8W-12-2)
(8W-12-3)
12
FUSE
7
20A
(8W-12-15)
11
11
C7
F33
20
PK/WT
S225
(8W-12-15)
F33
18
PK/RD
11
C2
MULTI-FUNCTION SWITCH
AUTO HEADLAMP SWITCH
1
0
0 OFF
1 ON
10
C2
L109
20
WT
P
TO
S228
(8W-50-6)
FROM
MULTI-FUNCTION SWITCH
(8W-50-6)
R
L3
14
RD/OR
3
C6
JUNCTION BLOCK
(8W-12-2)
(8W-12-3)
FUSED RIGHT HIGH BEAM OUTPUT
DAYTIME RUNNING LAMP MODULE
4
2
FUSE
2
10A
(8W-12-9)
1
4
FUSE
3
10A
(8W-12-9)
3
1
JB
DIMMER SWITCH HIGH BEAM OUTPUT
BODY CONTROL MODULE
(8W-45-3)
FLEET/ CANADA
EXCEPT FLEET/ CANADA
3
C1
6
C1
FROM
JUNCTION BLOCK
(8W-50-4)
D
FROM
JUNCTION BLOCK
(8W-50-4)
C
L44
20
VT/RD
L34
18
RD/OR
L33
20
LG/BR
L43
18
VT
1
3
3
1
RIGHT HEADLAMP
LEFT HEADLAMP
2
2
Z142
20
BK
Z141
20
BK
G106
(8W-15-5)
G108
(8W-15-6)

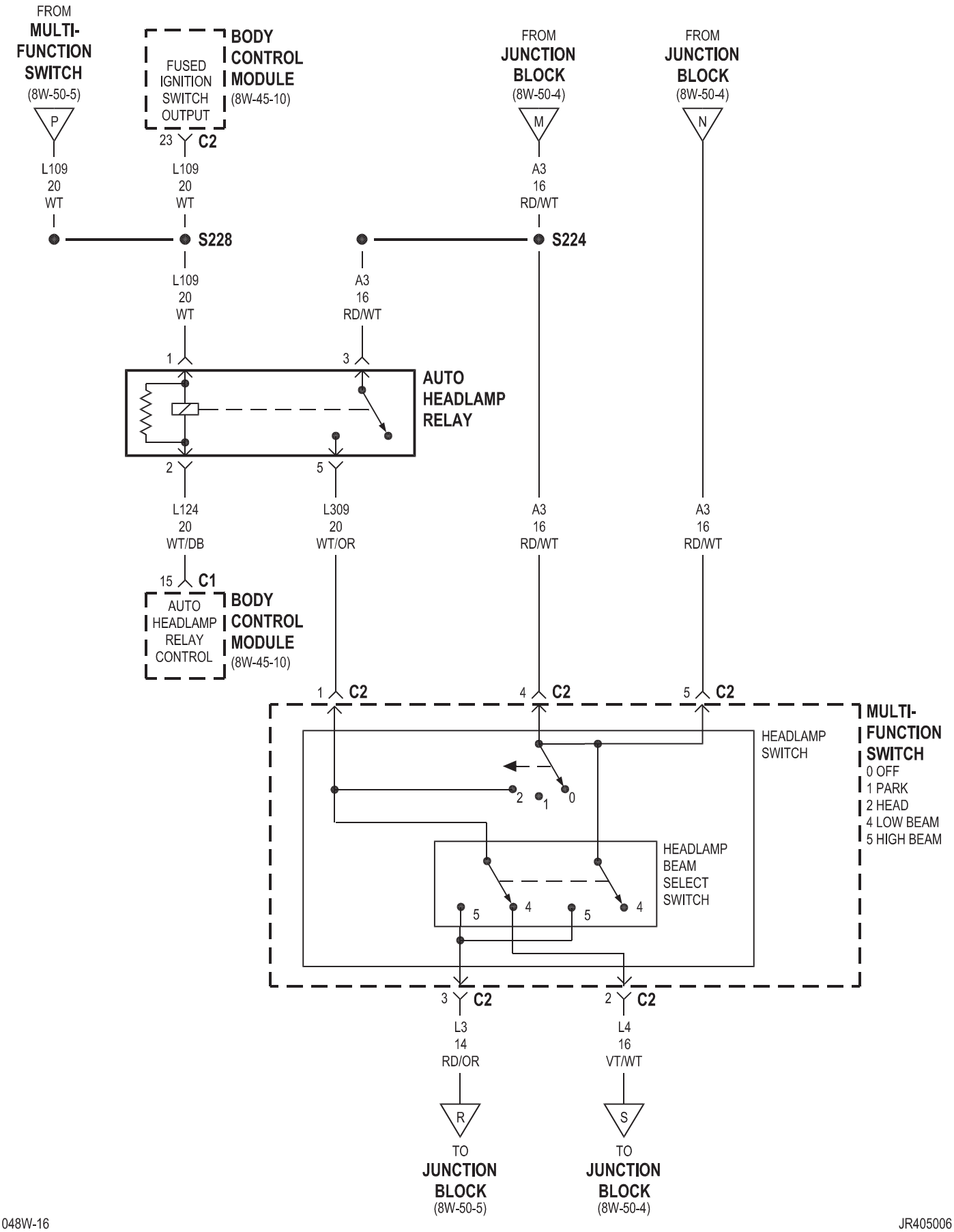
FROM
MULTI-FUNCTION SWITCH
(8W-50-5)
P
L109
20
WT
BODY CONTROL MODULE
(8W-45-10)
FUSED IGNITION SWITCH OUTPUT
23
C2
L109
20
WT
S228
L109
20
WT
1
FROM
JUNCTION BLOCK
(8W-50-4)
M
A3
16
RD/WT
S224
A3
16
RD/WT
3
AUTO HEADLAMP RELAY
2
5
L124
20
WT/DB
L309
20
WT/OR
A3
16
RD/WT
FROM
JUNCTION BLOCK
(8W-50-4)
N
A3
16
RD/WT
15
C1
BODY CONTROL MODULE
(8W-45-10)
AUTO HEADLAMP RELAY CONTROL
1
C2
4
C2
5
C2
MULTI-FUNCTION SWITCH
0 OFF
1 PARK
2 HEAD
4 LOW BEAM
5 HIGH BEAM
HEADLAMP SWITCH
2
1
0
HEADLAMP BEAM SELECT SWITCH
5
4
5
4
3
C2
2
C2
L3
14
RD/OR
L4
16
VT/WT
R
S
TO
JUNCTION BLOCK
(8W-50-5)
TO
JUNCTION BLOCK
(8W-50-4)

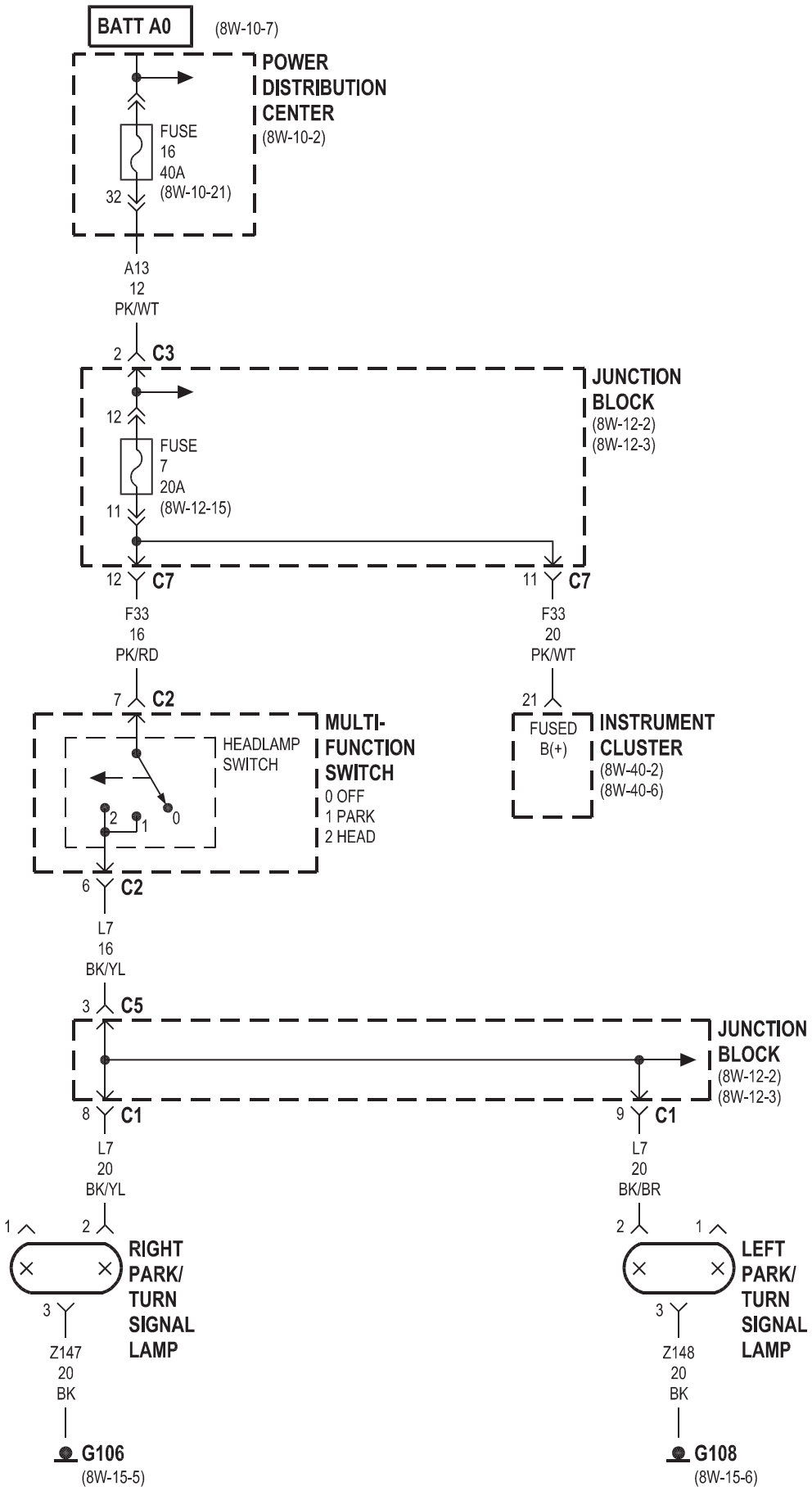
BATT A0
(8W-10-7)
POWER DISTRIBUTION CENTER
(8W-10-2)
FUSE 16 40A
(8W-10-21)
32
A13 12 PK/WT
2 C3
JUNCTION BLOCK
(8W-12-2)
(8W-12-3)
12
FUSE 7 20A
(8W-12-15)
11
12 C7
11 C7
F33 16 PK/RD
F33 20 PK/WT
7 C2
21
MULTI-FUNCTION SWITCH
HEADLAMP SWITCH
0 OFF
1 PARK
2 HEAD
FUSED B(+)
INSTRUMENT CLUSTER
(8W-40-2)
(8W-40-6)
6 C2
L7 16 BK/YL
3 C5
JUNCTION BLOCK
(8W-12-2)
(8W-12-3)
8 C1
9 C1
L7 20 BK/YL
L7 20 BK/BR
RIGHT PARK/ TURN SIGNAL LAMP
LEFT PARK/ TURN SIGNAL LAMP
Z147 20 BK
Z148 20 BK
G106
(8W-15-5)
G108
(8W-15-6)

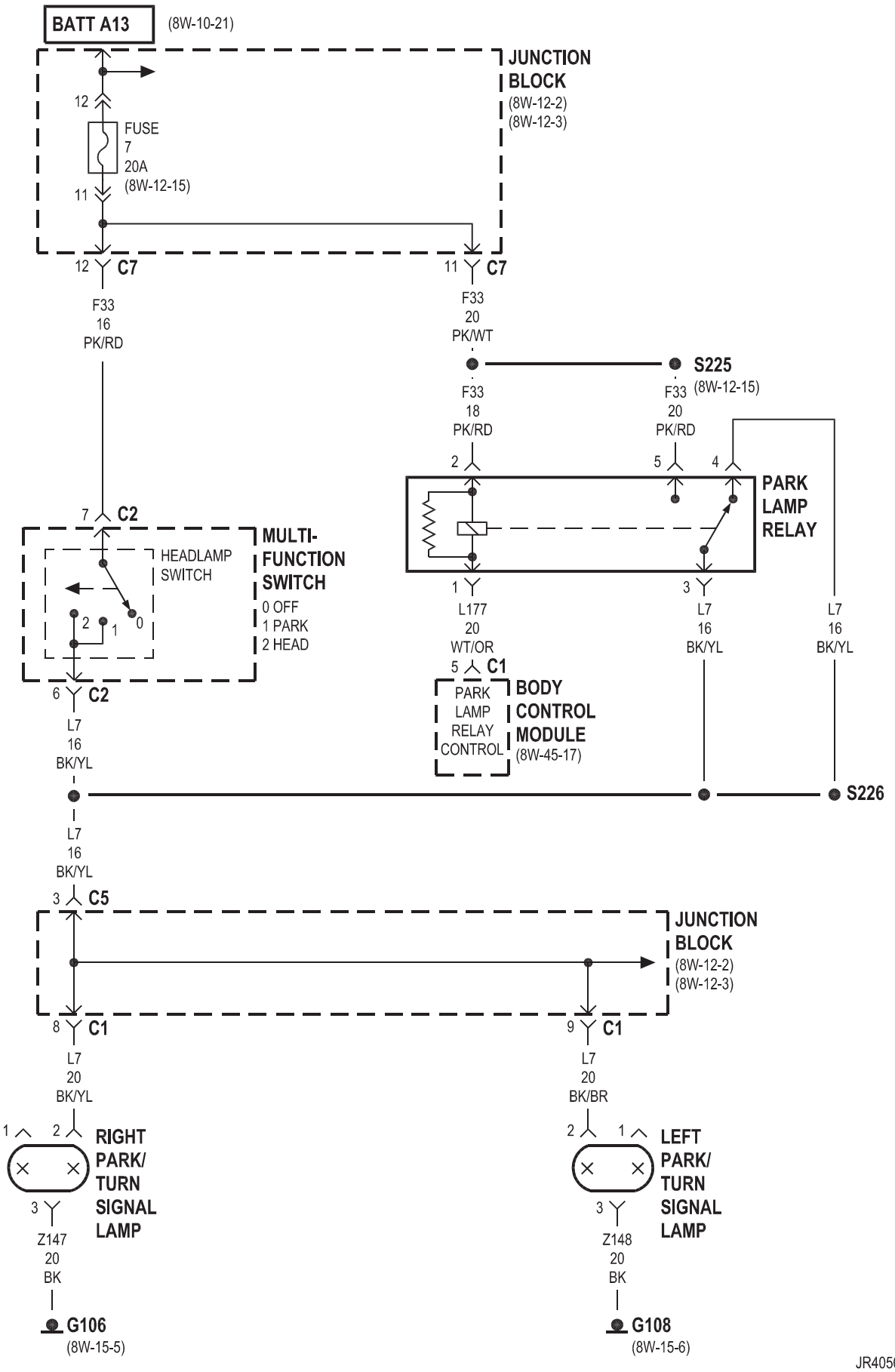
BATT A13
(8W-10-21)
JUNCTION BLOCK
(8W-12-2)
(8W-12-3)
12
FUSE 7 20A
(8W-12-15)
11
12 C7
11 C7
F33 16 PK/RD
F33 20 PK/WT
S225
(8W-12-15)
F33 18 PK/RD
F33 20 PK/RD
2
5
4
PARK LAMP RELAY
7 C2
MULTI-FUNCTION SWITCH
HEADLAMP SWITCH
0 OFF
1 PARK
2 HEAD
1
3
L177 20 WT/OR
L7 16 BK/YL
L7 16 BK/YL
5 C1
BODY CONTROL MODULE
(8W-45-17)
PARK LAMP RELAY CONTROL
6 C2
L7 16 BK/YL
S226
L7 16 BK/YL
3 C5
JUNCTION BLOCK
(8W-12-2)
(8W-12-3)
8 C1
9 C1
L7 20 BK/YL
L7 20 BK/BR
RIGHT PARK/ TURN SIGNAL LAMP
LEFT PARK/ TURN SIGNAL LAMP
Z147 20 BK
Z148 20 BK
G106
(8W-15-5)
G108
(8W-15-6)

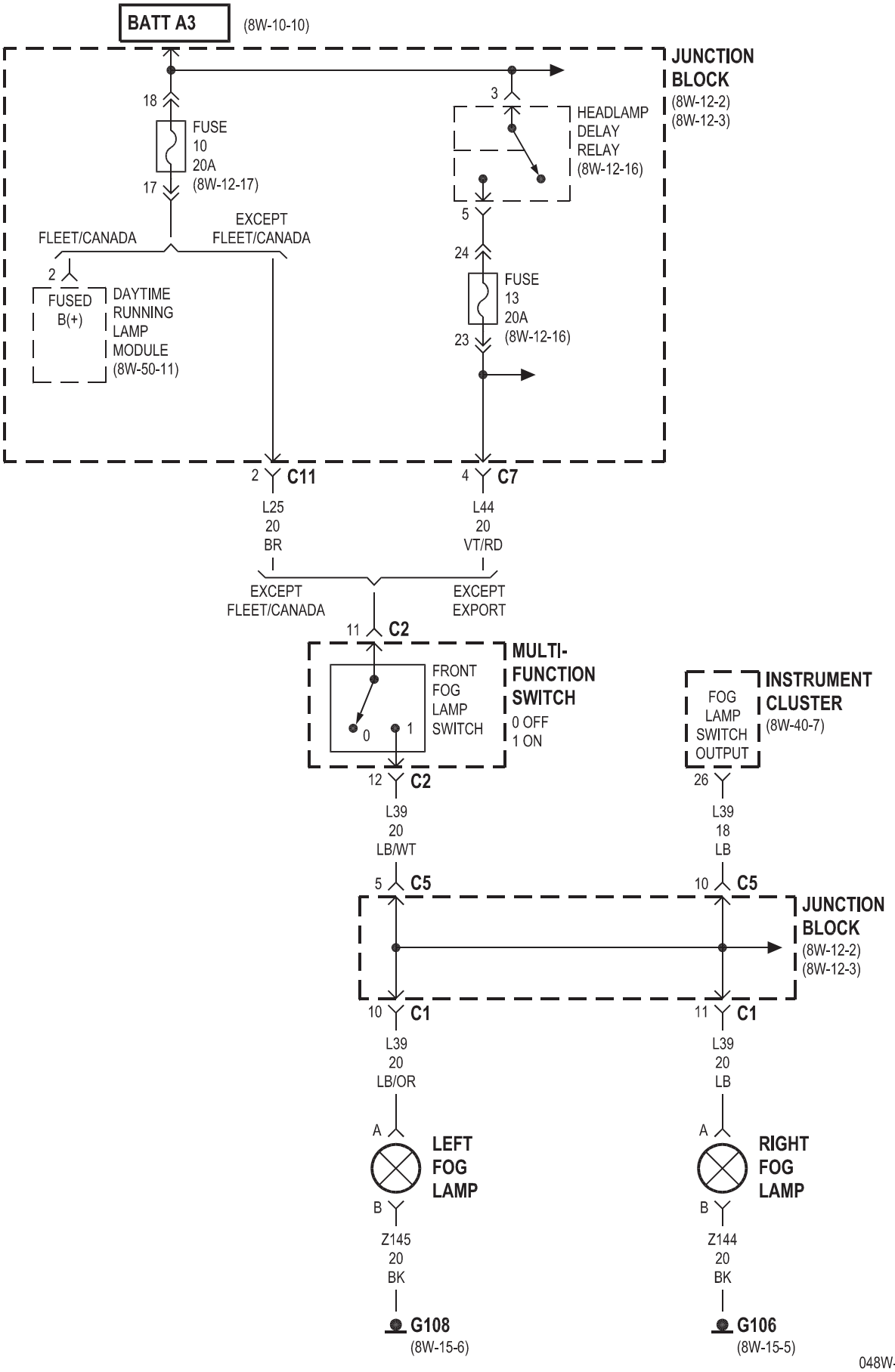
BATT A3
(8W-10-10)
JUNCTION BLOCK
(8W-12-2)
(8W-12-3)
18
FUSE
10
20A
(8W-12-17)
17
3
HEADLAMP DELAY RELAY
(8W-12-16)
5
24
FUSE
13
20A
(8W-12-16)
23
FLEET/CANADA
EXCEPT FLEET/CANADA
2
FUSED B(+)
DAYTIME RUNNING LAMP MODULE
(8W-50-11)
2 C11
4 C7
L25
20
BR
L44
20
VT/RD
EXCEPT FLEET/CANADA
EXCEPT EXPORT
11 C2
MULTI-FUNCTION SWITCH
FRONT FOG LAMP SWITCH
0
1
0 OFF
1 ON
INSTRUMENT CLUSTER
(8W-40-7)
FOG LAMP SWITCH OUTPUT
12 C2
26
L39
20
LB/WT
L39
18
LB
5 C5
10 C5
JUNCTION BLOCK
(8W-12-2)
(8W-12-3)
10 C1
11 C1
L39
20
LB/OR
L39
20
LB
A
B
LEFT FOG LAMP
RIGHT FOG LAMP
Z145
20
BK
Z144
20
BK
G108
(8W-15-6)
G106
(8W-15-5)

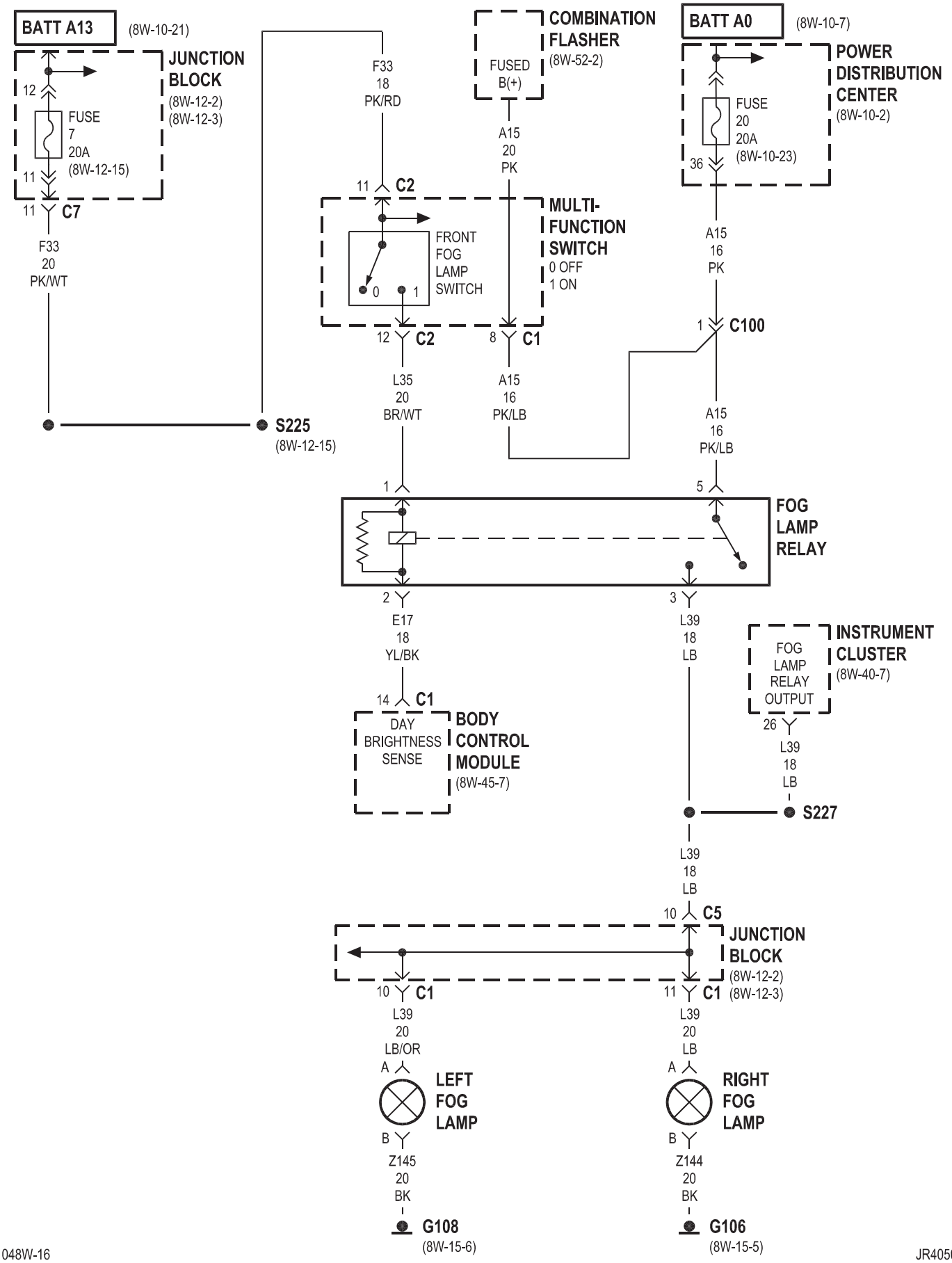
BATT A13
(8W-10-21)
JUNCTION BLOCK
(8W-12-2)
(8W-12-3)
12
FUSE 7 20A
(8W-12-15)
11
11 C7
F33 20 PK/WT
F33 18 PK/RD
COMBINATION FLASHER
(8W-52-2)
FUSED B(+)
A15 20 PK
BATT A0
(8W-10-7)
POWER DISTRIBUTION CENTER
(8W-10-2)
FUSE 20 20A
(8W-10-23)
36
A15 16 PK
11 C2
MULTI-FUNCTION SWITCH
0 OFF
1 ON
FRONT FOG LAMP SWITCH
0
1
12 C2
8 C1
1 C100
L35 20 BR/WT
A15 16 PK/LB
A15 16 PK/LB
S225
(8W-12-15)
1
5
FOG LAMP RELAY
2
3
E17 18 YL/BK
L39 18 LB
INSTRUMENT CLUSTER
(8W-40-7)
FOG LAMP RELAY OUTPUT
26
L39 18 LB
14 C1
DAY BRIGHTNESS SENSE
BODY CONTROL MODULE
(8W-45-7)
S227
L39 18 LB
10 C5
JUNCTION BLOCK
(8W-12-2)
(8W-12-3)
10 C1
11 C1
L39 20 LB/OR
L39 20 LB
A
A
LEFT FOG LAMP
RIGHT FOG LAMP
B
B
Z145 20 BK
Z144 20 BK
G108
(8W-15-6)
G106
(8W-15-5)

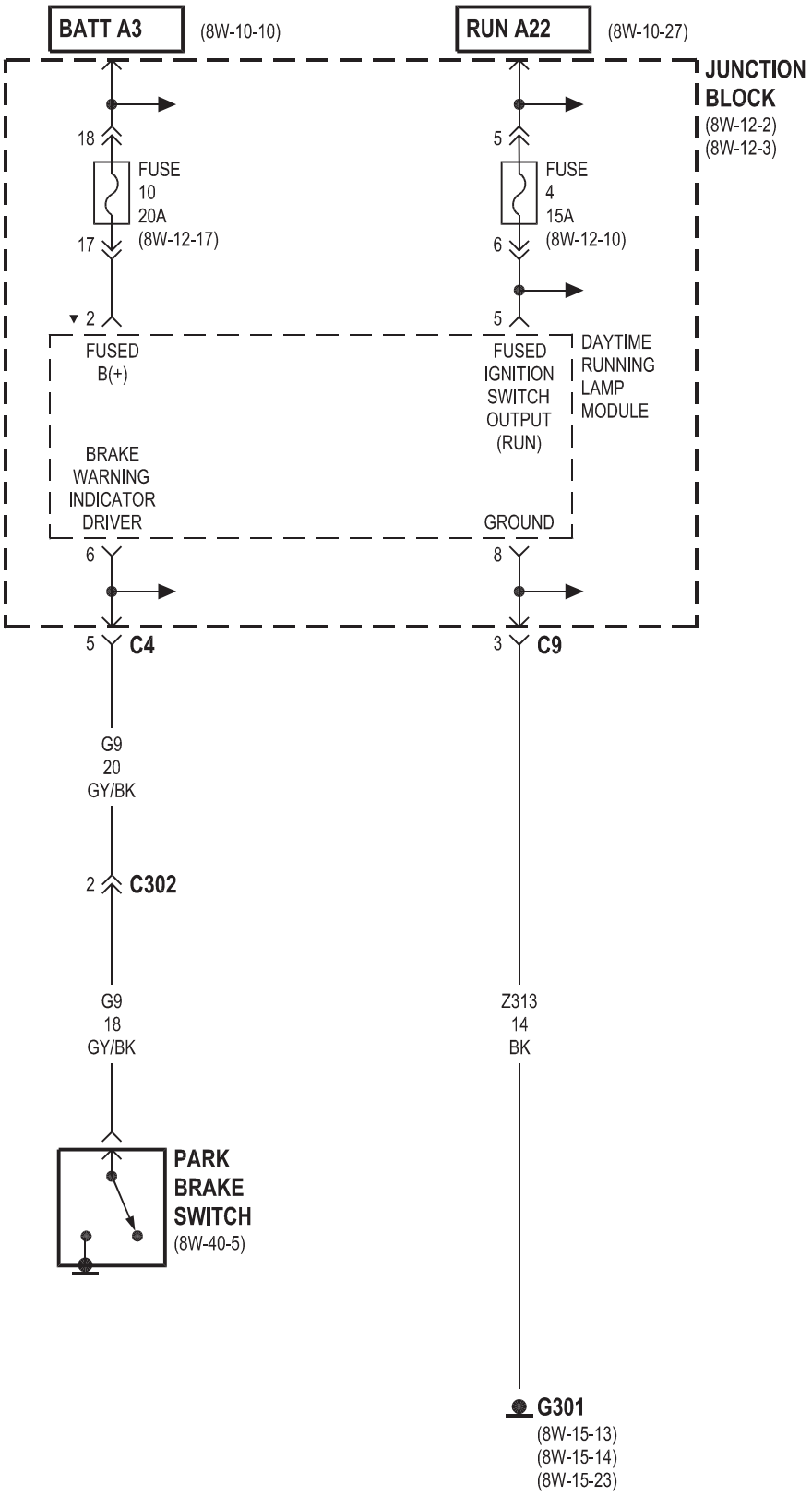

▼ FLEET/CANADA

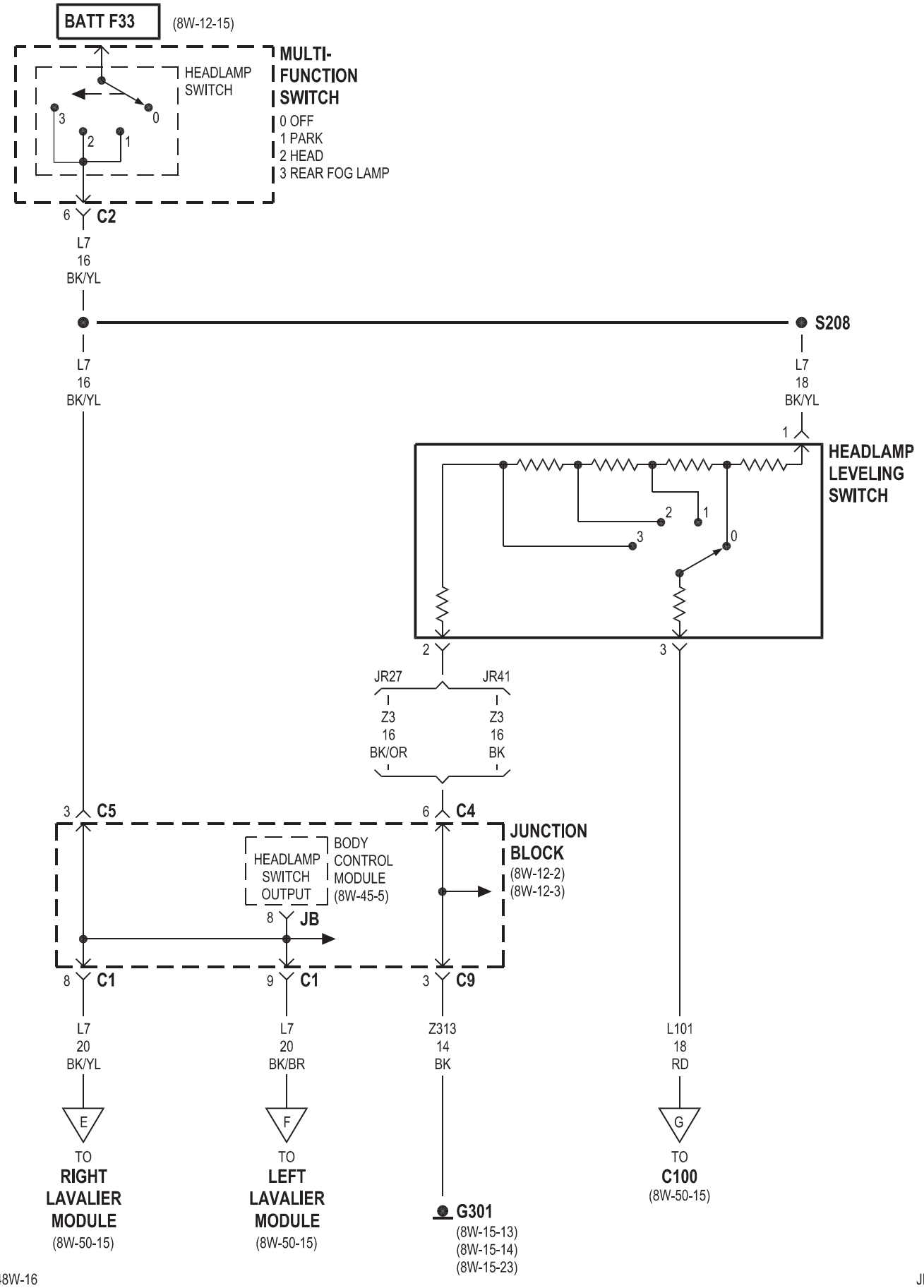
BATT F33
(8W-12-15)
MULTI-FUNCTION SWITCH
HEADLAMP SWITCH
0 OFF
1 PARK
2 HEAD
3 REAR FOG LAMP
6 C2
L7 16 BK/YL
S208
L7 18 BK/YL
HEADLAMP LEVELING SWITCH
JR27
JR41
Z3 16 BK/OR
Z3 16 BK
3 C5
6 C4
JUNCTION BLOCK
(8W-12-2)
(8W-12-3)
HEADLAMP SWITCH OUTPUT
BODY CONTROL MODULE
(8W-45-5)
8 JB
8 C1
9 C1
3 C9
L7 20 BK/YL
L7 20 BK/BR
Z313 14 BK
L101 18 RD
TO RIGHT LAVALIER MODULE
(8W-50-15)
TO LEFT LAVALIER MODULE
(8W-50-15)
G301
(8W-15-13)
(8W-15-14)
(8W-15-23)
TO C100
(8W-50-15)

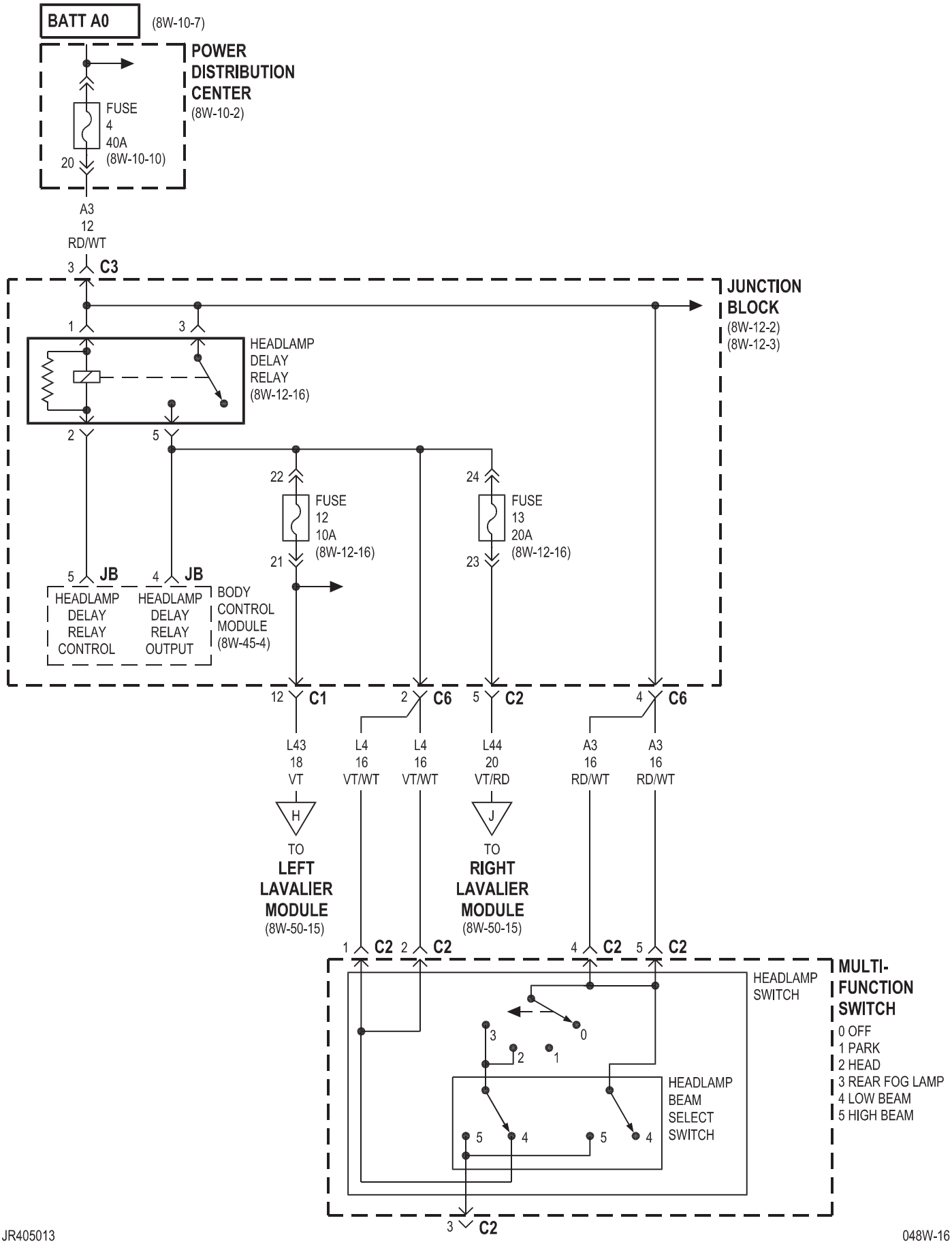
BATT A0
(8W-10-7)
POWER DISTRIBUTION CENTER
(8W-10-2)
FUSE 4 40A
(8W-10-10)
20
A3 12 RD/WT
3 C3
JUNCTION BLOCK
(8W-12-2)
(8W-12-3)
1
3
HEADLAMP DELAY RELAY
(8W-12-16)
2
5
22
FUSE 12 10A
(8W-12-16)
21
24
FUSE 13 20A
(8W-12-16)
23
5 JB
HEADLAMP DELAY RELAY CONTROL
4 JB
HEADLAMP DELAY RELAY OUTPUT
BODY CONTROL MODULE
(8W-45-4)
12 C1
2 C6
5 C2
4 C6
L43 18 VT
L4 16 VT/WT
L4 16 VT/WT
L44 20 VT/RD
A3 16 RD/WT
A3 16 RD/WT
H
TO
LEFT LAVALIER MODULE
(8W-50-15)
J
TO
RIGHT LAVALIER MODULE
(8W-50-15)
1 C2
2 C2
4 C2
5 C2
MULTI-FUNCTION SWITCH
HEADLAMP SWITCH
0
1
2
3
HEADLAMP BEAM SELECT SWITCH
4
5
4
5
0 OFF
1 PARK
2 HEAD
3 REAR FOG LAMP
4 LOW BEAM
5 HIGH BEAM
3 C2

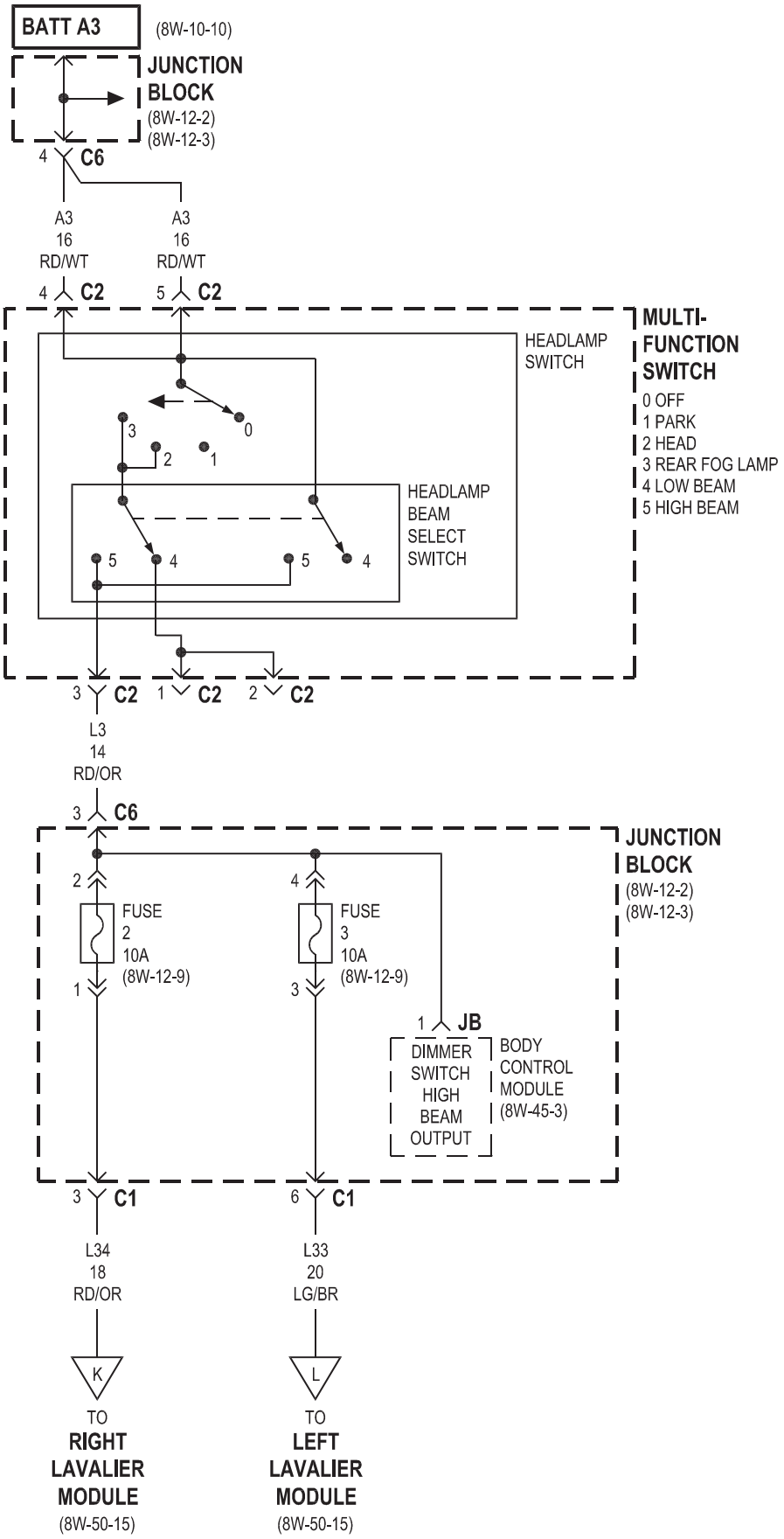
BATT A3
(8W-10-10)
JUNCTION BLOCK
(8W-12-2)
(8W-12-3)
4 C6
A3
16
RD/WT
A3
16
RD/WT
4 C2
5 C2
MULTI-FUNCTION SWITCH
0 OFF
1 PARK
2 HEAD
3 REAR FOG LAMP
4 LOW BEAM
5 HIGH BEAM
HEADLAMP SWITCH
HEADLAMP BEAM SELECT SWITCH
3 C2
1 C2
2 C2
L3
14
RD/OR
3 C6
JUNCTION BLOCK
(8W-12-2)
(8W-12-3)
FUSE 2 10A (8W-12-9)
FUSE 3 10A (8W-12-9)
1 JB
DIMMER SWITCH HIGH BEAM OUTPUT
BODY CONTROL MODULE (8W-45-3)
3 C1
6 C1
L34
18
RD/OR
L33
20
LG/BR
K
L
TO
RIGHT LAVALIER MODULE
(8W-50-15)
TO
LEFT LAVALIER MODULE
(8W-50-15)

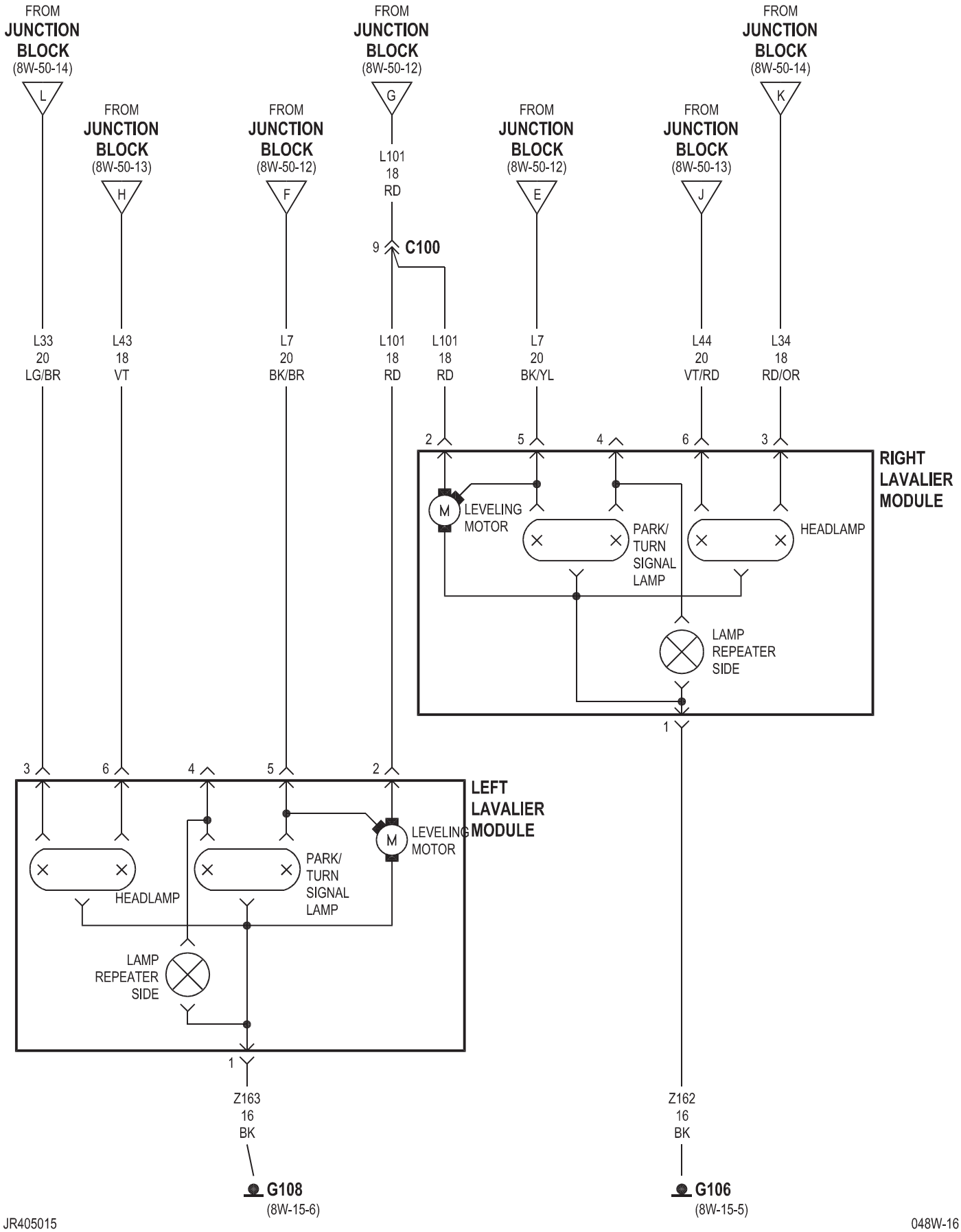
FROM JUNCTION BLOCK (8W-50-14)
L
FROM JUNCTION BLOCK (8W-50-13)
H
FROM JUNCTION BLOCK (8W-50-12)
F
FROM JUNCTION BLOCK (8W-50-12)
G
L101 18 RD
9
C100
FROM JUNCTION BLOCK (8W-50-12)
E
FROM JUNCTION BLOCK (8W-50-13)
J
FROM JUNCTION BLOCK (8W-50-14)
K
L33 20 LG/BR
L43 18 VT
L7 20 BK/BR
L101 18 RD
L101 18 RD
L7 20 BK/YL
L44 20 VT/RD
L34 18 RD/OR
2
5
4
6
3
RIGHT LAVALIER MODULE
M
LEVELING MOTOR
PARK/ TURN SIGNAL LAMP
HEADLAMP
LAMP REPEATER SIDE
1
3
6
4
5
2
LEFT LAVALIER MODULE
M
LEVELING MOTOR
PARK/ TURN SIGNAL LAMP
HEADLAMP
LAMP REPEATER SIDE
1
Z163 16 BK
G108
(8W-15-6)
Z162 16 BK
G106
(8W-15-5)

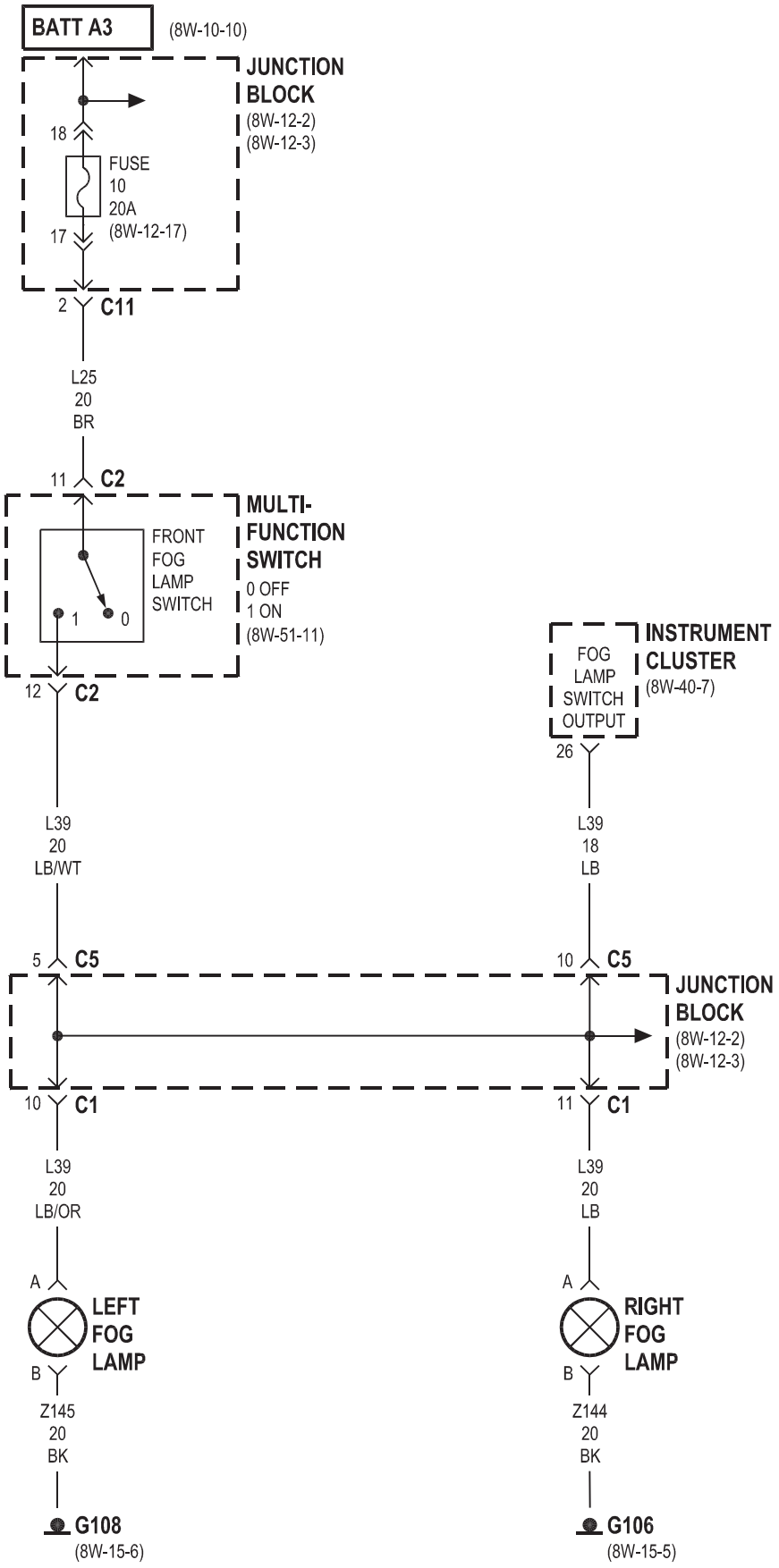
BATT A3
(8W-10-10)
JUNCTION BLOCK
(8W-12-2)
(8W-12-3)
18
FUSE 10 20A
(8W-12-17)
17
2
C11
L25 20 BR
11
C2
MULTI-FUNCTION SWITCH
FRONT FOG LAMP SWITCH
1
0
0 OFF
1 ON
(8W-51-11)
12
C2
INSTRUMENT CLUSTER
(8W-40-7)
FOG LAMP SWITCH OUTPUT
26
L39 20 LB/WT
L39 18 LB
5
C5
10
C5
JUNCTION BLOCK
(8W-12-2)
(8W-12-3)
10
C1
11
C1
L39 20 LB/OR
L39 20 LB
A
LEFT FOG LAMP
B
A
RIGHT FOG LAMP
B
Z145 20 BK
Z144 20 BK
G108
(8W-15-6)
G106
(8W-15-5)

8W-51 REAR LIGHTING

Component	Page
Automatic Day/Night Mirror	8W-51-2
Back-Up Lamp Switch	8W-51-2
Brake Lamp Switch	8W-51-3
Center High Mounted Stop Lamp	8W-51-3
Controller Antilock Brake	8W-51-3
Fuse 4	8W-51-2
Fuse 10	8W-51-5, 11
Fuse 11	8W-51-5
G103	8W-51-5
G300	8W-51-2, 3, 4, 10, 11
G302	8W-51-2, 3, 4, 6, 8, 10, 11
G310	8W-51-3, 4, 8
Instrument Cluster	8W-51-5, 11
Junction Block	8W-51-2, 3, 4, 5, 7, 8, 9, 10, 11
Left Back-Up Lamp	8W-51-2
Left License Lamp	8W-51-4, 8, 10
Left Rear Fog Lamp	8W-51-6, 11
Left Tail/Side Marker Lamp	8W-51-8, 10
Left Tail/Stop Lamp	8W-51-3
Left Tail/Turn Signal Lamp	8W-51-4
License Lamp	8W-51-4
Multi-Function Switch	8W-51-3, 5, 7, 9, 11
Power Distribution Center	8W-51-5
Rear Fog Lamp Relay	8W-51-5, 6
Right Back-Up Lamp	8W-51-2
Right Rear Fog Lamp	8W-51-6, 11
Right Tail/Side Marker Lamp	8W-51-8, 10
Right Tail/Stop Lamp	8W-51-3
Right Tail/Turn Signal Lamp	8W-51-4
Transmission Range Sensor	8W-51-2

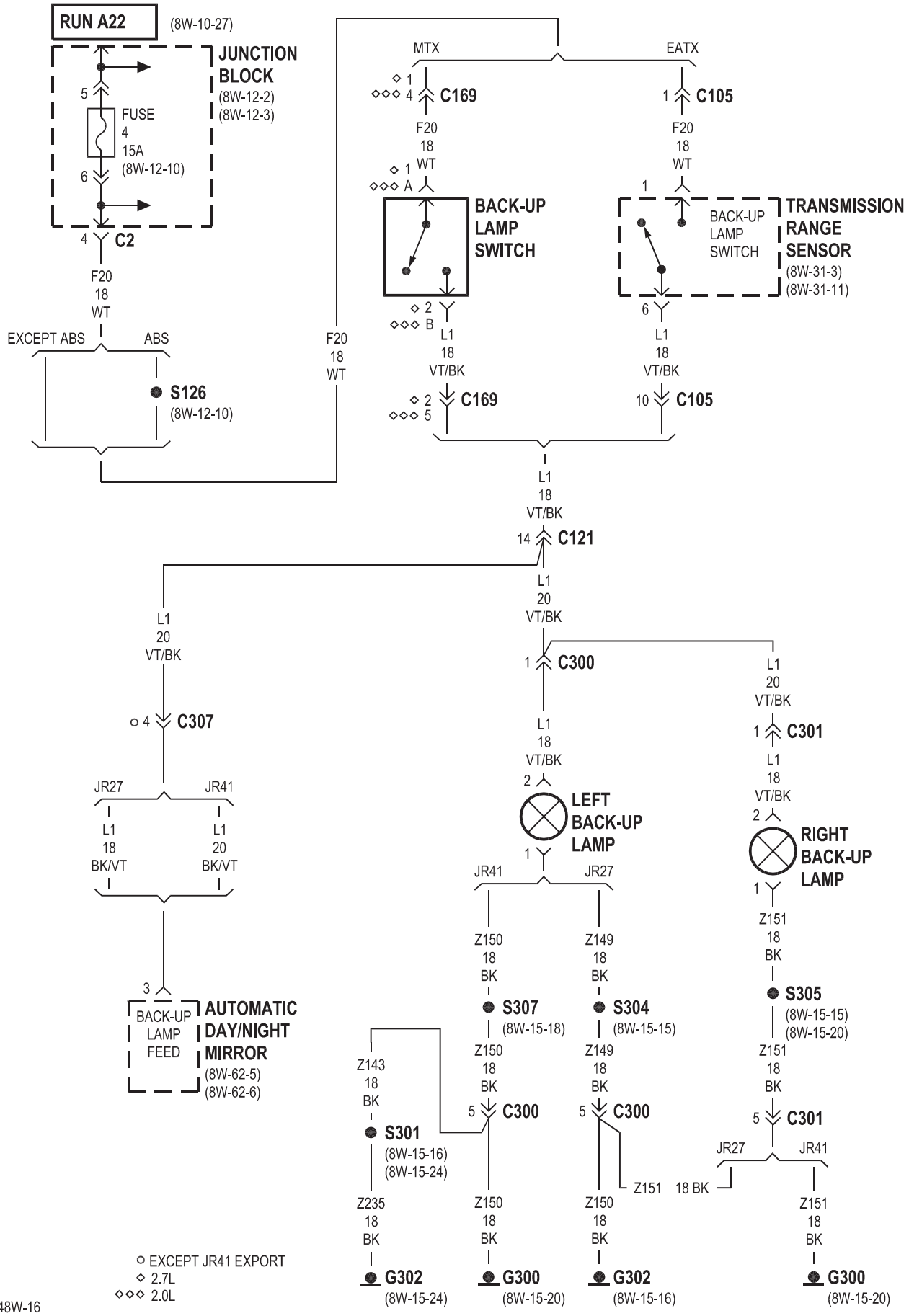
RUN A22
(8W-10-27)
JUNCTION BLOCK
(8W-12-2)
(8W-12-3)
5
FUSE 4 15A
(8W-12-10)
6
4
C2
F20 18 WT
EXCEPT ABS
ABS
S126
(8W-12-10)
F20 18 WT
MTX
EATX
1
4
C169
1
C105
F20 18 WT
F20 18 WT
1
A
BACK-UP LAMP SWITCH
1
BACK-UP LAMP SWITCH
TRANSMISSION RANGE SENSOR
(8W-31-3)
(8W-31-11)
2
B
6
L1 18 VT/BK
L1 18 VT/BK
2
5
C169
10
C105
L1 18 VT/BK
14
C121
L1 20 VT/BK
L1 20 VT/BK
4
C307
1
C300
L1 20 VT/BK
1
C301
L1 18 VT/BK
L1 18 VT/BK
2
LEFT BACK-UP LAMP
1
L1 18 VT/BK
2
RIGHT BACK-UP LAMP
1
JR27
JR41
L1 18 BK/VT
L1 20 BK/VT
JR41
JR27
Z150 18 BK
Z149 18 BK
Z151 18 BK
3
BACK-UP LAMP FEED
AUTOMATIC DAY/NIGHT MIRROR
(8W-62-5)
(8W-62-6)
S307
(8W-15-18)
S304
(8W-15-15)
S305
(8W-15-15)
(8W-15-20)
Z143 18 BK
Z150 18 BK
Z149 18 BK
Z151 18 BK
5
C300
5
C300
5
C301
S301
(8W-15-16)
(8W-15-24)
JR27
JR41
Z151
18 BK
Z235 18 BK
Z150 18 BK
Z150 18 BK
Z151 18 BK
EXCEPT JR41 EXPORT
2.7L
2.0L
G302
(8W-15-24)
G300
(8W-15-20)
G302
(8W-15-16)
G300
(8W-15-20)

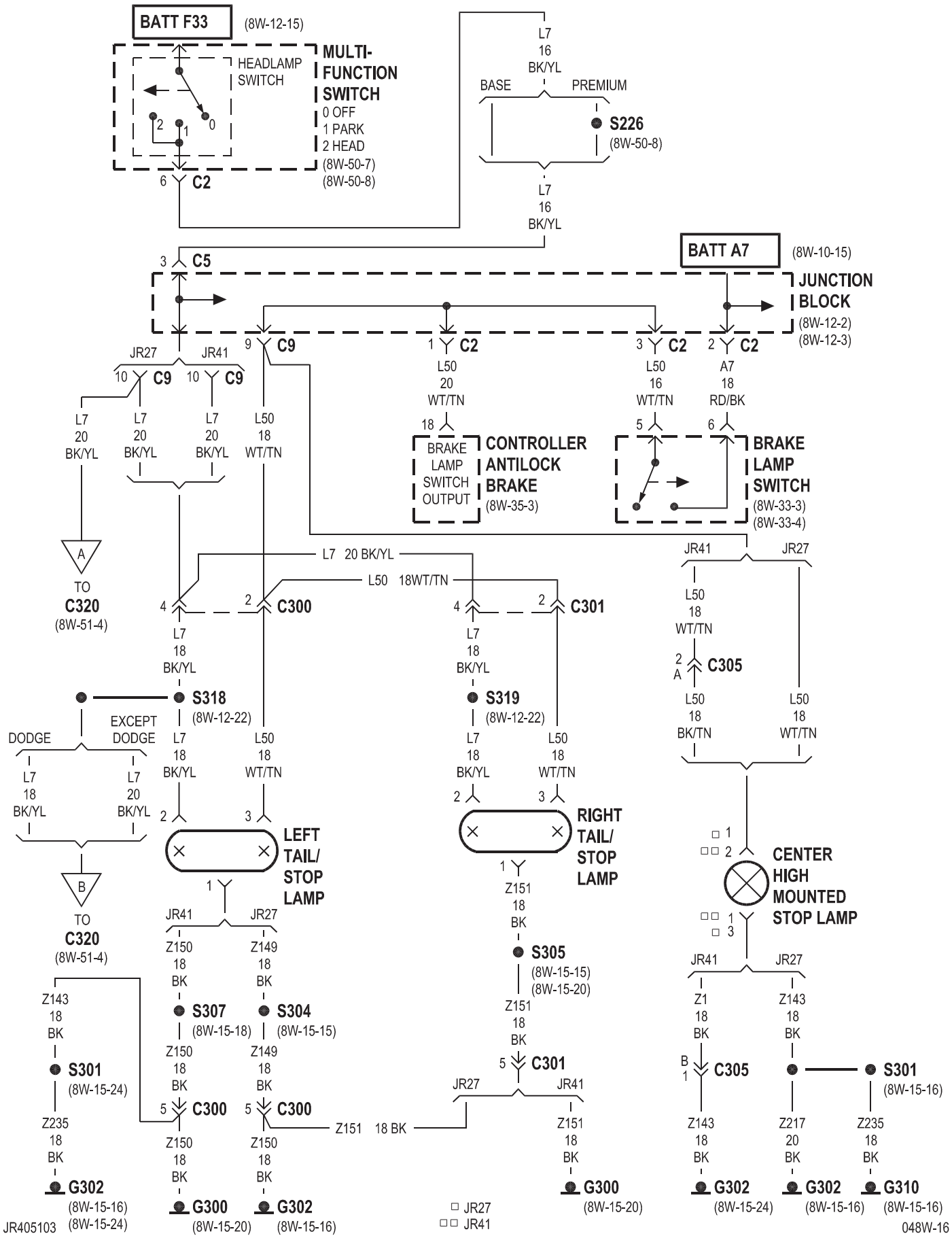
BATT F33
(8W-12-15)
HEADLAMP SWITCH
MULTI-FUNCTION SWITCH
0 OFF
1 PARK
2 HEAD
(8W-50-7)
(8W-50-8)
6 C2
L7 16 BK/YL
BASE
PREMIUM
S226
(8W-50-8)
L7 16 BK/YL
3 C5
BATT A7
(8W-10-15)
JUNCTION BLOCK
(8W-12-2)
(8W-12-3)
9 C9
1 C2
3 C2
2 C2
JR27
JR41
10 C9
10 C9
L7 20 BK/YL
L7 20 BK/YL
L7 20 BK/YL
L50 18 WT/TN
L50 20 WT/TN
L50 16 WT/TN
A7 18 RD/BK
18
BRAKE LAMP SWITCH OUTPUT
CONTROLLER ANTILOCK BRAKE
(8W-35-3)
5
6
BRAKE LAMP SWITCH
(8W-33-3)
(8W-33-4)
A
TO C320
(8W-51-4)
L7 20 BK/YL
L50 18WT/TN
4
2
C300
4
2
C301
JR41
JR27
L50 18 WT/TN
2 A
C305
L7 18 BK/YL
S318
(8W-12-22)
L7 18 BK/YL
S319
(8W-12-22)
L50 18 BK/TN
L50 18 WT/TN
DODGE
EXCEPT DODGE
L7 18 BK/YL
L7 20 BK/YL
L7 18 BK/YL
L50 18 WT/TN
L7 18 BK/YL
L50 18 WT/TN
2
3
2
3
LEFT TAIL/ STOP LAMP
RIGHT TAIL/ STOP LAMP
1
1
2
CENTER HIGH MOUNTED STOP LAMP
1
3
B
TO C320
(8W-51-4)
JR41
JR27
Z150 18 BK
Z149 18 BK
Z151 18 BK
S305
(8W-15-15)
(8W-15-20)
JR41
JR27
Z1 18 BK
Z143 18 BK
Z143 18 BK
S307
(8W-15-18)
S304
(8W-15-15)
Z151 18 BK
B 1
C305
S301
(8W-15-16)
S301
(8W-15-24)
Z150 18 BK
Z149 18 BK
5 C301
5 C300
5 C300
JR27
JR41
Z235 18 BK
Z150 18 BK
Z150 18 BK
Z151 18 BK
Z151 18 BK
Z143 18 BK
Z217 20 BK
Z235 18 BK
G302
(8W-15-16)
(8W-15-24)
G300
(8W-15-20)
G302
(8W-15-16)
G300
(8W-15-20)
JR27
JR41
G302
(8W-15-24)
G302
(8W-15-16)
G310
(8W-15-16)
JR405103
048W-16

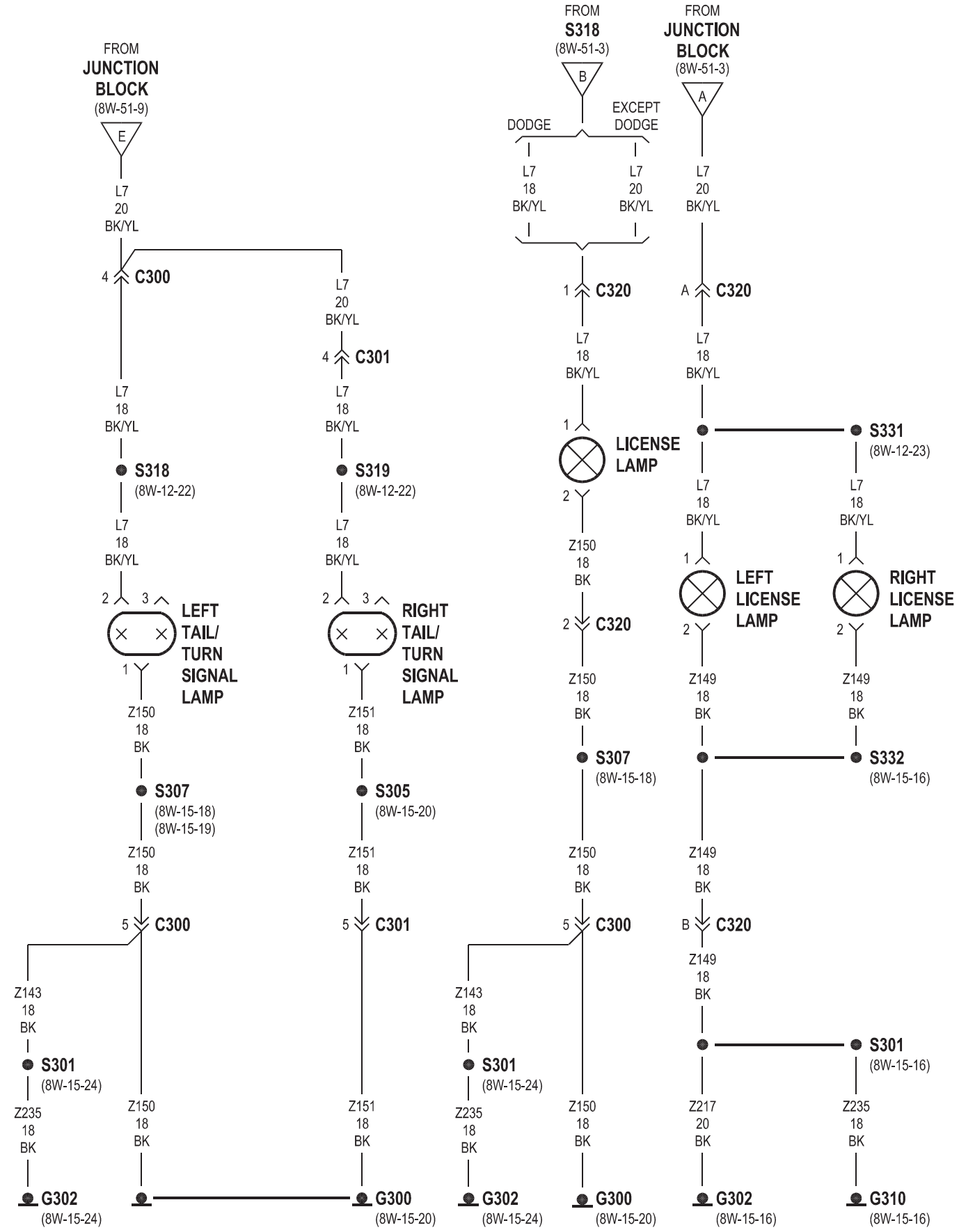
FROM JUNCTION BLOCK (8W-51-9)
E
L7 20 BK/YL
4 C300
L7 20 BK/YL
4 C301
L7 18 BK/YL
S318 (8W-12-22)
L7 18 BK/YL
S319 (8W-12-22)
L7 18 BK/YL
2 3 LEFT TAIL/ TURN SIGNAL LAMP 1
2 3 RIGHT TAIL/ TURN SIGNAL LAMP 1
Z150 18 BK
S307 (8W-15-18) (8W-15-19)
Z151 18 BK
S305 (8W-15-20)
Z150 18 BK
5 C300
Z151 18 BK
5 C301
Z143 18 BK
S301 (8W-15-24)
Z235 18 BK
G302 (8W-15-24)
Z150 18 BK
G300 (8W-15-20)
Z151 18 BK
FROM S318 (8W-51-3)
B
DODGE
EXCEPT DODGE
L7 18 BK/YL
L7 20 BK/YL
1 C320
L7 18 BK/YL
1 LICENSE LAMP 2
Z150 18 BK
2 C320
Z150 18 BK
S307 (8W-15-18)
Z150 18 BK
5 C300
Z143 18 BK
S301 (8W-15-24)
Z235 18 BK
G302 (8W-15-24)
Z150 18 BK
G300 (8W-15-20)
FROM JUNCTION BLOCK (8W-51-3)
A
L7 20 BK/YL
A C320
L7 18 BK/YL
S331 (8W-12-23)
L7 18 BK/YL
L7 18 BK/YL
1 LEFT LICENSE LAMP 2
1 RIGHT LICENSE LAMP 2
Z149 18 BK
Z149 18 BK
S332 (8W-15-16)
Z149 18 BK
B C320
Z149 18 BK
S301 (8W-15-16)
Z217 20 BK
Z235 18 BK
G302 (8W-15-16)
G310 (8W-15-16)

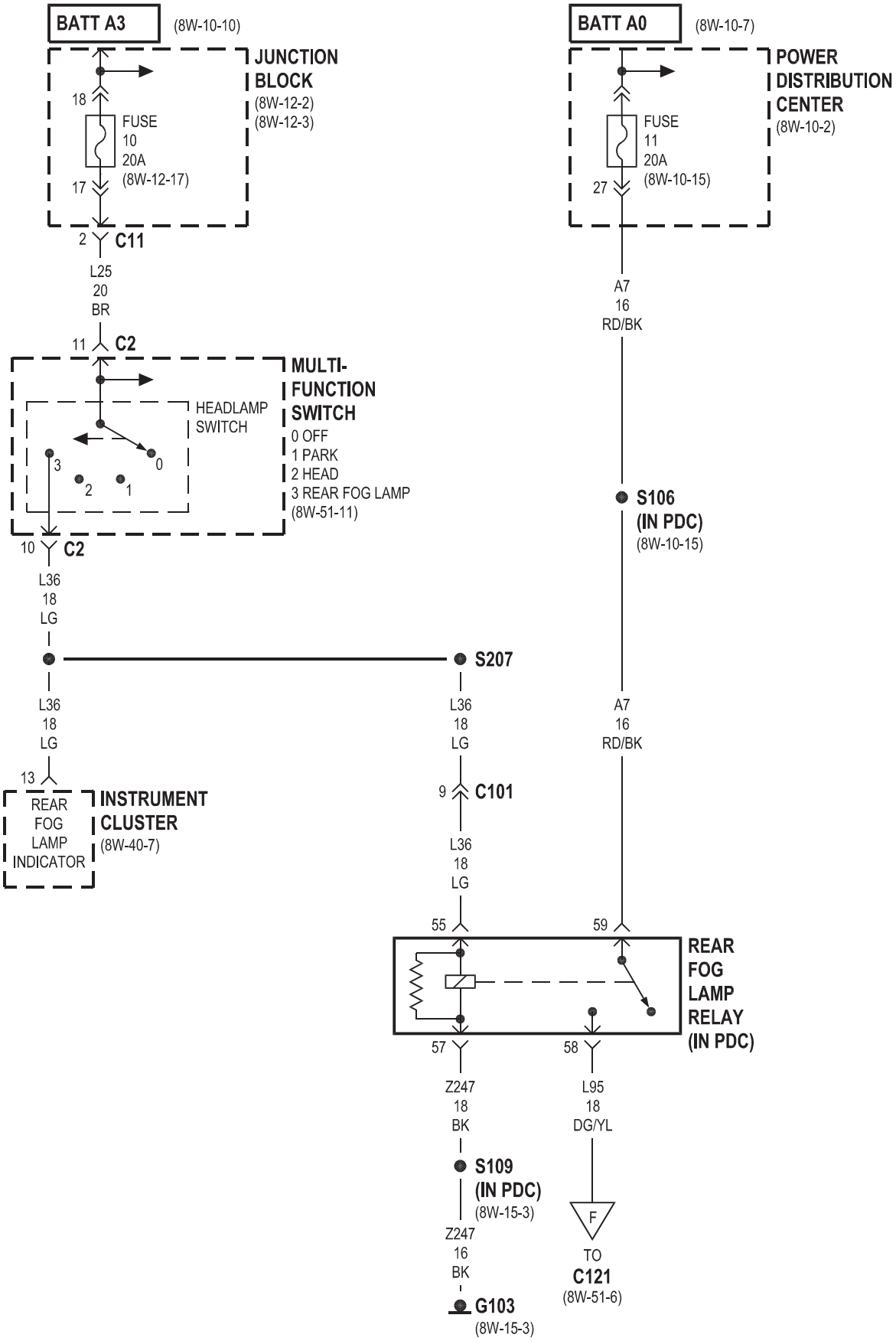
BATT A3
(8W-10-10)
JUNCTION BLOCK
(8W-12-2)
(8W-12-3)
18
FUSE
10
20A
(8W-12-17)
17
2
C11
L25
20
BR
11
C2
MULTI-FUNCTION SWITCH
HEADLAMP SWITCH
0 OFF
1 PARK
2 HEAD
3 REAR FOG LAMP
(8W-51-11)
3
2
1
0
10
C2
L36
18
LG
S207
L36
18
LG
13
REAR FOG LAMP INDICATOR
INSTRUMENT CLUSTER
(8W-40-7)
L36
18
LG
9
C101
L36
18
LG
55
57
Z247
18
BK
S109
(IN PDC)
(8W-15-3)
Z247
16
BK
G103
(8W-15-3)
BATT A0
(8W-10-7)
POWER DISTRIBUTION CENTER
(8W-10-2)
FUSE
11
20A
(8W-10-15)
27
A7
16
RD/BK
S106
(IN PDC)
(8W-10-15)
A7
16
RD/BK
59
REAR FOG LAMP RELAY
(IN PDC)
58
L95
18
DG/YL
F
TO
C121
(8W-51-6)

JR27 EXPORT

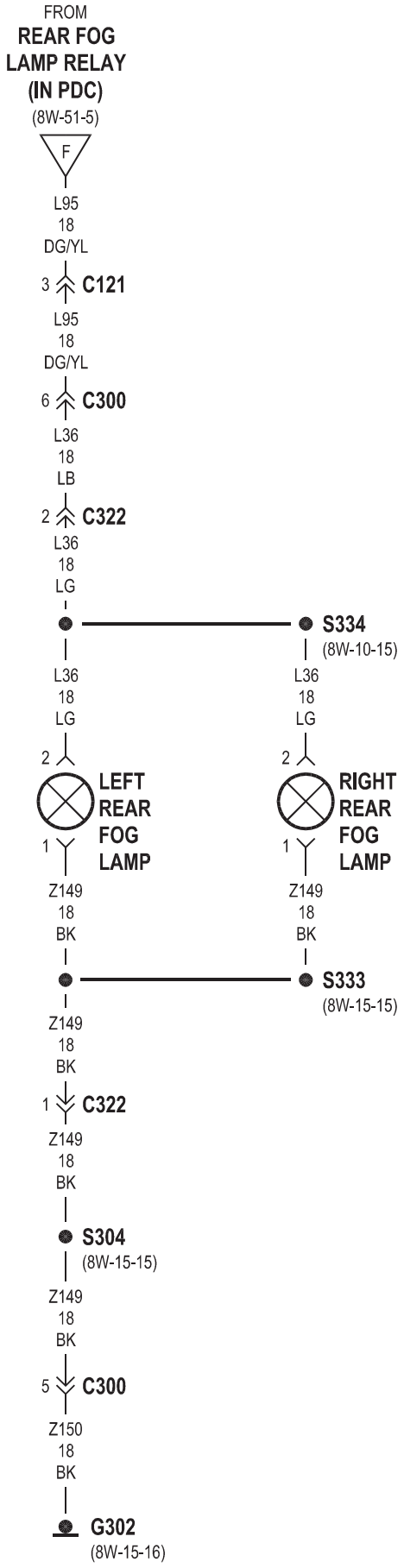
FROM
REAR FOG
LAMP RELAY
(IN PDC)
(8W-51-5)
F
L95
18
DG/YL
3
C121
L95
18
DG/YL
6
C300
L36
18
LB
2
C322
L36
18
LG
S334
(8W-10-15)
L36
18
LG
L36
18
LG
2
2
LEFT
REAR
FOG
LAMP
RIGHT
REAR
FOG
LAMP
1
1
Z149
18
BK
Z149
18
BK
S333
(8W-15-15)
Z149
18
BK
1
C322
Z149
18
BK
S304
(8W-15-15)
Z149
18
BK
5
C300
Z150
18
BK
G302
(8W-15-16)

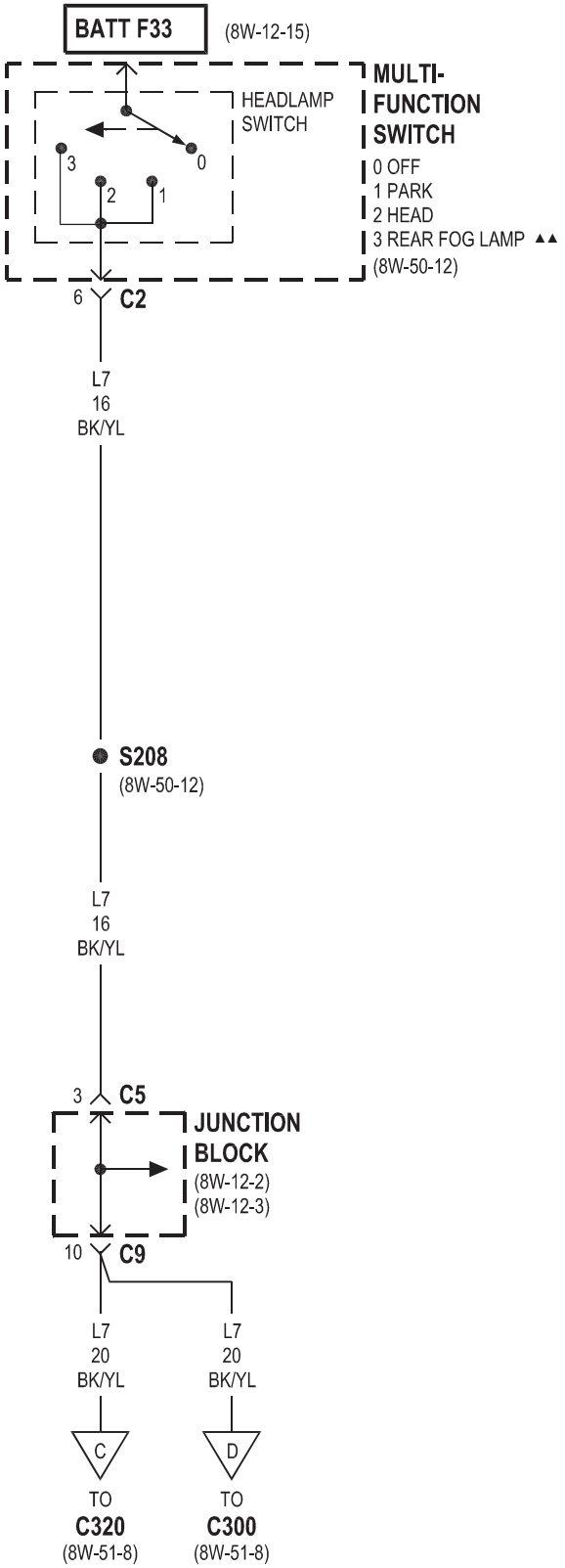
BATT F33
(8W-12-15)
MULTI-
FUNCTION
SWITCH
HEADLAMP
SWITCH
3
0
2
1
0 OFF
1 PARK
2 HEAD
3 REAR FOG LAMP ▲▲
(8W-50-12)
6
C2
L7
16
BK/YL
S208
(8W-50-12)
L7
16
BK/YL
3
C5
JUNCTION
BLOCK
(8W-12-2)
(8W-12-3)
10
C9
L7
20
BK/YL
L7
20
BK/YL
C
D
TO
C320
(8W-51-8)
TO
C300
(8W-51-8)

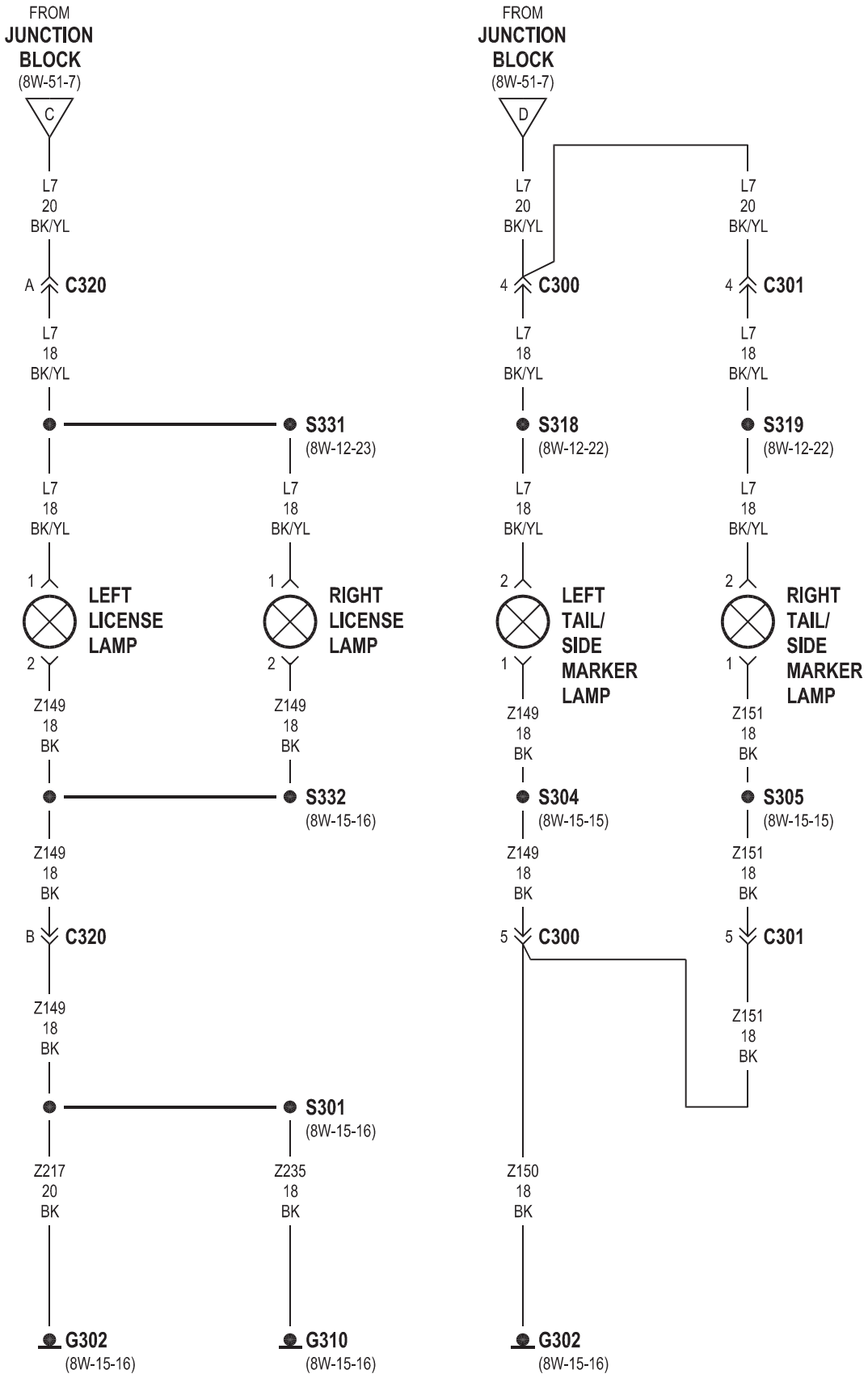
FROM
JUNCTION
BLOCK
(8W-51-7)
C
L7
20
BK/YL
A
C320
L7
18
BK/YL
S331
(8W-12-23)
L7
18
BK/YL
L7
18
BK/YL
1
LEFT
LICENSE
LAMP
2
1
RIGHT
LICENSE
LAMP
2
Z149
18
BK
Z149
18
BK
S332
(8W-15-16)
Z149
18
BK
B
C320
Z149
18
BK
S301
(8W-15-16)
Z217
20
BK
Z235
18
BK
G302
(8W-15-16)
G310
(8W-15-16)
FROM
JUNCTION
BLOCK
(8W-51-7)
D
L7
20
BK/YL
L7
20
BK/YL
4
C300
4
C301
L7
18
BK/YL
L7
18
BK/YL
S318
(8W-12-22)
S319
(8W-12-22)
L7
18
BK/YL
L7
18
BK/YL
2
LEFT
TAIL/
SIDE
MARKER
LAMP
1
2
RIGHT
TAIL/
SIDE
MARKER
LAMP
1
Z149
18
BK
Z151
18
BK
S304
(8W-15-15)
S305
(8W-15-15)
Z149
18
BK
Z151
18
BK
5
C300
5
C301
Z151
18
BK
Z150
18
BK
G302
(8W-15-16)

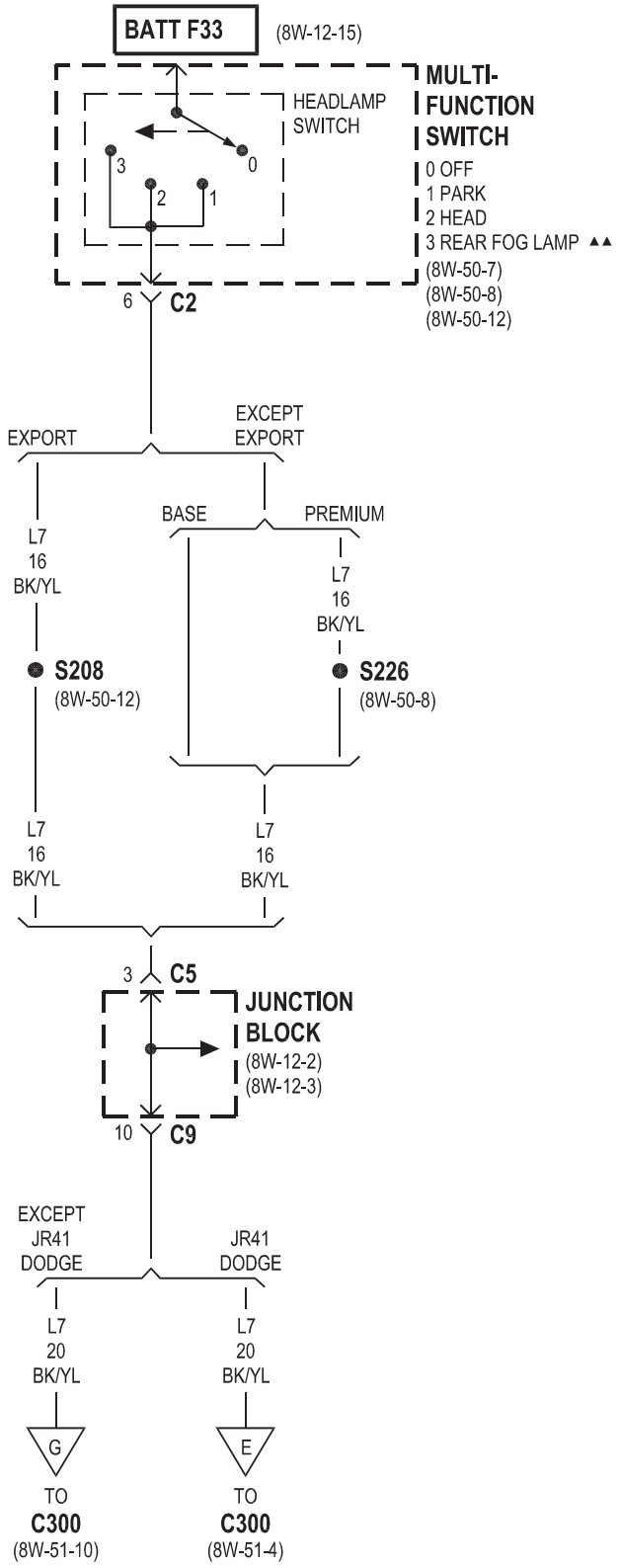
BATT F33
(8W-12-15)
MULTI-
FUNCTION
SWITCH
HEADLAMP
SWITCH
3
0
2
1
0 OFF
1 PARK
2 HEAD
3 REAR FOG LAMP ▲▲
(8W-50-7)
(8W-50-8)
(8W-50-12)
6
C2
EXPORT
EXCEPT
EXPORT
BASE
PREMIUM
L7
16
BK/YL
L7
16
BK/YL
S208
(8W-50-12)
S226
(8W-50-8)
L7
16
BK/YL
L7
16
BK/YL
3
C5
JUNCTION
BLOCK
(8W-12-2)
(8W-12-3)
10
C9
EXCEPT
JR41
DODGE
JR41
DODGE
L7
20
BK/YL
L7
20
BK/YL
G
E
TO
C300
(8W-51-10)
TO
C300
(8W-51-4)

JR41 EXPORT

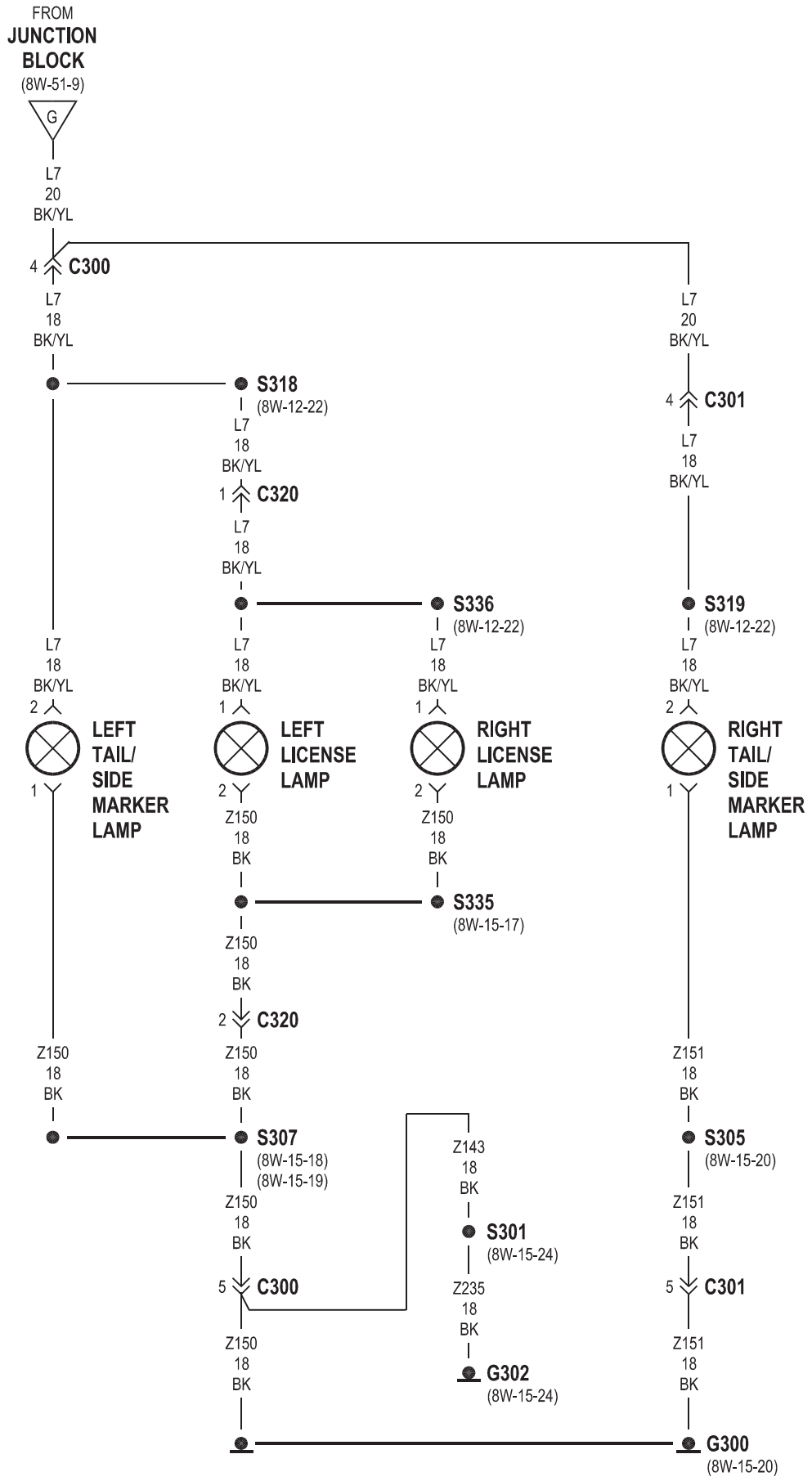
FROM
JUNCTION
BLOCK
(8W-51-9)
G
L7
20
BK/YL
4
C300
L7
18
BK/YL
S318
(8W-12-22)
L7
18
BK/YL
1
C320
L7
18
BK/YL
S336
(8W-12-22)
L7
20
BK/YL
4
C301
L7
18
BK/YL
S319
(8W-12-22)
L7
18
BK/YL
2
LEFT
TAIL/
SIDE
MARKER
LAMP
1
L7
18
BK/YL
1
LEFT
LICENSE
LAMP
2
Z150
18
BK
L7
18
BK/YL
1
RIGHT
LICENSE
LAMP
2
Z150
18
BK
L7
18
BK/YL
2
RIGHT
TAIL/
SIDE
MARKER
LAMP
1
S335
(8W-15-17)
Z150
18
BK
2
C320
Z150
18
BK
Z150
18
BK
Z151
18
BK
S307
(8W-15-18)
(8W-15-19)
Z150
18
BK
5
C300
Z150
18
BK
Z143
18
BK
S301
(8W-15-24)
Z235
18
BK
G302
(8W-15-24)
S305
(8W-15-20)
Z151
18
BK
5
C301
Z151
18
BK
G300
(8W-15-20)

JR41 EXPORT

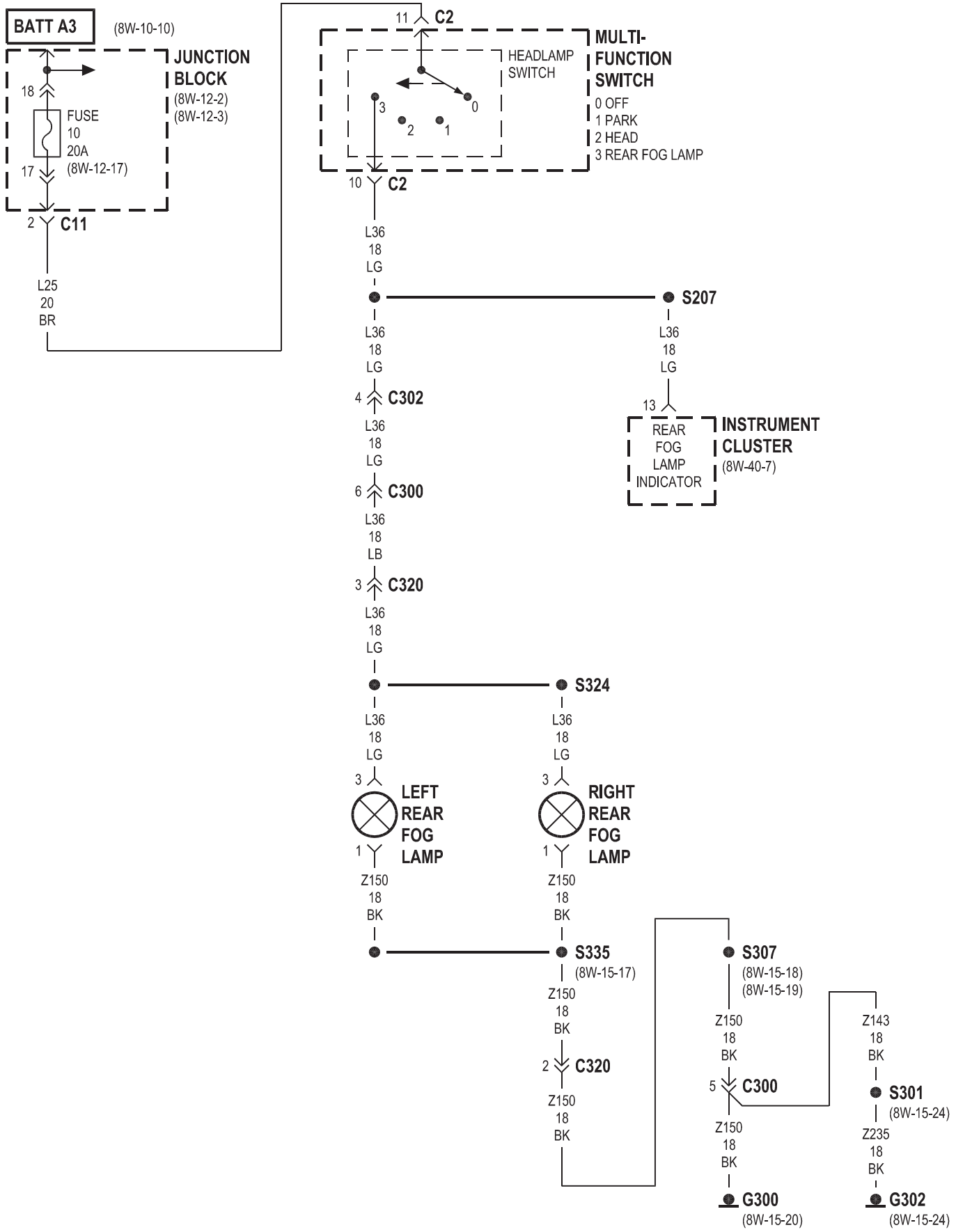
BATT A3
(8W-10-10)
JUNCTION BLOCK
(8W-12-2)
(8W-12-3)
18
FUSE 10 20A
(8W-12-17)
17
2
C11
L25 20 BR
11
C2
MULTI-FUNCTION SWITCH
HEADLAMP SWITCH
0 OFF
1 PARK
2 HEAD
3 REAR FOG LAMP
10
C2
L36 18 LG
S207
L36 18 LG
4
C302
L36 18 LG
6
C300
L36 18 LB
3
C320
L36 18 LG
13
REAR FOG LAMP INDICATOR
INSTRUMENT CLUSTER
(8W-40-7)
S324
L36 18 LG
3
LEFT REAR FOG LAMP
1
Z150 18 BK
RIGHT REAR FOG LAMP
S335
(8W-15-17)
Z150 18 BK
2
C320
S307
(8W-15-18)
(8W-15-19)
5
C300
G300
(8W-15-20)
Z143 18 BK
S301
(8W-15-24)
Z235 18 BK
G302
(8W-15-24)

8W-52 TURN SIGNALS

Component	Page
Combination Flasher	8W-52-2
Fuse 15	8W-52-2
Fuse 20	8W-52-2
G106	8W-52-3, 4
G108	8W-52-3, 4
G203	8W-52-2
G300	8W-52-3
G302	8W-52-3
Junction Block	8W-52-2, 3, 4
Left Lavalier Module	8W-52-2, 4
Left Park/Turn Signal Lamp	8W-52-2, 3
Left Tail/Turn Signal Lamp	8W-52-3
Left Turn Lamp	8W-52-3
Multi-Function Switch	8W-52-2
Power Distribution Center	8W-52-2
Right Lavalier Module	8W-52-2, 4
Right Park/Turn Signal Lamp	8W-52-2, 3
Right Tail/Turn Signal Lamp	8W-52-3
Right Turn Lamp	8W-52-3

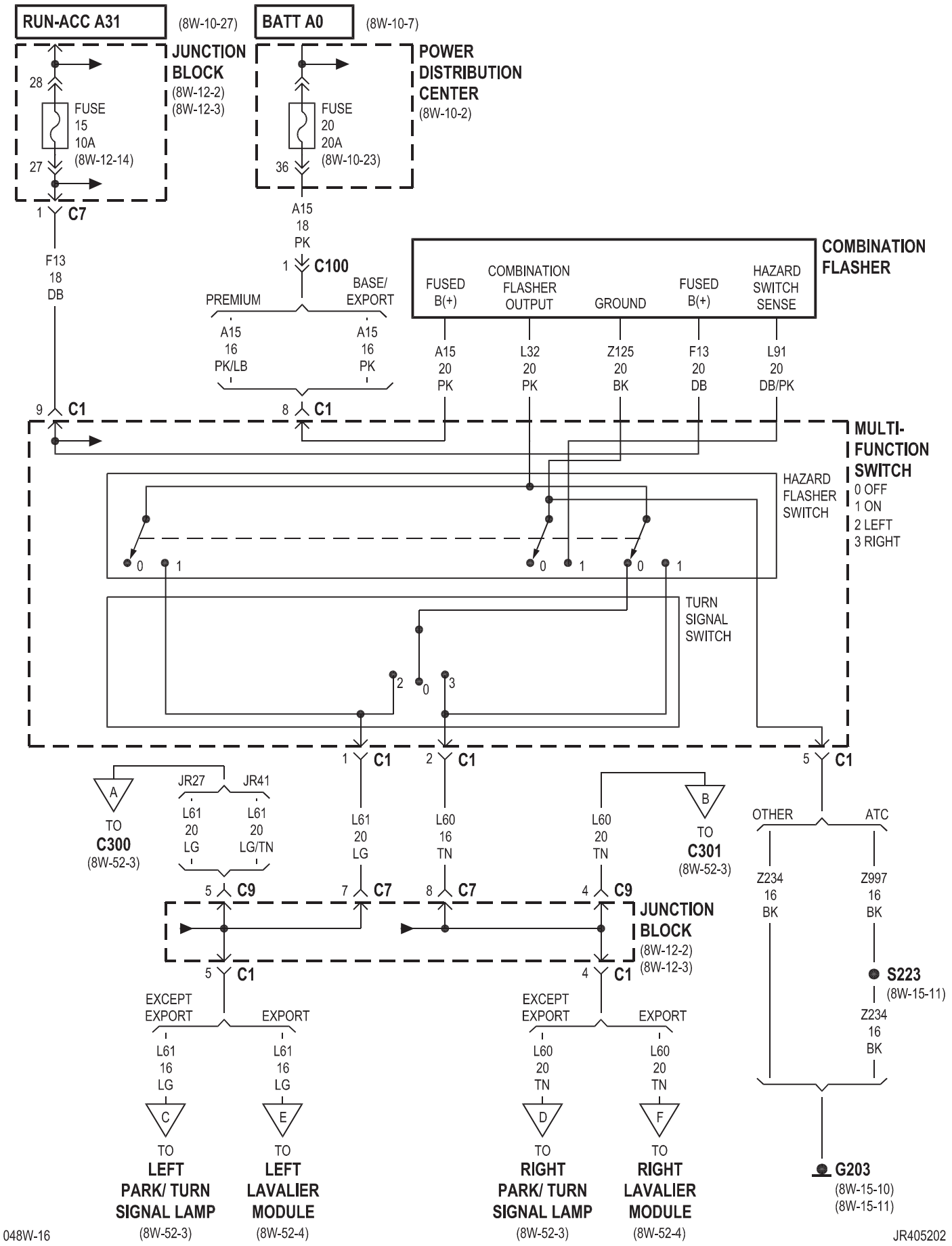
RUN-ACC A31
(8W-10-27)
BATT A0
(8W-10-7)
JUNCTION BLOCK
(8W-12-2)
(8W-12-3)
POWER DISTRIBUTION CENTER
(8W-10-2)
28
FUSE 15 10A
(8W-12-14)
27
FUSE 20 20A
(8W-10-23)
36
1 C7
A15 18 PK
1 C100
F13 18 DB
PREMIUM
BASE/ EXPORT
A15 16 PK/LB
A15 16 PK
COMBINATION FLASHER
FUSED B(+)
COMBINATION FLASHER OUTPUT
GROUND
FUSED B(+)
HAZARD SWITCH SENSE
A15 20 PK
L32 20 PK
Z125 20 BK
F13 20 DB
L91 20 DB/PK
9 C1
8 C1
MULTI-FUNCTION SWITCH
0 OFF
1 ON
2 LEFT
3 RIGHT
HAZARD FLASHER SWITCH
TURN SIGNAL SWITCH
1 C1
2 C1
5 C1
A
TO C300
(8W-52-3)
JR27
JR41
L61 20 LG
L61 20 LG/TN
L61 20 LG
L60 16 TN
L60 20 TN
B
TO C301
(8W-52-3)
OTHER
ATC
Z234 16 BK
Z997 16 BK
5 C9
7 C7
8 C7
4 C9
JUNCTION BLOCK
(8W-12-2)
(8W-12-3)
5 C1
4 C1
S223
(8W-15-11)
Z234 16 BK
EXCEPT EXPORT
EXPORT
L61 16 LG
L61 16 LG
L60 20 TN
L60 20 TN
C
E
D
F
TO LEFT PARK/ TURN SIGNAL LAMP
(8W-52-3)
TO LEFT LAVALIER MODULE
(8W-52-4)
TO RIGHT PARK/ TURN SIGNAL LAMP
(8W-52-3)
TO RIGHT LAVALIER MODULE
(8W-52-4)
G203
(8W-15-10)
(8W-15-11)

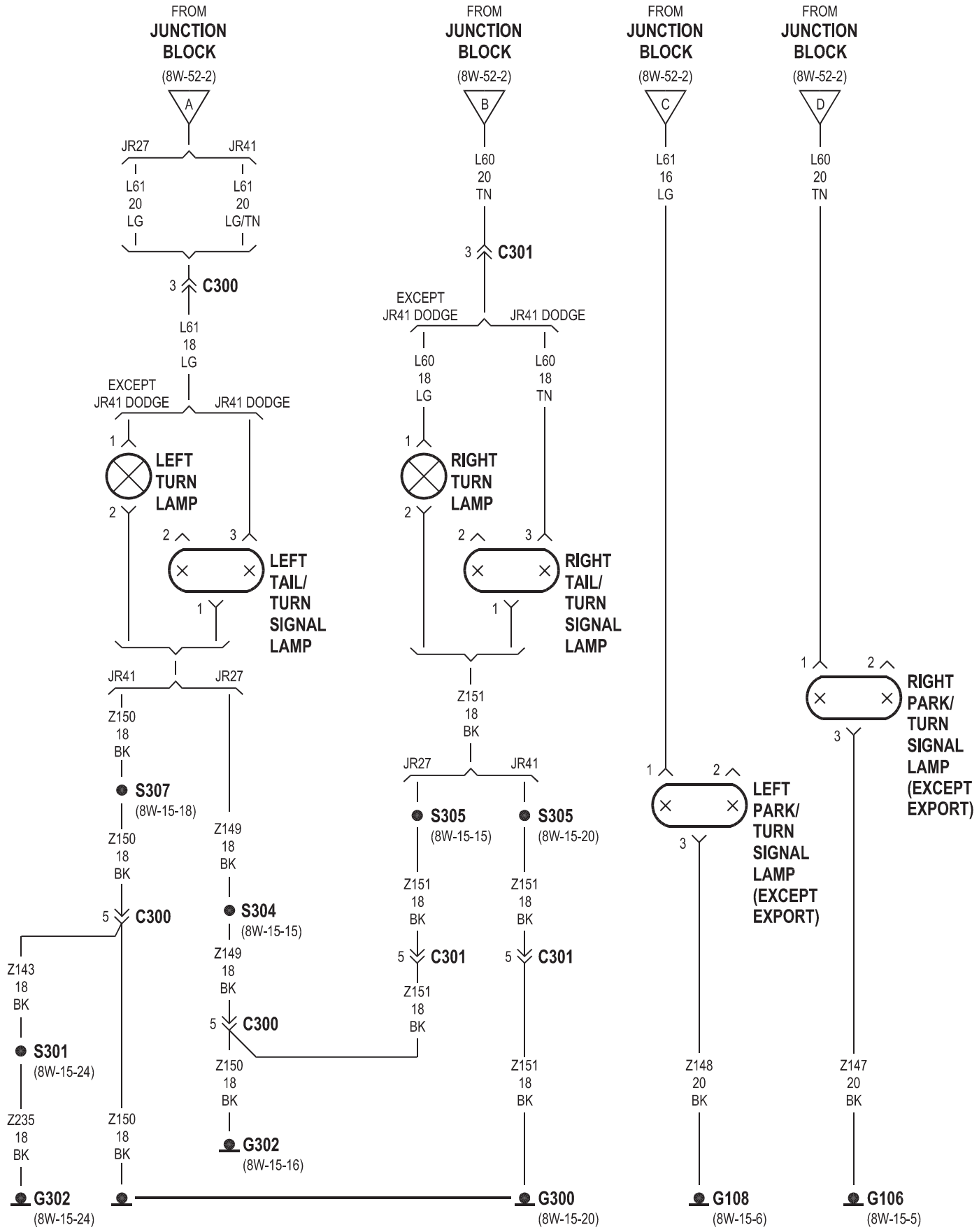
FROM JUNCTION BLOCK (8W-52-2)
A
JR27
JR41
L61 20 LG
L61 20 LG/TN
3 C300
L61 18 LG
EXCEPT JR41 DODGE
JR41 DODGE
1
LEFT TURN LAMP
2
2
3
LEFT TAIL/ TURN SIGNAL LAMP
1
JR41
JR27
Z150 18 BK
S307 (8W-15-18)
Z150 18 BK
5 C300
Z143 18 BK
S301 (8W-15-24)
Z235 18 BK
G302 (8W-15-24)
Z150 18 BK
Z149 18 BK
S304 (8W-15-15)
Z149 18 BK
5 C300
Z150 18 BK
G302 (8W-15-16)
FROM JUNCTION BLOCK (8W-52-2)
B
L60 20 TN
3 C301
EXCEPT JR41 DODGE
JR41 DODGE
L60 18 LG
L60 18 TN
1
RIGHT TURN LAMP
2
2
3
RIGHT TAIL/ TURN SIGNAL LAMP
1
Z151 18 BK
JR27
JR41
S305 (8W-15-15)
S305 (8W-15-20)
Z151 18 BK
Z151 18 BK
5 C301
5 C301
Z151 18 BK
Z151 18 BK
G300 (8W-15-20)
FROM JUNCTION BLOCK (8W-52-2)
C
L61 16 LG
1
2
LEFT PARK/ TURN SIGNAL LAMP (EXCEPT EXPORT)
3
Z148 20 BK
G108 (8W-15-6)
FROM JUNCTION BLOCK (8W-52-2)
D
L60 20 TN
1
2
RIGHT PARK/ TURN SIGNAL LAMP (EXCEPT EXPORT)
3
Z147 20 BK
G106 (8W-15-5)

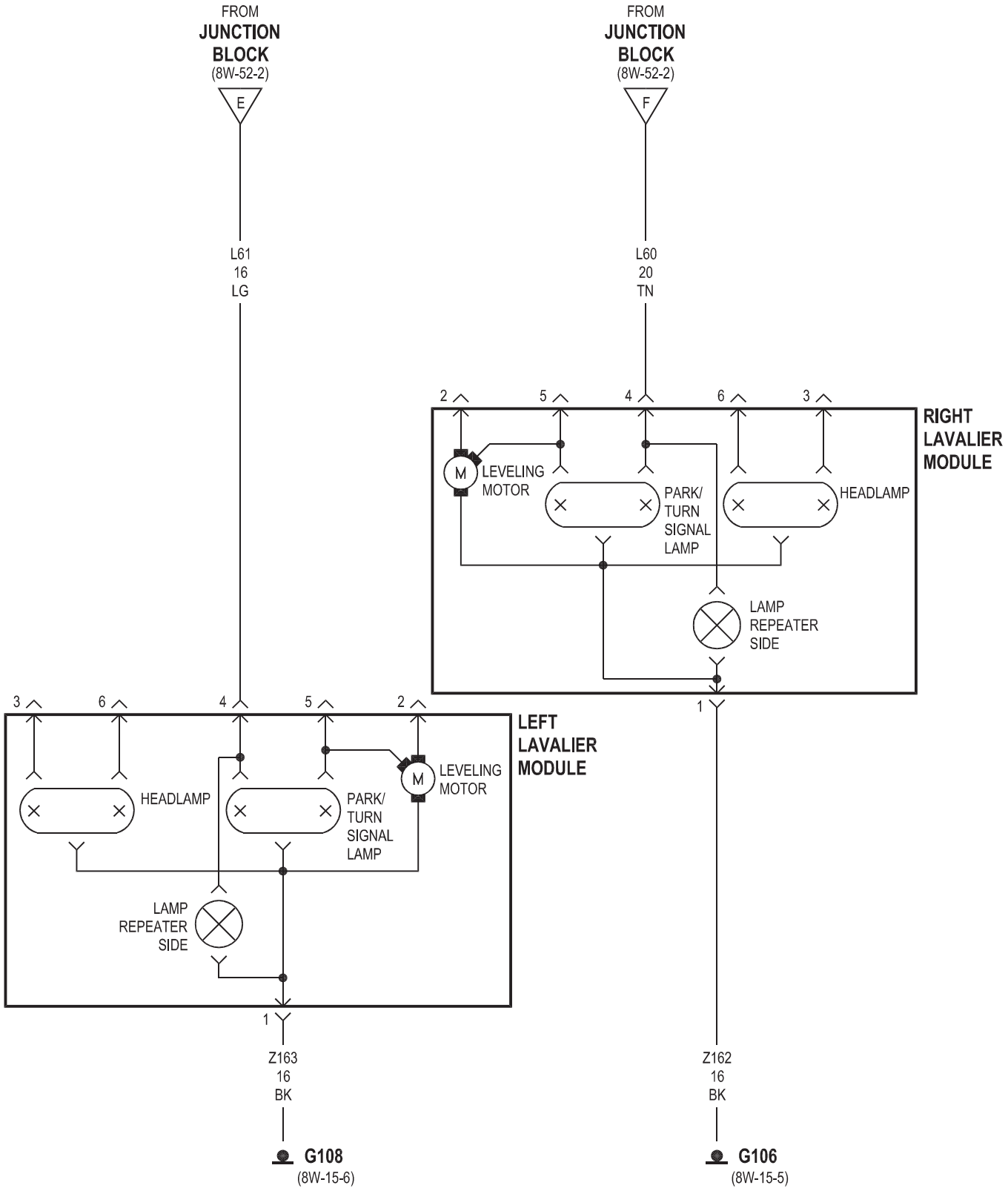
FROM
JUNCTION
BLOCK
(8W-52-2)
E
FROM
JUNCTION
BLOCK
(8W-52-2)
F
L61
16
LG
L60
20
TN
2
5
4
6
3
RIGHT
LAVALIER
MODULE
M
LEVELING
MOTOR
PARK/
TURN
SIGNAL
LAMP
HEADLAMP
LAMP
REPEATER
SIDE
1
3
6
4
5
2
LEFT
LAVALIER
MODULE
M
LEVELING
MOTOR
HEADLAMP
PARK/
TURN
SIGNAL
LAMP
LAMP
REPEATER
SIDE
1
Z163
16
BK
Z162
16
BK
G108
(8W-15-6)
G106
(8W-15-5)

8W-53 WIPERS

Component	Page
Body Control Module	8W-53-2, 3, 4
Front Washer Pump Motor	8W-53-2
Front Wiper High/Low Relay	8W-53-3
Front Wiper Motor	8W-53-3
Front Wiper On/Off Relay	8W-53-3
Fuse 15	8W-53-2, 3
Fuse 18	8W-53-3
Fuse 3	8W-53-4
G103	8W-53-3
G106	8W-53-2
G108	8W-53-2, 4
Headlamp Washer Pump Motor	8W-53-4
Headlamp Washer Relay	8W-53-4
Junction Block	8W-53-2, 3
Multi-Function Switch	8W-53-2
Power Distribution Center	8W-53-3, 4

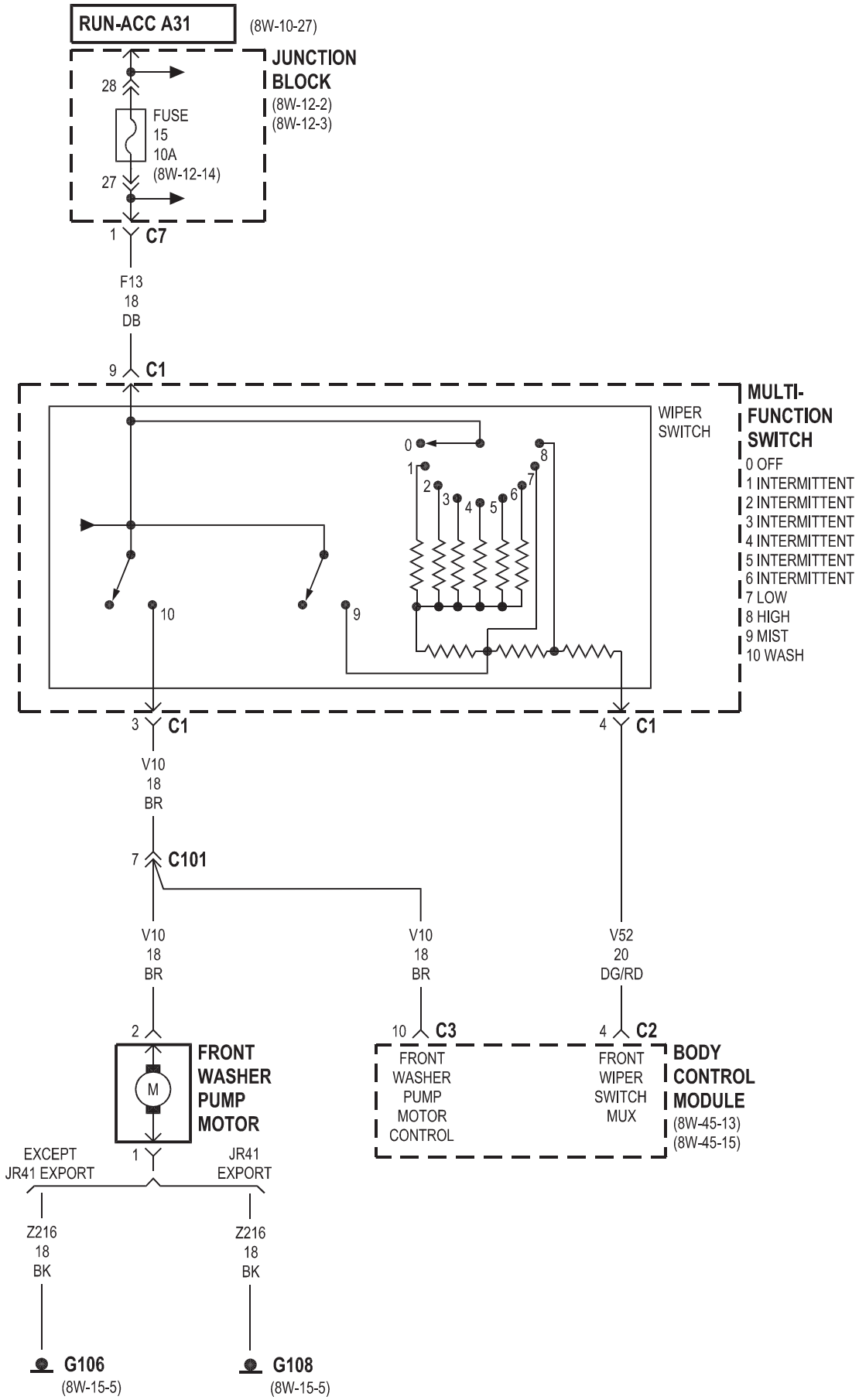
RUN-ACC A31
(8W-10-27)
JUNCTION BLOCK
(8W-12-2)
(8W-12-3)
28
FUSE
15
10A
(8W-12-14)
27
1
C7
F13
18
DB
9
C1
MULTI-FUNCTION SWITCH
WIPER SWITCH
0 OFF
1 INTERMITTENT
2 INTERMITTENT
3 INTERMITTENT
4 INTERMITTENT
5 INTERMITTENT
6 INTERMITTENT
7 LOW
8 HIGH
9 MIST
10 WASH
3
C1
4
C1
V10
18
BR
7
C101
V10
18
BR
V10
18
BR
V52
20
DG/RD
2
10
C3
4
C2
FRONT WASHER PUMP MOTOR
M
FRONT WASHER PUMP MOTOR CONTROL
FRONT WIPER SWITCH MUX
BODY CONTROL MODULE
(8W-45-13)
(8W-45-15)
1
EXCEPT JR41 EXPORT
JR41 EXPORT
Z216
18
BK
Z216
18
BK
G106
(8W-15-5)
G108
(8W-15-5)

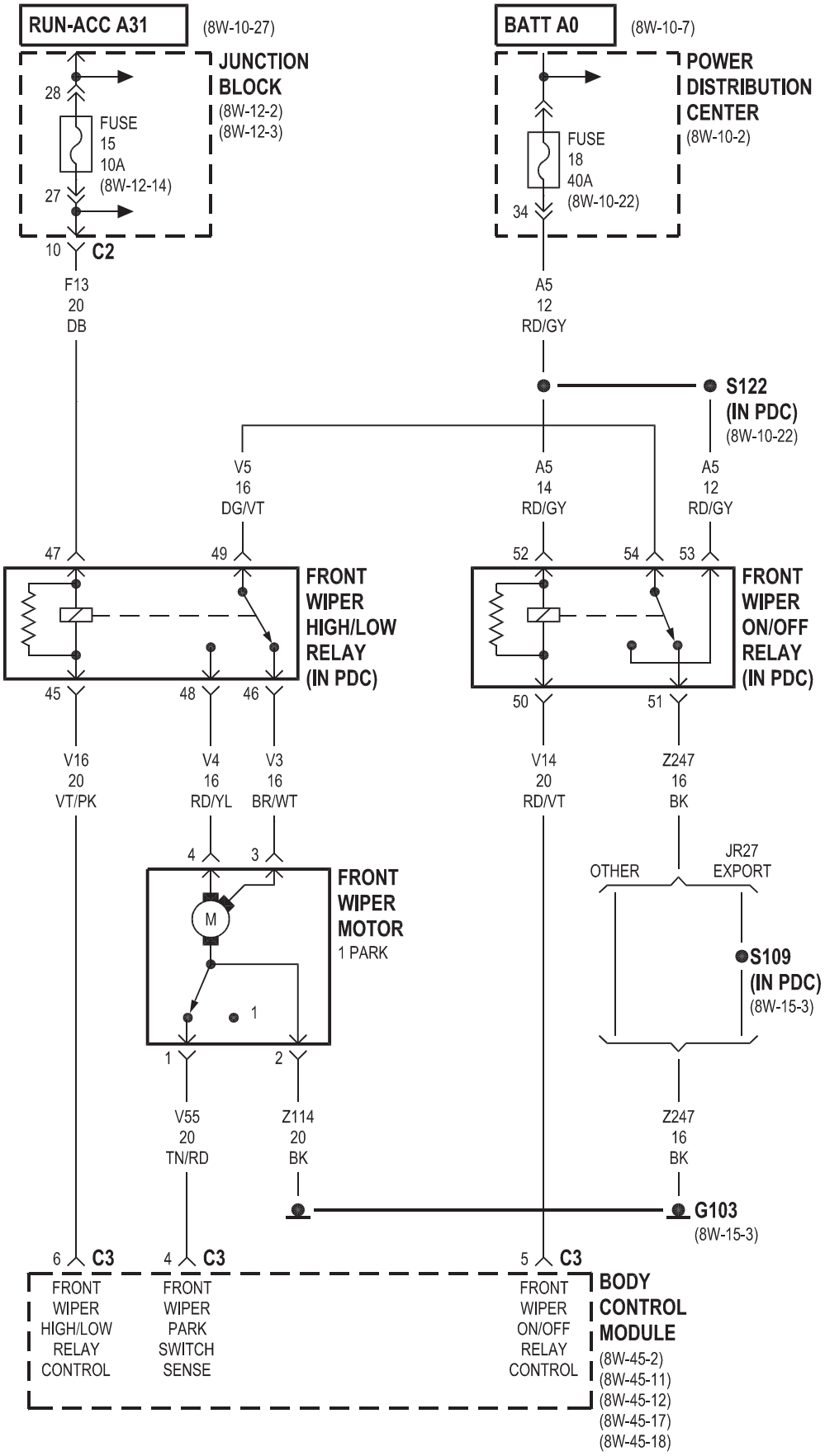
RUN-ACC A31
(8W-10-27)
JUNCTION BLOCK
(8W-12-2)
(8W-12-3)
28
FUSE 15 10A
(8W-12-14)
27
10
C2
F13 20 DB
BATT A0
(8W-10-7)
POWER DISTRIBUTION CENTER
(8W-10-2)
FUSE 18 40A
(8W-10-22)
34
A5 12 RD/GY
S122
(IN PDC)
(8W-10-22)
V5 16 DG/VT
A5 14 RD/GY
A5 12 RD/GY
47
49
52
54
53
FRONT WIPER HIGH/LOW RELAY (IN PDC)
FRONT WIPER ON/OFF RELAY (IN PDC)
45
48
46
50
51
V16 20 VT/PK
V4 16 RD/YL
V3 16 BR/WT
V14 20 RD/VT
Z247 16 BK
4
3
FRONT WIPER MOTOR
1 PARK
M
1
2
OTHER
JR27 EXPORT
S109
(IN PDC)
(8W-15-3)
V55 20 TN/RD
Z114 20 BK
Z247 16 BK
G103
(8W-15-3)
6
C3
4
C3
5
C3
FRONT WIPER HIGH/LOW RELAY CONTROL
FRONT WIPER PARK SWITCH SENSE
FRONT WIPER ON/OFF RELAY CONTROL
BODY CONTROL MODULE
(8W-45-2)
(8W-45-11)
(8W-45-12)
(8W-45-17)
(8W-45-18)

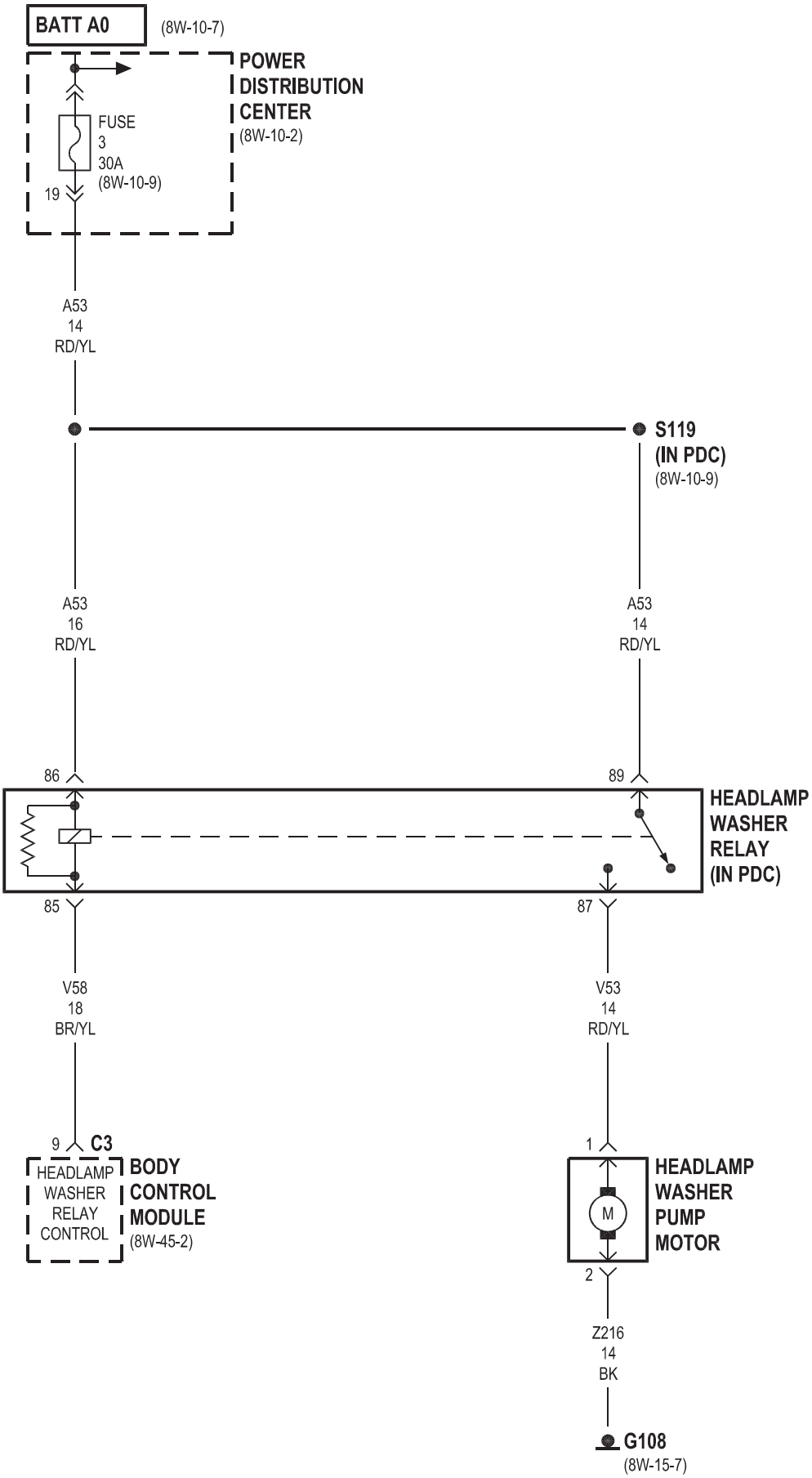
BATT A0
(8W-10-7)
POWER DISTRIBUTION CENTER
(8W-10-2)
FUSE
3
30A
(8W-10-9)
19
A53
14
RD/YL
S119
(IN PDC)
(8W-10-9)
A53
16
RD/YL
A53
14
RD/YL
86
89
HEADLAMP WASHER RELAY (IN PDC)
85
87
V58
18
BR/YL
V53
14
RD/YL
9
C3
HEADLAMP WASHER RELAY CONTROL
BODY CONTROL MODULE
(8W-45-2)
1
M
HEADLAMP WASHER PUMP MOTOR
2
Z216
14
BK
G108
(8W-15-7)

8W-60 POWER WINDOWS

Component	Page
Body Control Module	8W-60-6
Brake Transmission Shift Interlock Solenoid	8W-60-5
Circuit Breaker No. 2 (JB)	8W-60-2, 4, 6, 7
Compass/Mini-Trip Computer	8W-60-5
Driver Power Window Motor	8W-60-2, 4, 6
Fuse 4	8W-60-5
G203	8W-60-2, 4
Junction Block	8W-60-2, 3, 4, 5, 6, 7
Left Rear Power Window Motor	8W-60-3, 7
Left Rear Power Window Switch	8W-60-3
Master Power Window Switch	8W-60-2, 3, 4, 6
Passenger Power Window Motor	8W-60-2, 7
Passenger Power Window Switch	8W-60-2, 7
Right Rear Power Window Motor	8W-60-3, 7
Right Rear Power Window Switch	8W-60-3
Window Drop Relay Assembly	8W-60-4, 5, 6

JR41

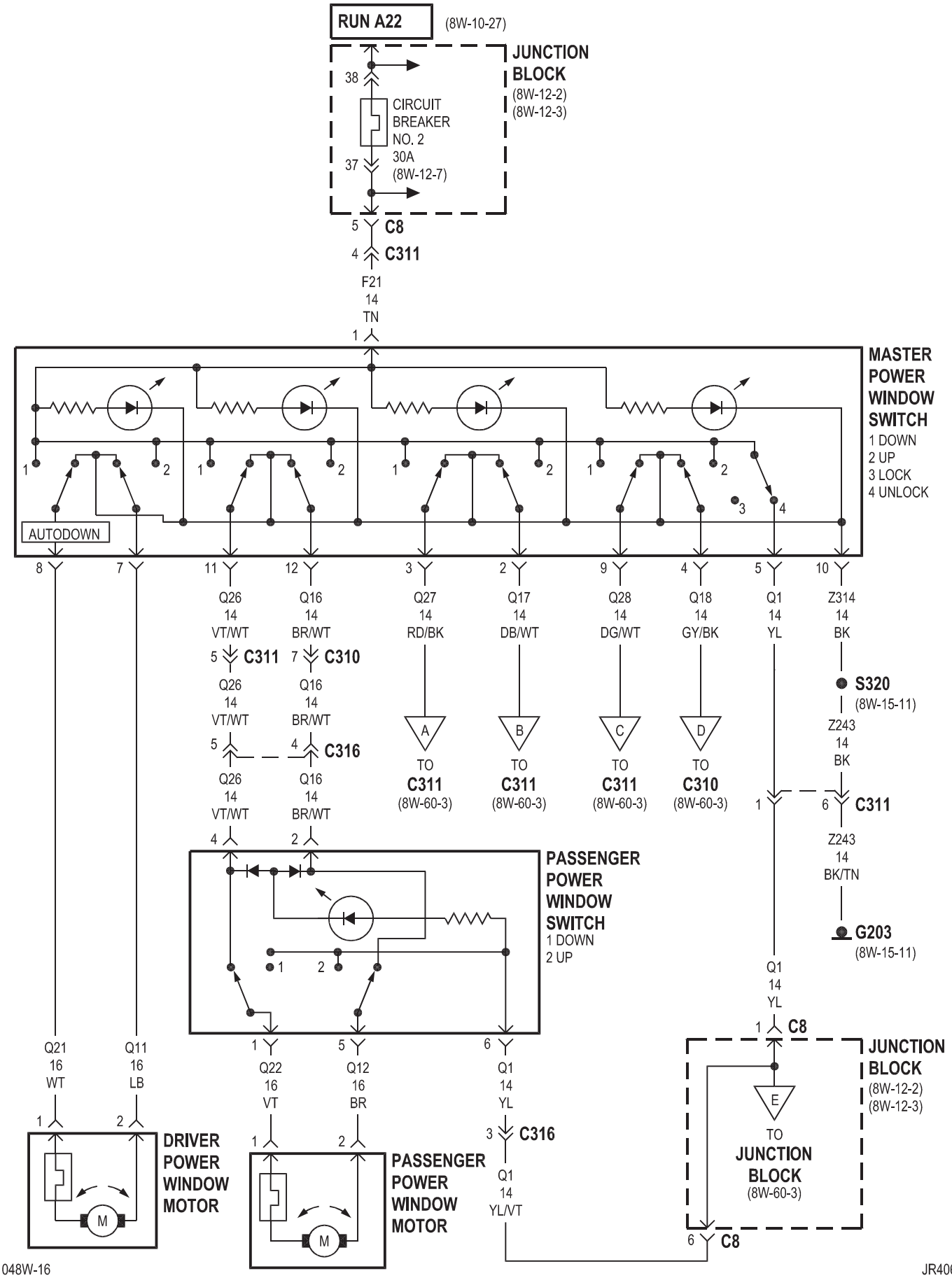
RUN A22
(8W-10-27)
JUNCTION BLOCK
(8W-12-2)
(8W-12-3)
38
CIRCUIT BREAKER NO. 2 30A
(8W-12-7)
37
5 C8
4 C311
F21
14
TN
1
MASTER POWER WINDOW SWITCH
1 DOWN
2 UP
3 LOCK
4 UNLOCK
AUTODOWN
8
7
11
12
3
2
9
4
5
10
Q26 14 VT/WT
Q16 14 BR/WT
Q27 14 RD/BK
Q17 14 DB/WT
Q28 14 DG/WT
Q18 14 GY/BK
Q1 14 YL
Z314 14 BK
5 C311
7 C310
Q26 14 VT/WT
Q16 14 BR/WT
5 C316
4
Q26 14 VT/WT
Q16 14 BR/WT
4
2
A
B
C
D
TO C311 (8W-60-3)
TO C311 (8W-60-3)
TO C311 (8W-60-3)
TO C310 (8W-60-3)
S320
(8W-15-11)
Z243 14 BK
1
6 C311
Z243 14 BK/TN
G203
(8W-15-11)
PASSENGER POWER WINDOW SWITCH
1 DOWN
2 UP
Q1 14 YL
1 C8
JUNCTION BLOCK
(8W-12-2)
(8W-12-3)
E
TO JUNCTION BLOCK
(8W-60-3)
6 C8
Q21 16 WT
Q11 16 LB
1
2
DRIVER POWER WINDOW MOTOR
M
1
5
6
Q22 16 VT
Q12 16 BR
Q1 14 YL
1
2
PASSENGER POWER WINDOW MOTOR
M
3 C316
Q1 14 YL/VT

JR41

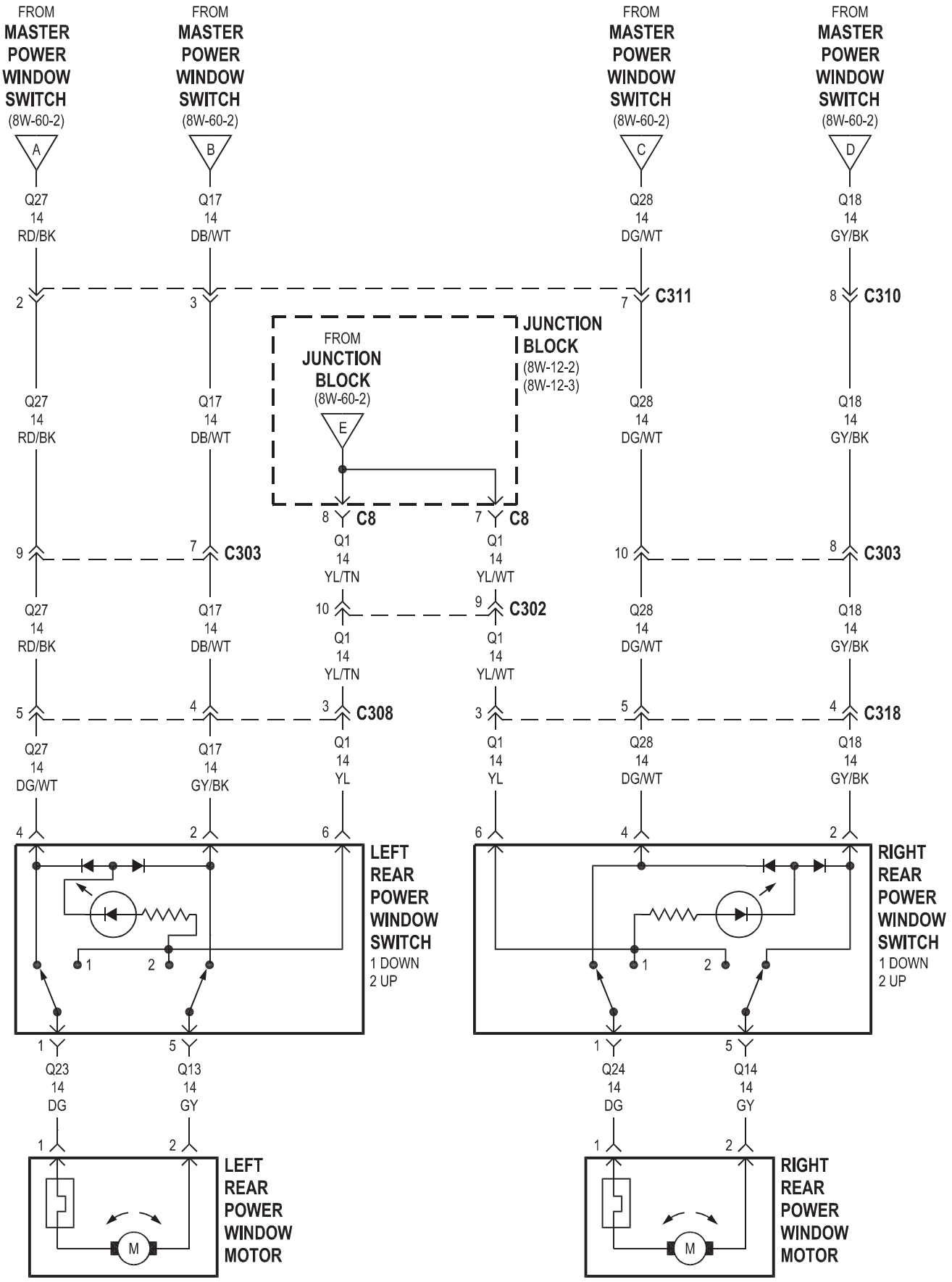
FROM MASTER POWER WINDOW SWITCH (8W-60-2) A
FROM MASTER POWER WINDOW SWITCH (8W-60-2) B
FROM MASTER POWER WINDOW SWITCH (8W-60-2) C
FROM MASTER POWER WINDOW SWITCH (8W-60-2) D
Q27 14 RD/BK
Q17 14 DB/WT
Q28 14 DG/WT
Q18 14 GY/BK
C311
C310
FROM JUNCTION BLOCK (8W-60-2) E
JUNCTION BLOCK (8W-12-2) (8W-12-3)
C8
C8
Q1 14 YL/TN
Q1 14 YL/WT
C303
C303
C302
C308
C318
Q27 14 DG/WT
Q17 14 GY/BK
Q1 14 YL
Q28 14 DG/WT
Q18 14 GY/BK
LEFT REAR POWER WINDOW SWITCH
1 DOWN
2 UP
RIGHT REAR POWER WINDOW SWITCH
1 DOWN
2 UP
Q23 14 DG
Q13 14 GY
Q24 14 DG
Q14 14 GY
LEFT REAR POWER WINDOW MOTOR
RIGHT REAR POWER WINDOW MOTOR
M

JR27

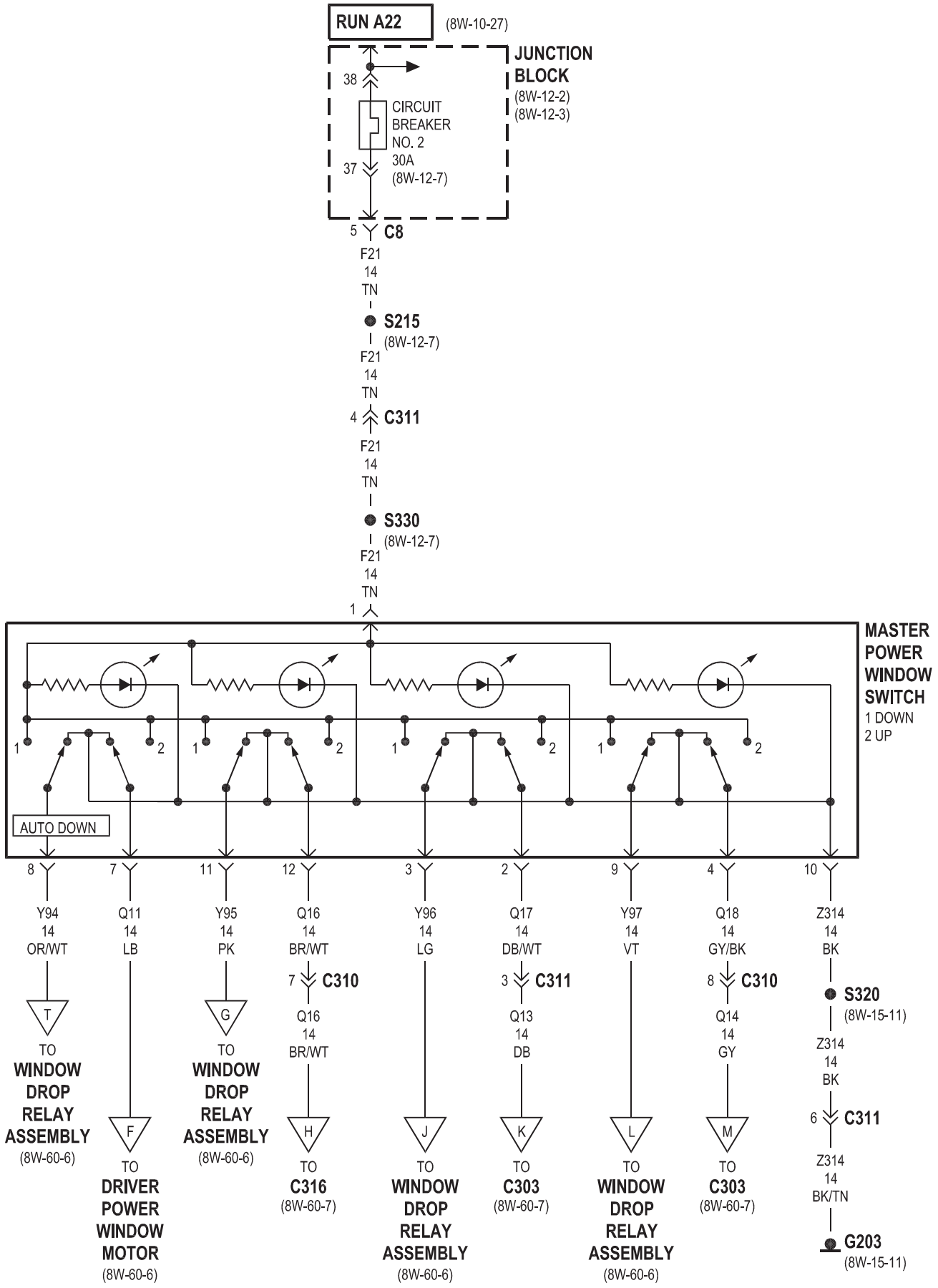
RUN A22
(8W-10-27)
JUNCTION BLOCK
(8W-12-2)
(8W-12-3)
38
CIRCUIT BREAKER NO. 2 30A
(8W-12-7)
37
5
C8
F21 14 TN
S215
(8W-12-7)
F21 14 TN
4
C311
F21 14 TN
S330
(8W-12-7)
F21 14 TN
1
MASTER POWER WINDOW SWITCH
1 DOWN
2 UP
AUTO DOWN
8
7
11
12
3
2
9
4
10
Y94 14 OR/WT
Q11 14 LB
Y95 14 PK
Q16 14 BR/WT
Y96 14 LG
Q17 14 DB/WT
Y97 14 VT
Q18 14 GY/BK
Z314 14 BK
7 C310
3 C311
8 C310
S320
(8W-15-11)
Q16 14 BR/WT
Q13 14 DB
Q14 14 GY
Z314 14 BK
6 C311
Z314 14 BK/TN
G203
(8W-15-11)
T
TO WINDOW DROP RELAY ASSEMBLY
(8W-60-6)
F
TO DRIVER POWER WINDOW MOTOR
(8W-60-6)
G
TO WINDOW DROP RELAY ASSEMBLY
(8W-60-6)
H
TO C316
(8W-60-7)
J
TO WINDOW DROP RELAY ASSEMBLY
(8W-60-6)
K
TO C303
(8W-60-7)
L
TO WINDOW DROP RELAY ASSEMBLY
(8W-60-6)
M
TO C303
(8W-60-7)

JR27

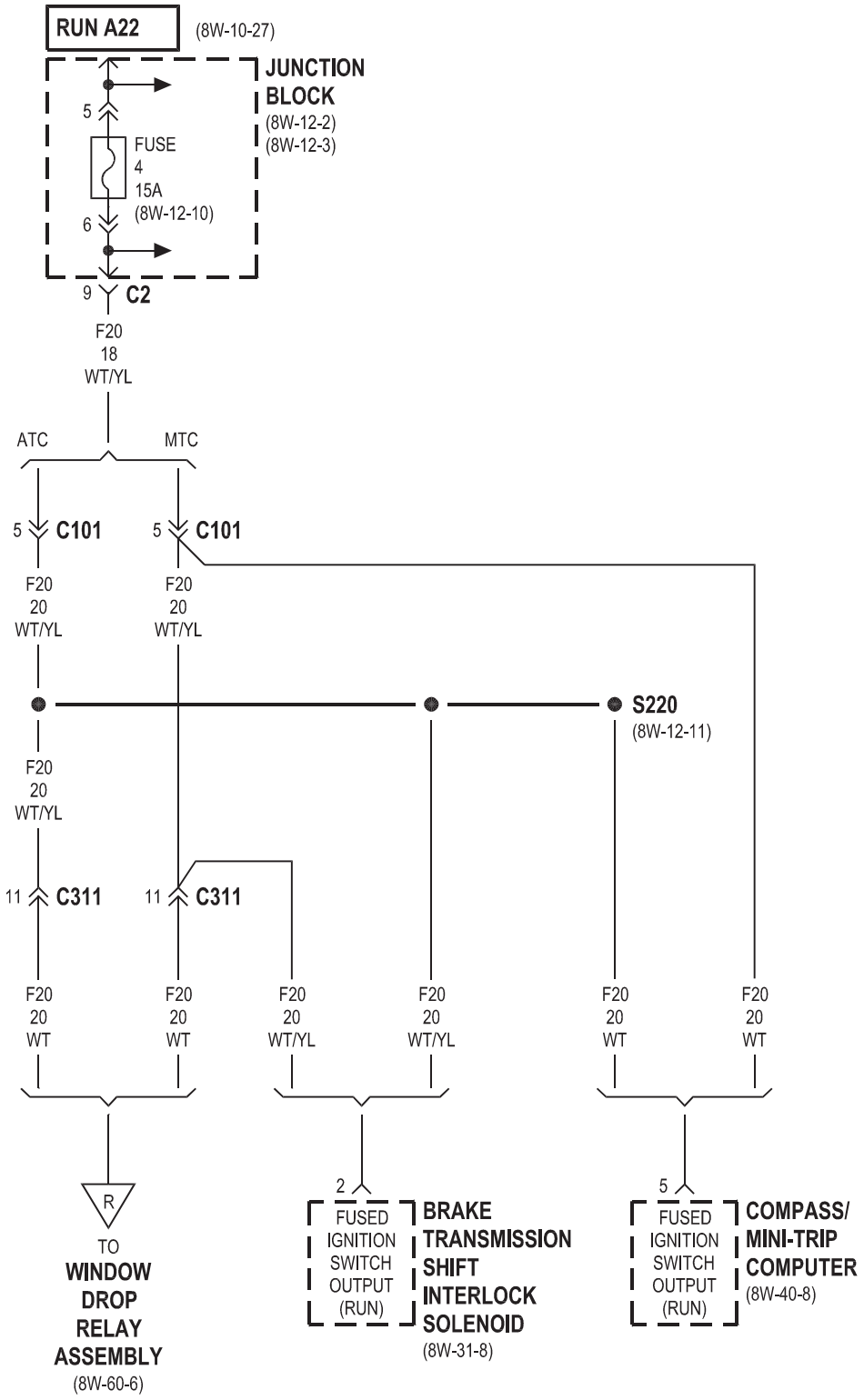
RUN A22
(8W-10-27)
JUNCTION BLOCK
(8W-12-2)
(8W-12-3)
5
FUSE
4
15A
(8W-12-10)
6
9
C2
F20
18
WT/YL
ATC
MTC
5
C101
5
C101
F20
20
WT/YL
F20
20
WT/YL
S220
(8W-12-11)
F20
20
WT/YL
11
C311
11
C311
F20
20
WT
F20
20
WT
F20
20
WT/YL
F20
20
WT/YL
F20
20
WT
F20
20
WT
R
TO
WINDOW DROP RELAY ASSEMBLY
(8W-60-6)
2
FUSED IGNITION SWITCH OUTPUT (RUN)
BRAKE TRANSMISSION SHIFT INTERLOCK SOLENOID
(8W-31-8)
5
FUSED IGNITION SWITCH OUTPUT (RUN)
COMPASS/ MINI-TRIP COMPUTER
(8W-40-8)

JR27

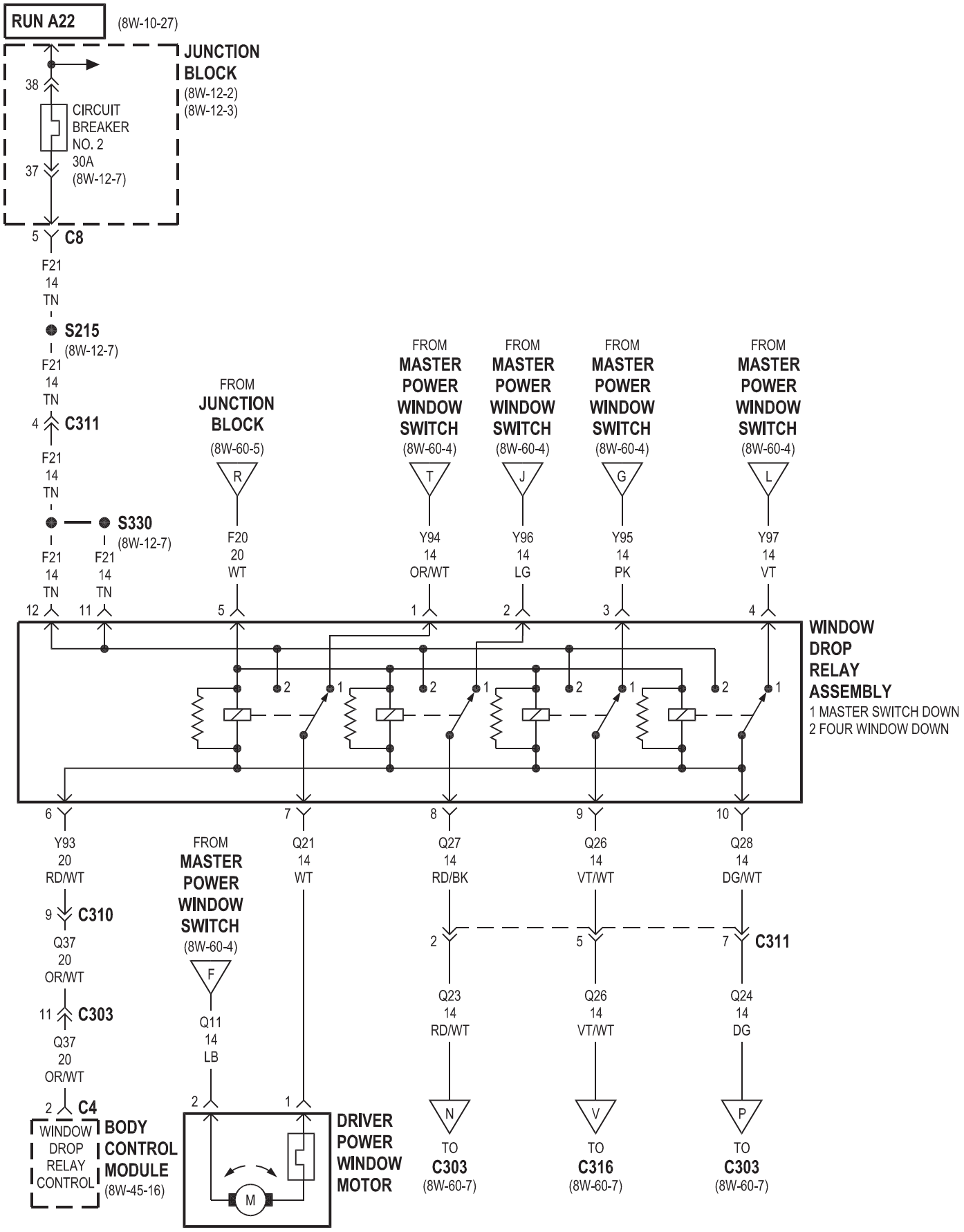
RUN A22
(8W-10-27)
JUNCTION BLOCK
(8W-12-2)
(8W-12-3)
38
CIRCUIT BREAKER NO. 2 30A
(8W-12-7)
37
5
C8
F21 14 TN
S215
(8W-12-7)
F21 14 TN
4
C311
F21 14 TN
S330
(8W-12-7)
F21 14 TN
F21 14 TN
12
11
FROM JUNCTION BLOCK
(8W-60-5)
R
F20 20 WT
5
FROM MASTER POWER WINDOW SWITCH
(8W-60-4)
T
Y94 14 OR/WT
1
FROM MASTER POWER WINDOW SWITCH
(8W-60-4)
J
Y96 14 LG
2
FROM MASTER POWER WINDOW SWITCH
(8W-60-4)
G
Y95 14 PK
3
FROM MASTER POWER WINDOW SWITCH
(8W-60-4)
L
Y97 14 VT
4
WINDOW DROP RELAY ASSEMBLY
1 MASTER SWITCH DOWN
2 FOUR WINDOW DOWN
6
Y93 20 RD/WT
9
C310
Q37 20 OR/WT
11
C303
Q37 20 OR/WT
2
C4
WINDOW DROP RELAY CONTROL
BODY CONTROL MODULE
(8W-45-16)
FROM MASTER POWER WINDOW SWITCH
(8W-60-4)
F
Q11 14 LB
2
7
Q21 14 WT
1
M
DRIVER POWER WINDOW MOTOR
8
Q27 14 RD/BK
9
Q26 14 VT/WT
10
Q28 14 DG/WT
2
5
7
C311
Q23 14 RD/WT
Q26 14 VT/WT
Q24 14 DG
N
TO C303
(8W-60-7)
V
TO C316
(8W-60-7)
P
TO C303
(8W-60-7)

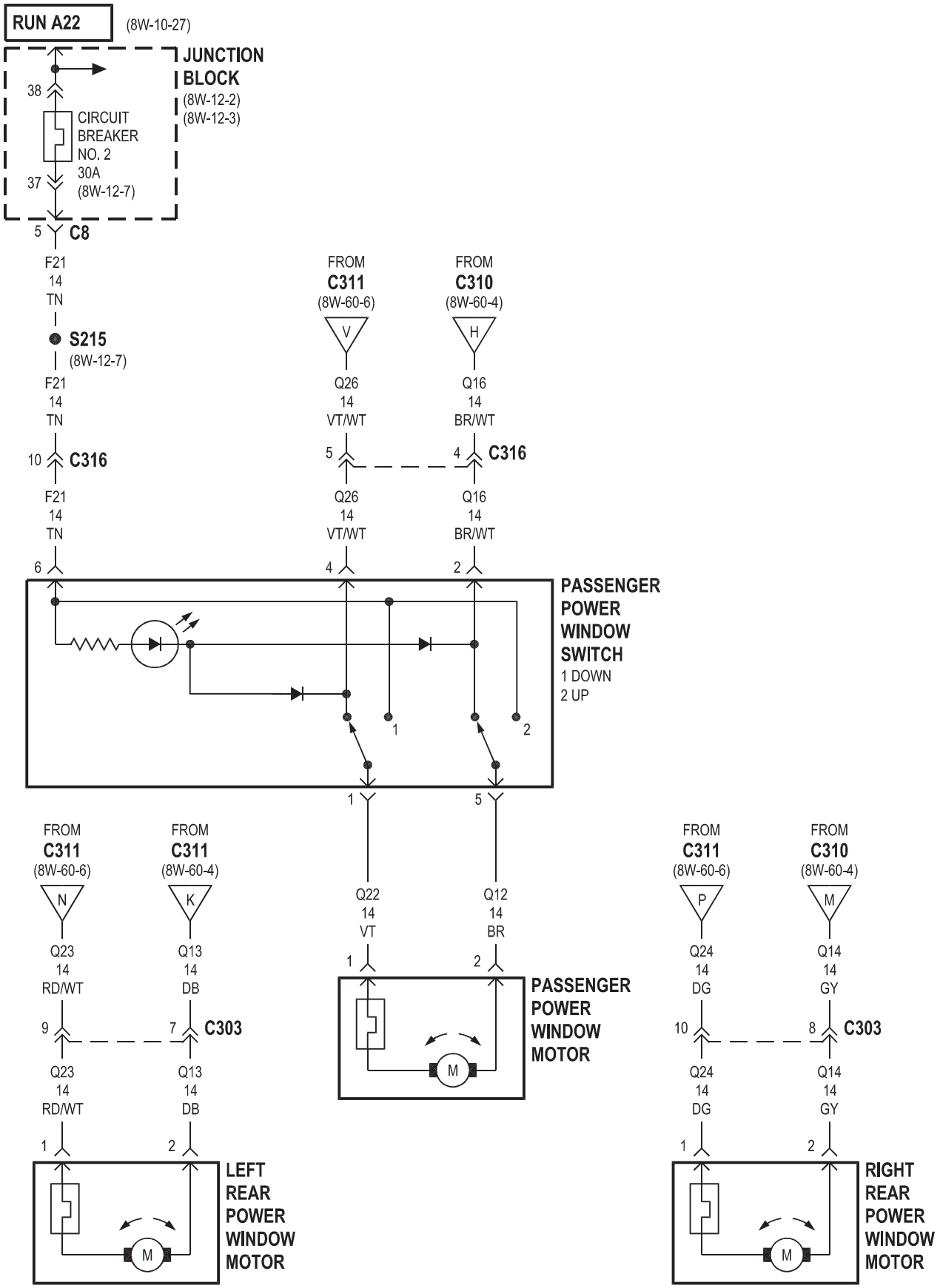
RUN A22
(8W-10-27)
JUNCTION BLOCK
(8W-12-2)
(8W-12-3)
38
CIRCUIT BREAKER NO. 2 30A
(8W-12-7)
37
5
C8
F21
14
TN
S215
(8W-12-7)
F21
14
TN
10
C316
F21
14
TN
6
FROM
C311
(8W-60-6)
V
Q26
14
VT/WT
5
Q26
14
VT/WT
4
FROM
C310
(8W-60-4)
H
Q16
14
BR/WT
4
C316
Q16
14
BR/WT
2
PASSENGER POWER WINDOW SWITCH
1 DOWN
2 UP
1
2
1
5
FROM
C311
(8W-60-6)
N
Q23
14
RD/WT
9
Q23
14
RD/WT
1
FROM
C311
(8W-60-4)
K
Q13
14
DB
7
C303
Q13
14
DB
2
Q22
14
VT
1
Q12
14
BR
2
M
PASSENGER POWER WINDOW MOTOR
FROM
C311
(8W-60-6)
P
Q24
14
DG
10
Q24
14
DG
1
FROM
C310
(8W-60-4)
M
Q14
14
GY
8
C303
Q14
14
GY
2
M
LEFT REAR POWER WINDOW MOTOR
M
RIGHT REAR POWER WINDOW MOTOR

8W-61 POWER DOOR LOCKS

Component	Page
Body Control Module	8W-61-3, 4, 5, 6
Driver Cylinder Lock Switch	8W-61-5, 6
Driver Door Lock Motor/Ajar Switch	8W-61-5, 6
Driver Door Lock Switch	8W-61-2, 3
Fuse 5	8W-61-2
G203	8W-61-3, 5, 6
G301	8W-61-4
Junction Block	8W-61-2
Left Rear Door Lock Motor/Ajar Switch	8W-61-4
Passenger Door Lock Motor/Ajar Switch	8W-61-5, 6
Passenger Door Lock Switch	8W-61-2, 3
Remote Keyless Entry Antenna	8W-61-5, 6
Right Rear Door Lock Motor/Ajar Switch	8W-61-4
Seat Belt Control Module	8W-61-6

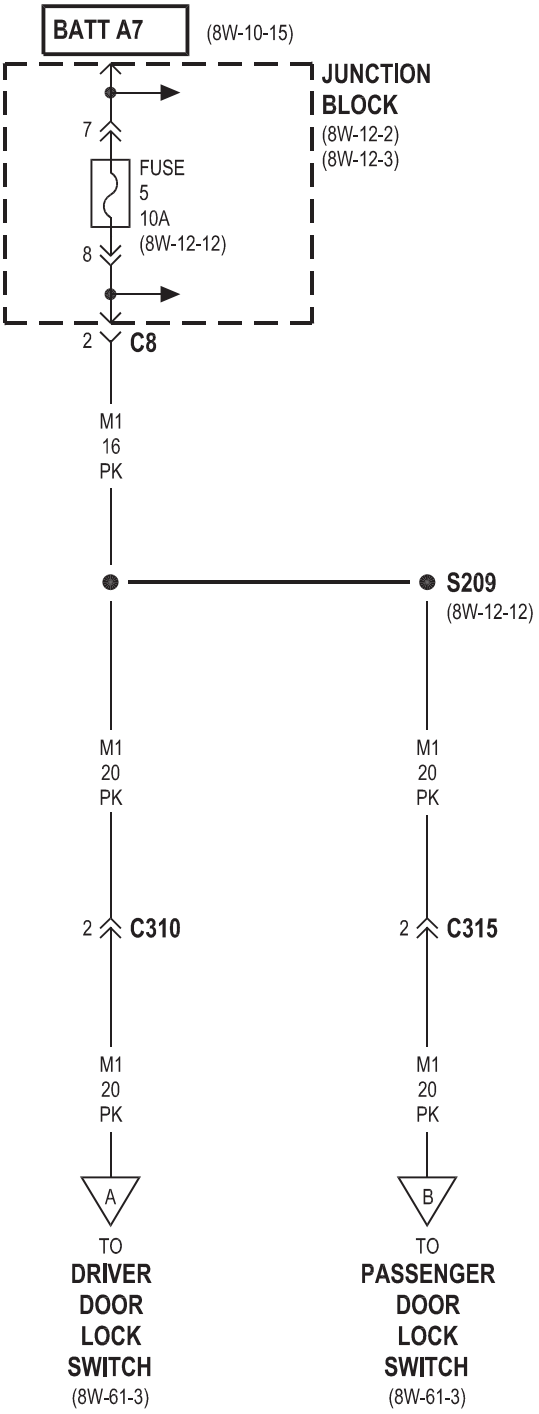
BATT A7
(8W-10-15)
JUNCTION BLOCK
(8W-12-2)
(8W-12-3)
7
FUSE
5
10A
(8W-12-12)
8
2
C8
M1
16
PK
S209
(8W-12-12)
M1
20
PK
M1
20
PK
2
C310
2
C315
M1
20
PK
M1
20
PK
A
B
TO
DRIVER DOOR LOCK SWITCH
(8W-61-3)
TO
PASSENGER DOOR LOCK SWITCH
(8W-61-3)

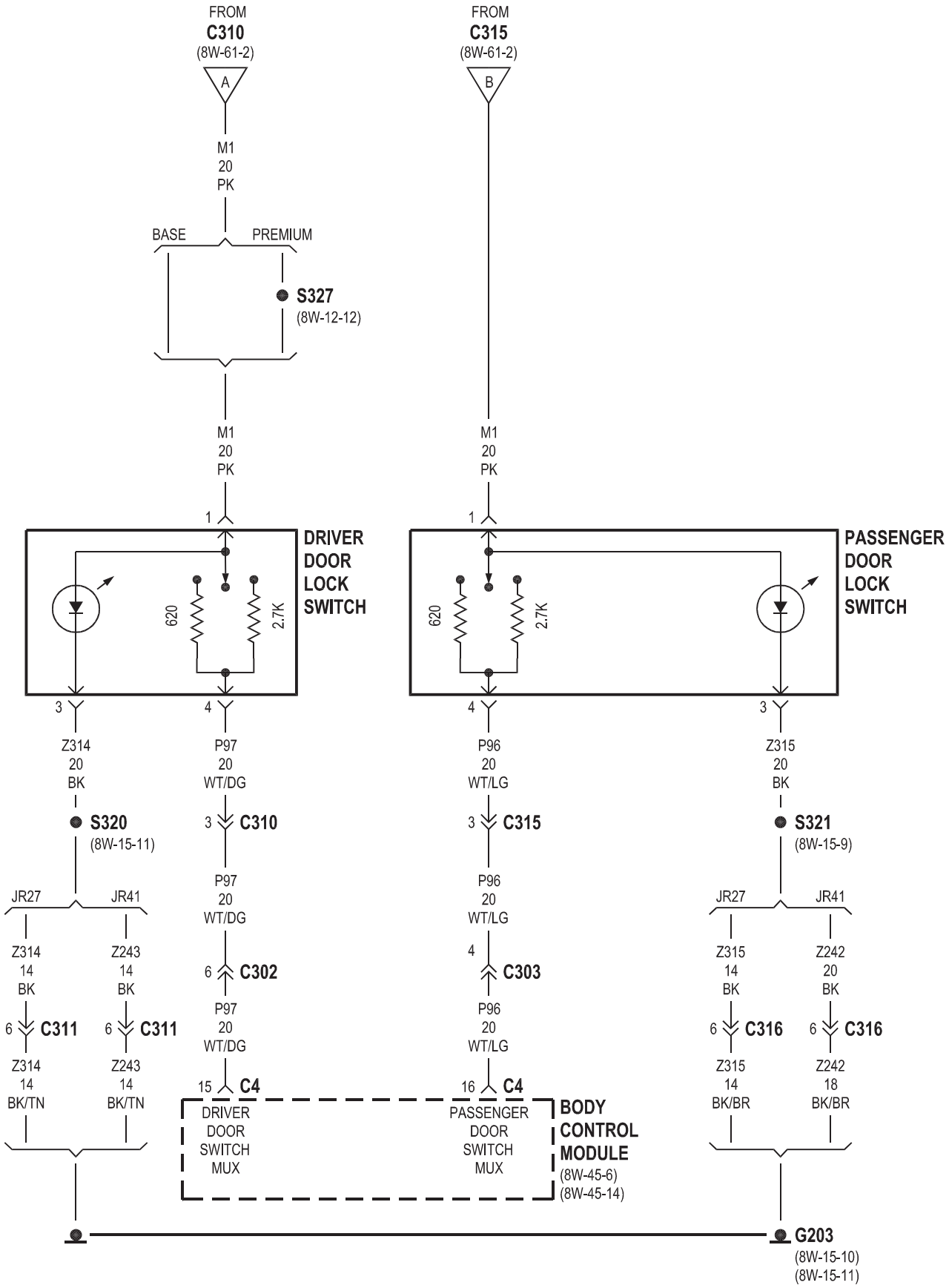
FROM
C310
(8W-61-2)
A
M1
20
PK
BASE
PREMIUM
S327
(8W-12-12)
M1
20
PK
1
DRIVER
DOOR
LOCK
SWITCH
620
2.7K
3
4
Z314
20
BK
P97
20
WT/DG
S320
(8W-15-11)
3
C310
P97
20
WT/DG
JR27
JR41
Z314
14
BK
Z243
14
BK
6
C302
P97
20
WT/DG
6
C311
6
C311
Z314
14
BK/TN
Z243
14
BK/TN
15
C4
DRIVER
DOOR
SWITCH
MUX
FROM
C315
(8W-61-2)
B
M1
20
PK
1
PASSENGER
DOOR
LOCK
SWITCH
620
2.7K
4
3
P96
20
WT/LG
Z315
20
BK
3
C315
P96
20
WT/LG
4
C303
P96
20
WT/LG
16
C4
PASSENGER
DOOR
SWITCH
MUX
BODY
CONTROL
MODULE
(8W-45-6)
(8W-45-14)
S321
(8W-15-9)
JR27
JR41
Z315
14
BK
Z242
20
BK
6
C316
6
C316
Z315
14
BK/BR
Z242
18
BK/BR
G203
(8W-15-10)
(8W-15-11)

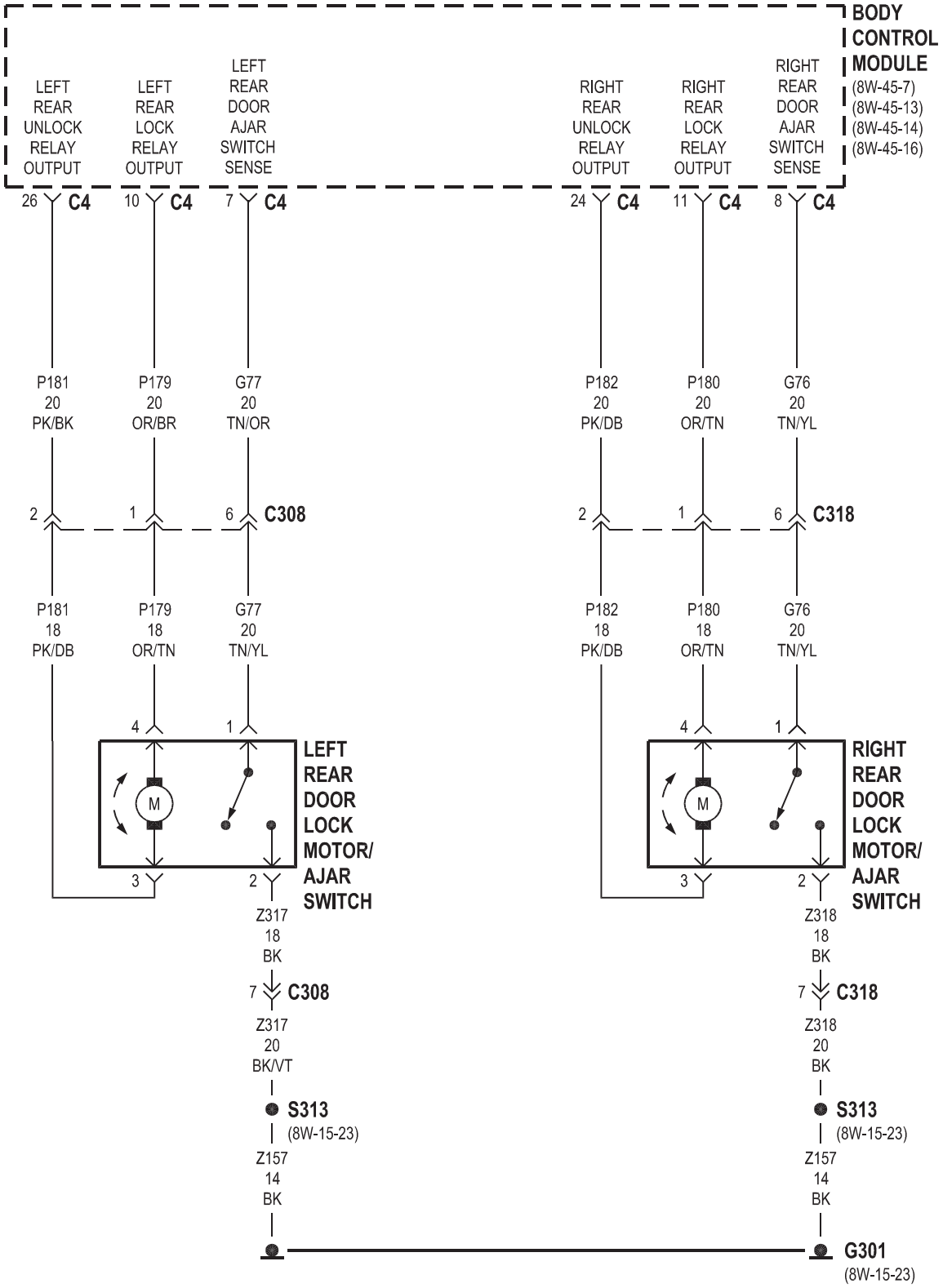
BODY CONTROL MODULE
(8W-45-7)
(8W-45-13)
(8W-45-14)
(8W-45-16)
LEFT REAR UNLOCK RELAY OUTPUT
LEFT REAR LOCK RELAY OUTPUT
LEFT REAR DOOR AJAR SWITCH SENSE
RIGHT REAR UNLOCK RELAY OUTPUT
RIGHT REAR LOCK RELAY OUTPUT
RIGHT REAR DOOR AJAR SWITCH SENSE
26 C4
10 C4
7 C4
24 C4
11 C4
8 C4
P181 20 PK/BK
P179 20 OR/BR
G77 20 TN/OR
P182 20 PK/DB
P180 20 OR/TN
G76 20 TN/YL
2
1
6 C308
2
1
6 C318
P181 18 PK/DB
P179 18 OR/TN
G77 20 TN/YL
P182 18 PK/DB
P180 18 OR/TN
G76 20 TN/YL
4
1
M
3
2
LEFT REAR DOOR LOCK MOTOR/ AJAR SWITCH
4
1
M
3
2
RIGHT REAR DOOR LOCK MOTOR/ AJAR SWITCH
Z317 18 BK
7 C308
Z317 20 BK/VT
S313
(8W-15-23)
Z157 14 BK
Z318 18 BK
7 C318
Z318 20 BK
S313
(8W-15-23)
Z157 14 BK
G301
(8W-15-23)

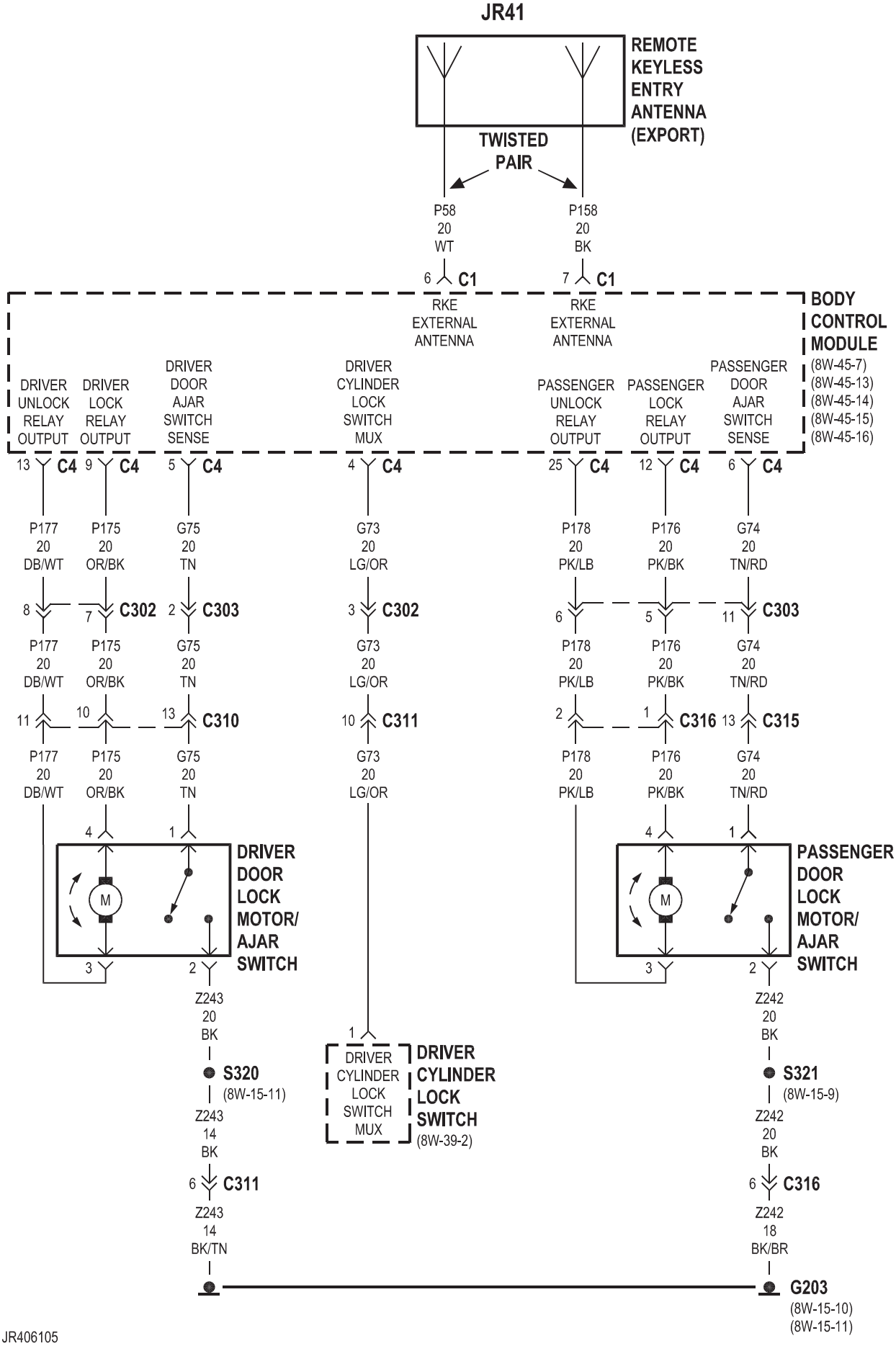
JR41
REMOTE KEYLESS ENTRY ANTENNA (EXPORT)
TWISTED PAIR
P58 20 WT
P158 20 BK
6 C1
7 C1
RKE EXTERNAL ANTENNA
RKE EXTERNAL ANTENNA
BODY CONTROL MODULE
(8W-45-7)
(8W-45-13)
(8W-45-14)
(8W-45-15)
(8W-45-16)
DRIVER UNLOCK RELAY OUTPUT
DRIVER LOCK RELAY OUTPUT
DRIVER DOOR AJAR SWITCH SENSE
DRIVER CYLINDER LOCK SWITCH MUX
PASSENGER UNLOCK RELAY OUTPUT
PASSENGER LOCK RELAY OUTPUT
PASSENGER DOOR AJAR SWITCH SENSE
13 C4
9 C4
5 C4
4 C4
25 C4
12 C4
6 C4
P177 20 DB/WT
P175 20 OR/BK
G75 20 TN
G73 20 LG/OR
P178 20 PK/LB
P176 20 PK/BK
G74 20 TN/RD
8
7 C302
2 C303
3 C302
6
5
11 C303
P177 20 DB/WT
P175 20 OR/BK
G75 20 TN
G73 20 LG/OR
P178 20 PK/LB
P176 20 PK/BK
G74 20 TN/RD
11
10
13 C310
10 C311
2
1 C316
13 C315
P177 20 DB/WT
P175 20 OR/BK
G75 20 TN
G73 20 LG/OR
P178 20 PK/LB
P176 20 PK/BK
G74 20 TN/RD
4
1
M
DRIVER DOOR LOCK MOTOR/ AJAR SWITCH
3
2
4
1
M
PASSENGER DOOR LOCK MOTOR/ AJAR SWITCH
3
2
Z243 20 BK
Z242 20 BK
1
DRIVER CYLINDER LOCK SWITCH MUX
DRIVER CYLINDER LOCK SWITCH
(8W-39-2)
S320
(8W-15-11)
S321
(8W-15-9)
Z243 14 BK
Z242 20 BK
6 C311
6 C316
Z243 14 BK/TN
Z242 18 BK/BR
G203
(8W-15-10)
(8W-15-11)

JR27

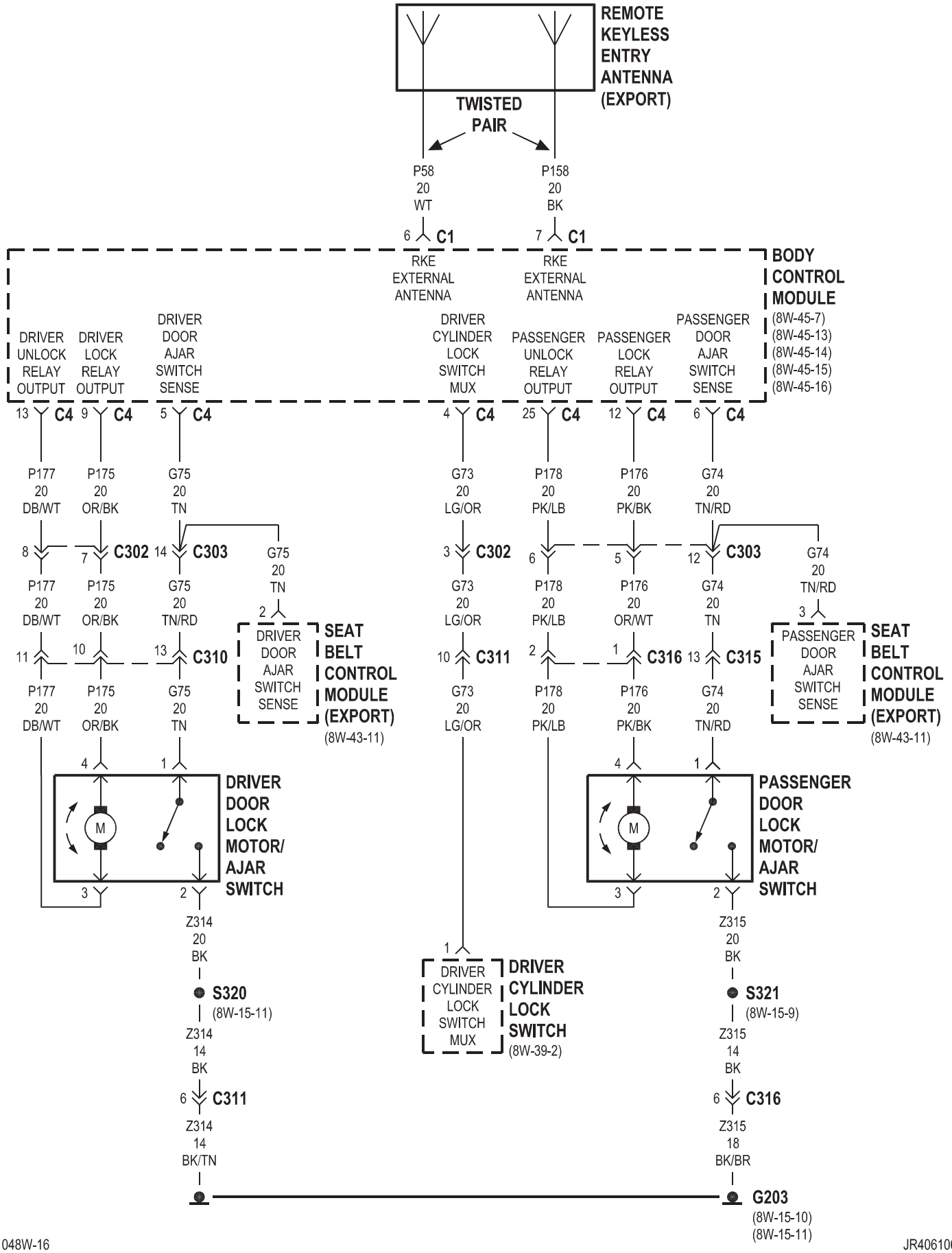
REMOTE KEYLESS ENTRY ANTENNA (EXPORT)
TWISTED PAIR
P58 20 WT
P158 20 BK
6 C1
7 C1
RKE EXTERNAL ANTENNA
RKE EXTERNAL ANTENNA
BODY CONTROL MODULE
(8W-45-7)
(8W-45-13)
(8W-45-14)
(8W-45-15)
(8W-45-16)
DRIVER UNLOCK RELAY OUTPUT
DRIVER LOCK RELAY OUTPUT
DRIVER DOOR AJAR SWITCH SENSE
DRIVER CYLINDER LOCK SWITCH MUX
PASSENGER UNLOCK RELAY OUTPUT
PASSENGER LOCK RELAY OUTPUT
PASSENGER DOOR AJAR SWITCH SENSE
13 C4
9 C4
5 C4
4 C4
25 C4
12 C4
6 C4
P177 20 DB/WT
P175 20 OR/BK
G75 20 TN
G73 20 LG/OR
P178 20 PK/LB
P176 20 PK/BK
G74 20 TN/RD
8 7 C302
14 C303
3 C302
6 5 12 C303
G75 20 TN
G74 20 TN/RD
P177 20 DB/WT
P175 20 OR/BK
G75 20 TN/RD
G73 20 LG/OR
P178 20 PK/LB
P176 20 OR/WT
G74 20 TN
2
3
DRIVER DOOR AJAR SWITCH SENSE
SEAT BELT CONTROL MODULE (EXPORT)
(8W-43-11)
PASSENGER DOOR AJAR SWITCH SENSE
SEAT BELT CONTROL MODULE (EXPORT)
(8W-43-11)
11 10 13 C310
10 C311
2 1 C316
13 C315
P177 20 DB/WT
P175 20 OR/BK
G75 20 TN
G73 20 LG/OR
P178 20 PK/LB
P176 20 PK/BK
G74 20 TN/RD
4 1
M
DRIVER DOOR LOCK MOTOR/ AJAR SWITCH
3 2
PASSENGER DOOR LOCK MOTOR/ AJAR SWITCH
Z314 20 BK
Z315 20 BK
1
DRIVER CYLINDER LOCK SWITCH MUX
DRIVER CYLINDER LOCK SWITCH
(8W-39-2)
S320
(8W-15-11)
S321
(8W-15-9)
Z314 14 BK
Z315 14 BK
6 C311
6 C316
Z314 14 BK/TN
Z315 18 BK/BR
G203
(8W-15-10)
(8W-15-11)

8W-62 POWER MIRRORS

Component	Page
Automatic Day/Night Mirror	8W-62-5, 6
Back-Up Lamp Switch	8W-62-5, 6
Body Control Module	8W-62-5
Fuse 4	8W-62-5, 6
Fuse 5	8W-62-2, 3, 5
Fuse 6	8W-62-4
G203	8W-62-4
G301	8W-62-2, 3, 5, 6
Junction Block	8W-62-2, 3, 4, 5, 6
Left Power Mirror	8W-62-2, 3, 4
Power Mirror Switch	8W-62-2, 3
Rear Window Defogger Relay	8W-62-4
Right Power Mirror	8W-62-2, 3, 4
Transmission Range Sensor	8W-62-5, 6

JR27

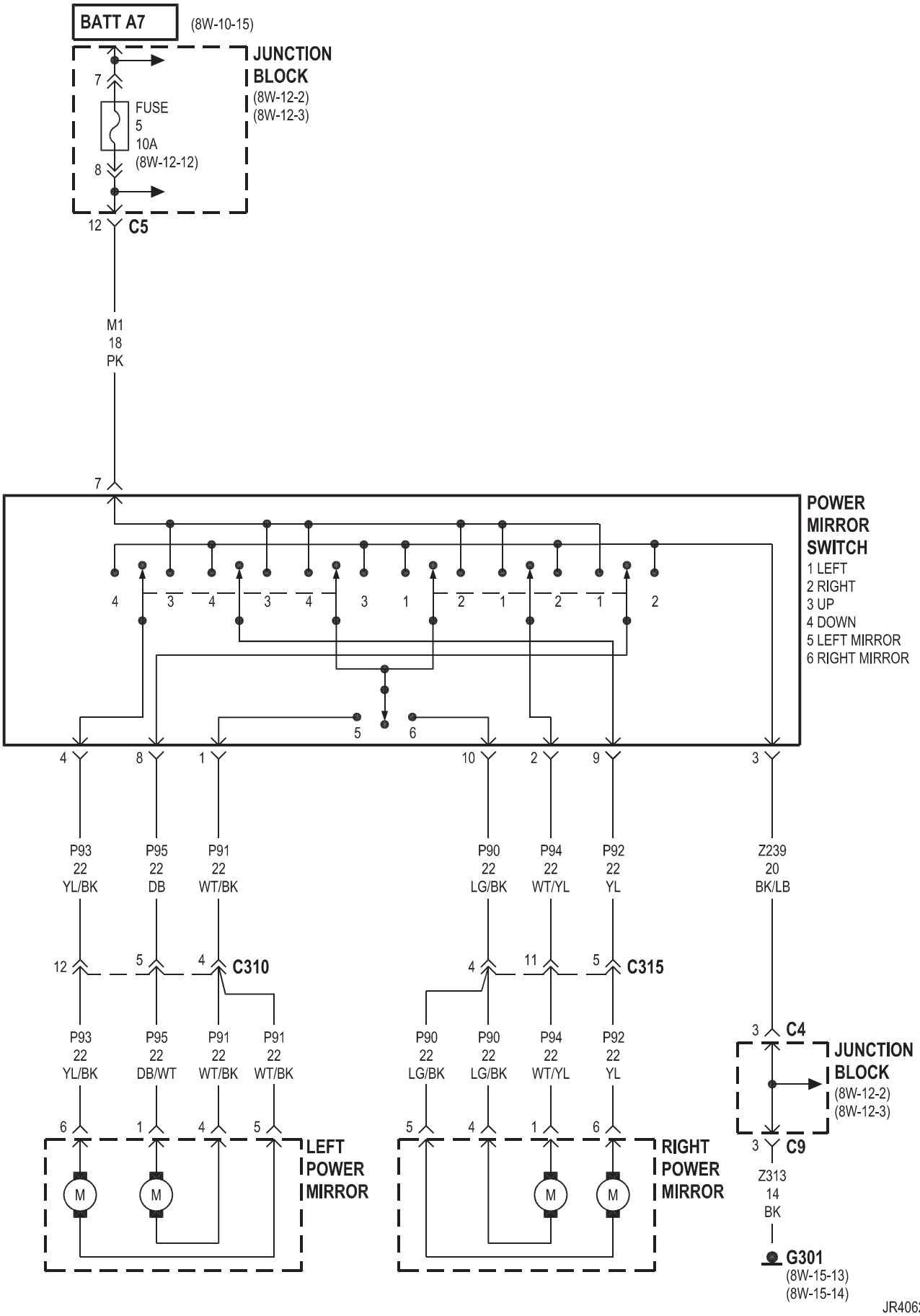
BATT A7
(8W-10-15)
JUNCTION BLOCK
(8W-12-2)
(8W-12-3)
7
FUSE
5
10A
(8W-12-12)
8
12
C5
M1
18
PK
7
POWER MIRROR SWITCH
1 LEFT
2 RIGHT
3 UP
4 DOWN
5 LEFT MIRROR
6 RIGHT MIRROR
4 3 4 3 4 3 1 2 1 2 1 2
5 6
4 8 1 10 2 9 3
P93 22 YL/BK
P95 22 DB
P91 22 WT/BK
P90 22 LG/BK
P94 22 WT/YL
P92 22 YL
Z239 20 BK/LB
12 5 4 C310
4 11 5 C315
P93 22 YL/BK
P95 22 DB/WT
P91 22 WT/BK
P91 22 WT/BK
P90 22 LG/BK
P90 22 LG/BK
P94 22 WT/YL
P92 22 YL
3 C4
JUNCTION BLOCK
(8W-12-2)
(8W-12-3)
3 C9
6 1 4 5
LEFT POWER MIRROR
M M
5 4 1 6
RIGHT POWER MIRROR
M M
Z313
14
BK
G301
(8W-15-13)
(8W-15-14)

JR41

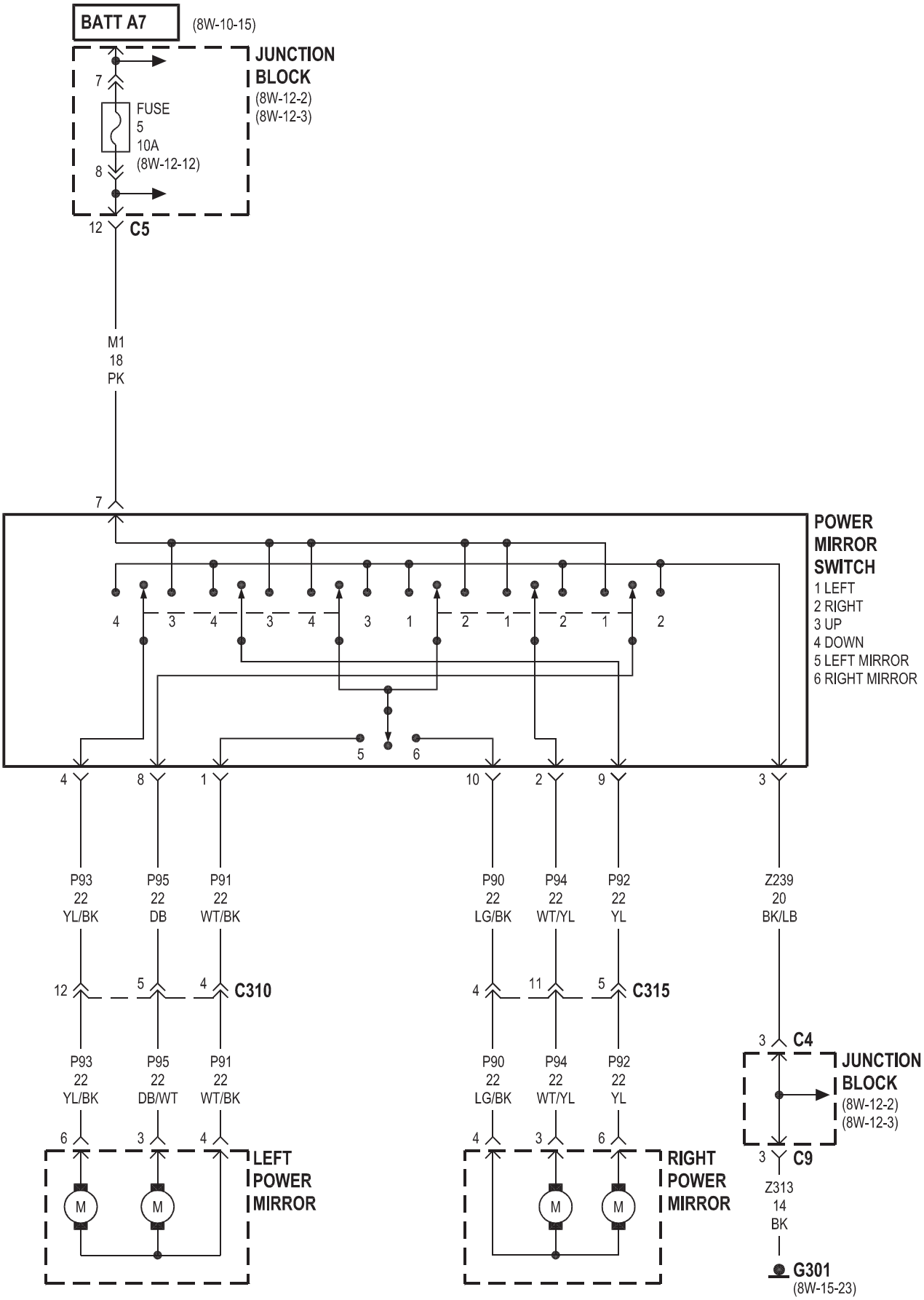
BATT A7
(8W-10-15)
JUNCTION BLOCK
(8W-12-2)
(8W-12-3)
7
FUSE
5
10A
(8W-12-12)
8
12
C5
M1
18
PK
7
POWER MIRROR SWITCH
1 LEFT
2 RIGHT
3 UP
4 DOWN
5 LEFT MIRROR
6 RIGHT MIRROR
4 3 4 3 4 3 1 2 1 2 1 2
5 6
4 8 1 10 2 9 3
P93 22 YL/BK
P95 22 DB
P91 22 WT/BK
P90 22 LG/BK
P94 22 WT/YL
P92 22 YL
Z239 20 BK/LB
12 5 4 C310
4 11 5 C315
P93 22 YL/BK
P95 22 DB/WT
P91 22 WT/BK
P90 22 LG/BK
P94 22 WT/YL
P92 22 YL
3 C4
JUNCTION BLOCK
(8W-12-2)
(8W-12-3)
3 C9
Z313
14
BK
G301
(8W-15-23)
6 3 4
LEFT POWER MIRROR
M
M
4 3 6
RIGHT POWER MIRROR
M
M

HEATED MIRROR

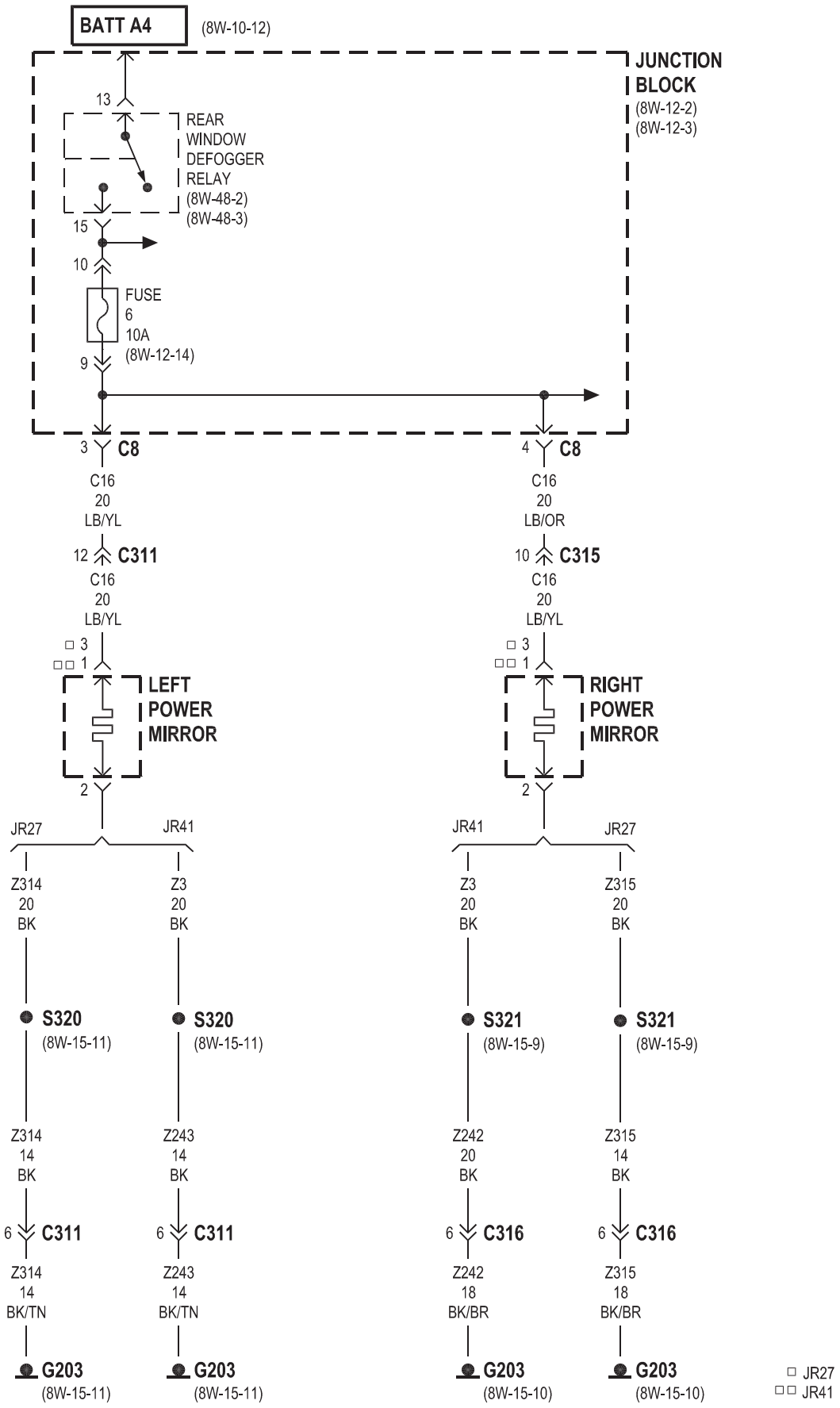

JR27

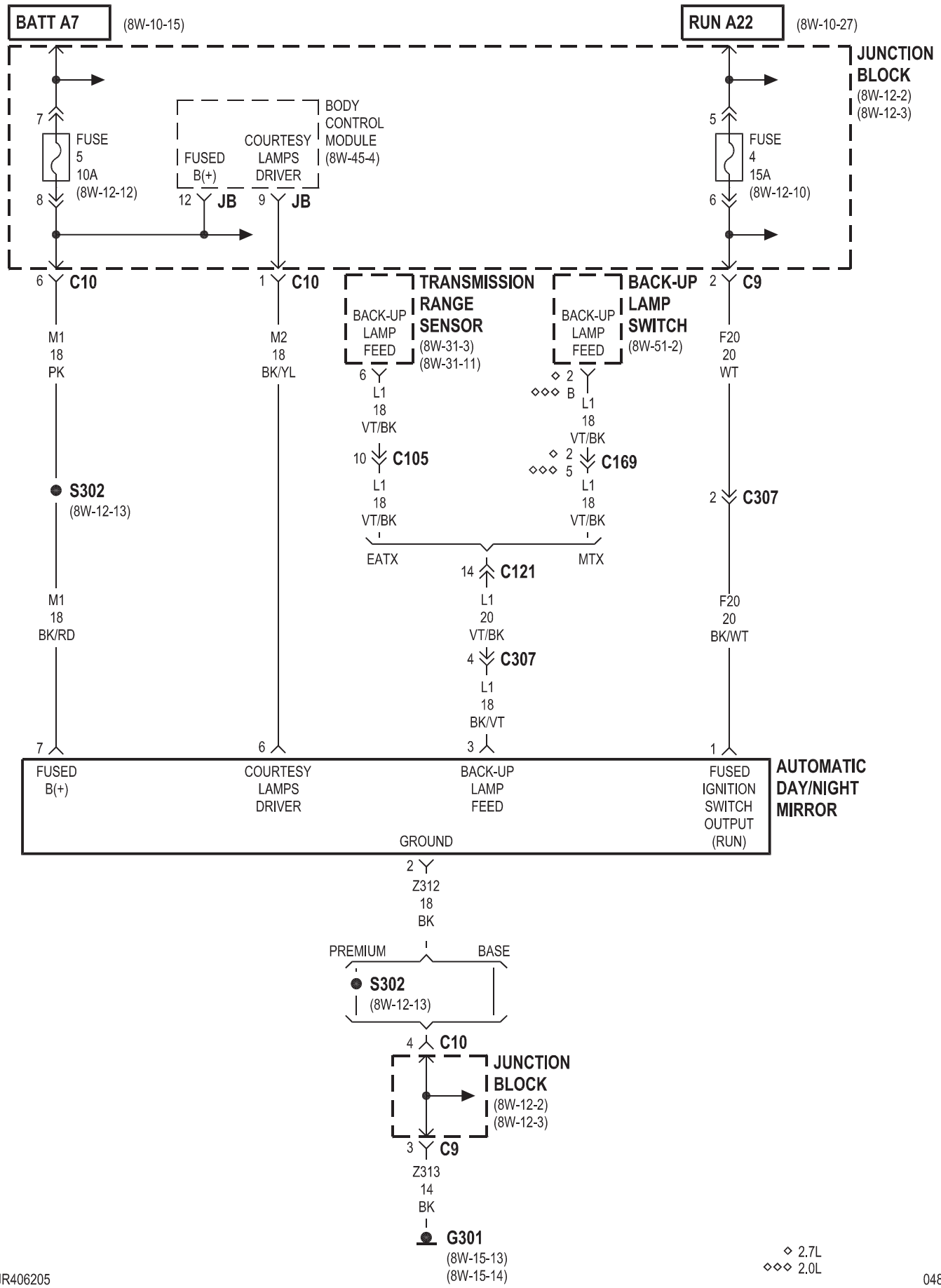
BATT A7
(8W-10-15)
RUN A22
(8W-10-27)
JUNCTION BLOCK
(8W-12-2)
(8W-12-3)
7
FUSE 5 10A (8W-12-12)
8
BODY CONTROL MODULE (8W-45-4)
FUSED B(+)
COURTESY LAMPS DRIVER
12 JB
9 JB
5
FUSE 4 15A (8W-12-10)
6
6 C10
1 C10
2 C9
M1 18 PK
M2 18 BK/YL
F20 20 WT
TRANSMISSION RANGE SENSOR
(8W-31-3)
(8W-31-11)
BACK-UP LAMP FEED
6 L1 18 VT/BK
10 C105
L1 18 VT/BK
BACK-UP LAMP SWITCH
(8W-51-2)
BACK-UP LAMP FEED
2 B
L1 18 VT/BK
2 5 C169
L1 18 VT/BK
S302
(8W-12-13)
2 C307
EATX
MTX
14 C121
L1 20 VT/BK
4 C307
L1 18 BK/VT
M1 18 BK/RD
F20 20 BK/WT
7
6
3
1
FUSED B(+)
COURTESY LAMPS DRIVER
BACK-UP LAMP FEED
FUSED IGNITION SWITCH OUTPUT (RUN)
GROUND
AUTOMATIC DAY/NIGHT MIRROR
2 Z312 18 BK
PREMIUM
BASE
S302
(8W-12-13)
4 C10
JUNCTION BLOCK
(8W-12-2)
(8W-12-3)
3 C9
Z313 14 BK
G301
(8W-15-13)
(8W-15-14)
2.7L
2.0L

JR41

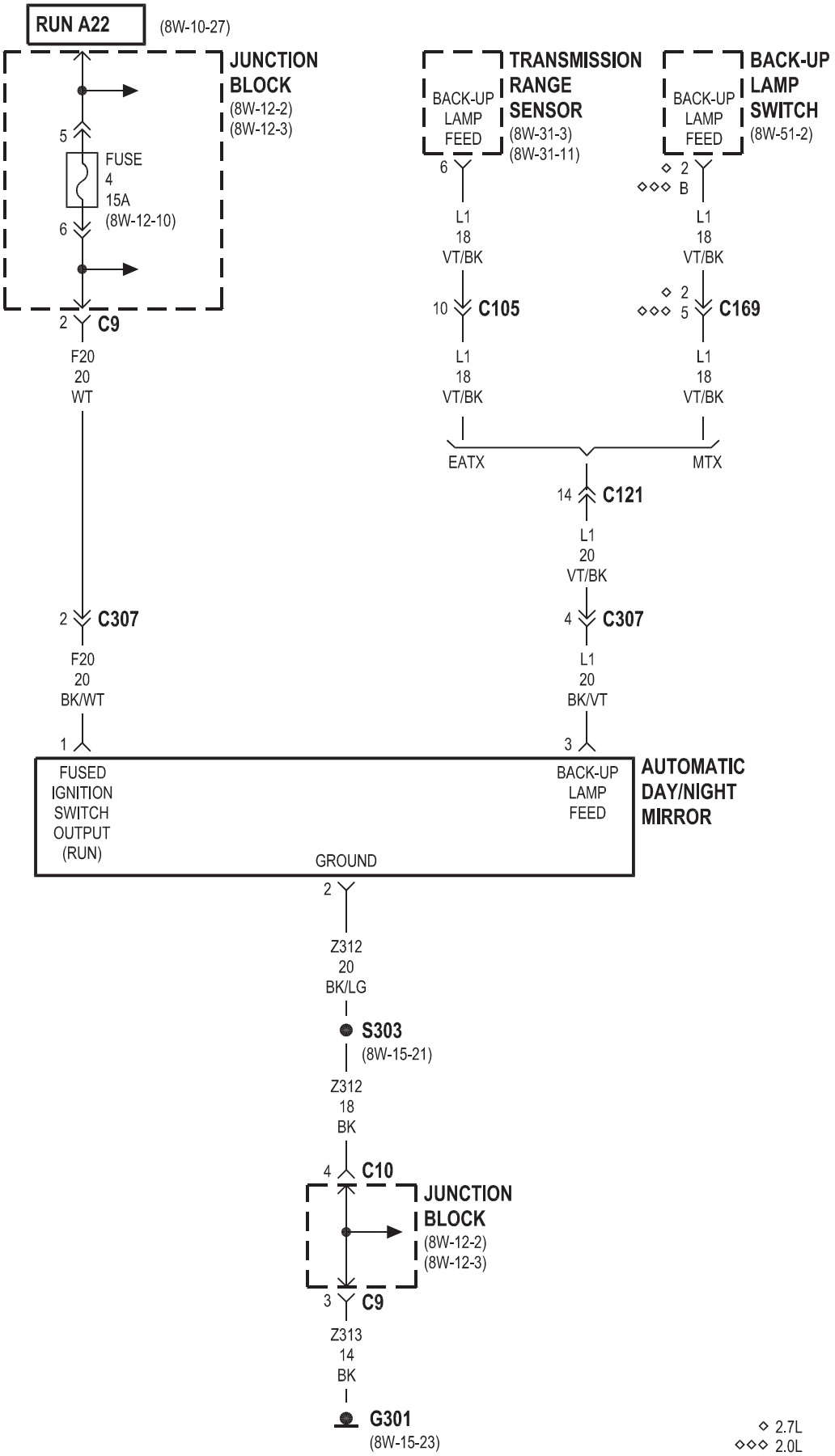
RUN A22
(8W-10-27)
JUNCTION BLOCK
(8W-12-2)
(8W-12-3)
5
FUSE
4
15A
(8W-12-10)
6
2
C9
F20
20
WT
2
C307
F20
20
BK/WT
1
TRANSMISSION RANGE SENSOR
(8W-31-3)
(8W-31-11)
BACK-UP LAMP FEED
6
L1
18
VT/BK
10
C105
L1
18
VT/BK
BACK-UP LAMP SWITCH
(8W-51-2)
BACK-UP LAMP FEED
◇ 2
◇◇◇ B
L1
18
VT/BK
◇ 2
◇◇◇ 5
C169
L1
18
VT/BK
EATX
MTX
14
C121
L1
20
VT/BK
4
C307
L1
20
BK/VT
3
FUSED IGNITION SWITCH OUTPUT (RUN)
BACK-UP LAMP FEED
AUTOMATIC DAY/NIGHT MIRROR
GROUND
2
Z312
20
BK/LG
S303
(8W-15-21)
Z312
18
BK
4
C10
JUNCTION BLOCK
(8W-12-2)
(8W-12-3)
3
C9
Z313
14
BK
G301
(8W-15-23)
◇ 2.7L
◇◇◇ 2.0L

8W-63 POWER SEAT

Component	Page
Body Control Module	8W-63-5
Circuit Breaker No. 1 (JB)	8W-63-2, 3
Driver Heated Seat Back	8W-63-6
Driver Heated Seat Cushion	8W-63-6
Driver Heated Seat Module	8W-63-6
Front Vertical Motor	8W-63-2, 3
Fuse 11	8W-63-4
Fuse 13	8W-63-5
Fuse 23	8W-63-5
G301	8W-63-2, 3, 6
Heated Seat Relay	8W-63-5
Heated Seat Switch	8W-63-4
Horizontal Motor	8W-63-2, 3
Junction Block	8W-63-2, 3, 4, 5
Passenger Heated Seat Back	8W-63-6
Passenger Heated Seat Cushion	8W-63-6
Passenger Heated Seat Module	8W-63-6
Power Distribution Center	8W-63-5
Power Seat Switch	8W-63-2, 3
Rear Vertical Motor	8W-63-2, 3
Recline Motor	8W-63-2

JR41

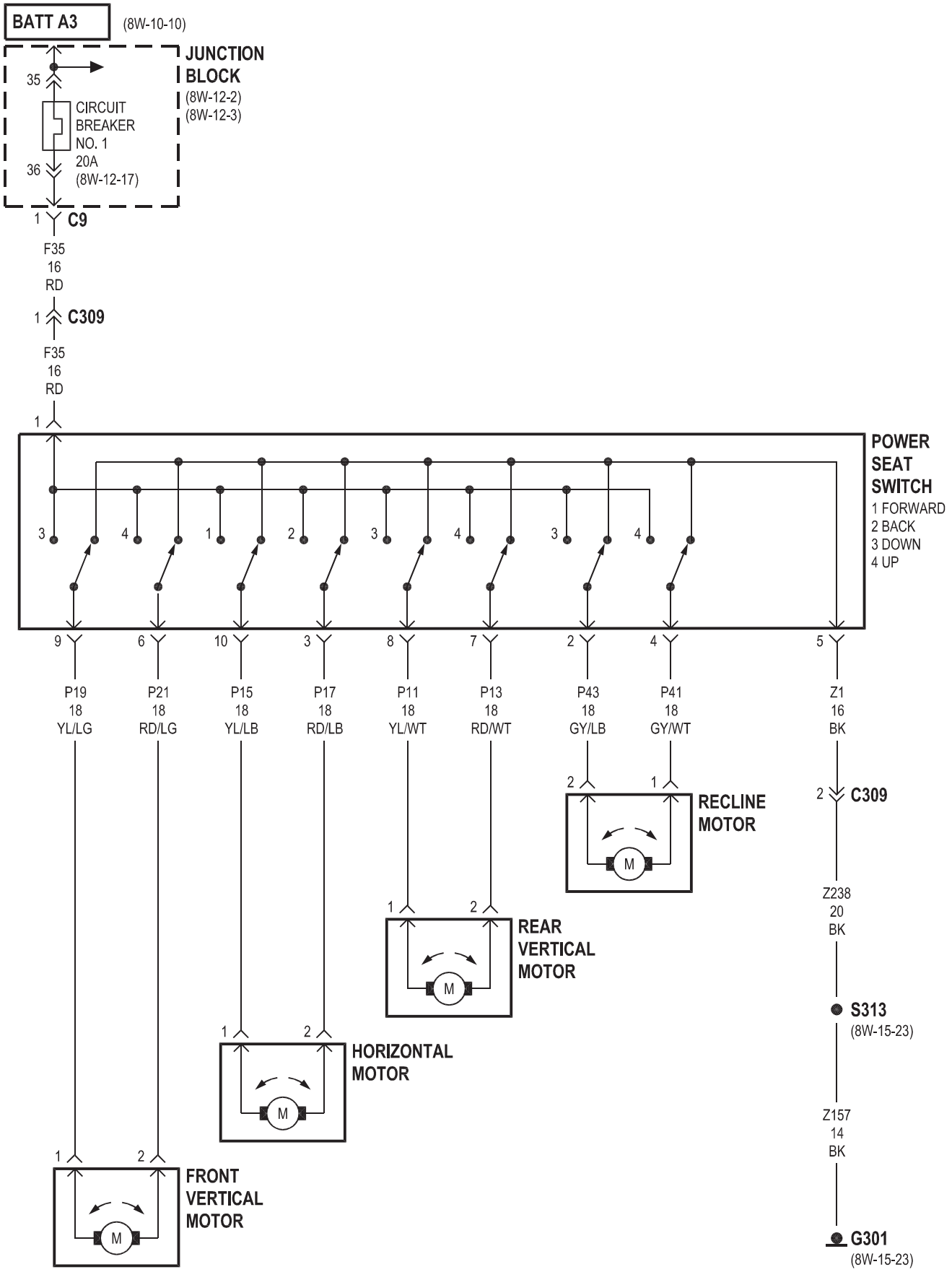
BATT A3
(8W-10-10)
JUNCTION BLOCK
(8W-12-2)
(8W-12-3)
35
CIRCUIT BREAKER NO. 1 20A
(8W-12-17)
36
1
C9
F35
16
RD
1
C309
F35
16
RD
1
POWER SEAT SWITCH
1 FORWARD
2 BACK
3 DOWN
4 UP
3
4
1
2
3
4
3
4
9
6
10
3
8
7
2
4
5
P19
18
YL/LG
P21
18
RD/LG
P15
18
YL/LB
P17
18
RD/LB
P11
18
YL/WT
P13
18
RD/WT
P43
18
GY/LB
P41
18
GY/WT
Z1
16
BK
2
1
RECLINE MOTOR
M
2
C309
Z238
20
BK
1
2
REAR VERTICAL MOTOR
M
S313
(8W-15-23)
1
2
HORIZONTAL MOTOR
M
Z157
14
BK
1
2
FRONT VERTICAL MOTOR
M
G301
(8W-15-23)

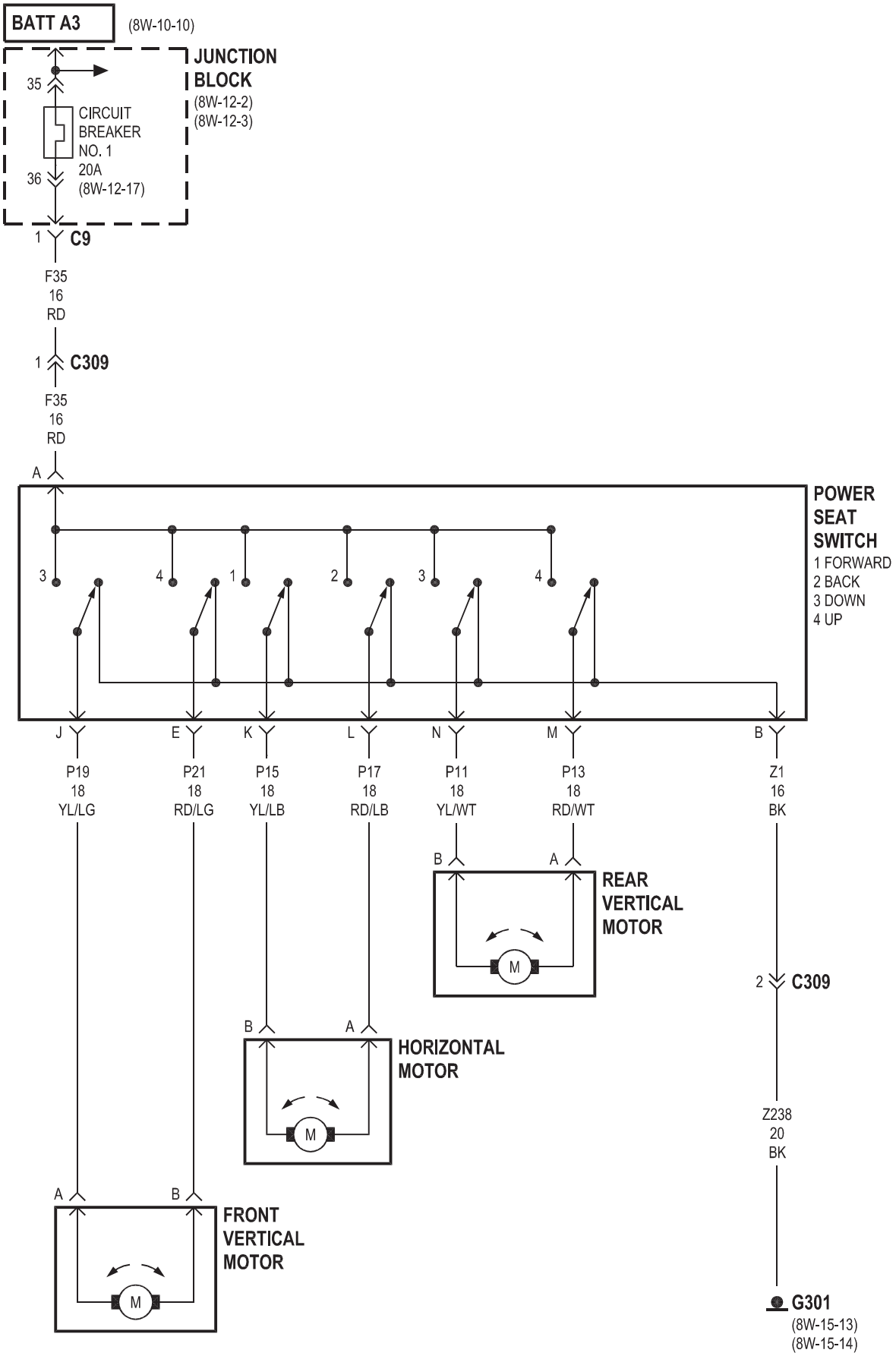
BATT A3
(8W-10-10)
JUNCTION BLOCK
(8W-12-2)
(8W-12-3)
35
CIRCUIT BREAKER NO. 1 20A
(8W-12-17)
36
1
C9
F35
16
RD
1
C309
F35
16
RD
A
POWER SEAT SWITCH
1 FORWARD
2 BACK
3 DOWN
4 UP
3
4
1
2
3
4
J
E
K
L
N
M
B
P19
18
YL/LG
P21
18
RD/LG
P15
18
YL/LB
P17
18
RD/LB
P11
18
YL/WT
P13
18
RD/WT
Z1
16
BK
B
A
REAR VERTICAL MOTOR
M
2
C309
B
A
HORIZONTAL MOTOR
M
Z238
20
BK
A
B
FRONT VERTICAL MOTOR
M
G301
(8W-15-13)
(8W-15-14)

HEATED SEAT

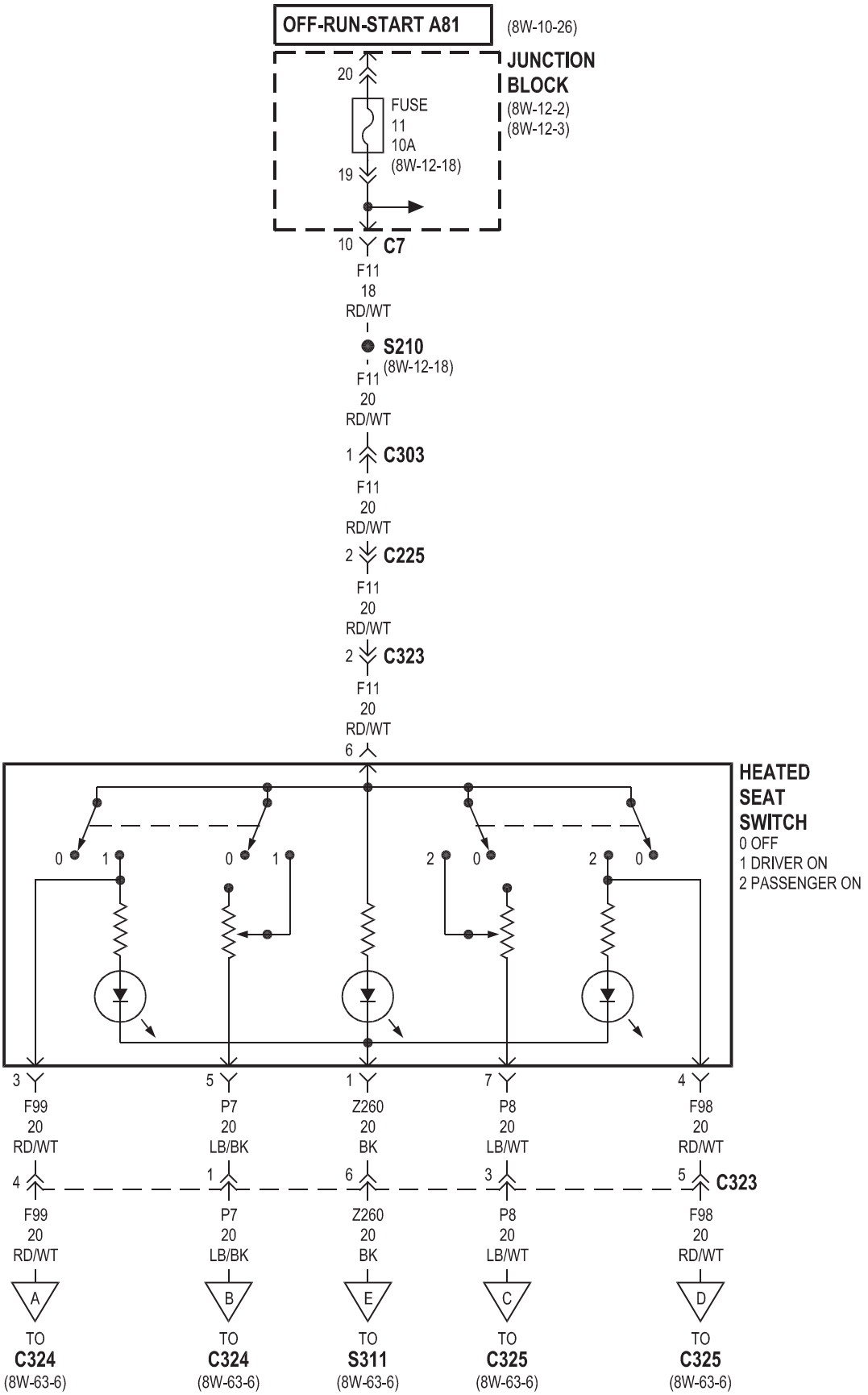
OFF-RUN-START A81
(8W-10-26)
JUNCTION BLOCK
(8W-12-2)
(8W-12-3)
20
FUSE 11 10A
(8W-12-18)
19
10
C7
F11 18 RD/WT
S210
(8W-12-18)
F11 20 RD/WT
1
C303
F11 20 RD/WT
2
C225
F11 20 RD/WT
2
C323
F11 20 RD/WT
6
HEATED SEAT SWITCH
0 OFF
1 DRIVER ON
2 PASSENGER ON
3 F99 20 RD/WT
5 P7 20 LB/BK
1 Z260 20 BK
7 P8 20 LB/WT
4 F98 20 RD/WT
4 F99 20 RD/WT
1 P7 20 LB/BK
6 Z260 20 BK
3 P8 20 LB/WT
5 C323
F98 20 RD/WT
A
B
E
C
D
TO C324 (8W-63-6)
TO C324 (8W-63-6)
TO S311 (8W-63-6)
TO C325 (8W-63-6)
TO C325 (8W-63-6)

HEATED SEAT

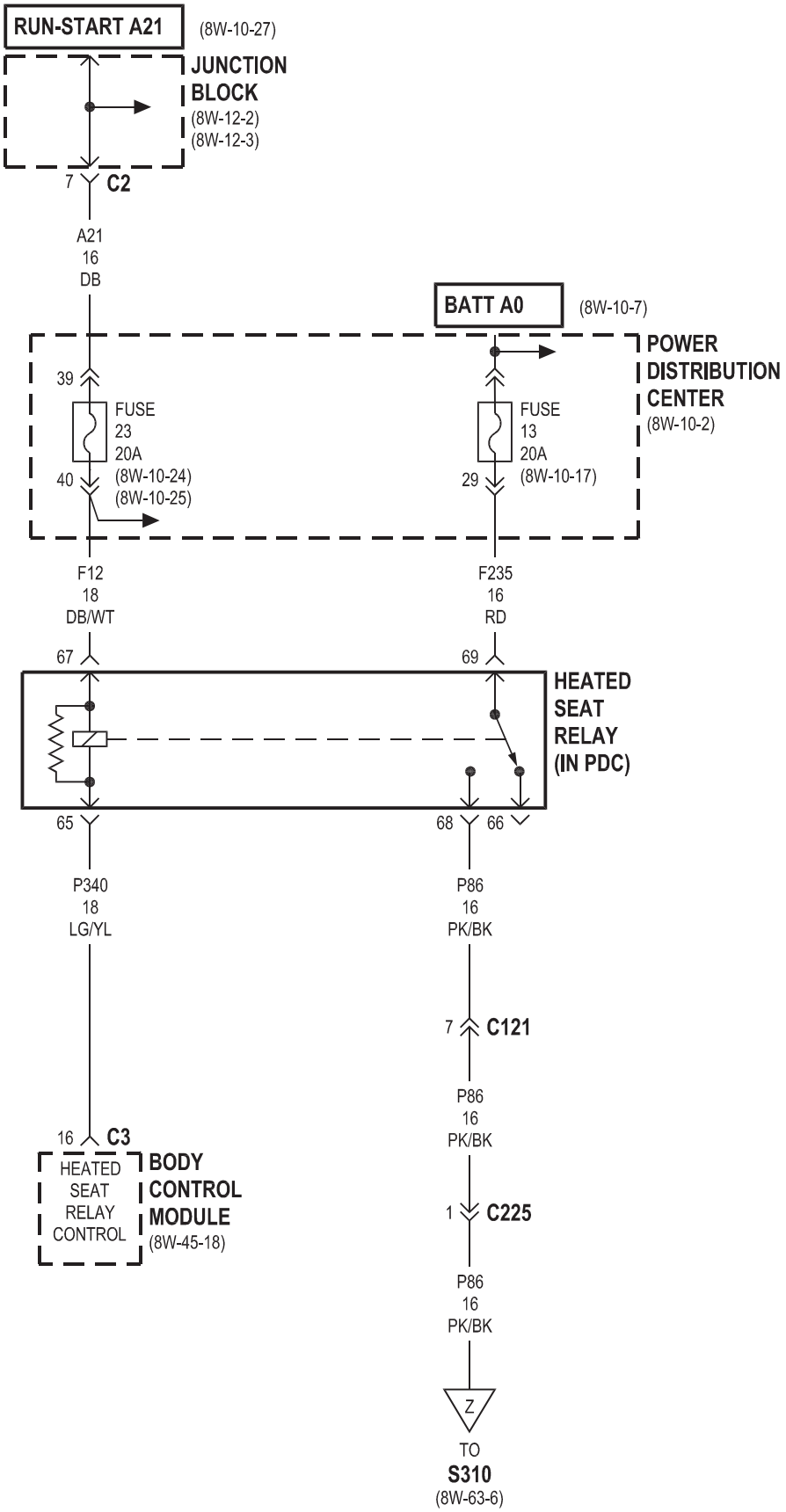
RUN-START A21
(8W-10-27)
JUNCTION BLOCK
(8W-12-2)
(8W-12-3)
7
C2
A21
16
DB
BATT A0
(8W-10-7)
POWER DISTRIBUTION CENTER
(8W-10-2)
39
FUSE
23
20A
40
(8W-10-24)
(8W-10-25)
FUSE
13
20A
29
(8W-10-17)
F12
18
DB/WT
F235
16
RD
67
69
HEATED SEAT RELAY (IN PDC)
65
68
66
P340
18
LG/YL
P86
16
PK/BK
7
C121
P86
16
PK/BK
16
C3
HEATED SEAT RELAY CONTROL
BODY CONTROL MODULE
(8W-45-18)
1
C225
P86
16
PK/BK
Z
TO
S310
(8W-63-6)

HEATED SEAT

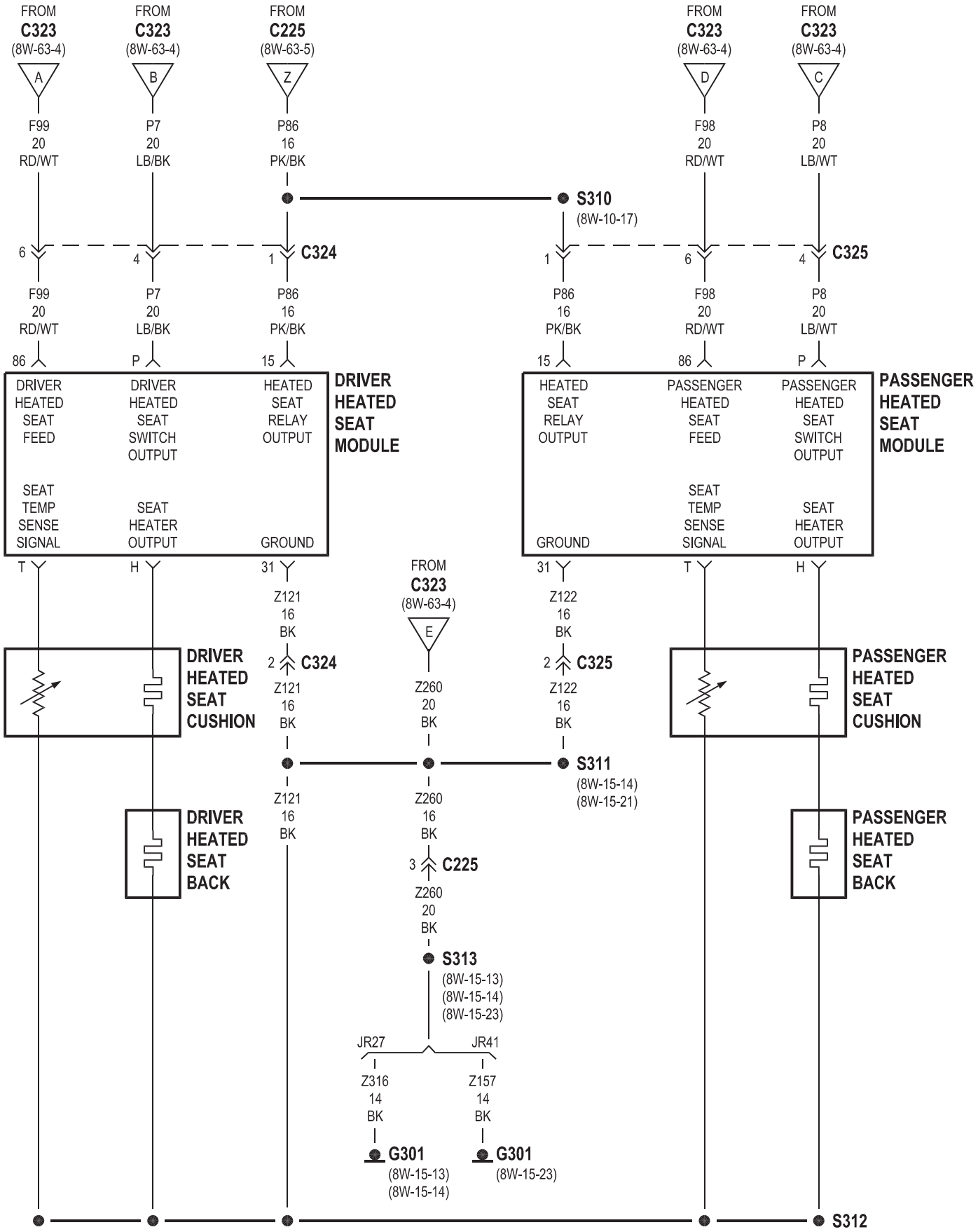
FROM C323 (8W-63-4) A
FROM C323 (8W-63-4) B
FROM C225 (8W-63-5) Z
FROM C323 (8W-63-4) D
FROM C323 (8W-63-4) C
F99 20 RD/WT
P7 20 LB/BK
P86 16 PK/BK
F98 20 RD/WT
P8 20 LB/WT
S310 (8W-10-17)
C324
C325
DRIVER HEATED SEAT FEED
DRIVER HEATED SEAT SWITCH OUTPUT
HEATED SEAT RELAY OUTPUT
SEAT TEMP SENSE SIGNAL
SEAT HEATER OUTPUT
GROUND
DRIVER HEATED SEAT MODULE
PASSENGER HEATED SEAT FEED
PASSENGER HEATED SEAT SWITCH OUTPUT
PASSENGER HEATED SEAT MODULE
Z121 16 BK
Z122 16 BK
FROM C323 (8W-63-4) E
Z260 20 BK
DRIVER HEATED SEAT CUSHION
PASSENGER HEATED SEAT CUSHION
S311 (8W-15-14) (8W-15-21)
DRIVER HEATED SEAT BACK
PASSENGER HEATED SEAT BACK
C225
S313 (8W-15-13) (8W-15-14) (8W-15-23)
JR27
JR41
Z316 14 BK
Z157 14 BK
G301 (8W-15-13) (8W-15-14)
G301 (8W-15-23)
S312

8W-64 POWER SUNROOF

Component	Page
Circuit Breaker No. 2 (JB)	8W-64-2
G301	8W-64-2
Junction Block	8W-64-2
Sunroof Control Module	8W-64-2
Sunroof Switch	8W-64-2

JR41

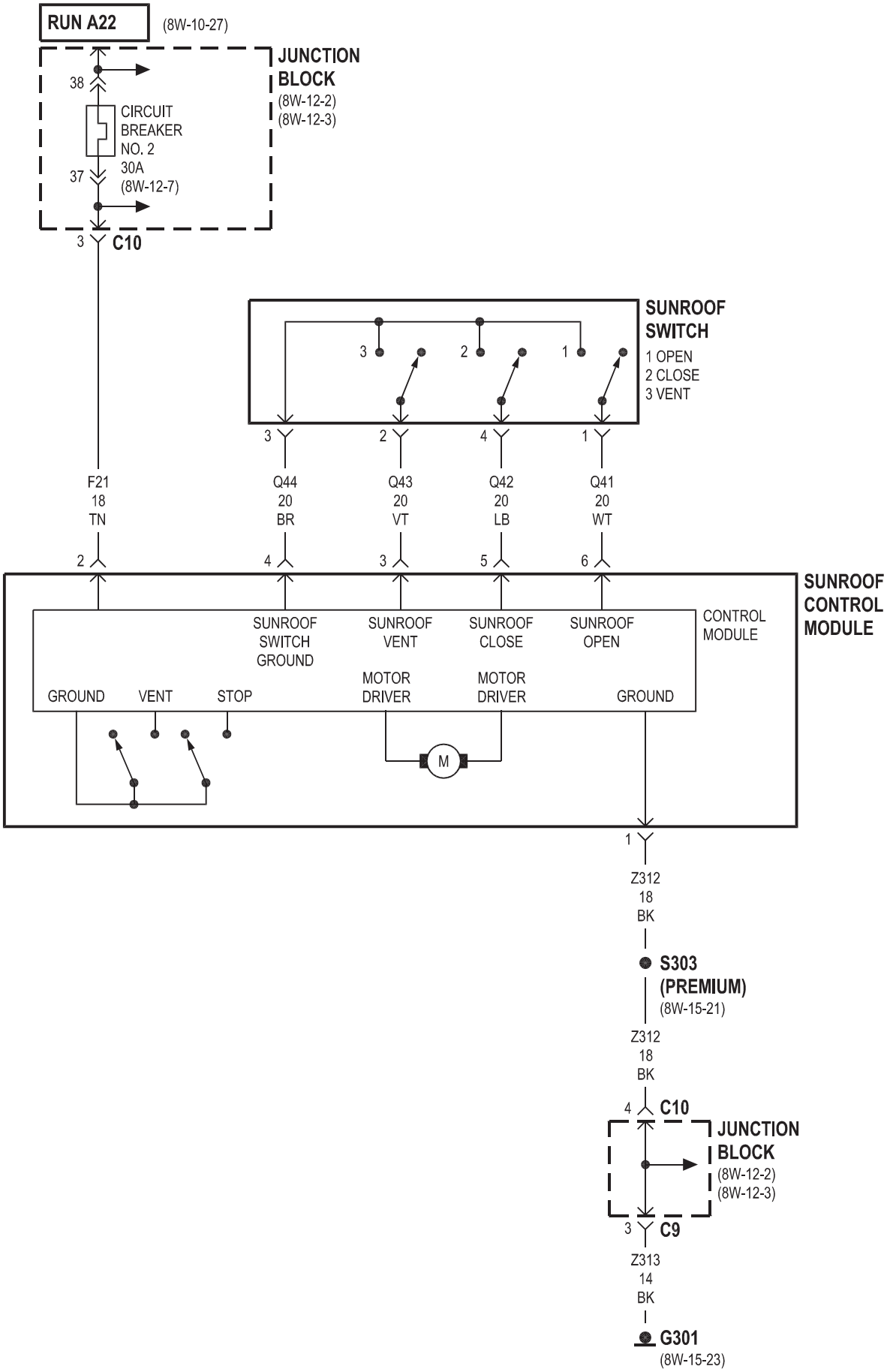
RUN A22
(8W-10-27)
JUNCTION BLOCK
(8W-12-2)
(8W-12-3)
38
CIRCUIT BREAKER NO. 2 30A
(8W-12-7)
37
3
C10
SUNROOF SWITCH
1 OPEN
2 CLOSE
3 VENT
3
2
1
3
2
4
1
F21
18
TN
Q44
20
BR
Q43
20
VT
Q42
20
LB
Q41
20
WT
2
4
3
5
6
SUNROOF CONTROL MODULE
CONTROL MODULE
SUNROOF SWITCH GROUND
SUNROOF VENT
SUNROOF CLOSE
SUNROOF OPEN
GROUND
VENT
STOP
MOTOR DRIVER
MOTOR DRIVER
GROUND
M
1
Z312
18
BK
S303
(PREMIUM)
(8W-15-21)
Z312
18
BK
4
C10
JUNCTION BLOCK
(8W-12-2)
(8W-12-3)
3
C9
Z313
14
BK
G301
(8W-15-23)

8W-66 POWER TOP

Component	Page
Body Control Module	8W-66-2, 3
Fuse 4	8W-66-2
Fuse 17	8W-66-3
G301	8W-66-2
G302	8W-66-3
Junction Block	8W-66-2
Power Distribution Center	8W-66-3
Power Top Pump Motor	8W-66-3
Power Top Switch	8W-66-2
Power Top Up/Down Relays	8W-66-3

JR27

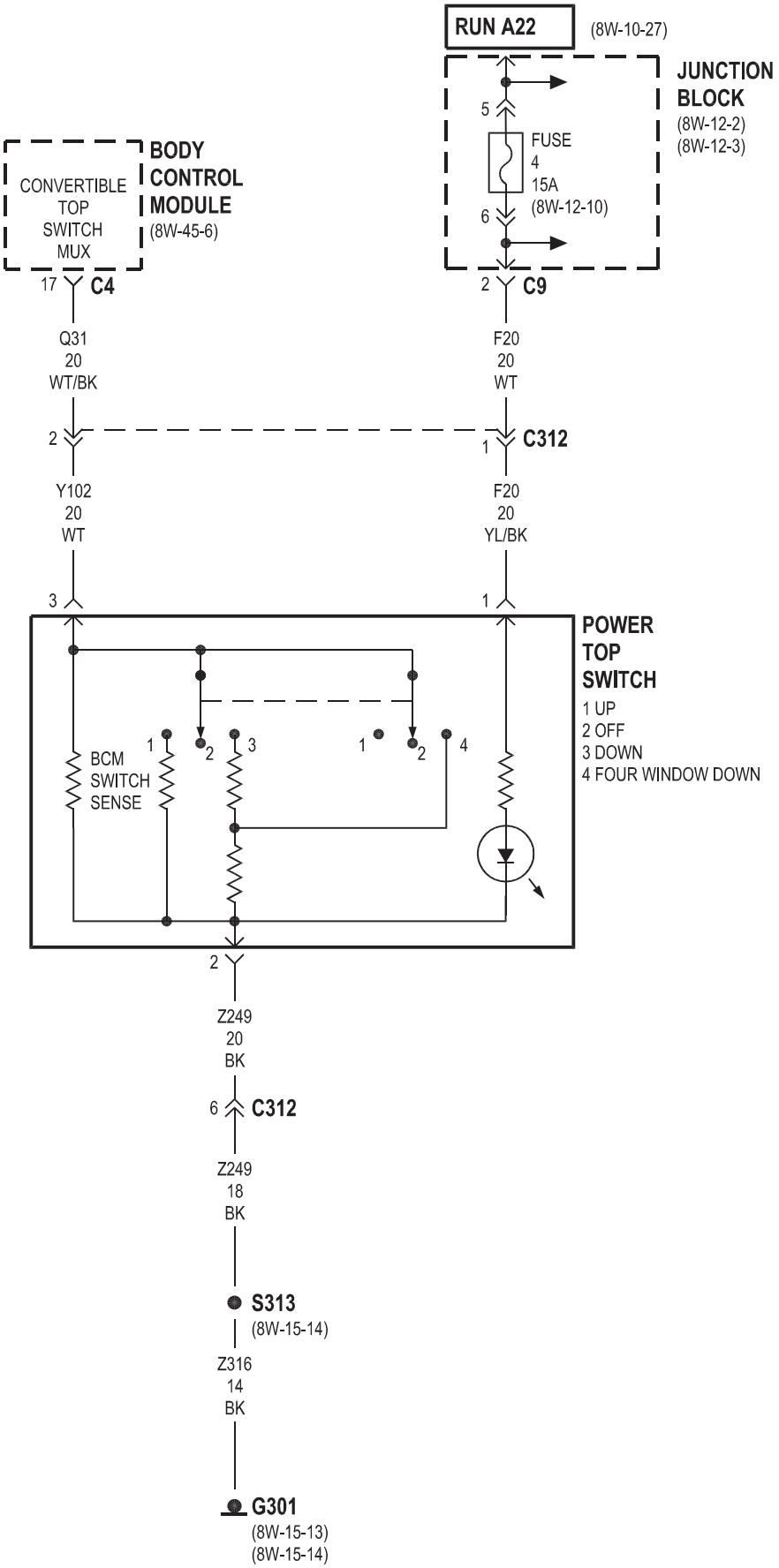
RUN A22
(8W-10-27)
JUNCTION BLOCK
(8W-12-2)
(8W-12-3)
5
FUSE
4
15A
(8W-12-10)
6
BODY CONTROL MODULE
(8W-45-6)
CONVERTIBLE TOP SWITCH MUX
17
C4
2
C9
Q31
20
WT/BK
F20
20
WT
2
1
C312
Y102
20
WT
F20
20
YL/BK
3
1
POWER TOP SWITCH
1 UP
2 OFF
3 DOWN
4 FOUR WINDOW DOWN
BCM SWITCH SENSE
1
2
3
1
2
4
2
Z249
20
BK
6
C312
Z249
18
BK
S313
(8W-15-14)
Z316
14
BK
G301
(8W-15-13)
(8W-15-14)

JR27

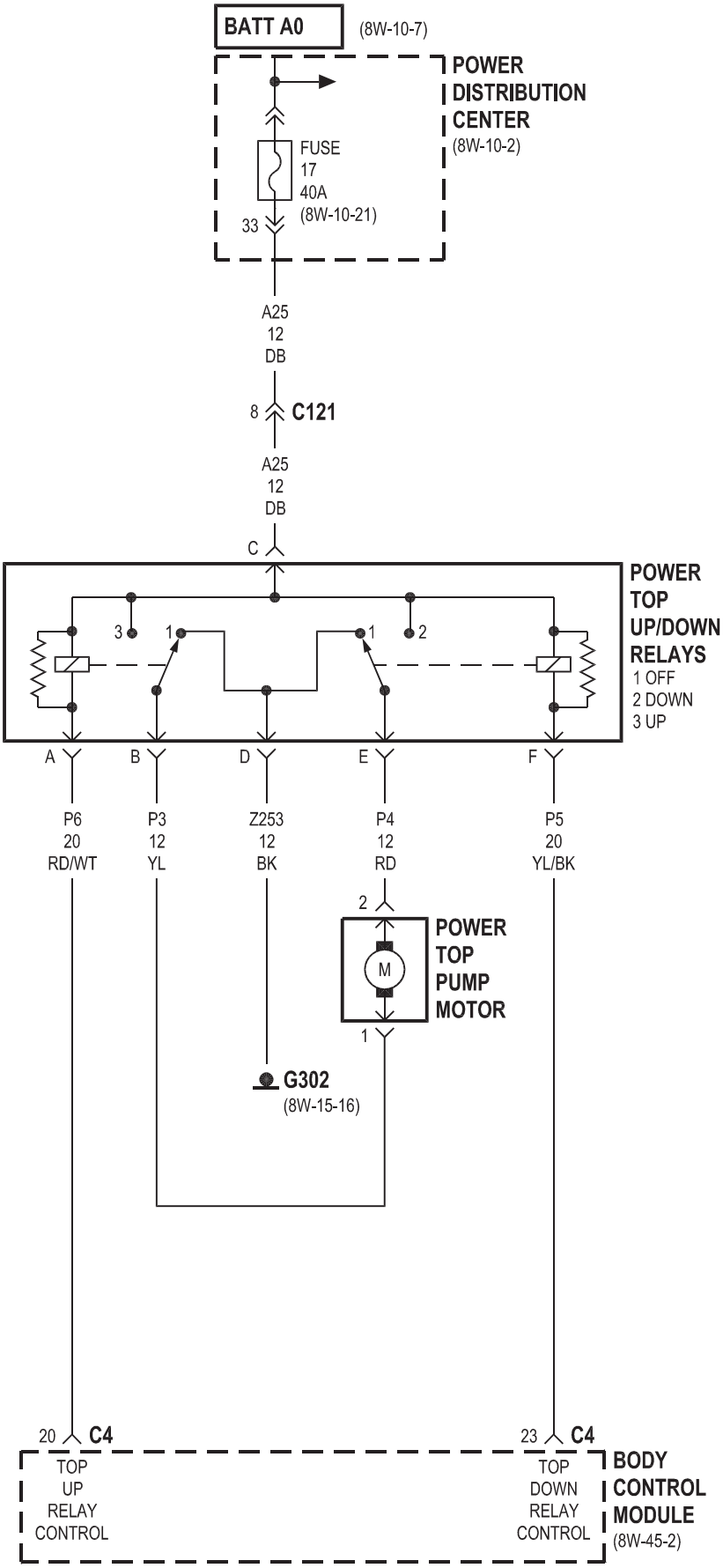
BATT A0
(8W-10-7)
POWER DISTRIBUTION CENTER
(8W-10-2)
FUSE 17 40A
(8W-10-21)
33
A25 12 DB
8
C121
A25 12 DB
C
POWER TOP UP/DOWN RELAYS
1 OFF
2 DOWN
3 UP
3
1
1
2
A
B
D
E
F
P6 20 RD/WT
P3 12 YL
Z253 12 BK
P4 12 RD
P5 20 YL/BK
2
M
POWER TOP PUMP MOTOR
1
G302
(8W-15-16)
20
C4
TOP UP RELAY CONTROL
23
C4
TOP DOWN RELAY CONTROL
BODY CONTROL MODULE
(8W-45-2)

8W-70 SPLICE INFORMATION

Component	Page
S100	8W-10-13, 14
S102	8W-10-12
S103	8W-10-16
S104	8W-10-17
S105	8W-10-24, 25
S106	8W-10-15
S108	8W-10-17
S109	8W-15-3
S110	8W-70-4, 7
S111	8W-31-3
S112	8W-10-14
S113	8W-20-2, 3
S115	8W-70-2
S116	8W-70-5
S117	8W-70-5, 6
S118	8W-10-20
S119	8W-10-9
S120	8W-18-2
S121	8W-31-12
S122	8W-10-22
S123	8W-15-4
S124	8W-70-4
S125	8W-31-4, 12
S126	8W-12-10
S127	8W-10-20
S134	8W-30-28
S135	8W-15-2
S137	8W-10-19
S139	8W-10-19
S143	8W-10-19
S148	8W-10-18
S149	8W-15-2
S150	8W-10-18
S155	8W-70-3
S156	8W-70-6
S200	8W-45-10
S201	8W-45-8
S202	8W-45-11, 12
S203	8W-12-15
S207	8W-51-5, 11
S208	8W-50-12
S209	8W-12-12
S210	8W-12-18
S211	8W-12-12
S212	8W-45-10
S214	8W-45-8
S215	8W-12-7
S216	8W-47-11
S217	8W-47-11
S218	8W-33-5, 6
S219	8W-33-5, 6
S220	8W-12-11
S221	8W-18-4
S222	8W-15-11
S223	8W-15-11
S224	8W-50-6
S225	8W-12-15
S226	8W-50-8
S227	8W-50-10
S228	8W-50-6
S301	8W-15-16, 24
S302	8W-12-13
S303	8W-15-21
S304	8W-15-15
S305	8W-15-15, 20
S306	8W-45-12
S307	8W-15-18, 19
S310	8W-10-17
S311	8W-15-14, 21
S312	8W-63-6
S313	8W-15-13, 14, 23
S318	8W-12-22
S319	8W-12-22
S320	8W-15-11
S321	8W-15-9
S324	8W-51-11
S326	8W-15-16, 20
S327	8W-12-12
S330	8W-12-7
S331	8W-12-23
S332	8W-15-16
S333	8W-15-15
S334	8W-10-15
S335	8W-15-17
S336	8W-12-22

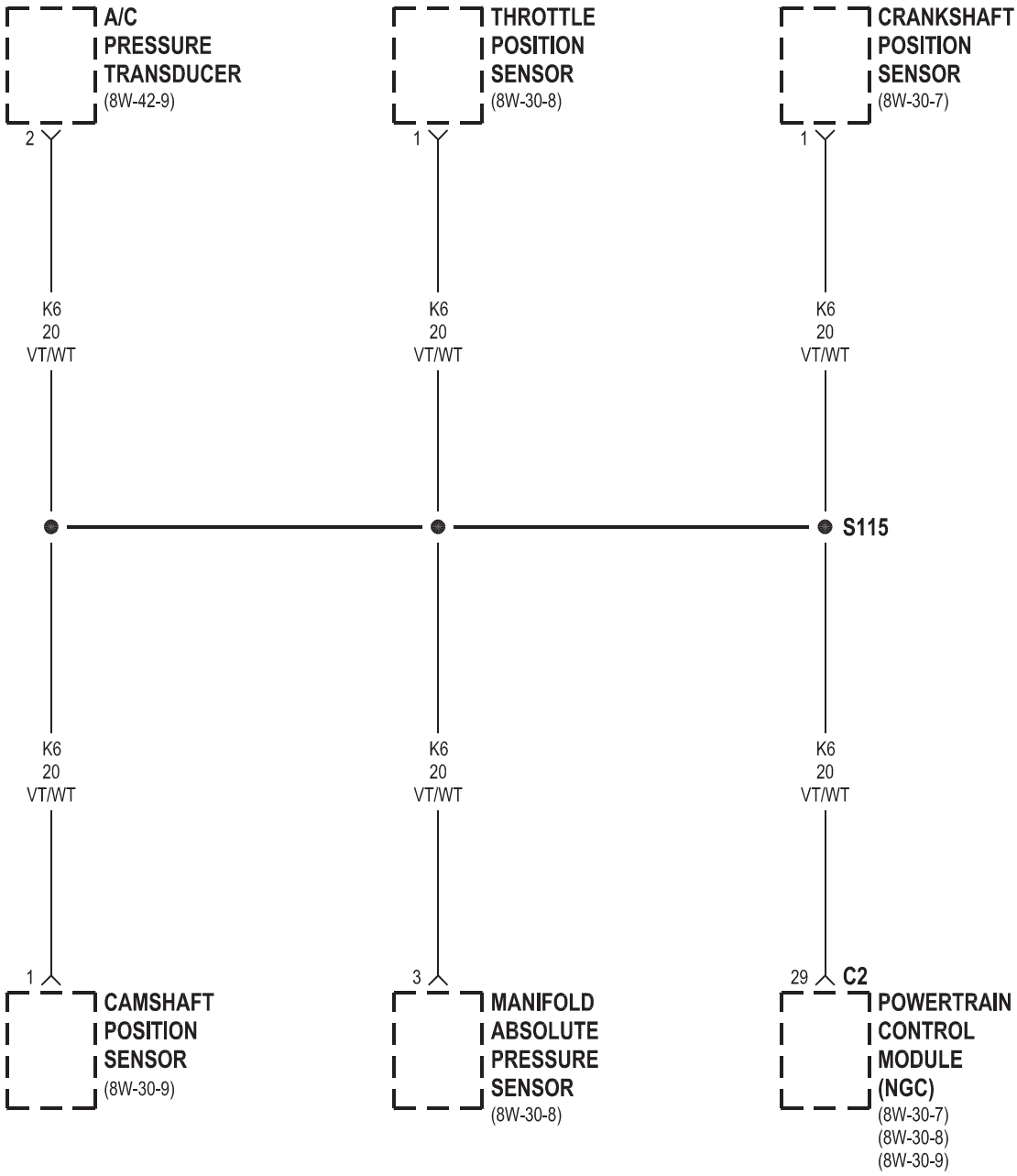
A/C
PRESSURE
TRANSDUCER
(8W-42-9)
THROTTLE
POSITION
SENSOR
(8W-30-8)
CRANKSHAFT
POSITION
SENSOR
(8W-30-7)
2
1
1
K6
20
VT/WT
K6
20
VT/WT
K6
20
VT/WT
S115
K6
20
VT/WT
K6
20
VT/WT
K6
20
VT/WT
1
3
29
C2
CAMSHAFT
POSITION
SENSOR
(8W-30-9)
MANIFOLD
ABSOLUTE
PRESSURE
SENSOR
(8W-30-8)
POWERTRAIN
CONTROL
MODULE
(NGC)
(8W-30-7)
(8W-30-8)
(8W-30-9)

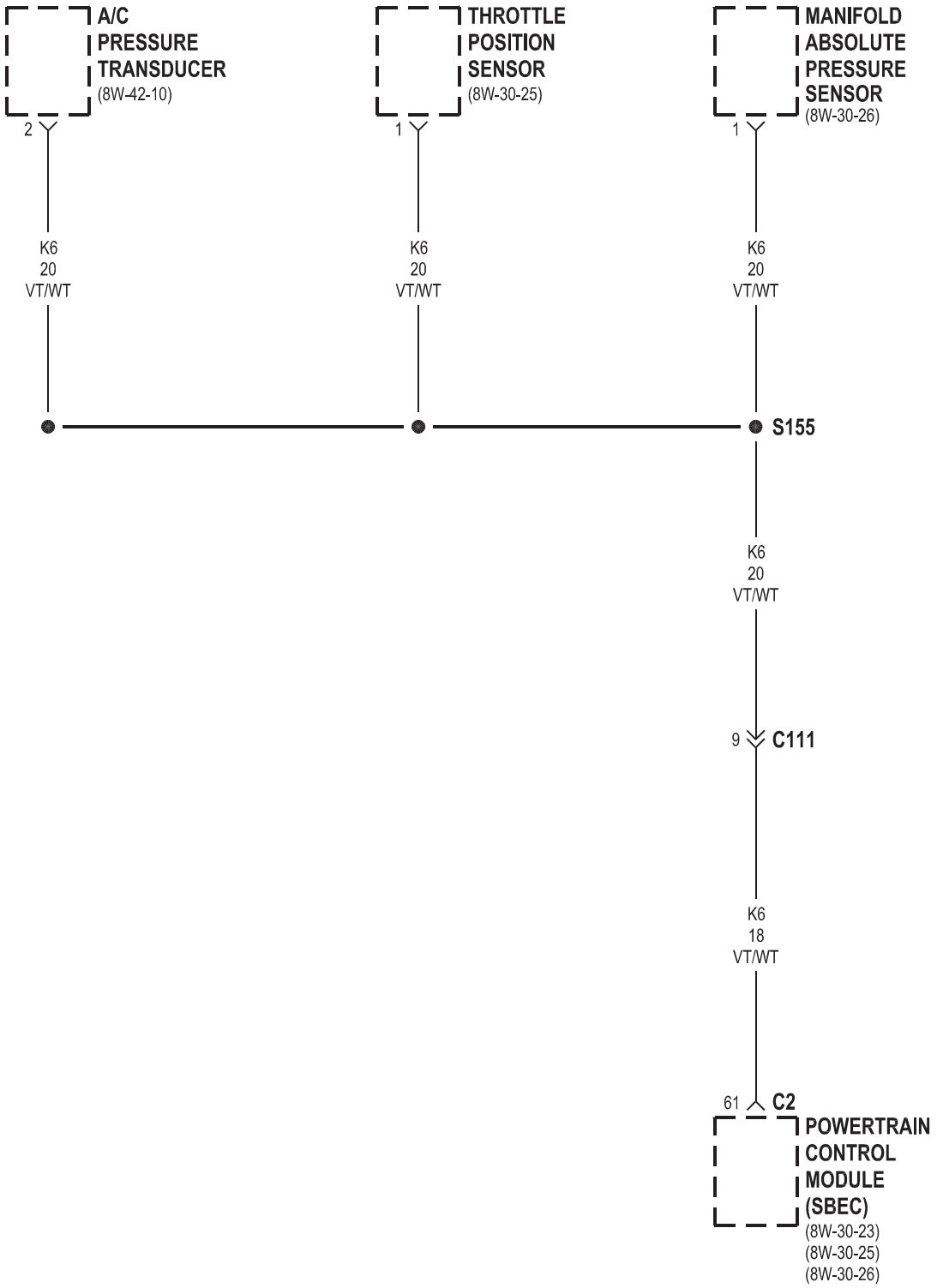
A/C
PRESSURE
TRANSDUCER
(8W-42-10)
2
THROTTLE
POSITION
SENSOR
(8W-30-25)
1
MANIFOLD
ABSOLUTE
PRESSURE
SENSOR
(8W-30-26)
1
K6
20
VT/WT
K6
20
VT/WT
K6
20
VT/WT
S155
K6
20
VT/WT
9
C111
K6
18
VT/WT
61
C2
POWERTRAIN
CONTROL
MODULE
(SBEC)
(8W-30-23)
(8W-30-25)
(8W-30-26)

2.7L

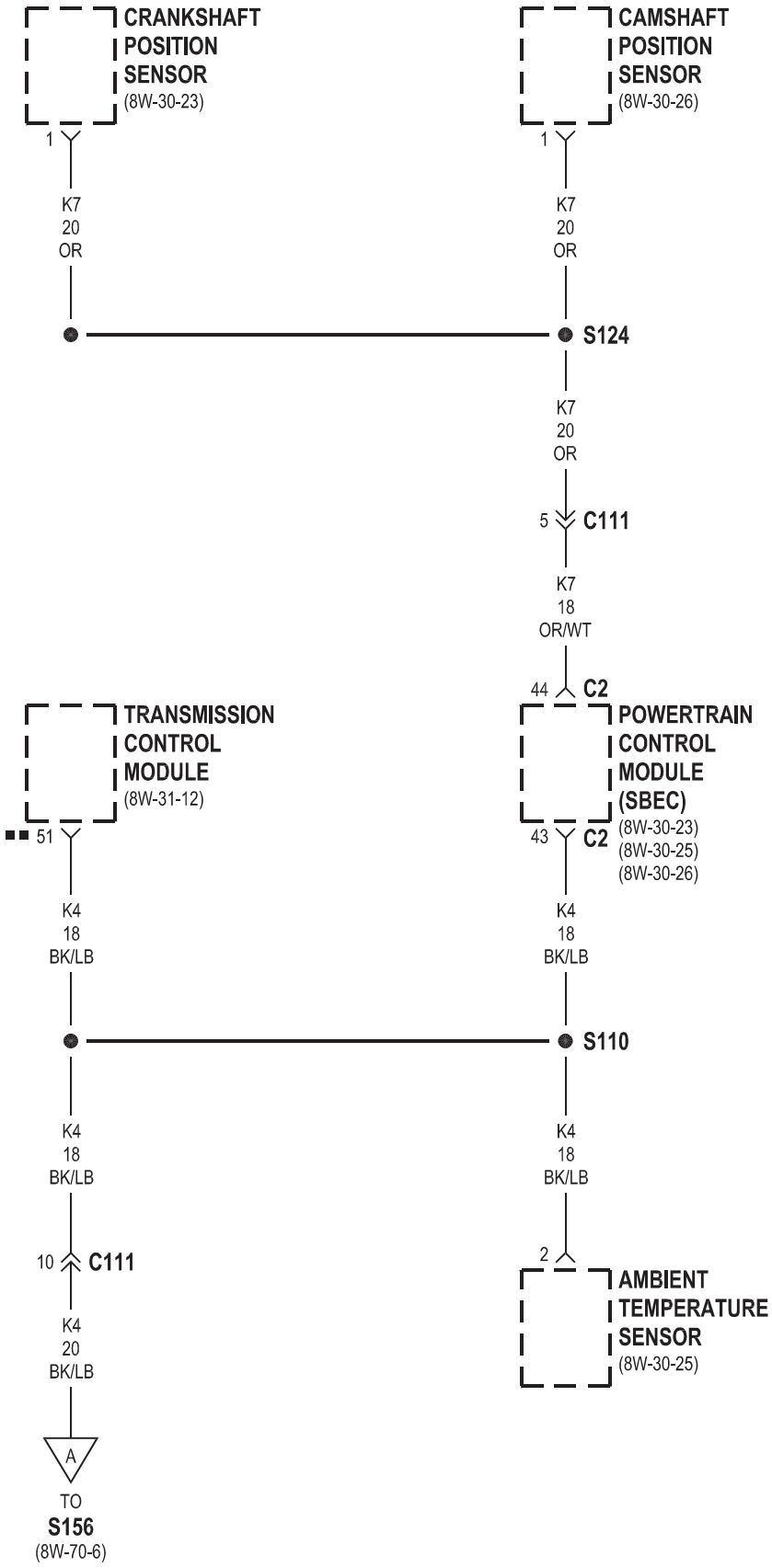
CRANKSHAFT POSITION SENSOR (8W-30-23)
1
K7 20 OR
CAMSHAFT POSITION SENSOR (8W-30-26)
1
K7 20 OR
S124
K7 20 OR
5
C111
K7 18 OR/WT
44
C2
TRANSMISSION CONTROL MODULE (8W-31-12)
51
K4 18 BK/LB
POWERTRAIN CONTROL MODULE (SBEC) (8W-30-23) (8W-30-25) (8W-30-26)
43
C2
K4 18 BK/LB
S110
K4 18 BK/LB
K4 18 BK/LB
10
C111
K4 20 BK/LB
A
TO
S156
(8W-70-6)
2
AMBIENT TEMPERATURE SENSOR (8W-30-25)

■■ EATX

2.0L/2.4L

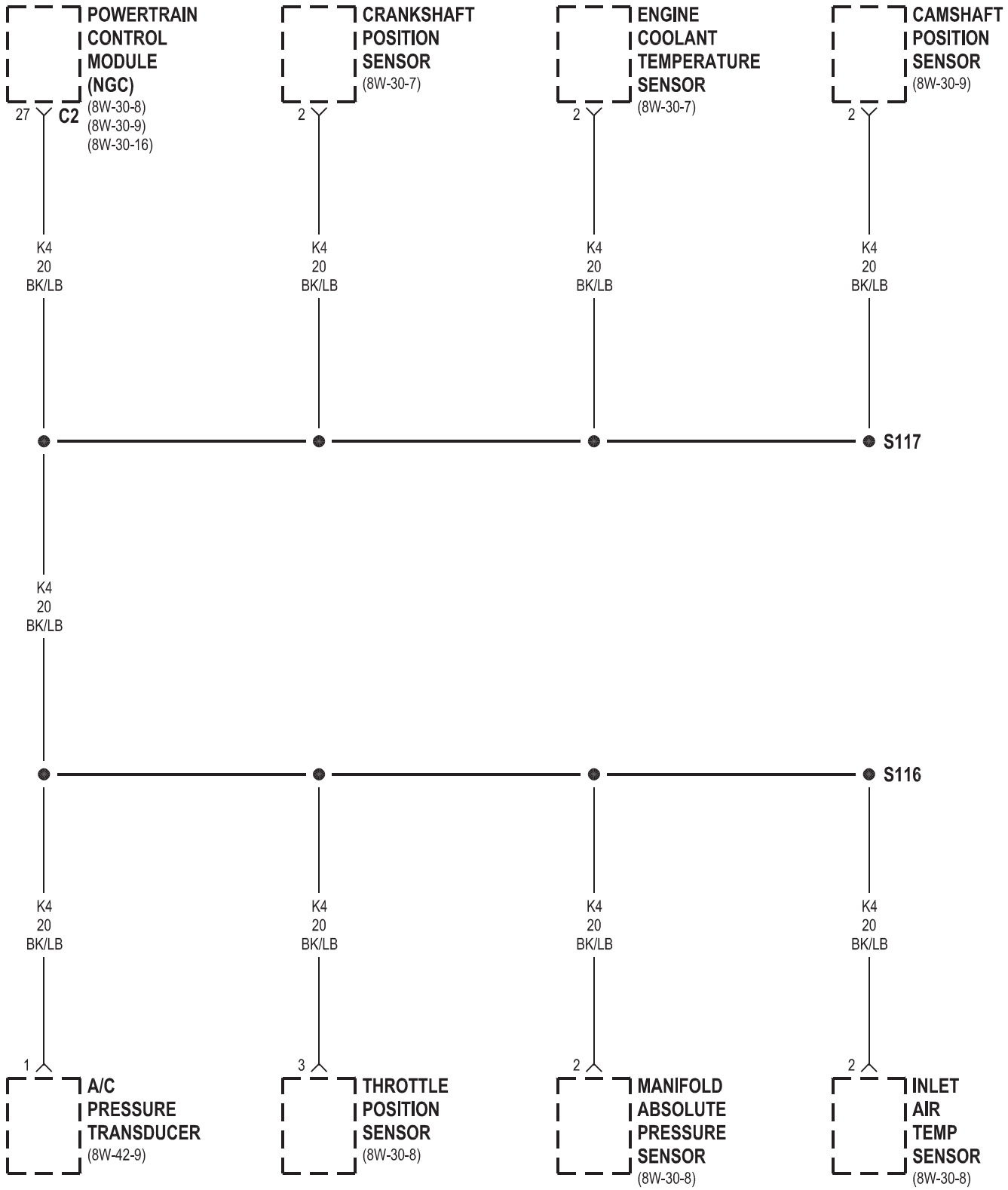
POWERTRAIN CONTROL MODULE (NGC)
(8W-30-8)
(8W-30-9)
(8W-30-16)
27
C2
CRANKSHAFT POSITION SENSOR
(8W-30-7)
2
ENGINE COOLANT TEMPERATURE SENSOR
(8W-30-7)
2
CAMSHAFT POSITION SENSOR
(8W-30-9)
2
K4
20
BK/LB
S117
S116
1
A/C PRESSURE TRANSDUCER
(8W-42-9)
3
THROTTLE POSITION SENSOR
(8W-30-8)
MANIFOLD ABSOLUTE PRESSURE SENSOR
(8W-30-8)
INLET AIR TEMP SENSOR
(8W-30-8)

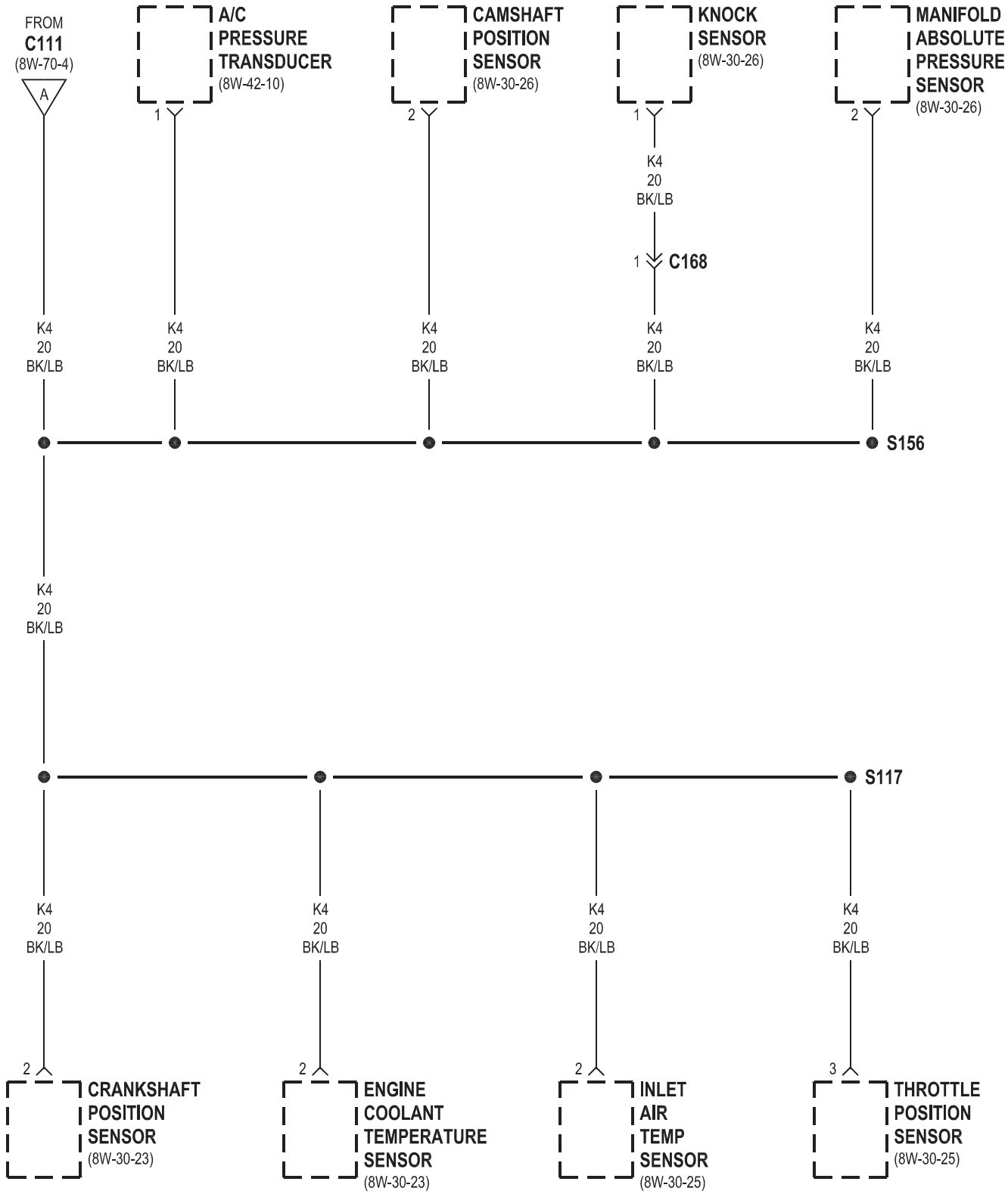
FROM
C111
(8W-70-4)
A
A/C
PRESSURE
TRANSDUCER
(8W-42-10)
1
CAMSHAFT
POSITION
SENSOR
(8W-30-26)
2
KNOCK
SENSOR
(8W-30-26)
1
MANIFOLD
ABSOLUTE
PRESSURE
SENSOR
(8W-30-26)
2
K4
20
BK/LB
1
C168
S156
S117
2
CRANKSHAFT
POSITION
SENSOR
(8W-30-23)
ENGINE
COOLANT
TEMPERATURE
SENSOR
(8W-30-23)
INLET
AIR
TEMP
SENSOR
(8W-30-25)
3
THROTTLE
POSITION
SENSOR
(8W-30-25)

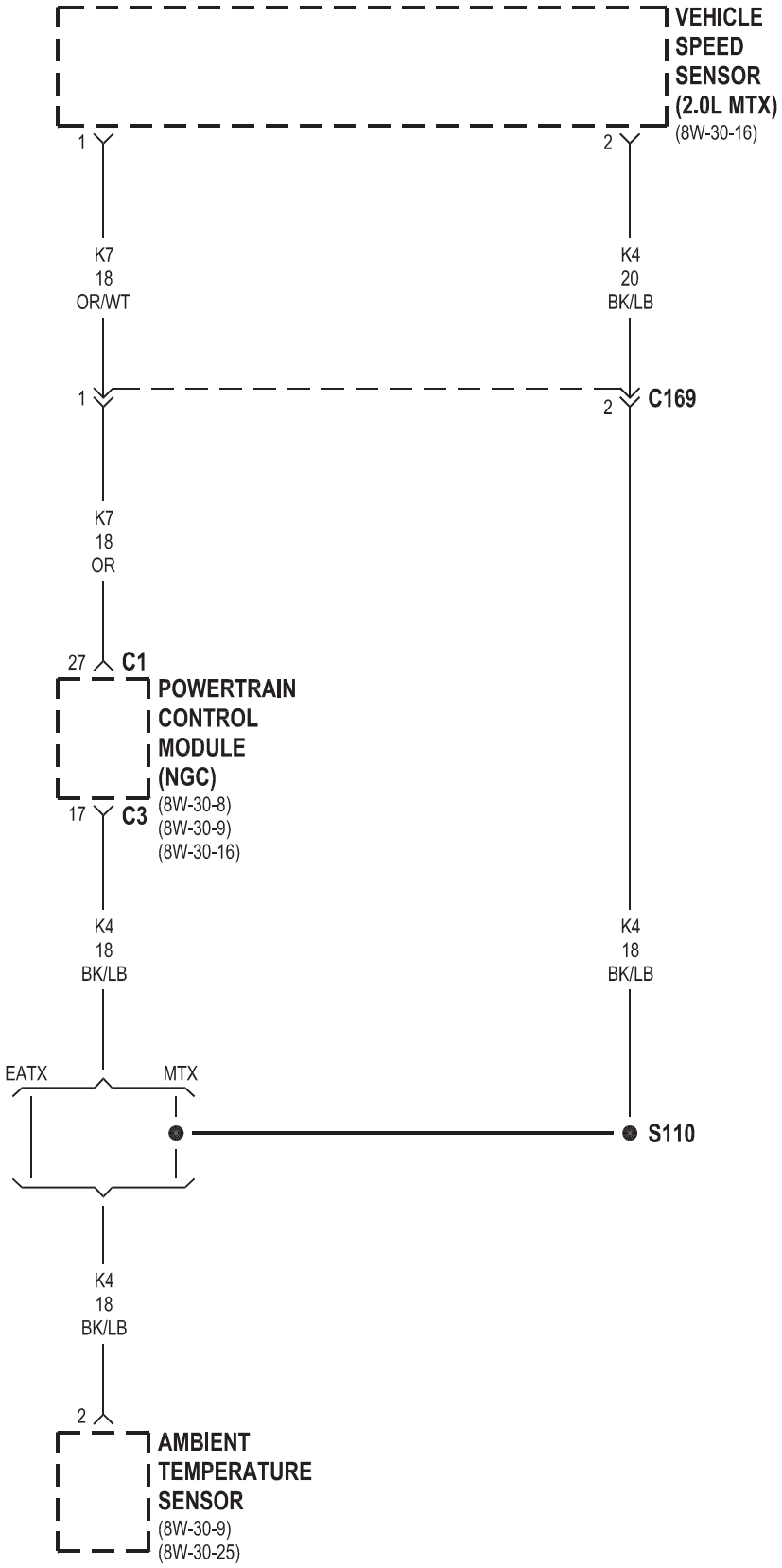
VEHICLE SPEED SENSOR (2.0L MTX)
(8W-30-16)
1
2
K7
18
OR/WT
K4
20
BK/LB
1
2
C169
K7
18
OR
27
C1
POWERTRAIN CONTROL MODULE (NGC)
(8W-30-8)
(8W-30-9)
(8W-30-16)
17
C3
K4
18
BK/LB
K4
18
BK/LB
EATX
MTX
S110
K4
18
BK/LB
2
AMBIENT TEMPERATURE SENSOR
(8W-30-9)
(8W-30-25)

8W-80 CONNECTOR PIN-OUTS

Component	Page
A/C Compressor Clutch	8W-80-5
A/C Evaporator Temperature Sensor	8W-80-5
A/C Pressure Transducer	8W-80-5
A/C-Heater Control C1 (MTC)	8W-80-5
A/C-Heater Control C2 (MTC)	8W-80-6
Airbag Control Module (ORC) (Base)	8W-80-6
Airbag Control Module C1 (ORC) (Premium)	8W-80-7
Airbag Control Module C2 (ORC) (Premium)	8W-80-8
Ambient Temp Sensor	8W-80-8
Auto Headlamp Relay (Premium)	8W-80-9
Automatic Day/Night Mirror	8W-80-9
Automatic Temperature Control Head	8W-80-9
Autostick Switch	8W-80-10
Back-Up Lamp Switch (2.0L MTX)	8W-80-10
Back-Up Lamp Switch (2.7L MTX)	8W-80-10
Blend Door Actuator	8W-80-10
Blower Motor	8W-80-11
Blower Motor Power Module C1 (ATC)	8W-80-11
Blower Motor Power Module C2 (ATC)	8W-80-11
Blower Motor Resistor Block (MTC)	8W-80-11
Body Control Module C1	8W-80-12
Body Control Module C2	8W-80-12
Body Control Module C3	8W-80-13
Body Control Module C4	8W-80-13
Brake Fluid Level Switch	8W-80-14
Brake Lamp Switch	8W-80-14
Brake Transmission Shift Interlock Solenoid	8W-80-14
C100	8W-80-14
C100	8W-80-15
C101	8W-80-15
C101	8W-80-15
C104 (EATX)	8W-80-16
C104 (EATX)	8W-80-16
C105 (EATX)	8W-80-16
C105 (EATX)	8W-80-17
C111	8W-80-17
C111	8W-80-18
C113 (2.7L)	8W-80-18
C113 (2.7L)	8W-80-18
C121	8W-80-19
C121	8W-80-19
C168 (2.7L)	8W-80-20
C168 (2.7L)	8W-80-20
C169 (2.0L MTX)	8W-80-20
C169 (2.0L MTX)	8W-80-20
C169 (2.7L MTX)	8W-80-21
C169 (2.7L MTX)	8W-80-21
C200 (ATC)	8W-80-21
C200 (ATC)	8W-80-22
C200 (MTC)	8W-80-22
C200 (MTC)	8W-80-22
C225	8W-80-23
C225	8W-80-23
C300 (JR27/JR41 Export)	8W-80-23
C300 (JR41 Except Export)	8W-80-23
C300	8W-80-24
C301 (JR27/JR41 Export)	8W-80-24
C301 (JR41 Except Export)	8W-80-24
C301	8W-80-24
C302	8W-80-25
C302	8W-80-25
C303	8W-80-25
C303	8W-80-26
C304 (JR41)	8W-80-26
C304 (JR41)	8W-80-26
C305 (JR41)	8W-80-27
C305 (JR41)	8W-80-27
C306	8W-80-27
C306	8W-80-27
C307 (Except JR41 Export)	8W-80-28
C307 (Except JR41 Export)	8W-80-28
C307 (JR41 Export)	8W-80-28
C307 (JR41 Export)	8W-80-28
C308 (JR41)	8W-80-28
C308 (JR41)	8W-80-29
C309 (JR27 Power Seat)	8W-80-29
C309 (JR27 Power Seat)	8W-80-29
C309 (JR41 Power Seat)	8W-80-29
C309 (JR41 Power Seat)	8W-80-30
C310	8W-80-30
C310	8W-80-30
C311	8W-80-31
C311	8W-80-31
C312 (Except JR41 Base)	8W-80-32
C312 (Except JR41 Base)	8W-80-32
C315	8W-80-32
C315	8W-80-33
C316	8W-80-33
C316	8W-80-34
C318 (JR41)	8W-80-34
C318 (JR41)	8W-80-34
C320 (JR27)	8W-80-35
C320 (JR27)	8W-80-35
C320 (JR41)	8W-80-35
C320 (JR41)	8W-80-35
C321	8W-80-35
C321	8W-80-36
C322 (JR27 Export)	8W-80-36
C322 (JR27 Export)	8W-80-36
C323	8W-80-36
C323	8W-80-37

Component	Page
C324	8W-80-37
C324	8W-80-37
C325	8W-80-37
C325	8W-80-38
Camshaft Position Sensor	8W-80-38
CD Changer	8W-80-38
Center High Mounted Stop Lamp (JR27)	8W-80-38
Center High Mounted Stop Lamp (JR41)	8W-80-39
Clockspring C1	8W-80-39
Clockspring C2	8W-80-39
Clockspring C3	8W-80-39
Clutch Interlock/Upstop Switch (MTX)	8W-80-39
Coil On Plug No. 1 (2.7L)	8W-80-40
Coil On Plug No. 2 (2.7L)	8W-80-40
Coil On Plug No. 3 (2.7L)	8W-80-40
Coil On Plug No. 4 (2.7L)	8W-80-40
Coil On Plug No. 5 (2.7L)	8W-80-40
Coil On Plug No. 6 (2.7L)	8W-80-41
Compass/Mini-Trip Computer	8W-80-41
Controller Antilock Brake	8W-80-41
Crankshaft Position Sensor	8W-80-42
Data Link Connector	8W-80-42
Decklid Cylinder Lock Switch (VTSS)	8W-80-42
Decklid Release Solenoid/Ajar Switch (JR27/JR41 Export)	8W-80-43
Decklid Release Solenoid/Ajar Switch (JR41 Except Export)	8W-80-43
Decklid Release Switch	8W-80-43
Dome Lamp (JR41)	8W-80-43
Driver Airbag Squib 1	8W-80-43
Driver Airbag Squib 2	8W-80-44
Driver Cylinder Lock Switch (VTSS)	8W-80-44
Driver Door Lock Motor/Ajar Switch	8W-80-44
Driver Door Lock Switch	8W-80-44
Driver Heated Seat Module	8W-80-45
Driver Power Window Motor (JR27)	8W-80-45
Driver Power Window Motor (JR41)	8W-80-45
Driver Seat Belt Solenoid (JR27 Export)	8W-80-45
Driver Seat Belt Switch (JR41 Except Export)	8W-80-46
Driver Seat Belt Tensioner (JR27)	8W-80-46
Driver Seat Belt Tensioner (JR41)	8W-80-46
Engine Coolant Temp Sensor	8W-80-46
EVAP/Purge Solenoid	8W-80-47
Fog Lamp Relay (Premium)	8W-80-47
Front Vertical Motor (JR27)	8W-80-47
Front Vertical Motor (JR41)	8W-80-47
Front Washer Pump Motor	8W-80-47
Front Wiper Motor	8W-80-48
Fuel Injector No. 1	8W-80-48
Fuel Injector No. 2	8W-80-48
Fuel Injector No. 3	8W-80-48
Fuel Injector No. 4	8W-80-48
Fuel Injector No. 5 (2.7L)	8W-80-49
Fuel Injector No. 6 (2.7L)	8W-80-49
Fuel Pump Module	8W-80-49
Generator	8W-80-49
Headlamp Leveling Switch (Export)	8W-80-49
Headlamp Washer Pump Motor (JR41 Export)	8W-80-50
Heated Seat Switch	8W-80-50
Horizontal Motor (JR27)	8W-80-50
Horizontal Motor (JR41)	8W-80-50
Horn	8W-80-50
Idle Air Control Motor (2.0L/2.4L)	8W-80-51
Idle Air Control Motor (2.7L)	8W-80-51
Ignition Coil Pack (2.0L/2.4L)	8W-80-51
Ignition Switch C1	8W-80-51
Ignition Switch C2	8W-80-52
Ignition Switch C3	8W-80-52
Inlet Air Temp Sensor	8W-80-52
Input Speed Sensor	8W-80-52
Instrument Cluster	8W-80-53
Junction Block Body Control Module JB	8W-80-53
Junction Block C1	8W-80-54
Junction Block C2	8W-80-54
Junction Block C3	8W-80-54
Junction Block C4	8W-80-54
Junction Block C5	8W-80-55
Junction Block C6	8W-80-55
Junction Block C7	8W-80-55
Junction Block C8	8W-80-56
Junction Block C9	8W-80-56
Junction Block C10	8W-80-56
Junction Block C11 (Export)	8W-80-57
Knock Sensor (2.0L/2.4L)	8W-80-57
Knock Sensor (2.7L)	8W-80-57
Leak Detection Pump (2.7L)	8W-80-57
Left Back-Up Lamp	8W-80-58
Left Curtain Airbag Squib (JR41)	8W-80-58
Left Fog Lamp (JR27)	8W-80-58
Left Fog Lamp (JR41)	8W-80-58
Left Front Door Speaker	8W-80-58
Left Front Instrument Panel Speaker (JR27 Base)	8W-80-59
Left Front Instrument Panel Speaker (JR27 Premium)	8W-80-59
Left Front Instrument Panel Speaker (JR41 Premium)	8W-80-59
Left Front Wheel Speed Sensor	8W-80-59
Left Headlamp (Except Export)	8W-80-59
Left Lavalier Module (Export)	8W-80-60
Left License Lamp (JR27)	8W-80-60
Left License Lamp (JR41 Export)	8W-80-60
Left Park/Turn Signal Lamp	8W-80-60
Left Power Mirror	8W-80-60
Left Rear Door Lock Motor/Ajar Switch (JR41)	8W-80-61

Component	Page
Left Rear Fog Lamp (JR27 Export)	8W-80-61
Left Rear Fog Lamp (JR41 Export)	8W-80-61
Left Rear Power Window Motor	8W-80-61
Left Rear Power Window Switch (JR41)	8W-80-62
Left Rear Speaker	8W-80-62
Left Rear Wheel Speed Sensor	8W-80-62
Left Remote Radio Switch (2.7L)	8W-80-62
Left Side Impact Sensor 1	8W-80-63
Left Speed Control Switch	8W-80-63
Left Tail/Side Marker Lamp	8W-80-63
Left Tail/Stop Lamp	8W-80-63
Left Tail/Turn Signal Lamp (JR41 Dodge)	8W-80-64
Left Turn Lamp (Chrysler/Except JR41 Dodge)	8W-80-64
Left Visor/Vanity Lamps	8W-80-64
License Lamp (JR41 Except Export)	8W-80-64
Manifold Absolute Pressure Sensor (2.0L/2.4L)	8W-80-64
Manifold Absolute Pressure Sensor (2.7L)	8W-80-65
Master Power Window Switch	8W-80-65
Mode Door Actuator	8W-80-66
Multi-Function Switch C1	8W-80-66
Multi-Function Switch C2	8W-80-66
Natural Vacuum Leak Detection Assembly (2.4L Except Export)	8W-80-67
Oil Pressure Switch	8W-80-67
Output Speed Sensor	8W-80-67
Overhead Map/Courtesy Lamps (JR41)	8W-80-67
Oxygen Sensor 1/1 Right Bank Up (2.7L)	8W-80-67
Oxygen Sensor 1/1 Upstream (2.0L/2.4L)	8W-80-68
Oxygen Sensor 1/2 Downstream (2.0L/2.4L)	8W-80-68
Oxygen Sensor 1/2 Right Bank Down (2.7L)	8W-80-68
Oxygen Sensor 2/1 Left Bank Up (2.7L)	8W-80-68
Oxygen Sensor 2/2 Left Bank Down (2.7L)	8W-80-69
Park Lamp Relay (Premium)	8W-80-69
Passenger Airbag	8W-80-69
Passenger Door Lock Motor/Ajar Switch	8W-80-69
Passenger Door Lock Switch	8W-80-70
Passenger Heated Seat Module	8W-80-70
Passenger Power Window Motor (JR27)	8W-80-70
Passenger Power Window Motor (JR41)	8W-80-70
Passenger Power Window Switch	8W-80-71
Passenger Seat Belt Solenoid (JR27)	8W-80-71
Passenger Seat Belt Tensioner (JR27)	8W-80-71
Passenger Seat Belt Tensioner (JR41)	8W-80-71
PCV Heater (2.7L)	8W-80-72
Power Amplifier C1 (JR27 Premium)	8W-80-72
Power Amplifier C1 (JR41 Premium)	8W-80-72
Power Amplifier C2 (JR27 Premium)	8W-80-73
Power Amplifier C2 (JR41 Premium)	8W-80-73
Power Antenna (Export)	8W-80-73
Power Mirror Switch	8W-80-74
Power Outlet (JR27/JR41 Export)	8W-80-74
Power Seat Switch (JR27)	8W-80-74
Power Seat Switch (JR41)	8W-80-75
Power Steering Pressure Switch (2.0L)	8W-80-75
Power Top Pump Motor (JR27)	8W-80-75
Power Top Switch (JR27)	8W-80-75
Power Top Up/Down Relays (JR27)	8W-80-76
Powertrain Control Module C1 (NGC)	8W-80-76
Powertrain Control Module C1 (SBEC)	8W-80-77
Powertrain Control Module C2 (NGC)	8W-80-78
Powertrain Control Module C2 (SBEC)	8W-80-79
Powertrain Control Module C3 (NGC)	8W-80-80
Powertrain Control Module C4 (NGC)	8W-80-81
Radiator Fan	8W-80-82
Radio C1	8W-80-82
Radio C2	8W-80-82
Rear Floor Courtesy Lamp	8W-80-83
Rear Vertical Motor (JR27)	8W-80-83
Rear Vertical Motor (JR41)	8W-80-83
Recirculation Door Actuator	8W-80-83
Recline Motor (JR41)	8W-80-83
Right Back-Up Lamp	8W-80-84
Right Curtain Airbag Squib (JR41)	8W-80-84
Right Fog Lamp (JR27)	8W-80-84
Right Fog Lamp (JR41)	8W-80-84
Right Front Door Speaker	8W-80-84
Right Front Instrument Panel Speaker (JR27 Base)	8W-80-85
Right Front Instrument Panel Speaker (JR27 Premium)	8W-80-85
Right Front Instrument Panel Speaker (JR41 Premium)	8W-80-85
Right Front Wheel Speed Sensor	8W-80-85
Right Headlamp (Except Export)	8W-80-86
Right Lavalier Module (Export)	8W-80-86
Right License Lamp (JR27)	8W-80-86
Right License Lamp (JR41 Export)	8W-80-86
Right Park/Turn Signal Lamp	8W-80-86
Right Power Mirror	8W-80-87
Right Rear Door Lock Motor/Ajar Switch (JR41)	8W-80-87
Right Rear Fog Lamp (JR27 Export)	8W-80-87
Right Rear Fog Lamp (JR41 Export)	8W-80-87
Right Rear Power Window Motor	8W-80-88
Right Rear Power Window Switch (JR41)	8W-80-88
Right Rear Speaker	8W-80-88
Right Rear Wheel Speed Sensor	8W-80-88
Right Remote Radio Switch (2.7L)	8W-80-89
Right Side Impact Sensor 1	8W-80-89

Component	Page
Right Speed Control Switch	8W-80-89
Right Tail/Side Marker Lamp	8W-80-89
Right Tail/Stop Lamp	8W-80-90
Right Tail/Turn Signal Lamp (JR41 Dodge)	8W-80-90
Right Turn Lamp (Chrysler/Except JR41 Dodge)	8W-80-90
Right Visor/Vanity Lamps	8W-80-90
Seat Belt Control Module (JR27 Export)	8W-80-90
Sentry Key Immobilizer Module	8W-80-91
Sun Sensor (ATC)	8W-80-91
Sunroof Control Module (JR41)	8W-80-91
Sunroof Switch (JR41)	8W-80-91
Throttle Position Sensor (2.0L/2.4L)	8W-80-92
Throttle Position Sensor (2.7L)	8W-80-92
Traction Control Switch	8W-80-92
Transmission Control Module (2.7L)	8W-80-93
Transmission Range Indicator Illumination (PRNDL)	8W-80-94
Transmission Range Sensor	8W-80-94
Transmission Solenoid/Pressure Switch Assembly	8W-80-94
Trunk Lamp	8W-80-95
Vehicle Speed Control Servo	8W-80-95
Vehicle Speed Sensor (2.0L MTX)	8W-80-95
Window Drop Relay Assembly (JR27)	8W-80-95

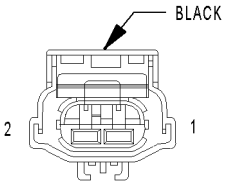

A/C COMPRESSOR CLUTCH

A/C COMPRESSOR CLUTCH - BLACK 2 WAY

CAV	CIRCUIT	FUNCTION
1	C3 14DB/BK	A/C COMPRESSOR CLUTCH RELAY OUTPUT
2	-	-

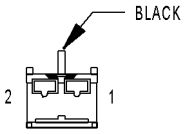

A/C EVAPORATOR TEMPERATURE SENSOR

A/C EVAPORATOR TEMPERATURE SENSOR - BLACK 2 WAY

CAV	CIRCUIT	FUNCTION
1	C12 20LG/BK	EVAPORATOR TEMPERATURE SENSOR SIGNAL
2	C57 20DB/GY	SENSOR GROUND

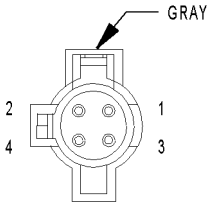

A/C PRESSURE TRANSDUCER

A/C PRESSURE TRANSDUCER - GRAY 4 WAY

CAV	CIRCUIT	FUNCTION
1	K4 20BK/LB	SENSOR GROUND 1
2	K6 20VT/WT	5 VOLT SUPPLY
3	C18 20DB	A/C PRESSURE SIGNAL
4	-	-

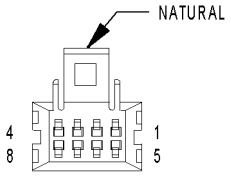

A/C-HEATER CONTROL C1 (MTC)

A/C-HEATER CONTROL C1 (MTC) - NATURAL 8 WAY

CAV	CIRCUIT	FUNCTION
1	C57 20DB/GY	SENSOR GROUND
2	C16 20LB/YL	FUSED REAR WINDOW DEFOGGER RELAY OUTPUT
3	E17 18YL/BK	DAY BRIGHTNESS SENSE
4	E2 20OR	PANEL LAMPS DRIVER
5	C21 20DB/OR	A/C SWITCH SENSE
6	C58 20RD/TN	A/C MODE SWITCH MUX
7	F11 20RD/WT	FUSED IGNITION SWITCH OUTPUT (OFF-RUN-START)
8	C82 20YL/OR	TEMPERATURE SELECT SIGNAL

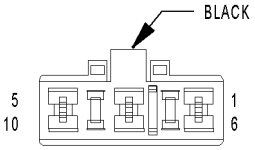

A/C-HEATER CONTROL C2 (MTC)

A/C-HEATER CONTROL C2 (MTC) - BLACK 10 WAY

CAV	CIRCUIT	FUNCTION
1	-	-
2	C4 16TN	LOW BLOWER MOTOR DRIVER
3	C6 14LB	M2 BLOWER MOTOR DRIVER
4	-	-
5	Z119 14BK/GY	GROUND
6	-	-
7	C5 16LG	M1 BLOWER MOTOR DRIVER
8	-	-
9	-	-
10	C7 12BK/TN	BLOWER MOTOR DRIVER

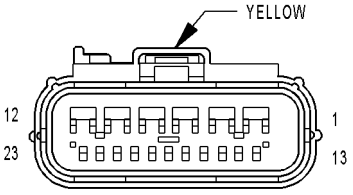

AIRBAG CONTROL MODULE (ORC) (BASE)

AIRBAG CONTROL MODULE (ORC) (BASE) - YELLOW 23 WAY

CAV	CIRCUIT	FUNCTION
1	R56 20LB/DG	PASSENGER SEAT BELT TENSIONER LINE 1
2	R54 20LB/YL	PASSENGER SEAT BELT TENSIONER LINE 2
3	R62 20OR/YL	PASSENGER SQUIB 2 LINE 1
4	R64 20TN/YL	PASSENGER SQUIB 2 LINE 2
5	R42 20BK/YL	PASSENGER SQUIB 1 LINE 1
6	R44 20DG/YL	PASSENGER SQUIB 1 LINE 2
7	R55 20LG/DG	DRIVER SEAT BELT TENSIONER LINE 1
8	R53 20LG/YL	DRIVER SEAT BELT TENSIONER LINE 2
9	R61 20OR/LB	DRIVER SQUIB 2 LINE 1
10	R63 20TN/LB	DRIVER SQUIB 2 LINE 2
11	R43 20BK/LB	DRIVER SQUIB 1 LINE 1
12	R45 20DG/LB	DRIVER SQUIB 1 LINE 2
13	-	-
14	F14 20LG/YL	FUSED IGNITION SWITCH OUTPUT (RUN-START)
15	F23 20DB/YL	FUSED IGNITION SWITCH OUTPUT (RUN)
16	Z100 18BK	GROUND
17	-	-
18	-	-
19	-	-
20	-	-
21	D25 20VT/YL (JR27)	PCI BUS
21	D25 20VT (JR41)	PCI BUS
22	-	-
23	-	-

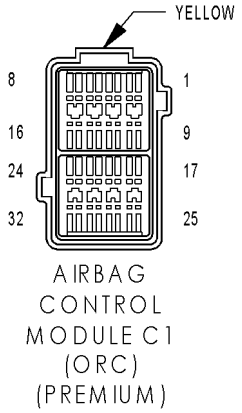

AIRBAG CONTROL MODULE C1 (ORC) (PREMIUM) - YELLOW 32 WAY

CAV	CIRCUIT	FUNCTION
1	R53 18LG/YL	DRIVER SEAT BELT TENSIONER LINE 2
2	R55 18LG/DG	DRIVER SEAT BELT TENSIONER LINE 1
3	R56 18LB/DG	PASSENGER SEAT BELT TENSIONER LINE 1
4	R54 18LB/YL	PASSENGER SEAT BELT TENSIONER LINE 2
5	-	-
6	-	-
7	-	-
8	-	-
9	-	-
10	-	-
11	-	-
12	-	-
13	-	-
14	-	-
15	-	-
16	-	-
17	-	-
18	-	-
19	-	-
20	-	-
21	-	-
22	-	-
23	-	-
24	-	-
25	R77 20LB/BR	LEFT CURTAIN SQUIB 1 LINE 2
26	R75 20LB/OR	LEFT CURTAIN SQUIB 1 LINE 1
27	R74 20LB/YL	RIGHT CURTAIN SQUIB 1 LINE 1
28	R76 20LB/WT	RIGHT CURTAIN SQUIB 1 LINE 2
29	-	-
30	-	-
31	-	-
32	-	-

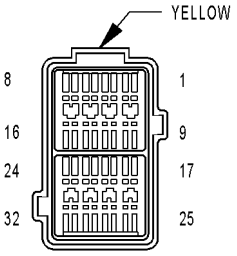

AIRBAG CONTROL MODULE C2 (ORC) (PREMIUM)

AIRBAG CONTROL MODULE C2 (ORC) (PREMIUM) - YELLOW 32 WAY

CAV	CIRCUIT	FUNCTION
1	R45 20DG/LB	DRIVER SQUIB 1 LINE 2
2	R43 20BK/LB	DRIVER SQUIB 1 LINE 1
3	R61 20OR/LB	DRIVER SQUIB 2 LINE 1
4	R63 20TN/LB	DRIVER SQUIB 2 LINE 2
5	R44 20DG/YL	PASSENGER SQUIB 1 LINE 2
6	R42 20BK/YL	PASSENGER SQUIB 1 LINE 1
7	R62 20OR/YL	PASSENGER SQUIB 2 LINE 1
8	R64 20TN/YL	PASSENGER SQUIB 2 LINE 2
9	-	-
10	-	-
11	-	-
12	R16 20BR/LG	RIGHT SIDE IMPACT SENSOR 1 GROUND
13	-	-
14	-	-
15	D25 20VT/YL (JR27)	PCI BUS
15	D25 20VT (JR41)	PCI BUS
16	F14 20LG/YL	FUSED IGNITION SWITCH OUTPUT (RUN-START)
17	-	-
18	-	-
19	-	-
20	R15 20LG/BR	LEFT SIDE IMPACT SENSOR 1 GROUND
21	-	-
22	Z100 20BK	GROUND
23	-	-
24	F23 20DB/YL	FUSED IGNITION SWITCH OUTPUT (RUN)
25	R13 20LG/TN	LEFT SIDE IMPACT SENSOR 1 SIGNAL
26	R14 20TN/LG	RIGHT SIDE IMPACT SENSOR 1 SIGNAL
27	-	-
28	-	-
29	-	-
30	-	-
31	-	-
32	-	-

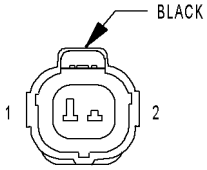

AMBIENT TEMP SENSOR

AMBIENT TEMP SENSOR - BLACK 2 WAY

CAV	CIRCUIT	FUNCTION
1	K25 18VT/LG (2.0L/2.4L)	AAT SIGNAL
1	K25 18VT/LG (2.7L)	AMBIENT TEMPERATURE SENSOR SIGNAL
2	K4 18BK/LB	SENSOR GROUND 1

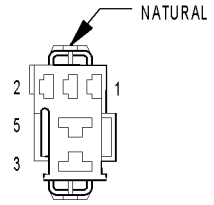

AUTO HEADLAMP RELAY (PREMIUM)

AUTO HEADLAMP RELAY (PREMIUM) - NATURAL 5 WAY

CAV	CIRCUIT	FUNCTION
1	L109 20WT	FUSED IGNITION SWITCH OUTPUT
2	L124 20WT/DB	AUTO HEADLAMP RELAY CONTROL
3	A3 16RD/WT	FUSED B(+)
4	-	-
5	L309 20WT/OR	AUTO HEADLAMP RELAY OUTPUT

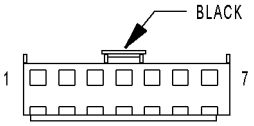

AUTOMATIC DAY/NIGHT MIRROR

AUTOMATIC DAY/NIGHT MIRROR - BLACK 7 WAY

CAV	CIRCUIT	FUNCTION
1	F20 20BK/WT	FUSED IGNITION SWITCH OUTPUT (RUN)
2	Z312 18BK	GROUND
3	L1 18BK/VT (JR27)	BACK-UP LAMP FEED
3	L1 20BK/VT (JR41)	BACK-UP LAMP FEED
4	-	-
5	-	-
6	M2 18BK/YL (JR27)	COURTESY LAMPS DRIVER
7	M1 18BK/RD (JR27)	FUSED B(+)

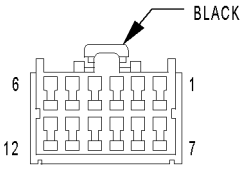

AUTOMATIC TEMPERATURE CONTROL HEAD

AUTOMATIC TEMPERATURE CONTROL HEAD - BLACK 12 WAY

CAV	CIRCUIT	FUNCTION
1	Z116 20BK	GROUND
2	D25 20VT/LG	PCI BUS
3	Z117 20BK	GROUND
4	E2 20OR	PANEL LAMPS DRIVER
5	-	-
6	-	-
7	C10 20RD/TN	IN-CAR TEMPERATURE SENSOR SIGNAL
8	C57 20DB/GY	SENSOR GROUND
9	-	-
10	F20 20WT/YL	FUSED IGNITION SWITCH OUTPUT (RUN)
11	C9 20RD/TN (JR27)	ASPIRATOR MOTOR DRIVER
11	C9 20YL/DG (JR41)	ASPIRATOR MOTOR DRIVER
12	M1 20PK	FUSED B(+)

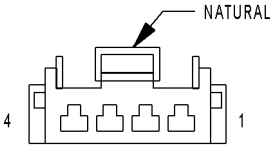

AUTOSTICK SWITCH

AUTOSTICK SWITCH - NATURAL 4 WAY

CAV	CIRCUIT	FUNCTION
1	T44 20YL (2.0L/2.4L JR27)	AUTOSTICK DOWNSHIFT SWITCH SIGNAL
1	T44 20YL/LB (2.0L/2.4L JR41)	AUTOSTICK DOWNSHIFT SWITCH SIGNAL
1	T44 20YL (2.7L JR27)	AUTOSTICK DOWNSHIFT SWITCH SENSE
1	T44 20YL/LB (2.7L JR41)	AUTOSTICK DOWNSHIFT SWITCH SENSE
2	T5 20LG (2.0L/2.4L JR27)	AUTOSTICK UPSHIFT SWITCH SIGNAL
2	T5 20LG/LB (2.0L/2.4L JR41)	AUTOSTICK UPSHIFT SWITCH SIGNAL
2	T5 20LG (2.7L JR27)	AUTOSTICK UPSHIFT SWITCH SENSE
2	T5 20LG/LB (2.7L JR41)	AUTOSTICK UPSHIFT SWITCH SENSE
3	Z191 20BK	GROUND
4	F11 20RD/WT	FUSED IGNITION SWITCH OUTPUT (OFF-RUN-START)

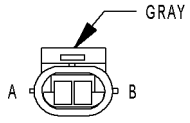

BACK-UP LAMP SWITCH (2.0L MTX)

BACK-UP LAMP SWITCH (2.0L MTX) - GRAY 2 WAY

CAV	CIRCUIT	FUNCTION
A	F20 18WT	FUSED IGNITION SWITCH OUTPUT (RUN)
B	L1 18VT/BK	BACK-UP LAMP FEED

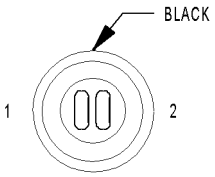

BACK-UP LAMP SWITCH (2.7L MTX)

BACK-UP LAMP SWITCH (2.7L MTX) - BLACK 2 WAY

CAV	CIRCUIT	FUNCTION
1	F20 18WT	FUSED IGNITION SWITCH OUTPUT (RUN)
2	L1 18VT/BK	BACK-UP LAMP FEED

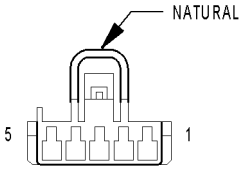

BLEND DOOR ACTUATOR

BLEND DOOR ACTUATOR - NATURAL 5 WAY

CAV	CIRCUIT	FUNCTION
1	C33 20DB/RD	BLEND AIR DOOR DRIVER
2	C57 20DB/GY	SENSOR GROUND
3	C36 20RD/WT	BLEND DOOR FEEDBACK SIGNAL
4	C26 20PK/DB	5V SUPPLY
5	C34 20DB/WT	COMMON DOOR DRIVER

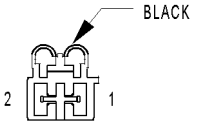

BLOWER MOTOR

BLOWER MOTOR - BLACK 2 WAY

CAV	CIRCUIT	FUNCTION
1	C72 12GY (ATC)	BLOWER MOTOR SUPPLY
1	C7 12BK (MTC)	BLOWER MOTOR DRIVER
2	C71 12DB (ATC)	BLOWER MOTOR GROUND
2	C1 12DG (MTC)	FUSED IGNITION SWITCH OUTPUT (RUN)

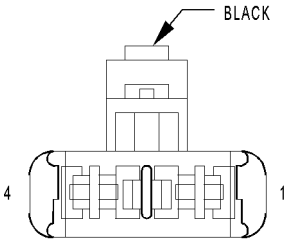

BLOWER MOTOR POWER MODULE C1 (ATC)

BLOWER MOTOR POWER MODULE C1 (ATC) - BLACK 4 WAY

CAV	CIRCUIT	FUNCTION
1	C1 12DG	FUSED IGNITION SWITCH OUTPUT (RUN)
2	C56 20RD/LG	BLOWER MOTOR CONTROL
3	C7 20BK/TN	BLOWER SPEED SENSE
4	Z118 12BK	GROUND

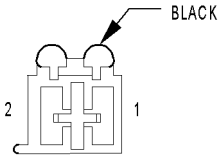

BLOWER MOTOR POWER MODULE C2 (ATC)

BLOWER MOTOR POWER MODULE C2 (ATC) - BLACK 2 WAY

CAV	CIRCUIT	FUNCTION
1	C72 12GY	BLOWER MOTOR SUPPLY
2	C71 12DB	BLOWER MOTOR GROUND

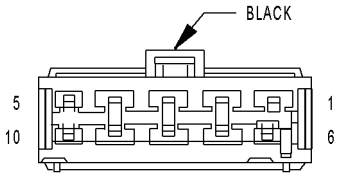

BLOWER MOTOR RESISTOR BLOCK (MTC)

BLOWER MOTOR RESISTOR BLOCK (MTC) - BLACK 10 WAY

CAV	CIRCUIT	FUNCTION
1	C7 12BK	BLOWER MOTOR DRIVER
2	C7 12BK/TN	HIGH BLOWER MOTOR DRIVER
3	C6 16LB	M2 BLOWER MOTOR DRIVER
4	C5 14LG	M1 BLOWER MOTOR DRIVER
5	C4 14TN	LOW BLOWER MOTOR DRIVER
6	-	-
7	-	-
8	-	-
9	-	-
10	-	-

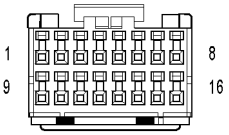

BODY CONTROL MODULE C1

BODY CONTROL MODULE C1 - 16 WAY

CAV	CIRCUIT	FUNCTION
1	E19 20RD	PANEL LAMPS DIMMER SIGNAL
2	X3 20BK/RD	HORN/RADIO CONTROL MUX
3	G69 20BK/OR	VTSS INDICATOR DRIVER
4	G26 20LB	KEY-IN IGNITION SWITCH SENSE
5	L177 20WT/OR (PREMIUM)	PARK LAMP RELAY CONTROL
6	P58 20WT (EXPORT)	RKE EXTERNAL ANTENNA
7	P158 20BK (EXPORT)	RKE EXTERNAL ANTENNA
8	C10 20RD/TN (ATC)	IN-CAR TEMPERATURE SENSOR SIGNAL
9	C38 20DB (ATC)	SUN SENSOR SIGNAL
10	D6 20PK/LB (2.0L/2.4L EATX)	SCI RECEIVE (TCM)
10	D6 20PK/LB (2.7L EATX)	SCI RECEIVE
11	C56 20RD/LG (ATC)	BLOWER MOTOR CONTROL
12	A31 18BK/LB	FUSED IGNITION SWITCH OUTPUT (RUN-ACC)
13	Z380 18BK/DG (EXCEPT BASE)	GROUND
14	E17 18YL/BK (EXCEPT EXPORT)	DAY BRIGHTNESS SENSE
15	L124 20WT/DB (PREMIUM)	AUTO HEADLAMP RELAY CONTROL
16	C9 20RD/TN (JR27 PREMIUM)	ASPIRATOR MOTOR DRIVER
16	C9 20YL/DG (JR41 PREMIUM)	ASPIRATOR MOTOR DRIVER

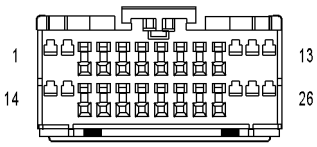

BODY CONTROL MODULE C2

BODY CONTROL MODULE C2 - 26 WAY

CAV	CIRCUIT	FUNCTION
1	C26 20PK/DB	5VOLT SUPPLY
2	Z132 16BK/GY (BASE)	GROUND
2	Z999 16BK/GY (PREMIUM)	GROUND
3	P1 20BK/WT	DECKLID RELEASE SWITCH SENSE
4	V52 20DG/RD	FRONT WIPER SWITCH MUX
5	C7 18BK/TN (ATC)	BLOWER SPEED SENSE
5	C7 12BK/TN (MTC)	BLOWER MOTOR DRIVER
6	C21 20DB/OR (BASE)	A/C SWITCH SENSE
7	C37 20YL	MODE DOOR FEEDBACK SIGNAL
8	C36 18RD/WT	BLEND DOOR FEEDBACK SIGNAL
9	C12 20LG/BK	EVAPORATOR TEMPERATURE SENSOR SIGNAL
10	C57 20DB/GY	SENSOR GROUND
11	E2 18OR/BR	PANEL LAMPS DRIVER
12	E2 20OR	PANEL LAMPS DRIVER
13	-	-
14	C82 20YL/OR (BASE)	TEMPERATURE SELECT SIGNAL
15	C34 20DB/WT	COMMON DOOR DRIVER
16	D25 20VT/YL	PCI BUS (RADIO)
17	D25 20VT/YL (JR27)	PCI BUS (AIRBAG)
17	D25 20VT (JR41)	PCI BUS (AIRBAG)
18	D25 20VT/PK (EXCEPT JR41 BASE)	PCI BUS (SKIM)
19	D25 20VT/OR	PCI BUS (MIC)
20	D25 20VT/YL	PCI BUS (DLC)
21	D25 20VT/LG (JR27)	PCI BUS (ATC)
21	D25 18VT/LG (JR41)	PCI BUS (ATC)
22	E2 20OR	PANEL LAMPS DRIVER
23	C58 20RD/TN (BASE/EXPORT)	A/C MODE SWITCH MUX
23	L109 20WT (PREMIUM)	FUSED IGNITION SWITCH OUTPUT
24	C32 20GY/DB	RECIRCULATION DOOR DRIVER
25	C33 20DB/RD	BLEND AIR DOOR DRIVER
26	C35 20DG/YL	MODE DOOR DRIVER

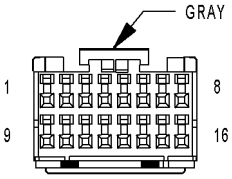

BODY CONTROL MODULE C3

BODY CONTROL MODULE C3 - GRAY 16 WAY

CAV	CIRCUIT	FUNCTION
1	D25 20OR (2.0L/2.4L)	PCI BUS (PCM)
1	D25 20OR (2.7L)	PCI BUS
2	D25 18YL/VT	PCI BUS (ABS)
3	D25 20VT/YL (2.0L/2.4L EATX)	PCI BUS (PCM)
3	D25 20VT/YL (2.7L EATX)	PCI BUS
4	V55 20TN/RD	FRONT WIPER PARK SWITCH SENSE
5	V14 20RD/VT	FRONT WIPER ON/OFF RELAY CONTROL
6	V16 20VT/PK	FRONT WIPER HIGH/LOW RELAY CONTROL
7	-	-
8	-	-
9	V58 18BR/YL (HEADLAMP WASHER)	HEADLAMP WASHER RELAY CONTROL
10	V10 18BR	FRONT WASHER PUMP MOTOR CONTROL
11	-	-
12	-	-
13	Z132 18BK	GROUND
14	-	-
15	-	-
16	P340 18LG/YL (HEATED SEAT)	HEATED SEAT RELAY CONTROL

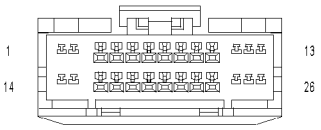

BODY CONTROL MODULE C4

BODY CONTROL MODULE C4 - 26 WAY

CAV	CIRCUIT	FUNCTION
1	P2 20BK/WT	DECKLID RELEASE SOLENOID DRIVER
2	Q37 20OR/WT (JR27)	WINDOW DROP RELAY CONTROL
3	-	-
4	G73 20LG/OR (VTSS)	DRIVER CYLINDER LOCK SWITCH MUX
5	G75 20TN	DRIVER DOOR AJAR SWITCH SENSE
6	G74 20TN/RD	PASSENGER DOOR AJAR SWITCH SENSE
7	G77 20TN/OR (JR41)	LEFT REAR DOOR AJAR SWITCH SENSE
8	G76 20TN/YL (JR41)	RIGHT REAR DOOR AJAR SWITCH SENSE
9	P175 20OR/BK	DRIVER LOCK RELAY OUTPUT
10	P179 20OR/BR (JR41)	LEFT REAR LOCK RELAY OUTPUT
11	P180 20OR/TN (JR41)	RIGHT REAR LOCK RELAY OUTPUT
12	P176 20PK/BK	PASSENGER LOCK RELAY OUTPUT
13	P177 20DB/WT	DRIVER UNLOCK RELAY OUTPUT
14	G38 18GY (JR27)	GARAGE DOOR OPENER ENABLE
15	P97 20WT/DG	DRIVER DOOR SWITCH MUX
16	P96 20WT/LG	PASSENGER DOOR SWITCH MUX
17	Q31 20WT/BK (JR27)	CONVERTIBLE TOP SWITCH MUX
18	G78 18TN/BK	DECKLID AJAR SWITCH SENSE
19	E2 20OR	PANEL LAMPS DRIVER
20	P6 20RD/WT (JR27)	TOP UP RELAY CONTROL
21	G71 20VT/YL (VTSS)	DECKLID SECURITY SWITCH SENSE
22	G4 20DB	FUEL LEVEL SENSOR SIGNAL
23	P5 20 YL/BK (JR27)	TOP DOWN RELAY CONTROL
24	P182 20PK/DB (JR41)	RIGHT REAR UNLOCK RELAY OUTPUT
25	P178 20PK/LB	PASSENGER UNLOCK RELAY OUTPUT
26	P181 20PK/BK (JR41)	LEFT REAR UNLOCK RELAY OUTPUT

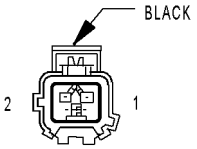

BRAKE FLUID LEVEL SWITCH

BRAKE FLUID LEVEL SWITCH - BLACK 2 WAY

CAV	CIRCUIT	FUNCTION
1	G9 20GY/BK	BRAKE WARNING INDICATOR DRIVER
2	Z231 20BK	GROUND

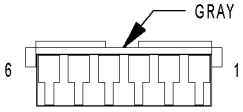

BRAKE LAMP SWITCH

BRAKE LAMP SWITCH - GRAY 6 WAY

CAV	CIRCUIT	FUNCTION
1	K29 20WT/PK (2.0L/2.4L)	BRAKE SWITCH SIGNAL
1	K29 20WT/PK (2.7L)	BRAKE SWITCH SENSE
2	Z241 20BK (2.7L MTX)	GROUND
2	Z241 20BK/LG (EXCEPT 2.7L MTX)	GROUND
3	V32 20YL/RD (2.0L/2.4L)	S/C SUPPLY
3	V32 20YL/RD (2.7L)	SPEED CONTROL POWER SUPPLY
4	V30 20DB/RD	SPEED CONTROL BRAKE SWITCH OUTPUT
5	L50 16WT/TN	BRAKE LAMP SWITCH OUTPUT
6	A7 18RD/BK	FUSED B(+)

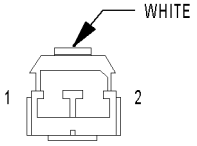

BRAKE TRANSMISSION SHIFT INTERLOCK SOLENOID

BRAKE TRANSMISSION SHIFT INTERLOCK SOLENOID - WHITE 2 WAY

CAV	CIRCUIT	FUNCTION
1	K29 20WT/PK (2.0L/2.4L)	BRAKE SWITCH SIGNAL
1	K29 20WT/PK (2.7L)	BRAKE SWITCH SENSE
2	F20 20WT/YL	FUSED IGNITION SWITCH OUTPUT (RUN)

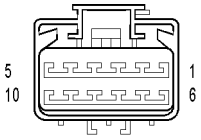

C100

C100 - (INSTRUMENT PANEL SIDE)

CAV	CIRCUIT
1	A15 16PK (BASE/EXPORT)
1	A15 16PK/LB (PREMIUM)
2	A51 20RD/WT
2	A51 20RD/WT (SKIM)
3	D6 20PK/LB (EATX)
3	D6 20PK/LB (EATX)
4	D20 20LG
5	D21 20PK
6	G6 20GY
7	-
8	K29 20WT/PK (EATX)
9	L101 18RD (EXPORT)
10	-

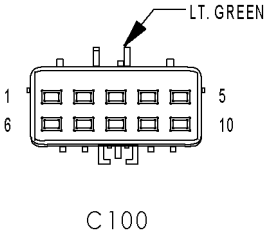

C100 - LT. GREEN (HEADLAMP AND DASH SIDE)

CAV	CIRCUIT
1	A15 16PK
2	A51 20RD/WT
3	D6 20PK/LB (EATX)
4	D20 20LG
5	D21 20PK
5	D21 20PK (2.7L EATX)
6	G6 18GY
7	-
8	K29 20WT/PK (EATX)
8	K29 20WT/PK (EATX)
9	L101 18RD (EXPORT)
9	L101 18RD (EXPORT)
10	-

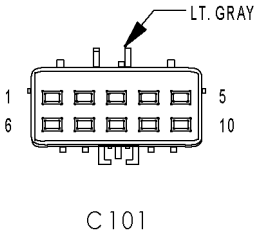

C101 - LT. GRAY (HEADLAMP AND DASH SIDE)

CAV	CIRCUIT
1	A1 18RD
2	F12 18DB/WT
3	A41 16YL
3	A41 16YL (EATX)
4	A2 12PK/BK
5	F20 18WT/YL
6	F30 16RD
7	V10 18BR
7	V10 18BR
8	V37 20PK/LG
9	L36 18LG (JR27 EXPORT)
10	D15 20WT/DG (2.0L/2.4L)

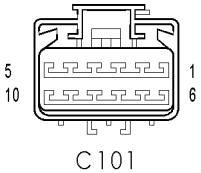

C101 - (INSTRUMENT PANEL SIDE)

CAV	CIRCUIT
1	A1 18RD
2	F12 20DB/WT (EXCEPT JR41 BASE)
3	A41 18YL
4	A2 12PK/BK
5	F20 20WT/YL
5	F20 20WT (EXCEPT ATC)
6	F30 16RD
6	F30 18RD
7	V10 18BR
8	V37 20RD/LG
9	L36 18LG (JR27 EXPORT)
10	D15 20WT/DG

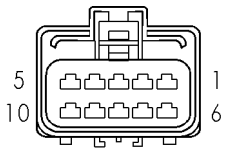

C104
(EATX)

C104 (EATX) - (HEADLAMP AND DASH SIDE)

CAV	CIRCUIT
1	T9 20OR/BK
2	T54 20VT/YL
3	T41 20BK/WT
4	-
5	T16 20RD
6	T19 20WT
7	T41 20BK/LB
8	T50 20DG
9	T59 20PK
10	T60 20BR

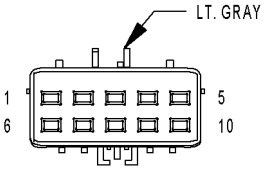

C104
(EATX)

C104 (EATX) - LT. GRAY (AUTOMATIC TRANS-MISSION SIDE)

CAV	CIRCUIT
1	T9 18OR/BK
2	T54 18VT/YL
3	T41 20BK/WT
4	-
5	T16 16RD
6	T19 18WT
7	T41 20BK/LB
8	T50 18DG
9	T59 18PK
10	T60 18BR

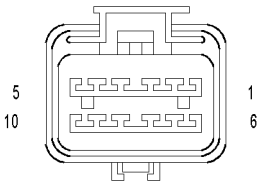

C105
(EATX)

C105 (EATX) - (HEADLAMP AND DASH SIDE)

CAV	CIRCUIT
1	F20 18WT
2	T1 20LG/BK
3	T3 18VT (2.0L/2.4L EXPORT)
3	T3 20VT (EXCEPT 2.0L/2.4L EXPORT)
4	T13 20DB/BK
5	T14 20LG/WT
6	T20 20LB
7	T42 20VT/WT
8	T47 20YL/BK
9	T52 20RD/BK
10	L1 18VT/BK

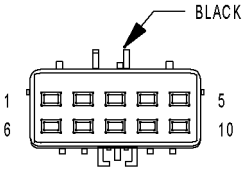

C105
(EATX)

C105 (EATX) - BLACK (AUTOMATIC TRANSMISSION SIDE)

CAV	CIRCUIT
1	F20 18WT
2	T1 20LG/BK
3	T3 18VT
4	T13 18DB/BK
5	T14 18LG/WT
6	T20 18LB
7	T42 20VT/WT
8	T47 18YL/BK
9	T52 18RD/BK
10	L1 18VT/BK

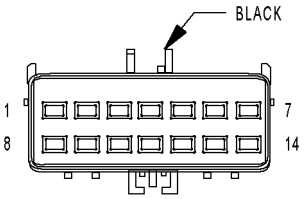

C111

C111 - BLACK (ENGINE HARNESS SIDE)

CAV	CIRCUIT
1	Z1 20BK
2	C3 14DB/BK (2.0L/2.4L)
2	K39 20GY/RD (2.7L)
3	K904 18DB/DG (2.0L/2.4L)
3	K40 20BR/WT (2.7L)
4	K59 20VT/BK (2.7L)
5	T40 16BR (2.0L/2.4L)
5	K7 20OR (2.7L)
6	A142 14DG/OR
7	K60 20YL/BK (2.7L)
8	G6 20GY
9	C18 20DB (2.0L/2.4L)
9	K6 20VT/WT (2.7L)
10	K4 20BKL/LB (2.7L)
11	K10 20DB/LG (2.0L)
11	F142 18OR/DG (2.7L)
12	-
13	F42 18DG/LG (2.7L)
14	Z88 16BK/LG (2.7L)

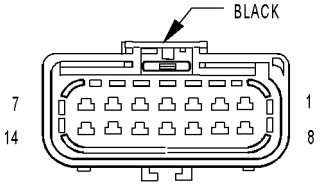

C111

C111 - BLACK (HEADLAMP AND DASH SIDE)

CAV	CIRCUIT
1	Z186 20BK
2	C3 14DB/BK (2.0L/2.4L)
2	K39 20GY/RD (2.7L)
3	K904 18DB/DG (2.0L/2.4L)
3	K40 20BR/WT (2.7L)
4	K59 20VT/BK (2.7L)
5	T40 16BR (2.0L/2.4L)
5	K7 18OR/WT (2.7L)
6	A142 14DG/OR
7	K60 20YL/BK (2.7L)
8	G6 18GY
9	C18 20DB (2.0L/2.4L)
9	K6 18VT/WT (2.7L)
10	K4 18BK/LB (2.7L)
11	K10 18DB/LG (2.0L)
11	F142 16OR/DG (2.7L)
12	-
13	F42 16DG/LG (2.7L)
14	Z88 16BK/LG (2.7L)

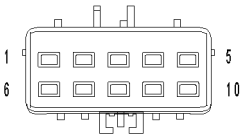

C113
(2.7L)

C113 (2.7L) - (ENGINE HARNESS SIDE)

CAV	CIRCUIT
1	C3 14DB/BK
2	K90 20TN
3	K141 20TN/WT
4	K341 20PK/WT
5	T40 12BR
6	F12 18DB/WT
7	C18 20DB
8	V32 20YL/RD
9	K22 20OR/DB
10	Z108 16BK/TN

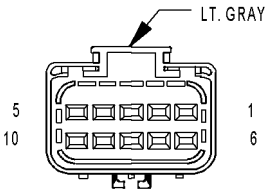

C113
(2.7L)

C113 (2.7L) - LT. GRAY (HEADLAMP AND DASH SIDE)

CAV	CIRCUIT
1	C3 14DB/BK
2	K90 20TN
3	K141 20TN/WT
4	K341 20PK/WT
5	T40 16BR
6	F12 18DB/WT
7	C18 20DB
8	V32 20YL/RD
9	K22 20OR/DB (EATX)
10	Z108 14BK/TN

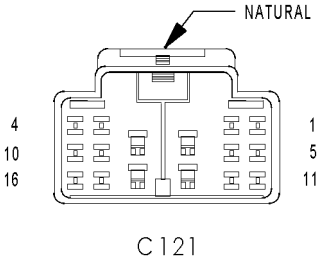

C121 - NATURAL (HEADLAMP AND DASH SIDE)

CAV	CIRCUIT
1	K106 20WT/DG
2	K107 20OR
3	L95 18DG/YL (JR27 EXPORT)
4	A45 18BR (JR27)
5	B1 18YL/DB (ABS)
6	B2 20YL (ABS)
7	P86 16PK/BK (HEATED SEAT)
8	A25 12DB (JR27)
9	-
10	T44 20YL (AUTOSTICK)
11	T5 20LG (AUTOSTICK)
12	Z2 20BK/TN (JR27/JR41 EXPORT)
12	Z2 18DB/WT (JR41 EXCEPT EXPORT)
13	A141 14DG/WT
14	L1 18VT/BK
15	B3 20LG/DB (ABS)
16	B4 20LG (ABS)

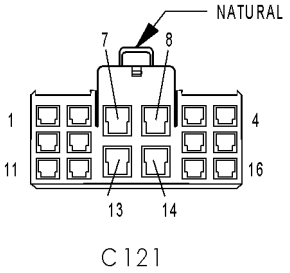

C121 - NATURAL (UNIBODY SIDE)

CAV	CIRCUIT
1	K106 20WT/DG
2	K107 20OR
3	L95 18DG/YL (JR27 EXPORT)
4	A45 18BR (JR27 EXPORT)
5	B1 20YL/DB (ABS)
6	B2 20YL (ABS)
7	P86 16PK/BK (HEATED SEAT)
8	A25 12DB (JR27)
9	-
10	T44 20YL (JR27 AUTOSTICK)
10	T44 20YL/LB (JR41 AUTOSTICK)
11	T5 20LG (JR27 AUTOSTICK)
11	T5 20LG/LB (JR41 AUTOSTICK)
12	F12 20DB/WT
13	A141 16DG/WT
14	L1 20VT/BK
14	L1 20VT/BK
15	B3 20LG/DB (ABS)
16	B4 20LG (ABS)

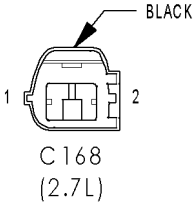

C168 (2.7L) - BLACK (ENGINE HARNESS SIDE)

CAV	CIRCUIT
1	K4 20BK/LB
2	K42 18DB/LG

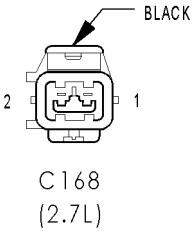

C168 (2.7L) - BLACK (KNOCK SENSOR JUMPER SIDE)

CAV	CIRCUIT
1	K4 20BK/LB
2	K42 18BK/VT

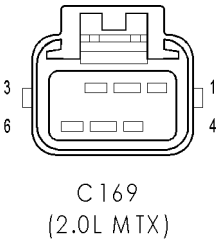

C169 (2.0L MTX) - (HEADLAMP AND DASH SIDE)

CAV	CIRCUIT
1	K7 18OR
2	K4 18BK/LB
3	G7 18WT/OR
4	F20 18WT
5	L1 18VT/BK
6	-

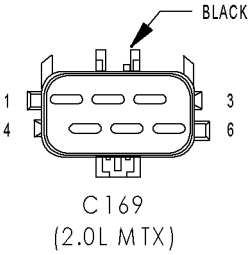

C169 (2.0L MTX) - BLACK (MTX HARNESS SIDE)

CAV	CIRCUIT
1	K7 18OR/WT
2	K4 20BK/LB
3	G7 18WT/OR
4	F20 18WT
5	L1 18VT/BK
6	-

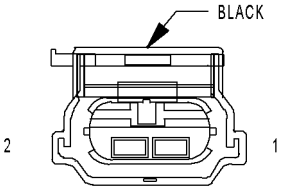

C169
(2.7L MTX)

C169 (2.7L MTX) - BLACK (HEADLAMP AND DASH SIDE)

CAV	CIRCUIT
1	F20 18WT
2	L1 18VT/BK

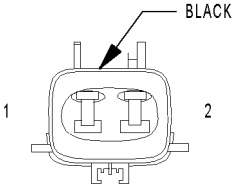

C169
(2.7L MTX)

C169 (2.7L MTX) - BLACK (MTX HARNESS SIDE)

CAV	CIRCUIT
1	F20 18WT
2	L1 18VT/BK

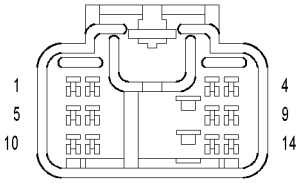

C200
(ATC)

C200 (ATC) - (HVAC SIDE)

CAV	CIRCUIT
1	C34 20DB/WT
2	C35 20DG/YL
3	C33 20DB/RD
4	C32 20GY/DB
5	C57 20DB/GY
6	C26 20PK/DB
7	C1 12DG
8	C7 20BK/TN
9	C12 20LG/BK
10	C36 20RD/WT
11	C37 20YL
12	Z118 12BK
13	C56 20RD/LG
14	-

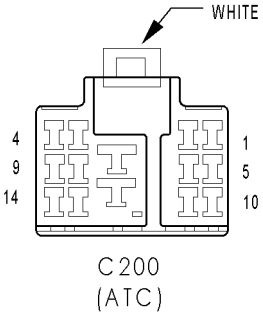

C200 (ATC) - WHITE (INSTRUMENT PANEL SIDE)

CAV	CIRCUIT
1	C34 20DB/WT
2	C35 20DG/YL
3	C33 20DB/RD
4	C32 20GY/DB
5	C57 20DB/YL
6	C26 20PK/DB
7	C1 14DG
8	C7 18BK/TN
9	C12 20LG/BK
10	C36 18RD/WT
11	C37 20YL
12	Z118 12BK
13	C56 20RD/LG
14	-

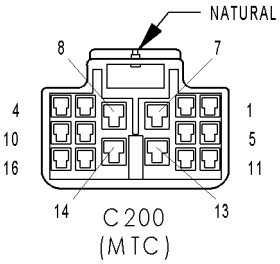

C200 (MTC) - NATURAL (HVAC SIDE)

CAV	CIRCUIT
1	C34 20DB/WT
2	C35 20DG/YL
3	C33 20DB/RD
4	C4 14TN
5	C57 20DB/GY
6	C26 20PK/DB
7	C7 12BK/TN
8	C1 12DG
9	C12 20LG/BK
10	C36 20RD/WT
11	C37 20YL
12	C5 14LG
13	-
14	-
15	C6 16LB
16	C32 20GY/DB

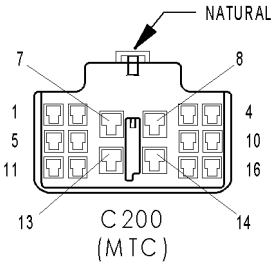

C200 (MTC) - NATURAL (INSTRUMENT PANEL SIDE)

CAV	CIRCUIT
1	C34 20DB/WT
2	C35 20DG/YL
3	C33 20DB/RD
4	C4 16TN
5	C57 20DB/YL
6	C26 20PK/DB
7	C7 14BK/TN
8	C1 14DG
9	C12 20LG/BK
10	C36 18RD/WT
11	C37 20YL
12	C5 16LG
13	-
14	-
15	C6 14LB
16	C32 20GY/DB

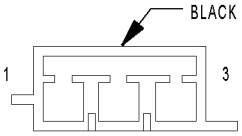

C225

C225 - BLACK (JUMPER SIDE)

CAV	CIRCUIT
1	P86 16PK/BK
2	F11 20RD/WT
3	Z260 16BK

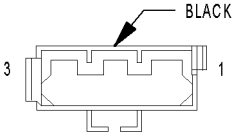

C225

C225 - BLACK (UNIBODY SIDE)

CAV	CIRCUIT
1	P86 16PK/BK
2	F11 20RD/WT
2	F11 20RD/WT
3	Z260 20BK

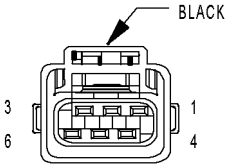

C300
(JR27/JR41 EXPORT)

C300 (JR27/JR41 EXPORT) - BLACK (UNIBODY SIDE)

CAV	CIRCUIT
1	L1 20VT/BK
1	L1 20VT/BK
2	L50 18WT/TN
2	L50 18WT/TN
3	L61 20LG (JR27)
3	L61 20LG/TN (JR41)
4	L7 20BK/YL
4	L7 20BK/YL
5	Z150 18BK
5	Z151 18BK (JR27)
5	Z143 18BK (JR41)
6	L95 18DG/YL (JR27 EXPORT)
6	L36 18LG (JR41)

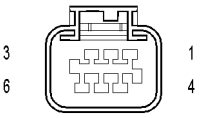

C300
(JR41
EXCEPT EXPORT)

C300 (JR41 EXCEPT EXPORT) - (UNIBODY SIDE)

CAV	CIRCUIT
1	L1 20VT/BK
1	L1 20VT/BK
2	L50 18WT/TN
2	L50 18WT/TN
3	L61 20LG/TN
4	L7 20BK/YL
4	L7 20BK/YL
5	Z143 18BK
5	Z150 18BK
6	-

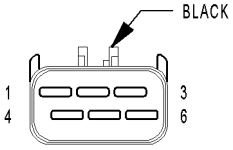

C300

C300 - BLACK (LEFT REAR LAMP SIDE)

CAV	CIRCUIT
1	L1 18VT/BK
2	L50 18WT/TN
3	L61 18LG
4	L7 18BK/YL
5	Z149 18BK (JR27)
5	Z150 18BK (JR41)
6	L36 18LB (EXPORT)

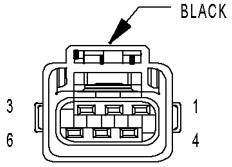

C301
(JR27/JR41 EXPORT)

C301 (JR27/JR41 EXPORT) - BLACK (UNIBODY SIDE)

CAV	CIRCUIT
1	L1 20VT/BK
2	L50 18WT/TN
3	L60 20TN
4	L7 20BK/YL
5	Z151 18BK
6	-

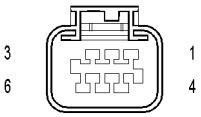

C301
(JR41
EXCEPT EXPORT)

C301 (JR41 EXCEPT EXPORT) - (UNIBODY SIDE)

CAV	CIRCUIT
1	L1 20VT/BK
2	L50 18WT/TN
3	L60 20TN
4	L7 20BK/YL
5	Z151 18BK
6	-

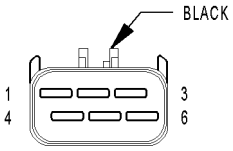

C301

C301 - BLACK (RIGHT REAR LAMP SIDE)

CAV	CIRCUIT
1	L1 18VT/BK
2	L50 18WT/TN
3	L60 18LG (CHRYSLER EXPORT)
3	L60 18TN (DODGE)
3	L60 18LG (JR27)
4	L7 18BK/YL
5	Z151 18BK
6	-

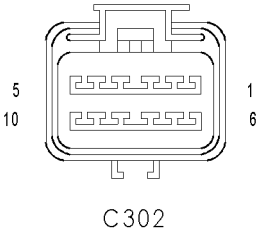

C302 - (INSTRUMENT PANEL SIDE)

CAV	CIRCUIT
1	F30 18RD
2	G9 20GY/BK
3	G73 20LG/OR (VTSS)
4	L36 18LG (REAR FOG LAMPS)
5	-
6	P97 20WT/DG
7	P175 20OR/BK
8	P177 20DB/WT
9	Q1 14YL/WT (JR41)
10	Q1 14YL/TN (JR41)

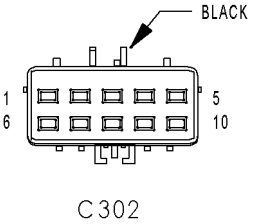

C302 - BLACK (UNIBODY SIDE)

CAV	CIRCUIT
1	F30 18RD (EXCEPT JR41 BASE)
2	G9 18GY/BK
3	G73 20LG/OR (VTSS)
4	L36 18LG (REAR FOG LAMPS)
5	-
6	P97 20WT/DG
7	P175 20OR/BK
8	P177 20DB/WT
9	Q1 14YL/WT (JR41)
10	Q1 14YL/TN (JR41)

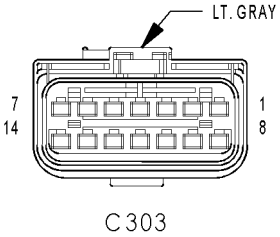

C303 - LT. GRAY (INSTRUMENT PANEL SIDE)

CAV	CIRCUIT
1	F11 20RD/WT
2	F13 18DB (JR27)
2	G75 20TN (JR41)
3	-
4	P96 20WT/LG
5	P176 20OR/WT (JR27)
5	P176 20PK/BK (JR41)
6	P178 20PK/LB
7	Q13 14DB (JR27)
7	Q17 14DB/WT (JR41)
8	Q14 14GY (JR27)
8	Q18 14GY/BK (JR41)
9	Q23 14RD/WT (JR27)
9	Q27 14RD/BK (JR41)
10	Q24 14DG (JR27)
10	Q28 14DG/WT (JR41)
11	Q37 20OR/WT (JR27)
11	G74 20TN/RD (JR41)
12	G74 20TN (JR27)
12	F14 18LG/YL (JR41)
13	G10 20LG/RD (JR41 EXCEPT EXPORT)
14	G75 20TN/RD (JR27)
14	D25 20VT/LG (JR41)

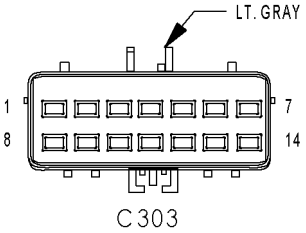

C303 - LT. GRAY (UNIBODY SIDE)

CAV	CIRCUIT
1	F11 20RD/WT (AUTOSTICK)
2	F13 18DB (JR27 EXPORT)
2	G75 20TN (JR41)
3	-
4	P96 20WT/LG
5	P176 20PK/BK
6	P178 20PK/LB
7	Q13 14DB (JR27)
7	Q17 14DB/WT (JR41)
8	Q14 14GY (JR27)
8	Q18 14GY/BK (JR41)
9	Q23 14RD/WT (JR27)
9	Q27 14RD/BK (JR41)
10	Q24 14DG (JR27)
10	Q28 14DG/WT (JR41)
11	Q37 20OR/WT (JR27)
11	G74 20TN/RD (JR41)
12	G74 20TN/RD (JR27 EXPORT)
12	G74 20TN/RD (JR27)
13	G10 20LG/RD (JR41 EXCEPT EXPORT)
14	G75 20TN (JR27 EXPORT)
14	G75 20TN (JR27)

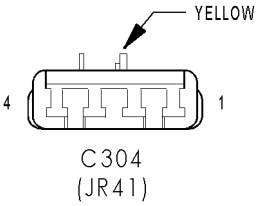

C304 (JR41) - YELLOW (INSTRUMENT PANEL SIDE)

CAV	CIRCUIT
1	R53 20LG/YL (EXCEPT SIDE AIR BAG)
1	R13 20LG/TN (SIDE AIR BAG)
2	R55 20LG/DG (EXCEPT SIDE AIR BAG)
2	R15 20LG/BR (SIDE AIR BAG)
3	R54 20LB/YL (EXCEPT SIDE AIR BAG)
3	R14 20TN/LG (SIDE AIR BAG)
4	R56 20LB/DG (EXCEPT SIDE AIR BAG)
4	R16 20BR/LG (SIDE AIR BAG)

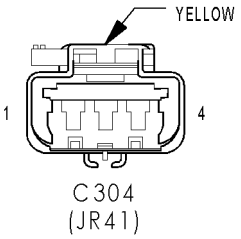

C304 (JR41) - YELLOW (UNIBODY SIDE)

CAV	CIRCUIT
1	R53 18LG/YL (EXCEPT SIDE AIR BAG)
1	R13 20LG/TN (SIDE AIR BAG)
2	R55 18LG/DG (EXCEPT SIDE AIR BAG)
2	R15 20LG/BR (SIDE AIR BAG)
3	R54 18LB/YL (EXCEPT SIDE AIR BAG)
3	R14 20TN/LG (SIDE AIR BAG)
4	R56 18LB/DG (EXCEPT SIDE AIR BAG)
4	R16 20BK/LG (SIDE AIR BAG)

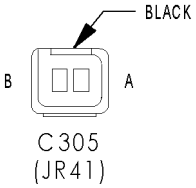

C305 (JR41) - BLACK (CHMSL SIDE)

CAV	CIRCUIT
A	L50 18BK/TN
B	Z1 18BK

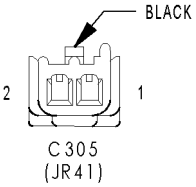

C305 (JR41) - BLACK (UNIBODY SIDE)

CAV	CIRCUIT
1	Z143 18BK
2	L50 18WT/TN

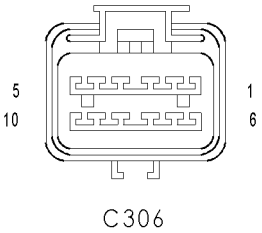

C306 - (INSTRUMENT PANEL SIDE)

CAV	CIRCUIT
1	-
2	-
3	-
4	-
5	X51 20BR/YL (BASE)
5	X93 20WT/RD (PREMIUM)
6	X52 20DB/WT (BASE)
6	X94 20TN/VT (PREMIUM)
7	X57 20BR/LB (BASE)
7	X91 20WT/BK (PREMIUM)
8	X58 20DB/OR (BASE)
8	X92 20TN/BK (PREMIUM)
9	X60 20DG/RD (EXCEPT JR27 BASE)
9	X60 20DG/RD (PREMIUM)
10	-

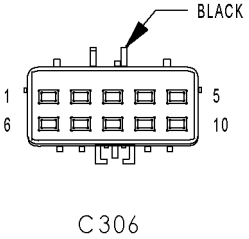

C306 - BLACK (UNIBODY SIDE)

CAV	CIRCUIT
1	-
2	-
3	-
4	-
5	X93 18WT/RD
6	X94 18TN/VT
7	X91 18WT/BK
8	X92 18TN/BK
9	X60 20DG/RD (EXPORT)
10	-

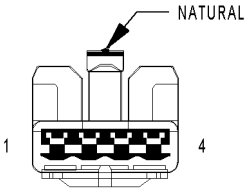

C307
(EXCEPT JR41
EXPORT)

C307 (EXCEPT JR41 EXPORT) - NATURAL
(DOME LAMP SIDE)

CAV	CIRCUIT
1	M2 18YL (JR27)
1	M2 20YL (JR41)
2	F20 20BK/WT (AUTOMATIC DAY/NIGHT MIRROR)
3	G38 18GY (JR27)
4	L1 18BK/VT (JR27 AUTOMATIC DAY/ NIGHT MIRROR)
4	L1 20BK/VT (JR41 AUTOMATIC DAY/ NIGHT MIRROR)

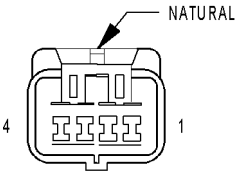

C307
(EXCEPT JR41
EXPORT)

C307 (EXCEPT JR41 EXPORT) - NATURAL (UNI-BODY SIDE)

CAV	CIRCUIT
1	M2 18YL (EXCEPT JR41 BASE)
2	F20 20WT
3	G38 18GY (JR27)
4	L1 20VT/BK

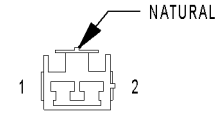

C307
(JR41 EXPORT)

C307 (JR41 EXPORT) - NATURAL (DOME LAMP SIDE)

CAV	CIRCUIT
1	M2 20YL
2	-

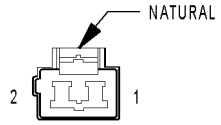

C307
(JR41 EXPORT)

C307 (JR41 EXPORT) - NATURAL (UNIBODY SIDE)

CAV	CIRCUIT
1	M2 18YL
2	-

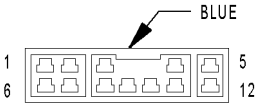

C308
(JR41)

C308 (JR41) - BLUE (REAR DOOR SIDE)

CAV	CIRCUIT
1	P179 18OR/TN
2	P181 18PK/DB
3	Q1 14YL
4	Q17 14GY/BK
5	Q27 14DG/WT
6	G77 20TN/YL
7	Z317 18BK
8	-
9	-
10	-
11	-
12	-

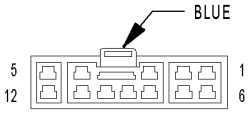

C308
(JR41)

C308 (JR41) - BLUE (UNIBODY SIDE)

CAV	CIRCUIT
1	P179 20OR/BR
2	P181 20PK/BK
3	Q1 14YL/TN
4	Q17 14DB/WT
5	Q27 14RD/BK
6	G77 20TN/OR
7	Z317 20BK/VT
8	-
9	-
10	-
11	-
12	-

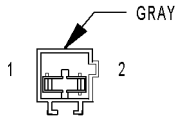

C309
(JR27
POWER SEAT)

C309 (JR27 POWER SEAT) - GRAY (POWER SEAT JUMPER SIDE)

CAV	CIRCUIT
1	F35 16RD
2	Z1 16BK

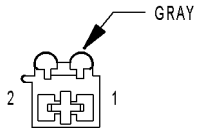

C309
(JR27
POWER SEAT)

C309 (JR27 POWER SEAT) - GRAY (UNIBODY SIDE)

CAV	CIRCUIT
1	F35 16RD
2	Z238 20BK

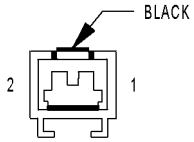

C309
(JR41
POWER SEAT)

C309 (JR41 POWER SEAT) - BLACK (POWER SEAT JUMPER SIDE)

CAV	CIRCUIT
1	F35 16RD
2	Z1 16BK

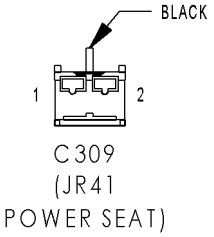

C309 (JR41 POWER SEAT) - BLACK (UNIBODY SIDE)

CAV	CIRCUIT
1	F35 16RD
2	Z238 20BK

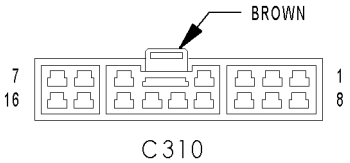

C310 - BROWN (INSTRUMENT PANEL SIDE)

CAV	CIRCUIT
1	-
2	M1 20PK
3	P97 20WT/DG
4	P91 22WT/BK
5	P95 22DB
6	-
7	Q16 14BR/WT
8	Q14 14GY (JR27)
8	Q18 14GY/BK (JR41)
9	Q37 20OR/WT (JR27)
10	P175 20OR/BK
11	P177 20DB/WT
12	P93 22YL/BK
13	G75 20TN/RD (JR27)
13	G75 20TN (JR41)
14	-
15	-
16	-

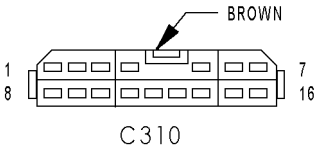

C310 - BROWN (LEFT FRONT DOOR SIDE)

CAV	CIRCUIT
1	-
2	M1 20PK
3	P97 20WT/DG
4	P91 22WT/BK
4	P91 22WT/BK (JR27 PREMIUM)
5	P95 22DB/WT
6	-
7	Q16 14BR/WT
8	Q18 14GY/BK
9	Y93 20RD/WT (JR27)
10	P175 20OR/BK
11	P177 20DB/WT
12	P93 22YL/BK
13	G75 20TN
14	-
15	-
16	-

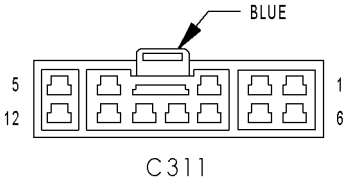

C311 - BLUE (INSTRUMENT PANEL SIDE)

CAV	CIRCUIT
1	Q1 14YL (JR41)
2	Q23 14RD/WT (JR27)
2	Q27 14RD/BK (JR41)
3	Q13 14DB (JR27)
3	Q17 14DB/WT (JR41)
4	F21 14TN
5	Q26 14VT/WT
6	Z314 14BK/TN (JR27)
6	Z243 14BK/TN (JR41)
7	Q24 14DG (JR27)
7	Q28 14DG/WT (JR41)
8	X55 20BR/RD (BASE)
8	X85 18LG/BK (JR27 PREMIUM)
8	X85 18LG/DG (JR41 PREMIUM)
9	X53 20DG (BASE)
9	X87 18LG/VT (PREMIUM)
10	G73 20LG/OR (VTSS)
11	F20 20WT/YL (JR27 EXCEPT ATC)
11	F20 20WT/YL (JR27)
12	C16 20LB/YL (POWER MIRROR)

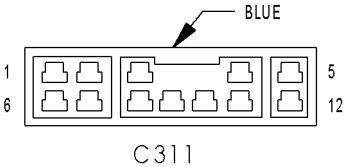

C311 - BLUE (LEFT FRONT DOOR SIDE)

CAV	CIRCUIT
1	Q1 14YL (JR41)
2	Q27 14RD/BK
3	Q17 14DB/WT
4	F21 14TN
5	Q26 14VT/WT
6	Z314 14BK (JR27)
6	Z243 14BK (JR41)
7	Q28 14DG/WT
8	X85 18LG/DG
9	X87 18LG/VT
10	G73 20LG/OR (VTSS)
11	F20 20WT (JR27)
12	C16 20LB/YL (EXCEPT JR41 BASE)

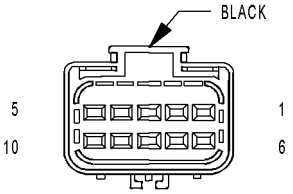

C312
(EXCEPT
JR41 BASE)

C312 (EXCEPT JR41 BASE) - BLACK (CONSOLE SIDE)

CAV	CIRCUIT
1	F20 20YL/BK (JR27)
2	Y102 20WT
3	Z316 18BK/WT (POWER OUTLET)
4	-
5	-
6	Z249 20BK (JR27)
7	M1 18PK
8	M2 18YL
9	-
10	F30 18RD (POWER OUTLET)

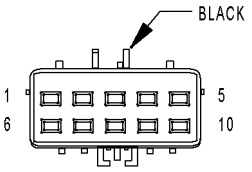

C312
(EXCEPT
JR41 BASE)

C312 (EXCEPT JR41 BASE) - BLACK (UNIBODY SIDE)

CAV	CIRCUIT
1	F20 20WT (JR27)
2	Q31 20WT/BK (JR27)
3	Z316 14BK (JR27)
3	Z316 18BK (JR41)
4	-
5	-
6	Z249 18BK (JR27)
7	M1 18PK/VT
7	M1 18PK (EXPORT)
8	M2 18YL
9	-
10	F30 18RD

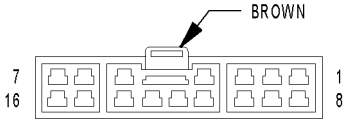

C315

C315 - BROWN (INSTRUMENT PANEL SIDE)

CAV	CIRCUIT
1	-
2	M1 20PK
3	P96 20WT/LG
4	P90 22LG/BK
5	P92 22YL
6	-
7	-
8	-
9	-
10	C16 20LB/OR (JR27)
11	P94 22WT/YL
12	-
13	G74 20TN (JR27)
13	G74 20TN/RD (JR41)
14	-
15	-
16	-

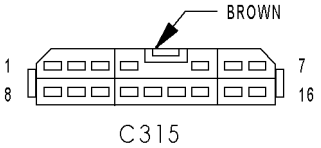

C315 - BROWN (RIGHT FRONT DOOR SIDE)

CAV	CIRCUIT
1	-
2	M1 20PK
3	P96 20WT/LG
4	P90 22LG/BK
4	P90 22LG/BK (JR27)
5	P92 22YL
6	-
7	-
8	-
9	-
10	C16 20LB/YL (PREMIUM)
11	P94 22WT/YL
12	-
13	G74 20TN/RD
14	-
15	-
16	-

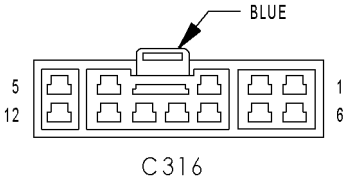

C316 - BLUE (INSTRUMENT PANEL SIDE)

CAV	CIRCUIT
1	P176 20OR/WT (JR27)
1	P176 20PK/BK (JR41)
2	P178 20PK/LB
3	Q1 14YL/VT (JR41)
4	Q16 14BR/WT
5	Q26 14VT/WT
6	Z237 20BK (JR27 EXCEPT EXPORT)
6	Z315 18BK/BR (JR27)
6	Z242 18BK/BR (JR41)
7	-
8	X56 20DB/RD (BASE)
8	X56 20DB/RD (JR27 BASE)
8	X80 18LB/BK (PREMIUM)
9	X54 20VT (BASE)
9	X54 20VT (JR27/BASE)
9	X82 18LB/VT (PREMIUM)
10	F21 14TN (JR27)
11	-
12	-

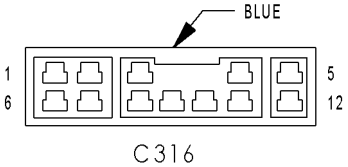

C316 - BLUE (RIGHT FRONT DOOR SIDE)

CAV	CIRCUIT
1	P176 20PK/BK
2	P178 20PK/LB
3	Q1 14YL
4	Q16 14BR/WT
5	Q26 14VT/WT
6	Z315 14BK (JR27)
6	Z242 20BK (JR41)
7	-
8	X80 18LB/BK
9	X82 18LB/VT
10	F21 14TN (JR27)
11	-
12	-

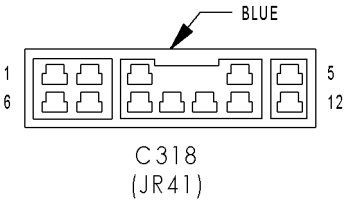

C318 (JR41) - BLUE (RIGHT REAR DOOR SIDE)

CAV	CIRCUIT
1	P180 18OR/TN
2	P182 18PK/DB
3	Q1 14YL
4	Q18 14GY/BK
5	Q28 14DG/WT
6	G76 20TN/YL
7	Z318 18BK
8	-
9	-
10	-
11	-
12	-

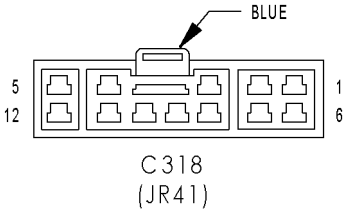

C318 (JR41) - BLUE (UNIBODY SIDE)

CAV	CIRCUIT
1	P180 20OR/TN
2	P182 20PK/DB
3	Q1 14YL/WT
4	Q18 14GY/BK
5	Q28 14DG/WT
6	G76 20TN/YL
7	Z318 20BK
8	-
9	-
10	-
11	-
12	-

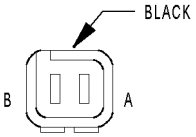

C320
(JR27)

C320 (JR27) - BLACK (REAR SIDE)

CAV	CIRCUIT
A	L7 18BK/YL
B	Z149 18BK

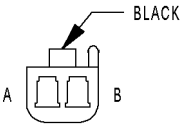

C320
(JR27)

C320 (JR27) - BLACK (UNIBODY SIDE)

CAV	CIRCUIT
A	L7 20BK/YL
B	Z149 18BK

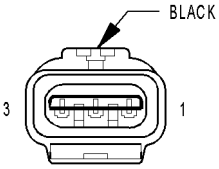

C320
(JR41)

C320 (JR41) - BLACK (REAR SIDE)

CAV	CIRCUIT
1	L7 18BK/YL
2	Z150 18BK
3	L36 18LG (REAR FOG LAMPS)

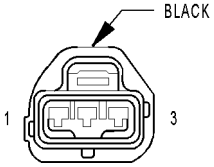

C320
(JR41)

C320 (JR41) - BLACK (UNIBODY SIDE)

CAV	CIRCUIT
1	L7 18BK/YL
2	Z150 18BK
3	L36 18LB (REAR FOG LAMPS)

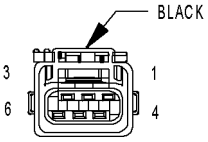

C321

C321 - BLACK (FUEL PUMP SIDE)

CAV	CIRCUIT
1	A141 14RD
2	G4 18DB
3	Z211 14BK
4	Z12 20BK (2.4L LEAK DETECTION)
4	F12 20DG/BK (2.7L LEAK DETECTION)
5	K106 20WT/DG (LEAK DETECTION)
6	K107 20OR (LEAK DETECTION)

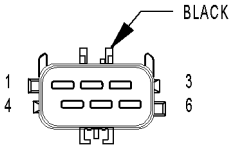

C321

C321 - BLACK (UNIBODY SIDE)

CAV	CIRCUIT
1	A141 16DG/WT
2	G4 20DB
3	Z211 16BK
4	F12 20DB/WT (LEAK DETECTION)
5	K106 20WT/DG (LEAK DETECTION)
6	K107 20OR (LEAK DETECTION)

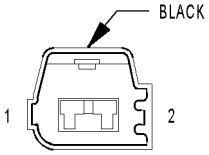

C322 (JR27 EXPORT)

C322 (JR27 EXPORT) - BLACK (FOG LAMP HARNESS)

CAV	CIRCUIT
1	Z149 18BK
2	L36 18LG

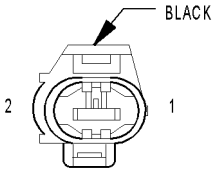

C322 (JR27 EXPORT)

C322 (JR27 EXPORT) - BLACK (LEFT TAIL/ STOP/TURN HARNESS)

CAV	CIRCUIT
1	Z149 18BK
2	L36 18LB

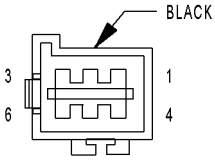

C323

C323 - BLACK (JUMPER SIDE)

CAV	CIRCUIT
1	P7 20LB/BK
2	F11 20RD/WT
3	P8 20LB/WT
4	F99 20RD/WT
5	F98 20RD/WT
6	Z260 20BK

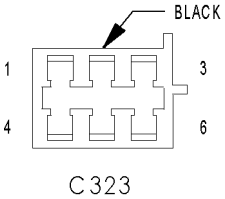

C323 - BLACK (SWITCH SIDE)

CAV	CIRCUIT
1	P7 20LB/BK
2	F11 20RD/WT
3	P8 20LB/WT
4	F99 20RD/WT
5	F98 20RD/WT
6	Z260 20BK

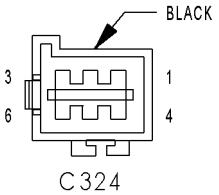

C324 - BLACK (JUMPER SIDE)

CAV	CIRCUIT
1	P86 16PK/BK
2	Z121 16BK
3	-
4	P7 20LB/BK
5	-
6	F99 20RD/WT

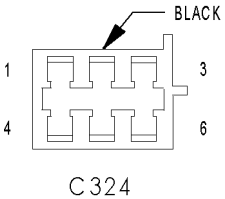

C324 - BLACK (SEAT SIDE)

CAV	CIRCUIT
1	P86 16PK/BK
2	Z121 16BK
3	-
4	P7 20LB/BK
5	-
6	F99 20RD/WT

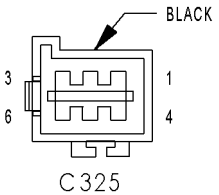

C325 - BLACK (JUMPER SIDE)

CAV	CIRCUIT
1	P86 16PK/BK
2	Z122 16BK
3	-
4	P8 20LB/WT
5	-
6	F98 20RD/WT

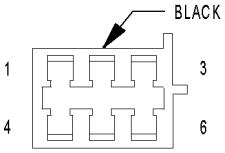

C325

C325 - BLACK (SEAT SIDE)

CAV	CIRCUIT
1	P86 16PK/BK
2	Z122 16BK
3	-
4	P8 20LB/WT
5	-
6	F98 20RD/WT

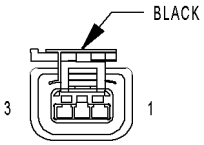

CAMSHAFT POSITION SENSOR

CAMSHAFT POSITION SENSOR - BLACK 3 WAY

CAV	CIRCUIT	FUNCTION
1	K6 20VT/WT (2.0L/2.4L)	5 VOLT SUPPLY
1	K7 20OR (2.7L)	8 VOLT SUPPLY
2	K4 20BK/LB	SENSOR GROUND 1
3	K44 20TN/YL (2.0L/2.4L)	CMP SIGNAL
3	K44 20TN/YL (2.7L)	CAMSHAFT POSITION SENSOR SIGNAL

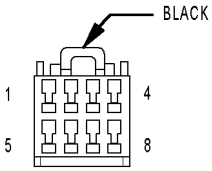

CD CHANGER

CD CHANGER - BLACK 8 WAY

CAV	CIRCUIT	FUNCTION
1	X40 22GY/WT	AUDIO OUT RIGHT
2	E14 22OR/TN	PANEL LAMPS DIMMER SIGNAL
3	D25 22VT/YL	PCI BUS
4	X112 22RD	IGNITION SWITCH OUTPUT (RUN-ACC)
5	X41 22DG/WT	AUDIO OUT LEFT
6	Z4 22BK/OR	GROUND
7	Z140 22BK/TN	GROUND
8	X160 22GY/YL	B(+)

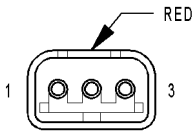

CENTER HIGH MOUNTED STOP LAMP (JR27)

CENTER HIGH MOUNTED STOP LAMP (JR27) - RED 3 WAY

CAV	CIRCUIT	FUNCTION
1	L50 18WT/TN	BRAKE LAMP SWITCH OUTPUT
2	-	-
3	Z143 18BK	GROUND

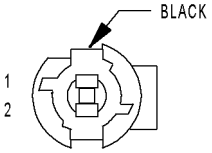

CENTER HIGH MOUNTED STOP LAMP (JR41)

CENTER HIGH MOUNTED STOP LAMP (JR41) - BLACK 2 WAY

CAV	CIRCUIT	FUNCTION
1	Z1 18BK	GROUND
2	L50 18BK/TN	BRAKE LAMP SWITCH OUTPUT

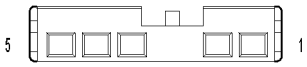

CLOCKSPRING C1

CLOCKSPRING C1 - 5 WAY

CAV	CIRCUIT	FUNCTION
1	V37 20RD/LG (2.0L/2.4L)	S/C SWITCH SIGNAL
1	V37 20RD/LG (2.7L)	SPEED CONTROL SWITCH SIGNAL
2	Z123 20BK/OR	GROUND
3	X3 20BK/RD	HORN/RADIO CONTROL MUX
4	R63 20TN/LB	DRIVER SQUIB 2 LINE 2
5	R61 20OR/LB	DRIVER SQUIB 2 LINE 1

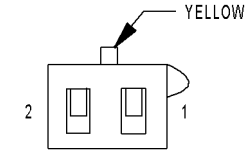

CLOCKSPRING C2

CLOCKSPRING C2 - YELLOW 2 WAY

CAV	CIRCUIT	FUNCTION
1	R43 20BK/LB	DRIVER SQUIB 1 LINE 1
2	R45 20DG/LB	DRIVER SQUIB 1 LINE 2

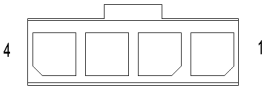

CLOCKSPRING C3

CLOCKSPRING C3 - 4 WAY

CAV	CIRCUIT	FUNCTION
1	V37 22RD/LG (2.0L/2.4L)	S/C SWITCH SIGNAL
1	V37 22RD/LG (2.7L)	SPEED CONTROL SWITCH SIGNAL
2	Z123 22BK/LB	GROUND
3	Z123 22BK/OR	GROUND
4	X3 22BK/RD	HORN/RADIO CONTROL MUX

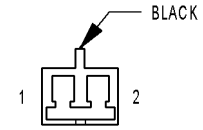

CLUTCH INTERLOCK/ UPSTOP SWITCH (MTX)

CLUTCH INTERLOCK/ UPSTOP SWITCH (MTX) - BLACK 2 WAY

CAV	CIRCUIT	FUNCTION
1	T141 20YL/RD (2.0L)	FUSED IGNITION SWITCH OUTPUT (START)
1	A41 16YL (2.7L)	FUSED IGNITION SWITCH OUTPUT (START)
2	Z1 20BK (2.0L)	GROUND
2	T141 16YL/RD (2.7L)	GROUND

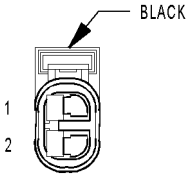

COIL ON PLUG NO. 1 (2.7L)

COIL ON PLUG NO. 1 (2.7L) - BLACK 2 WAY

CAV	CIRCUIT	FUNCTION
1	F42 18DG/LG	FUSED AUTOMATIC SHUT DOWN RELAY OUTPUT
2	K91 18TN/RD	COIL ON PLUG DRIVER NO. 1

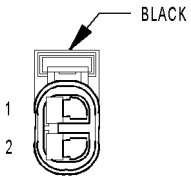

COIL ON PLUG NO. 2 (2.7L)

COIL ON PLUG NO. 2 (2.7L) - BLACK 2 WAY

CAV	CIRCUIT	FUNCTION
1	F42 18DG/LG	FUSED AUTOMATIC SHUT DOWN RELAY OUTPUT
2	K92 18TN/PK	COIL ON PLUG DRIVER NO. 2

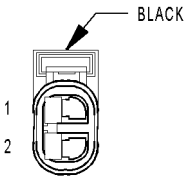

COIL ON PLUG NO. 3 (2.7L)

COIL ON PLUG NO. 3 (2.7L) - BLACK 2 WAY

CAV	CIRCUIT	FUNCTION
1	F42 18DG/LG	FUSED AUTOMATIC SHUT DOWN RELAY OUTPUT
2	K93 18TN/OR	COIL ON PLUG DRIVER NO. 3

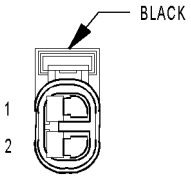

COIL ON PLUG NO. 4 (2.7L)

COIL ON PLUG NO. 4 (2.7L) - BLACK 2 WAY

CAV	CIRCUIT	FUNCTION
1	F42 18DG/LG	FUSED AUTOMATIC SHUT DOWN RELAY OUTPUT
2	K94 18TN/LG	COIL ON PLUG DRIVER NO. 4

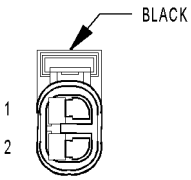

COIL ON PLUG NO. 5 (2.7L)

COIL ON PLUG NO. 5 (2.7L) - BLACK 2 WAY

CAV	CIRCUIT	FUNCTION
1	F42 18DG/LG	FUSED AUTOMATIC SHUT DOWN RELAY OUTPUT
2	K95 18TN/DG	COIL ON PLUG DRIVER NO. 5

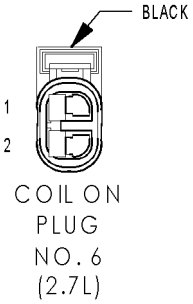

COIL ON PLUG NO. 6 (2.7L) - BLACK 2 WAY

CAV	CIRCUIT	FUNCTION
1	F42 18DG/LG	FUSED AUTOMATIC SHUT DOWN RELAY OUTPUT
2	K96 18TN/LB	COIL ON PLUG DRIVER NO. 6

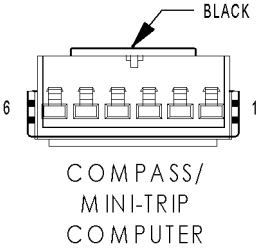

COMPASS/MINI-TRIP COMPUTER - BLACK 6 WAY

CAV	CIRCUIT	FUNCTION
1	-	-
2	D25 20VT/RD	PCI BUS
3	M1 20PK	FUSED B(+)
4	Z104 20BK	GROUND
5	F20 20WT	FUSED IGNITION SWITCH OUTPUT (RUN)
6	-	-

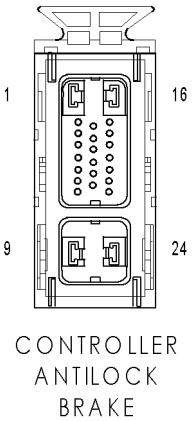

CONTROLLER ANTILOCK BRAKE - 24 WAY

CAV	CIRCUIT	FUNCTION
1	Z101 12BK	GROUND
2	B1 18YL/DB	RIGHT REAR WHEEL SPEED SENSOR SIGNAL
3	B2 20YL	RIGHT REAR WHEEL SPEED SENSOR 12 VOLT SUPPLY
4	-	-
5	D25 18YL/VT	PCI BUS
6	B6 20WT/DB	RIGHT FRONT WHEEL SPEED SENSOR SIGNAL
7	B7 20WT	RIGHT FRONT WHEEL SPEED SENSOR 12 VOLT SUPPLY
8	-	-
9	A20 12RD/DB	FUSED B(+)
10	F20 18WT	FUSED IGNITION SWITCH OUTPUT (RUN)
11	-	-
12	-	-
13	G7 18WT/OR (2.7L MTX)	VEHICLE SPEED SENSOR SIGNAL
14	-	-
15	-	-
16	Z102 12BK	GROUND
17	-	-
18	L50 20WT/TN	BRAKE LAMP SWITCH OUTPUT
19	B3 20LG/DB	LEFT REAR WHEEL SPEED SENSOR SIGNAL
20	B4 20LG	LEFT REAR WHEEL SPEED SENSOR 12 VOLT SUPPLY
21	-	-
22	B8 18RD/DB	LEFT FRONT WHEEL SPEED SENSOR SIGNAL
23	B9 20RD	LEFT FRONT WHEEL SPEED SENSOR 12 VOLT SUPPLY
24	A10 12RD/DG	FUSED B(+)

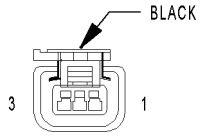

CRANKSHAFT POSITION SENSOR

CRANKSHAFT POSITION SENSOR - BLACK 3 WAY

CAV	CIRCUIT	FUNCTION
1	K6 20VT/WT (2.0L/2.4L)	5 VOLT SUPPLY
1	K7 20OR (2.7L)	8 VOLT SUPPLY
2	K4 20BK/LB	SENSOR GROUND 1
3	K24 20GY/BK (2.0L/2.4L)	CKP SIGNAL
3	K24 20GY/BK (2.7L)	CRANKSHAFT POSITION SENSOR SIGNAL

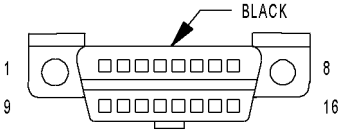

DATA LINK CONNECTOR

DATA LINK CONNECTOR - BLACK 16 WAY

CAV	CIRCUIT	FUNCTION
1	-	-
2	D25 20VT/YL	PCI BUS (DLC)
3	-	-
4	Z305 20BK/YL	GROUND
5	Z306 20BK/VT	GROUND
6	-	-
7	D21 20PK (2.0L/2.4L)	SCI TRANSMIT (PCM)
7	D21 20PK (2.7L)	SCI TRANSMIT
8	F11 20RD/WT	FUSED IGNITION SWITCH OUTPUT (OFF-RUN-START)
9	D6 20PK/LB (2.0L/2.4L EATX)	SCI RECEIVE (TCM)
9	D6 20PK/LB (2.7L EATX)	SCI RECEIVE
10	-	-
11	-	-
12	D20 20LG (2.0L/2.4L)	SCI RECEIVE (PCM)
12	D20 20LG (2.7L)	SCI RECEIVE
13	-	-
14	-	-
15	D15 20WT/DG	SCI TRANSMIT (TCM)
16	M1 20PK	FUSED B(+)

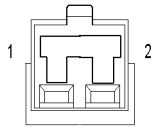

DECKLID CYLINDER LOCK SWITCH (VTSS)

DECKLID CYLINDER LOCK SWITCH (VTSS) - 2 WAY

CAV	CIRCUIT	FUNCTION
1	Z236 20BK	GROUND
2	G71 20VT/YL	DECKLID SECURITY SWITCH SENSE

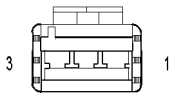

DECKLID RELEASE SOLENOID/AJAR SWITCH (JR27/JR41 EXPORT)

DECKLID RELEASE SOLENOID/AJAR SWITCH (JR27/JR41 EXPORT) - 3 WAY

CAV	CIRCUIT	FUNCTION
1	Z217 20BK (JR27)	GROUND
1	Z217 20BK/VT (JR41)	GROUND
2	G78 18TN/BK	DECKLID AJAR SWITCH SENSE
2	G78 18TN/BK	DECKLID AJAR SWITCH SENSE
3	P2 20BK/WT	DECKLID RELEASE SOLENOID DRIVER

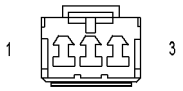

DECKLID RELEASE SOLENOID/AJAR SWITCH (JR41 EXCEPT EXPORT)

DECKLID RELEASE SOLENOID/AJAR SWITCH (JR41 EXCEPT EXPORT) - 3 WAY

CAV	CIRCUIT	FUNCTION
1	P2 20BK/WT	DECKLID RELEASE SOLENOID DRIVER
2	Z217 20BK/VT	GROUND
3	G78 18TN/BK	DECKLID AJAR SWITCH SENSE

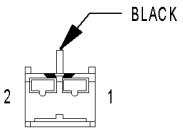

DECKLID RELEASE SWITCH

DECKLID RELEASE SWITCH - BLACK 2 WAY

CAV	CIRCUIT	FUNCTION
1	P1 20BK/WT	DECKLID RELEASE SWITCH SENSE
2	Z223 20BK/DB	GROUND

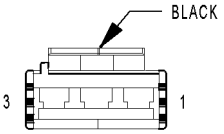

DOME LAMP (JR41)

DOME LAMP (JR41) - BLACK 3 WAY

CAV	CIRCUIT	FUNCTION
1	-	-
2	M1 20PK	FUSED B(+)
3	M2 20YL	COURTESY LAMPS DRIVER
3	M2 20YL (PREMIUM)	COURTESY LAMPS DRIVER

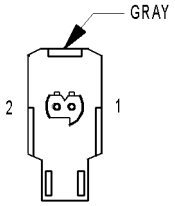

DRIVER AIRBAG SQUIB 1

DRIVER AIRBAG SQUIB 1 - GRAY 2 WAY

CAV	CIRCUIT	FUNCTION
1	R45 20DG/LB	DRIVER SQUIB 1 LINE 2
2	R43 20BK/LB	DRIVER SQUIB 1 LINE 1

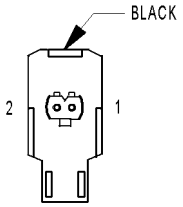

DRIVER AIRBAG SQUIB 2

DRIVER AIRBAG SQUIB 2 - BLACK 2 WAY

CAV	CIRCUIT	FUNCTION
1	R63 20DG/LB	DRIVER SQUIB 2 LINE 2
2	R61 20BK/LB	DRIVER SQUIB 2 LINE 1

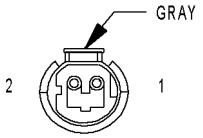

DRIVER CYLINDER LOCK SWITCH (VTSS)

DRIVER CYLINDER LOCK SWITCH (VTSS) - GRAY 2 WAY

CAV	CIRCUIT	FUNCTION
1	G73 20LG/OR	DRIVER CYLINDER LOCK SWITCH MUX
2	M1 20PK	FUSED B(+)

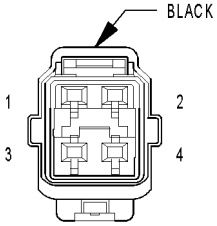

DRIVER DOOR LOCK MOTOR/ AJAR SWITCH

DRIVER DOOR LOCK MOTOR/AJAR SWITCH - BLACK 4 WAY

CAV	CIRCUIT	FUNCTION
1	G75 20TN	DRIVER DOOR AJAR SWITCH SENSE
2	Z314 20BK (JR27)	GROUND
2	Z243 20BK (JR41)	GROUND
3	P177 20DB/WT	DRIVER UNLOCK RELAY OUTPUT
4	P175 20OR/BK	DRIVER LOCK RELAY OUTPUT

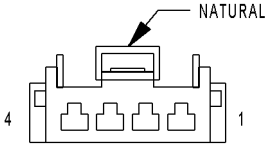

DRIVER DOOR LOCK SWITCH

DRIVER DOOR LOCK SWITCH - NATURAL 4 WAY

CAV	CIRCUIT	FUNCTION
1	M1 20PK	FUSED B(+)
2	-	-
3	Z314 20BK	GROUND
4	P97 20WT/DG	DRIVER DOOR SWITCH MUX

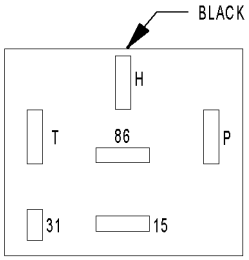

DRIVER HEATED SEAT MODULE

DRIVER HEATED SEAT MODULE - BLACK 6 WAY

CAV	CIRCUIT	FUNCTION
15	P86 16PK/BK	HEATED SEAT RELAY OUTPUT
31	Z121 16BK	GROUND
86	F99 20RD/WT	DRIVER HEATED SEAT FEED
H	-	-
P	P7 20LB/BK	DRIVER HEATED SEAT SWITCH OUTPUT
T	-	-

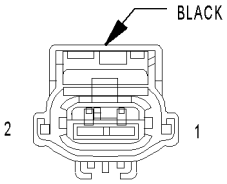

DRIVER POWER WINDOW MOTOR (JR27)

DRIVER POWER WINDOW MOTOR (JR27) - BLACK 2 WAY

CAV	CIRCUIT	FUNCTION
1	Q21 14WT	MASTER POWER WINDOW SWITCH LEFT FRONT (DOWN)
2	Q11 14LB	DRIVER POWER WINDOW DRIVER (UP)

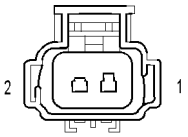

DRIVER POWER WINDOW MOTOR (JR41)

DRIVER POWER WINDOW MOTOR (JR41) - 2 WAY

CAV	CIRCUIT	FUNCTION
1	Q21 16WT	LEFT FRONT WINDOW DRIVER (DOWN)
2	Q11 16LB	LEFT FRONT WINDOW DRIVER (UP)

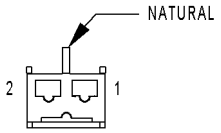

DRIVER SEAT BELT SOLENOID (JR27 EXPORT)

DRIVER SEAT BELT SOLENOID (JR27 EXPORT) - NATURAL 2 WAY

CAV	CIRCUIT	FUNCTION
1	R7 18OR/BK	DRIVER SEAT BELT SOLENOID CONTROL
2	Z220 18BK	GROUND

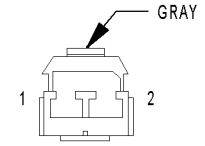

DRIVER SEAT BELT SWITCH (JR41 EXCEPT EXPORT)

DRIVER SEAT BELT SWITCH (JR41 EXCEPT EXPORT) - GRAY 2 WAY

CAV	CIRCUIT	FUNCTION
1	Z237 20BK	GROUND
2	G10 20LG/RD	SEAT BELT SWITCH SENSE

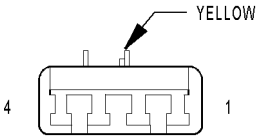

DRIVER SEAT BELT TENSIONER (JR27)

DRIVER SEAT BELT TENSIONER (JR27) - YELLOW 4 WAY

CAV	CIRCUIT	FUNCTION
1	Z237 20BK (EXCEPT EXPORT)	GROUND
2	G10 20LG/RD (EXCEPT EXPORT)	SEAT BELT SWITCH SENSE
3	R53 20LG/YL	DRIVER SEAT BELT TENSIONER LINE 2
4	R55 20LG/DG	DRIVER SEAT BELT TENSIONER LINE 1

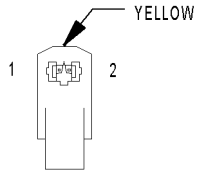

DRIVER SEAT BELT TENSIONER (JR41)

DRIVER SEAT BELT TENSIONER (JR41) - YELLOW 2 WAY

CAV	CIRCUIT	FUNCTION
1	R53 18LG/YL	DRIVER SEAT BELT TENSIONER LINE 2
2	R55 18LG/DG	DRIVER SEAT BELT TENSIONER LINE 1

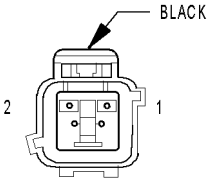

ENGINE COOLANT TEMP SENSOR

ENGINE COOLANT TEMP SENSOR - BLACK 2 WAY

CAV	CIRCUIT	FUNCTION
1	K2 20TN/BK (2.0L/2.4L)	ECT SIGNAL
1	K2 20TN/BK (2.7L)	ENGINE COOLANT TEMPERATURE SENSOR SIGNAL
2	K4 20BK/LB	SENSOR GROUND 1

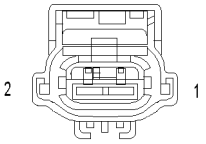

EVAP/PURGE SOLENOID

EVAP/PURGE SOLENOID - 2 WAY

CAV	CIRCUIT	FUNCTION
1	K52 20PK/BK (2.0L/2.4L)	EVAP PURGE CONTROL
1	K52 20PK/BK (2.7L)	EVAPORATIVE EMISSION SOLENOID CONTROL
2	K108 20WT/TN (2.0L/2.4L)	EVAP PURGE RETURN
2	K108 20WT/TN (2.7L)	EVAPORATIVE SOLENOID SENSE

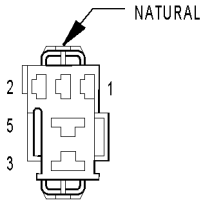

FOG LAMP RELAY (PREMIUM)

FOG LAMP RELAY (PREMIUM) - NATURAL 5 WAY

CAV	CIRCUIT	FUNCTION
1	L35 20BR/WT	FOG LAMP SWITCH OUTPUT
2	E17 18YL/BK	DAY BRIGHTNESS SENSE
3	L39 18LB	FRONT FOG LAMP INDICATOR DRIVER
4	-	-
5	A15 16PK/LB	FUSED B(+)

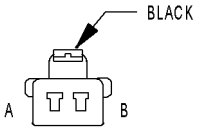

FRONT VERTICAL MOTOR (JR27)

FRONT VERTICAL MOTOR (JR27) - BLACK 2 WAY

CAV	CIRCUIT	FUNCTION
A	P19 18YL/LG	LEFT SEAT FRONT DOWN
B	P21 18RD/LG	LEFT SEAT FRONT UP

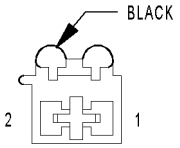

FRONT VERTICAL MOTOR (JR41)

FRONT VERTICAL MOTOR (JR41) - BLACK 2 WAY

CAV	CIRCUIT	FUNCTION
1	P19 18YL/LG	LEFT SEAT FRONT UP
2	P21 18RD/LG	LEFT SEAT FRONT DOWN

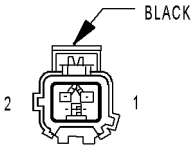

FRONT WASHER PUMP MOTOR

FRONT WASHER PUMP MOTOR - BLACK 2 WAY

CAV	CIRCUIT	FUNCTION
1	Z216 18BK	GROUND
2	V10 18BR	FRONT WASHER PUMP MOTOR CONTROL

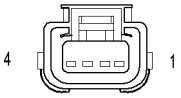

FRONT WIPER MOTOR

FRONT WIPER MOTOR - 4 WAY

CAV	CIRCUIT	FUNCTION
1	V55 20TN/RD	FRONT WIPER PARK SWITCH SENSE
2	Z114 20BK	GROUND
3	V3 16BR/WT	FRONT WIPER LOW SPEED OUTPUT
4	V4 16RD/YL	FRONT WIPER HIGH SPEED OUTPUT

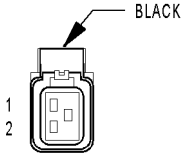

FUEL INJECTOR NO. 1

FUEL INJECTOR NO. 1 - BLACK 2 WAY

CAV	CIRCUIT	FUNCTION
1	A142 16DG/OR (2.0L/2.4L)	AUTOMATIC SHUT DOWN RELAY OUTPUT
1	F42 18DG/LG (2.7L)	FUSED AUTOMATIC SHUT DOWN RELAY OUTPUT
2	K11 18WT/DB (2.0L/2.4L)	INJECTOR CONTROL NO. 1
2	K11 18WT/DB (2.7L)	FUEL INJECTOR NO. 1 DRIVER

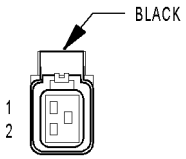

FUEL INJECTOR NO. 2

FUEL INJECTOR NO. 2 - BLACK 2 WAY

CAV	CIRCUIT	FUNCTION
1	A142 16DG/OR (2.0L/2.4L)	AUTOMATIC SHUT DOWN RELAY OUTPUT
1	F42 18DG/LG (2.7L)	FUSED AUTOMATIC SHUT DOWN RELAY OUTPUT
2	K12 18TN (2.0L/2.4L)	INJECTOR CONTROL NO. 2
2	K12 18TN (2.7L)	FUEL INJECTOR NO. 2 DRIVER

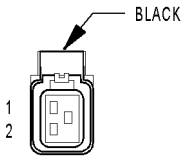

FUEL INJECTOR NO. 3

FUEL INJECTOR NO. 3 - BLACK 2 WAY

CAV	CIRCUIT	FUNCTION
1	A142 16DG/OR (2.0L/2.4L)	AUTOMATIC SHUT DOWN RELAY OUTPUT
1	F42 18DG/LG (2.7L)	FUSED AUTOMATIC SHUT DOWN RELAY OUTPUT
2	K13 18YL/WT (2.0L/2.4L)	INJECTOR CONTROL NO. 3
2	K13 18YL/WT (2.7L)	FUEL INJECTOR NO. 3 DRIVER

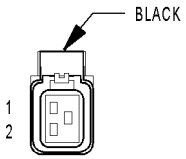

FUEL INJECTOR NO. 4

FUEL INJECTOR NO. 4 - BLACK 2 WAY

CAV	CIRCUIT	FUNCTION
1	A142 16DG/OR (2.0L/2.4L)	AUTOMATIC SHUT DOWN RELAY OUTPUT
1	F42 18DG/LG (2.7L)	FUSED AUTOMATIC SHUT DOWN RELAY OUTPUT
2	K14 18LB/BR (2.0L/2.4L)	INJECTOR CONTROL NO. 4
2	K14 18LB/BR (2.7L)	FUEL INJECTOR NO. 4 DRIVER

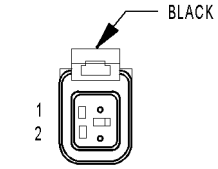

FUEL INJECTOR NO. 5 (2.7L)

FUEL INJECTOR NO. 5 (2.7L) - BLACK 2 WAY

CAV	CIRCUIT	FUNCTION
1	F42 18DG/LG	FUSED AUTOMATIC SHUT DOWN RELAY OUTPUT
2	K38 18GY	FUEL INJECTOR NO. 5 DRIVER

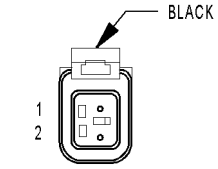

FUEL INJECTOR NO. 6 (2.7L)

FUEL INJECTOR NO. 6 (2.7L) - BLACK 2 WAY

CAV	CIRCUIT	FUNCTION
1	F42 18DG/LG	FUSED AUTOMATIC SHUT DOWN RELAY OUTPUT
2	K58 18BR/DB	FUEL INJECTOR NO. 6 DRIVER

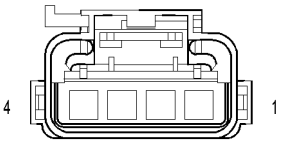

FUEL PUMP MODULE

FUEL PUMP MODULE - 4 WAY

CAV	CIRCUIT	FUNCTION
1	Z211 12BK	GROUND
2	Z211 18BK	GROUND
3	G4 18DB	FUEL LEVEL SENSOR SIGNAL
4	A141 14RD	FUEL PUMP RELAY OUTPUT

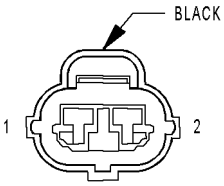

GENERATOR

GENERATOR - BLACK 2 WAY

CAV	CIRCUIT	FUNCTION
1	Z12 20BK/TN (2.0L/2.4L)	GROUND
1	F142 18OR/DG (2.7L)	FUSED AUTOMATIC SHUT DOWN RELAY OUTPUT
2	K20 18DG (2.0L/2.4L)	GEN FIELD CONTROL
2	K20 18DG (2.7L)	GENERATOR FIELD DRIVER

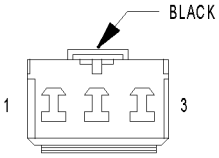

HEADLAMP LEVELING SWITCH (EXPORT)

HEADLAMP LEVELING SWITCH (EXPORT) - BLACK 3 WAY

CAV	CIRCUIT	FUNCTION
1	L7 18BK/YL	HEADLAMP SWITCH OUTPUT
2	Z3 16BK/OR (JR27)	GROUND
2	Z3 16BK (JR41)	GROUND
3	L101 18RD	HEADLAMP ADJUST SIGNAL

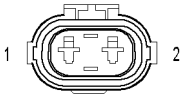

HEADLAMP WASHER PUMP MOTOR (JR41 EXPORT)

HEADLAMP WASHER PUMP MOTOR (JR41 EXPORT) - 2 WAY

CAV	CIRCUIT	FUNCTION
1	V53 14RD/YL	HEADLAMP WASHER RELAY OUTPUT
2	Z216 14BK	GROUND

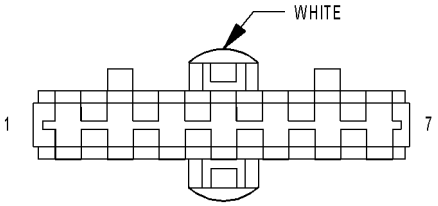

HEATED SEAT SWITCH

HEATED SEAT SWITCH - WHITE 7 WAY

CAV	CIRCUIT	FUNCTION
1	Z260 20BK	GROUND
2	-	-
3	F99 20RD/BK	DRIVER HEATED SEAT FEED
4	F98 20RD/WT	PASSENGER HEATED SEAT FEED
5	P7 20LB/BK	DRIVER HEATED SEAT SWITCH OUTPUT
6	F11 20RD	FUSED IGNITION SWITCH OUTPUT (OFF-RUN-START)
7	P8 20LB/WT	PASSENGER HEATED SEAT SWITCH OUTPUT

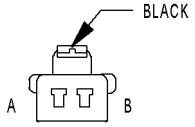

HORIZONTAL MOTOR (JR27)

HORIZONTAL MOTOR (JR27) - BLACK 2 WAY

CAV	CIRCUIT	FUNCTION
A	P17 18RD/LB	LEFT SEAT HORIZONTAL REARWARD
B	P15 18YL/LB	LEFT SEAT HORIZONTAL FORWARD

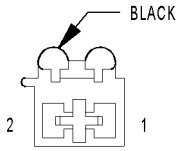

HORIZONTAL MOTOR (JR41)

HORIZONTAL MOTOR (JR41) - BLACK 2 WAY

CAV	CIRCUIT	FUNCTION
1	P15 18YL/LB	LEFT SEAT HORIZONTAL REARWARD
2	P17 18RD/LB	LEFT SEAT HORIZONTAL FORWARD

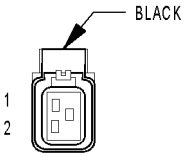

HORN

HORN - BLACK 2 WAY

CAV	CIRCUIT	FUNCTION
1	Z307 20BK	GROUND
2	X2 20DG/RD	HORN RELAY OUTPUT

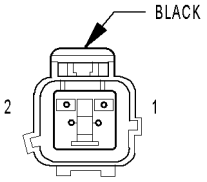

IDLE AIR CONTROL MOTOR (2.0L/2.4L)

IDLE AIR CONTROL MOTOR (2.0L/2.4L) - BLACK 2 WAY

CAV	CIRCUIT	FUNCTION
1	K39 18GY/RD	IAC MOTOR CONTROL
2	K60 18YL/BK	IAC RETURN

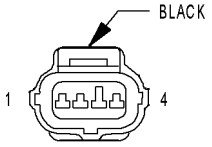

IDLE AIR CONTROL MOTOR (2.7L)

IDLE AIR CONTROL MOTOR (2.7L) - BLACK 4 WAY

CAV	CIRCUIT	FUNCTION
1	K39 20GY/RD	IDLE AIR CONTROL MOTOR NO. 1 DRIVER
2	K60 20YL/BK	IDLE AIR CONTROL MOTOR NO. 2 DRIVER
3	K40 20BR/WT	IDLE AIR CONTROL MOTOR NO. 3 DRIVER
4	K59 20VT/BK	IDLE AIR CONTROL MOTOR NO. 4 DRIVER

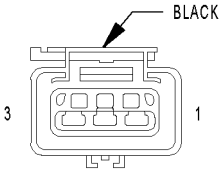

IGNITION COIL PACK (2.0L/2.4L)

IGNITION COIL PACK (2.0L/2.4L) - BLACK 3 WAY

CAV	CIRCUIT	FUNCTION
1	K17 18DB/TN	COIL CONTROL NO. 2
2	A142 14DG/OR	AUTOMATIC SHUT DOWN RELAY OUTPUT
3	K19 18BK/GY	COIL CONTROL NO. 1

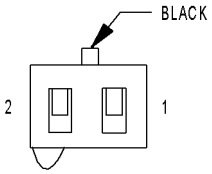

IGNITION SWITCH C1

IGNITION SWITCH C1 - BLACK 2 WAY

CAV	CIRCUIT	FUNCTION
1	A51 20RD/WT	FUSED B(+)
2	A81 20DG/RD	FUSED IGNITION SWITCH OUTPUT (OFF-RUN-START)

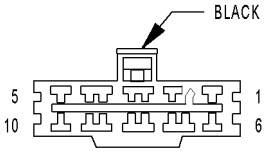

IGNITION SWITCH C2

IGNITION SWITCH C2 - BLACK 10 WAY

CAV	CIRCUIT	FUNCTION
1	-	-
2	-	-
3	A2 12PK/BK	FUSED B(+)
4	A22 12BK/OR	FUSED IGNITION SWITCH OUTPUT (RUN)
5	-	-
6	-	-
7	A1 18RD	FUSED B(+)
8	A31 16BK/WT	FUSED IGNITION SWITCH OUTPUT (RUN-ACC)
8	A31 18BK/LB	FUSED IGNITION SWITCH OUTPUT (RUN-ACC)
9	A21 16DB	FUSED IGNITION SWITCH OUTPUT (RUN-START)
10	A41 18YL	FUSED IGNITION SWITCH OUTPUT (START)

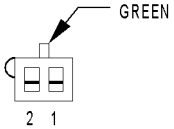

IGNITION SWITCH C3

IGNITION SWITCH C3 - GREEN 2 WAY

CAV	CIRCUIT	FUNCTION
1	Z233 20BK/WT	GROUND
2	G26 20LB	KEY-IN IGNITION SWITCH SENSE

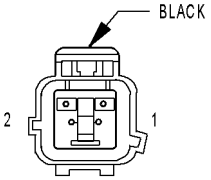

INLET AIR TEMP SENSOR

INLET AIR TEMP SENSOR - BLACK 2 WAY

CAV	CIRCUIT	FUNCTION
1	K21 20BK/RD (2.0L/2.4L)	IAT SIGNAL
1	K21 20BK/RD (2.7L)	INLET AIR TEMPERATURE SENSOR SIGNAL
2	K4 20BK/LB	SENSOR GROUND 1

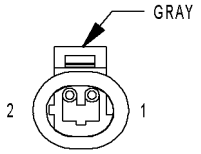

INPUT SPEED SENSOR

INPUT SPEED SENSOR - GRAY 2 WAY

CAV	CIRCUIT	FUNCTION
1	T13 18DB/BK	SPEED SENSOR GROUND
2	T52 18RD/BK	INPUT SPEED SENSOR SIGNAL

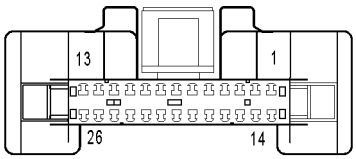

INSTRUMENT CLUSTER

INSTRUMENT CLUSTER - 26 WAY

CAV	CIRCUIT	FUNCTION
1	-	-
2	D25 20VT/OR	PCI BUS (MIC)
3	D25 20VT/RD	PCI BUS (TRAVELER)
4	-	-
5	G69 20BK/OR	VTSS INDICATOR DRIVER
6	-	-
7	-	-
8	B27 20RD/YL	TRACTION CONTROL SWITCH SENSE
9	-	-
10	Z105 20BK/LB	GROUND
11	Z106 18BK/OR	GROUND
12	E2 20OR	PANEL LAMPS DRIVER
13	L36 18LG (REAR FOG LAMPS)	REAR FOG LAMP INDICATOR
14	G6 20GY	ENGINE OIL PRESSURE SWITCH SENSE
15	F11 20RD/WT	FUSED IGNITION SWITCH OUTPUT (OFF-RUN-START)
16	-	-
17	-	-
18	L61 18LG/TN	LEFT TURN SIGNAL
19	L60 18TN/BR	RIGHT TURN SIGNAL
20	-	-
21	F33 20PK/WT	FUSED B(+)
22	G9 18GY/BK	BRAKE WARNING INDICATOR DRIVER
23	Z104 20BK	GROUND
24	G10 20LG/RD (EXCEPT EXPORT)	SEAT BELT SWITCH SENSE
25	-	-
26	L39 18LB	FOG LAMP RELAY OUTPUT

JUNCTION BLOCK BODY CONTROL MODULE JB

JUNCTION BLOCK BODY CONTROL MODULE JB - 12 WAY

CAV	CIRCUIT	FUNCTION
1	L3 14RD/OR	DIMMER SWITCH HIGH BEAM OUTPUT
2	INTERNAL	FUSED B(+)
3	INTERNAL	REAR WINDOW DEFOGGER RELAY CONTROL
4	INTERNAL	HEADLAMP DELAY RELAY OUTPUT
5	INTERNAL	HEADLAMP DELAY RELAY CONTROL
6	INTERNAL	FUSED IGNITION SWITCH OUTPUT (OFF-RUN-START)
7	INTERNAL	HORN RELAY CONTROL
8	INTERNAL	HEADLAMP SWITCH OUTPUT
9	M2 18YL (JR27)	COURTESY LAMPS DRIVER
9	M2 20YL (JR41)	COURTESY LAMPS DRIVER
10	INTERNAL	GROUND
11	INTERNAL	FUSED IGNITION SWITCH OUTPUT (RUN-START)
12	INTERNAL	FUSED B(+)

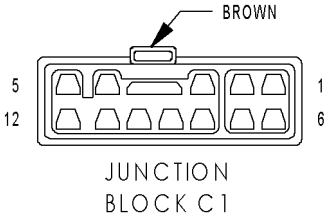

JUNCTION BLOCK C1 - BROWN 12 WAY

CAV	CIRCUIT	FUNCTION
1	G9 20GY/BK	BRAKE WARNING INDICATOR DRIVER
2	-	-
3	L34 18RD/OR	FUSED RIGHT HIGH BEAM OUTPUT
4	L60 20TN	RIGHT TURN SIGNAL
5	L61 16LG	LEFT TURN SIGNAL
6	L33 20LG/BR	FUSED LEFT HIGH BEAM OUTPUT
7	-	-
8	L7 20BK/YL	HEADLAMP SWITCH OUTPUT
9	L7 20BK/BR	HEADLAMP SWITCH OUTPUT
10	L39 20LB/OR (FRONT FOG LAMPS)	FOG LAMP SWITCH OUTPUT
11	L39 20LB (FRONT FOG LAMPS)	FOG LAMP SWITCH OUTPUT
12	L43 18VT	FUSED LEFT LOW BEAM OUTPUT

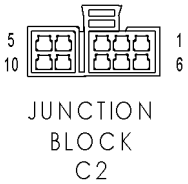

JUNCTION BLOCK C2 - 10 WAY

CAV	CIRCUIT	FUNCTION
1	L50 20WT/TN (ABS)	BRAKE LAMP SWITCH OUTPUT
2	A7 18RD/BK	FUSED B(+)
3	L50 16WT/TN	BRAKE LAMP SWITCH OUTPUT
4	F20 18WT	FUSED IGNITION SWITCH OUTPUT (RUN)
5	L44 20VT/RD	FUSED RIGHT LOW BEAM OUTPUT
6	F11 18RD/WT	FUSED IGNITION SWITCH OUTPUT (OFF-RUN-START)
7	A21 16DB	FUSED IGNITION SWITCH OUTPUT (RUN-START)
8	X2 20DG/RD	HORN RELAY OUTPUT
9	F20 18WT/YL	FUSED IGNITION SWITCH OUTPUT (RUN)
10	F13 20DB	FUSED IGNITION SWITCH OUTPUT (RUN-ACC)

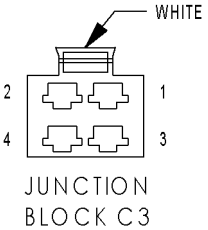

JUNCTION BLOCK C3 - WHITE 4 WAY

CAV	CIRCUIT	FUNCTION
1	A7 16RD/BK	FUSED B(+)
2	A13 12PK/WT	FUSED B(+)
3	A3 12RD/WT	FUSED B(+)
4	A4 12BK/PK	FUSED B(+)

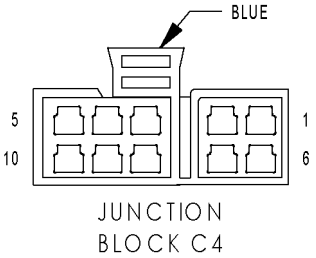

JUNCTION BLOCK C4 - BLUE 10 WAY

CAV	CIRCUIT	FUNCTION
1	-	-
2	Z106 18BK/OR	GROUND
3	Z239 20BK/LB	GROUND
4	F23 20DB/YL	FUSED IGNITION SWITCH OUTPUT (RUN)
5	G9 20GY/BK	BRAKE WARNING INDICATOR DRIVER
6	Z3 16BK/OR (JR27/EXPORT)	GROUND
6	Z3 16BK (JR41/EXPORT)	GROUND
7	Z305 20BK/YL	GROUND
8	-	-
9	Z115 16BK/RD (PREMIUM)	GROUND
10	Z126 16BK/LG (JR41 PREMIUM)	GROUND

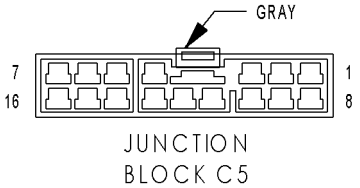

JUNCTION BLOCK C5 - GRAY 16 WAY

CAV	CIRCUIT	FUNCTION
1	F75 16VT (PREMIUM)	FUSED B(+)
2	-	-
3	L7 16BK/YL	HEADLAMP SWITCH OUTPUT
4	-	-
5	L39 20LB/WT (BASE/EXPORT)	FOG LAMP SWITCH OUTPUT
6	G9 18GY/BK	BRAKE WARNING INDICATOR DRIVER
7	-	-
8	-	-
9	A21 16DB	FUSED IGNITION SWITCH OUTPUT (RUN-START)
10	L39 18LB	FOG LAMP SWITCH OUTPUT
11	-	-
12	M1 18PK	FUSED B(+)
13	M1 20PK/DB	FUSED B(+)
14	A31 16BK/WT	FUSED IGNITION SWITCH OUTPUT (RUN-ACC)
15	Z110 20BK	GROUND
16	F14 20LG/YL	FUSED IGNITION SWITCH OUTPUT (RUN-START)
16	F14 18LG/YL (JR41)	FUSED IGNITION SWITCH OUTPUT (RUN-START)

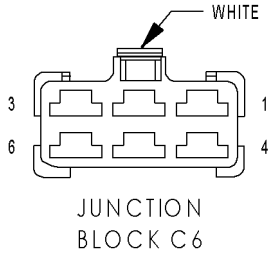

JUNCTION BLOCK C6 - WHITE 6 WAY

CAV	CIRCUIT	FUNCTION
1	A22 12BK/OR	FUSED IGNITION SWITCH OUTPUT (RUN)
2	L4 16VT/WT	DIMMER SWITCH LOW BEAM OUTPUT
2	L4 16VT/WT (BASE/EXPORT)	DIMMER SWITCH LOW BEAM OUTPUT
3	L3 14RD/OR	DIMMER SWITCH HIGH BEAM OUTPUT
4	A3 16RD/WT	FUSED B(+)
4	A3 16RD/WT	FUSED B(+)
5	-	-
6	C1 14DG	FUSED IGNITION SWITCH OUTPUT (RUN)

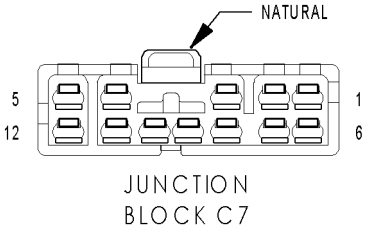

JUNCTION BLOCK C7 - NATURAL 12 WAY

CAV	CIRCUIT	FUNCTION
1	F13 18DB	FUSED IGNITION SWITCH OUTPUT (RUN-ACC)
2	A81 20DG/RD	FUSED IGNITION SWITCH OUTPUT (OFF-RUN-START)
3	L60 18TN/BR	RIGHT TURN SIGNAL
4	L44 20VT/RD (FOG LAMPS)	FUSED RIGHT LOW BEAM OUTPUT
5	C16 20LB/YL (MTC)	FUSED REAR WINDOW DEFOGGER RELAY OUTPUT
6	X12 18RD/WT	FUSED IGNITION SWITCH OUTPUT (RUN-ACC)
7	L61 20LG	LEFT TURN SIGNAL
8	L60 16TN	RIGHT TURN SIGNAL
9	L61 18LG/TN	LEFT TURN SIGNAL
10	F11 18RD/WT	FUSED IGNITION SWITCH OUTPUT (OFF-RUN-START)
11	F33 20PK/WT	FUSED B(+)
12	F33 16PK/RD	FUSED B(+)

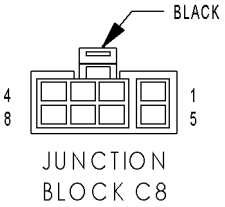

JUNCTION BLOCK C8 - BLACK 8 WAY

CAV	CIRCUIT	FUNCTION
1	Q1 14YL (JR41)	POWER WINDOW SWITCH FEED
2	M1 16PK	FUSED B(+)
3	C16 20LB/YL (MTC)	FUSED REAR WINDOW DEFOGGER RELAY OUTPUT
4	C16 20LB/OR (MTC)	FUSED REAR WINDOW DEFOGGER RELAY OUTPUT
5	F21 14TN	FUSED IGNITION SWITCH OUTPUT (RUN)
6	Q1 14YL/VT (JR41)	POWER WINDOW SWITCH FEED
7	Q1 14YL/WT (JR41)	POWER WINDOW SWITCH FEED
8	Q1 14YL/TN (JR41)	POWER WINDOW SWITCH FEED

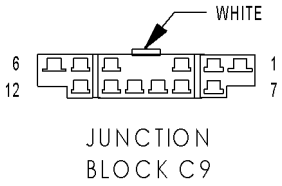

JUNCTION BLOCK C9 - WHITE 12 WAY

CAV	CIRCUIT	FUNCTION
1	F35 16RD (POWER SEATS)	FUSED B(+)
2	F20 20WT	FUSED IGNITION SWITCH OUTPUT (RUN)
2	F20 20WT (JR27)	FUSED IGNITION SWITCH OUTPUT (RUN)
3	Z313 14BK	GROUND
4	L60 20TN	RIGHT TURN SIGNAL
5	L61 20LG (JR27)	LEFT TURN SIGNAL
5	L61 20LG/TN (JR41)	LEFT TURN SIGNAL
6	C15 12BK/WT	REAR WINDOW DEFOGGER RELAY OUTPUT
7	M1 18PK/VT (JR27/JR41 EXPORT)	FUSED B(+)
8	-	-
9	L50 18WT/TN	BRAKE LAMP SWITCH OUTPUT
9	L50 18WT/TN	BRAKE LAMP SWITCH OUTPUT
10	L7 20BK/YL	HEADLAMP SWITCH OUTPUT
10	L7 20BK/YL (JR27)	HEADLAMP SWITCH OUTPUT
11	-	-
12	M1 18PK	FUSED B(+)

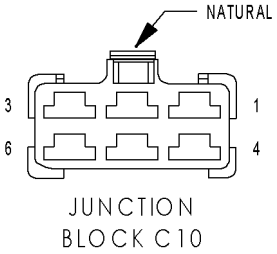

JUNCTION BLOCK C10 - NATURAL 6 WAY

CAV	CIRCUIT	FUNCTION
1	M2 18YL (JR27)	COURTESY LAMPS DRIVER
1	M2 18BK/YL (JR27)	COURTESY LAMPS DRIVER
1	M2 20YL (JR41)	COURTESY LAMPS DRIVER
1	M2 20YL (JR41)	COURTESY LAMPS DRIVER
2	-	-
3	F21 18TN (JR41/PREMIUM)	FUSED IGNITION SWITCH OUTPUT (RUN)
4	Z312 18BK (JR27)	GROUND
4	Z312 18BK (JR27/JR41/PREMIUM)	GROUND
5	-	-
6	M1 18PK (JR27)	FUSED B(+)
6	M1 20PK (JR41)	FUSED B(+)

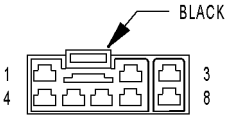

JUNCTION BLOCK C11 (EXPORT)

JUNCTION BLOCK C11 (EXPORT) - BLACK 8 WAY

CAV	CIRCUIT	FUNCTION
1	-	-
2	L25 20BR	FUSED FOG LAMP SWITCH FEED
3	-	-
4	-	-
5	-	-
6	-	-
7	-	-
8	-	-

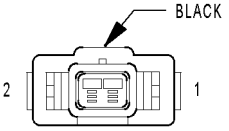

KNOCK SENSOR (2.0L/2.4L)

KNOCK SENSOR (2.0L/2.4L) - BLACK 2 WAY

CAV	CIRCUIT	FUNCTION
1	K42 20DB/LG	KS SIGNAL
2	K45 20BK/VT	KS RETURN

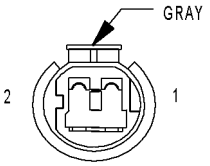

KNOCK SENSOR (2.7L)

KNOCK SENSOR (2.7L) - GRAY 2 WAY

CAV	CIRCUIT	FUNCTION
1	K4 20BK/LB	SENSOR GROUND 1
2	K42 18BK/VT	KNOCK SENSOR SIGNAL

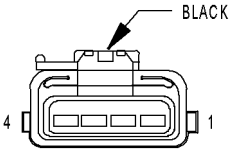

LEAK DETECTION PUMP (2.7L)

LEAK DETECTION PUMP (2.7L) - BLACK 4 WAY

CAV	CIRCUIT	FUNCTION
1	-	-
2	F12 20DG/BK	FUSED IGNITION SWITCH OUTPUT (RUN-START)
3	K106 20WT/DG	LEAK DETECTION PUMP SOLENOID CONTROL
4	K107 20OR	LEAK DETECTION PUMP SWITCH SENSE

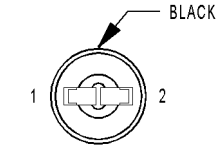

LEFT BACK-UP LAMP

LEFT BACK-UP LAMP - BLACK 2 WAY

CAV	CIRCUIT	FUNCTION
1	Z149 18BK (JR27)	GROUND
1	Z150 18BK (JR41)	GROUND
2	L1 18VT/BK	BACK-UP LAMP FEED

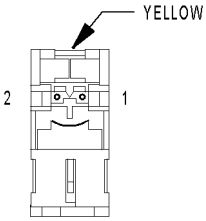

LEFT CURTAIN AIRBAG SQUIB (JR41)

LEFT CURTAIN AIRBAG SQUIB (JR41) - YELLOW 2 WAY

CAV	CIRCUIT	FUNCTION
1	R77 20LB/BR	LEFT CURTAIN SQUIB 1 LINE 2
2	R75 20LB/OR	LEFT CURTAIN SQUIB 1 LINE 1

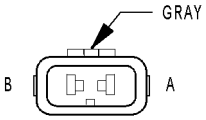

LEFT FOG LAMP (JR27)

LEFT FOG LAMP (JR27) - GRAY 2 WAY

CAV	CIRCUIT	FUNCTION
A	L39 20LB/OR	FOG LAMP RELAY OUTPUT
B	Z145 20BK	GROUND

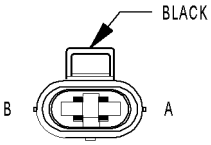

LEFT FOG LAMP (JR41)

LEFT FOG LAMP (JR41) - BLACK 2 WAY

CAV	CIRCUIT	FUNCTION
A	L39 20LB/OR	FOG LAMP RELAY OUTPUT
B	Z145 20BK	GROUND

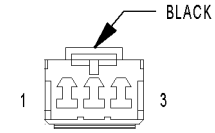

LEFT FRONT DOOR SPEAKER

LEFT FRONT DOOR SPEAKER - BLACK 3 WAY

CAV	CIRCUIT	FUNCTION
1	X58 18LG/DG (BASE)	LEFT FRONT SPEAKER (-)
1	X85 18LG/DG (PREMIUM)	AMPLIFIED LEFT FRONT SPEAKER (-)
2	-	-
3	X87 18LG/VT (BASE)	LEFT FRONT SPEAKER (+)
3	X87 18LG/VT (PREMIUM)	AMPLIFIED LEFT FRONT SPEAKER (+)

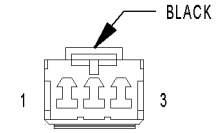

LEFT FRONT INSTRUMENT PANEL SPEAKER (JR27 BASE)

LEFT FRONT INSTRUMENT PANEL SPEAKER (JR27 BASE) - BLACK 3 WAY

CAV	CIRCUIT	FUNCTION
1	X55 20BR/RD	LEFT INSTRUMENT PANEL SPEAKER (-)
1	X55 20BR/RD	LEFT INSTRUMENT PANEL SPEAKER (-)
2	-	-
3	X53 20DG	LEFT INSTRUMENT PANEL SPEAKER (+)
3	X53 20DG	LEFT INSTRUMENT PANEL SPEAKER (+)

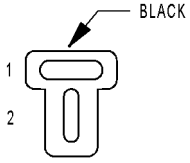

LEFT FRONT INSTRUMENT PANEL SPEAKER (JR27 PREMIUM)

LEFT FRONT INSTRUMENT PANEL SPEAKER (JR27 PREMIUM) - BLACK 2 WAY

CAV	CIRCUIT	FUNCTION
1	X81 18YL/BK	AMPLIFIED LEFT INSTRUMENT PANEL SPEAKER (-)
2	X83 18YL/RD	AMPLIFIED LEFT INSTRUMENT PANEL SPEAKER (+)

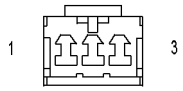

LEFT FRONT INSTRUMENT PANEL SPEAKER (JR41 PREMIUM)

LEFT FRONT INSTRUMENT PANEL SPEAKER (JR41 PREMIUM) - 3 WAY

CAV	CIRCUIT	FUNCTION
1	X81 18YL/BK	AMPLIFIED LEFT INSTRUMENT PANEL SPEAKER (-)
2	-	-
3	X83 18YL/RD	AMPLIFIED LEFT INSTRUMENT PANEL SPEAKER (+)

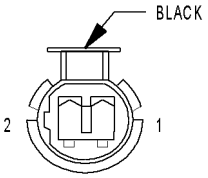

LEFT FRONT WHEEL SPEED SENSOR

LEFT FRONT WHEEL SPEED SENSOR - BLACK 2 WAY

CAV	CIRCUIT	FUNCTION
1	B9 20RD	LEFT FRONT WHEEL SPEED SENSOR 12 VOLT SUPPLY
2	B8 18RD/DB	LEFT FRONT WHEEL SPEED SENSOR SIGNAL

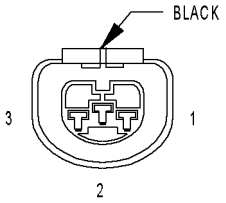

LEFT HEADLAMP (EXCEPT EXPORT)

LEFT HEADLAMP (EXCEPT EXPORT) - BLACK 3 WAY

CAV	CIRCUIT	FUNCTION
1	L43 18VT	FUSED LEFT LOW BEAM OUTPUT
2	Z141 20BK	GROUND
3	L33 20LG/BR	FUSED LEFT HIGH BEAM OUTPUT

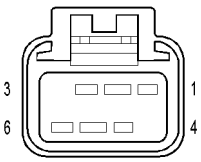

LEFT LAVALIER MODULE (EXPORT)

LEFT LAVALIER MODULE (EXPORT) - 6 WAY

CAV	CIRCUIT	FUNCTION
1	Z163 16BK	GROUND
2	L101 18RD	HEADLAMP ADJUST SIGNAL
3	L33 20LG/BR	FUSED LEFT HIGH BEAM OUTPUT
4	L61 16LG	LEFT TURN SIGNAL
5	L7 20BK/BR	HEADLAMP SWITCH OUTPUT
6	L43 18VT	FUSED LEFT LOW BEAM OUTPUT

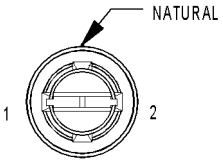

LEFT LICENSE LAMP (JR27)

LEFT LICENSE LAMP (JR27) - NATURAL 2 WAY

CAV	CIRCUIT	FUNCTION
1	L7 18BK/YL	HEADLAMP SWITCH OUTPUT
2	Z149 18BK	GROUND

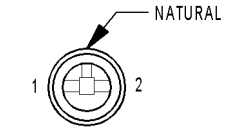

LEFT LICENSE LAMP (JR41 EXPORT)

LEFT LICENSE LAMP (JR41 EXPORT) - NATURAL 2 WAY

CAV	CIRCUIT	FUNCTION
1	L7 18BK/YL	HEADLAMP SWITCH OUTPUT
2	Z150 18BK	GROUND

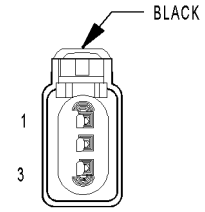

LEFT PARK/ TURN SIGNAL LAMP

LEFT PARK/TURN SIGNAL LAMP - BLACK 3 WAY

CAV	CIRCUIT	FUNCTION
1	L61 16LG	LEFT TURN SIGNAL
2	L7 20BK/BR	HEADLAMP SWITCH OUTPUT
3	Z148 20BK	GROUND

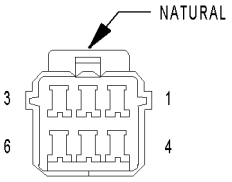

LEFT POWER MIRROR

LEFT POWER MIRROR - NATURAL 6 WAY

CAV	CIRCUIT	FUNCTION
1	P95 22DB/WT (JR27)	LEFT MIRROR HORIZONTAL
1	C16 20LB/YL (JR41)	FUSED REAR WINDOW DEFOGGER RELAY OUTPUT
2	Z314 20BK (JR27)	GROUND
2	Z3 20BK (JR41)	GROUND
3	C16 20LB/YL (JR27)	FUSED REAR WINDOW DEFOGGER RELAY OUTPUT
3	P95 22DB/WT (JR41)	LEFT MIRROR HORIZONTAL
4	P91 22WT/BK	LEFT/RIGHT MIRROR HORIZONTAL SUPPLY
5	P91 22WT/BK (JR27)	LEFT/RIGHT MIRROR VERTICAL SUPPLY
6	P93 22YL/BK	LEFT MIRROR VERTICAL

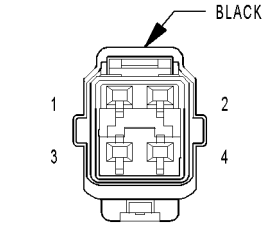

LEFT REAR DOOR LOCK MOTOR/ AJAR SWITCH (JR41)

LEFT REAR DOOR LOCK MOTOR/AJAR SWITCH (JR41) - BLACK 4 WAY

CAV	CIRCUIT	FUNCTION
1	G77 20TN/YL	LEFT REAR DOOR AJAR SWITCH SENSE
2	Z317 18BK	GROUND
3	P181 18PK/DB	LEFT REAR UNLOCK RELAY OUTPUT
4	P179 18OR/TN	LEFT REAR LOCK RELAY OUTPUT

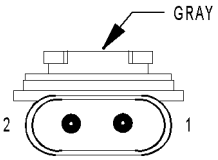

LEFT REAR FOG LAMP (JR27 EXPORT)

LEFT REAR FOG LAMP (JR27 EXPORT) - GRAY 2 WAY

CAV	CIRCUIT	FUNCTION
1	Z149 18BK	GROUND
2	L36 18LG	REAR FOG LAMP CONTROL

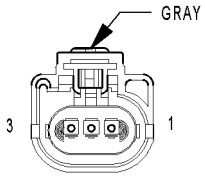

LEFT REAR FOG LAMP (JR41 EXPORT)

LEFT REAR FOG LAMP (JR41 EXPORT) - GRAY 3 WAY

CAV	CIRCUIT	FUNCTION
1	Z150 18BK	GROUND
2	-	-
3	L36 18LG	REAR FOG LAMP CONTROL

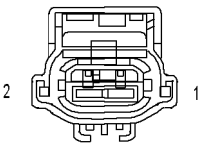

LEFT REAR POWER WINDOW MOTOR

LEFT REAR POWER WINDOW MOTOR - 2 WAY

CAV	CIRCUIT	FUNCTION
1	Q23 14RD/WT (JR27)	POWER WINDOW LEFT REAR B(+) DOWN
1	Q23 14DG (JR41)	POWER WINDOW LEFT REAR B(+) DOWN
2	Q13 14DB (JR27)	POWER WINDOW LEFT REAR B(+) UP
2	Q13 14GY (JR41)	POWER WINDOW LEFT REAR B(+) UP

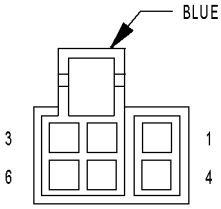

LEFT REAR POWER WINDOW SWITCH (JR41)

LEFT REAR POWER WINDOW SWITCH (JR41) - BLUE 6 WAY

CAV	CIRCUIT	FUNCTION
1	Q24 14DG	POWER WINDOW LEFT REAR B(+) DOWN
2	Q17 14GY/BK	LEFT REAR POWER WINDOW DRIVER (UP)
3	-	-
4	Q27 14DG/WT	MASTER POWER WINDOW SWITCH LEFT REAR (DOWN)
5	Q13 14GY	POWER WINDOW LEFT REAR B(+) UP
6	Q1 14YL	POWER WINDOW SWITCH FEED

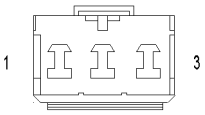

LEFT REAR SPEAKER

LEFT REAR SPEAKER - 3 WAY

CAV	CIRCUIT	FUNCTION
1	X91 18WT/BK (BASE)	LEFT REAR SPEAKER (-)
1	X91 18WT/BK (PREMIUM)	AMPLIFIED LEFT REAR SPEAKER (-)
2	-	-
3	X93 18WT/RD (BASE)	LEFT REAR SPEAKER (+)
3	X93 18WT/RD (PREMIUM)	AMPLIFIED LEFT REAR SPEAKER (+)

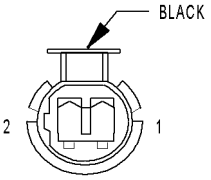

LEFT REAR WHEEL SPEED SENSOR

LEFT REAR WHEEL SPEED SENSOR - BLACK 2 WAY

CAV	CIRCUIT	FUNCTION
1	B4 20LG	LEFT REAR WHEEL SPEED SENSOR 12 VOLT SUPPLY
2	B3 20LG/DB	LEFT REAR WHEEL SPEED SENSOR SIGNAL

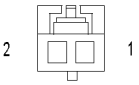

LEFT REMOTE RADIO SWITCH (2.7L)

LEFT REMOTE RADIO SWITCH (2.7L) - 2 WAY

CAV	CIRCUIT	FUNCTION
1	X3 22BK/RD	HORN/RADIO CONTROL MUX
2	Z123 22BK/OR	GROUND

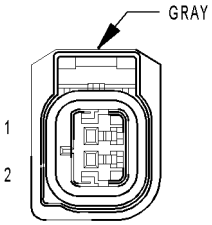

LEFT SIDE IMPACT SENSOR 1

LEFT SIDE IMPACT SENSOR 1 - GRAY 2 WAY

CAV	CIRCUIT	FUNCTION
1	R15 20LG/BR	LEFT SIDE IMPACT SENSOR 1 GROUND
2	R13 20LG/TN	LEFT SIDE IMPACT SENSOR 1 SIGNAL

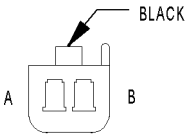

LEFT SPEED CONTROL SWITCH

LEFT SPEED CONTROL SWITCH - BLACK 2 WAY

CAV	CIRCUIT	FUNCTION
A	V37 22RD/LG (2.0L/2.4L)	S/C SWITCH SIGNAL
A	V37 22RD/LG (2.7L)	SPEED CONTROL SWITCH SIGNAL
B	Z123 22BK/LB	GROUND

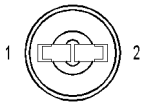

LEFT TAIL/SIDE MARKER LAMP

LEFT TAIL/SIDE MARKER LAMP - 2 WAY

CAV	CIRCUIT	FUNCTION
1	Z149 18BK (JR27)	GROUND
1	Z150 18BK (JR41)	GROUND
2	L7 18BK/YL	HEADLAMP SWITCH OUTPUT

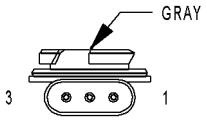

LEFT TAIL/STOP LAMP

LEFT TAIL/STOP LAMP - GRAY 3 WAY

CAV	CIRCUIT	FUNCTION
1	Z149 18BK (JR27)	GROUND
1	Z150 18BK (JR41)	GROUND
2	L7 18BK/YL	HEADLAMP SWITCH OUTPUT
3	L50 18WT/TN	BRAKE LAMP SWITCH OUTPUT

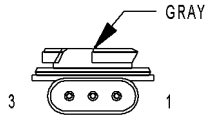

LEFT TAIL/ TURN SIGNAL LAMP (JR41 DODGE)

LEFT TAIL/TURN SIGNAL LAMP (JR41 DODGE) - GRAY 3 WAY

CAV	CIRCUIT	FUNCTION
1	Z150 18BK	GROUND
2	L7 18BK/YL	HEADLAMP SWITCH OUTPUT
3	L61 18LG	LEFT TURN SIGNAL

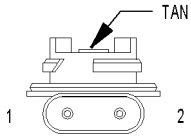

LEFT TURN LAMP (CHRYSLER/EXCEPT JR41 DODGE)

LEFT TURN LAMP (CHRYSLER/EXCEPT JR41 DODGE) - TAN 2 WAY

CAV	CIRCUIT	FUNCTION
1	L61 18LG	LEFT TURN SIGNAL
2	Z149 18BK (JR27)	GROUND
2	Z150 18BK (JR41)	GROUND

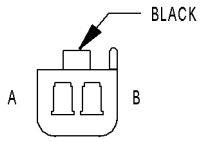

LEFT VISOR/ VANITY LAMPS

LEFT VISOR/VANITY LAMPS - BLACK 2 WAY

CAV	CIRCUIT	FUNCTION
A	M1 18PK (JR27)	FUSED B(+)
A	M1 20PK (JR41)	FUSED B(+)
B	G38 18GY (JR27)	GARAGE DOOR OPENER ENABLE
B	Z312 20BK (JR41)	GROUND

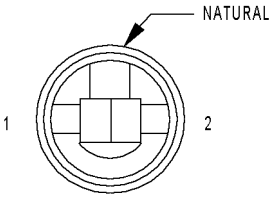

LICENSE LAMP (JR41 EXCEPT EXPORT)

LICENSE LAMP (JR41 EXCEPT EXPORT) - NATURAL 2 WAY

CAV	CIRCUIT	FUNCTION
1	L7 18BK/YL	HEADLAMP SWITCH OUTPUT
2	Z150 18BK	GROUND

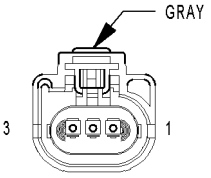

MANIFOLD ABSOLUTE PRESSURE SENSOR (2.0L/2.4L)

MANIFOLD ABSOLUTE PRESSURE SENSOR (2.0L/2.4L) - GRAY 3 WAY

CAV	CIRCUIT	FUNCTION
1	K1 20DG/RD	MAP SIGNAL
2	K4 20BK/LB	SENSOR GROUND 1
3	K6 20VT/WT	5 VOLT SUPPLY

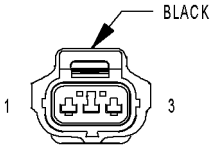

MANIFOLD ABSOLUTE PRESSURE SENSOR (2.7L)

MANIFOLD ABSOLUTE PRESSURE SENSOR (2.7L) - BLACK 3 WAY

CAV	CIRCUIT	FUNCTION
1	K6 20VT/WT	5 VOLT SUPPLY
2	K4 20BK/LB	SENSOR GROUND 1
3	K1 20DG/RD	MAP SENSOR SIGNAL

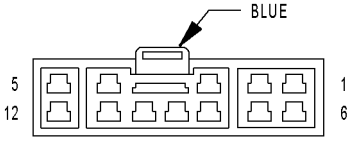

MASTER POWER WINDOW SWITCH

MASTER POWER WINDOW SWITCH - BLUE 12 WAY

CAV	CIRCUIT	FUNCTION
1	F21 14TN	FUSED IGNITION SWITCH OUTPUT (RUN)
2	Q17 14DB/WT	LEFT REAR POWER WINDOW DRIVER (UP)
3	Y96 14LG (JR27)	MASTER POWER WINDOW SWITCH LEFT REAR (DOWN)
3	Q27 14RD/BK (JR41)	MASTER POWER WINDOW SWITCH LEFT REAR (DOWN)
4	Q18 14GY/BK	RIGHT REAR POWER WINDOW DRIVER (UP)
5	Q1 14YL (JR41)	POWER WINDOW SWITCH FEED
6	-	-
7	Q11 14LB (JR27)	LEFT FRONT POWER WINDOW DRIVER (UP)
7	Q11 16LB (JR41)	LEFT FRONT POWER WINDOW DRIVER (UP)
8	Y94 14OR/WT (JR27)	MASTER POWER WINDOW SWITCH LEFT FRONT (DOWN)
8	Q21 16WT (JR41)	MASTER POWER WINDOW SWITCH LEFT FRONT (DOWN)
9	Y97 14VT (JR27)	MASTER POWER WINDOW SWITCH RIGHT REAR (DOWN)
9	Q28 14DG/WT (JR41)	MASTER POWER WINDOW SWITCH RIGHT REAR (DOWN)
10	Z314 14BK	GROUND
11	Y95 14PK (JR27)	MASTER POWER WINDOW SWITCH RIGHT FRONT (DOWN)
11	Q26 14VT/WT (JR41)	MASTER POWER WINDOW SWITCH RIGHT FRONT (DOWN)
12	Q16 14BR/WT	MASTER POWER WINDOW SWITCH RIGHT FRONT (UP)

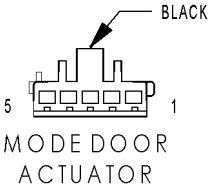

MODE DOOR ACTUATOR - BLACK 5 WAY

CAV	CIRCUIT	FUNCTION
1	C35 20DG/YL	MODE DOOR DRIVER
2	C57 20DB/GY	SENSOR GROUND
3	C37 20YL	MODE DOOR FEEDBACK SIGNAL
4	C26 20PK/DB	5V SUPPLY
5	C34 20DB/WT	COMMON DOOR DRIVER

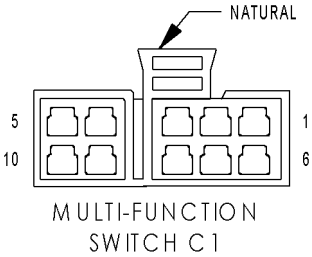

MULTI-FUNCTION SWITCH C1 - NATURAL 10 WAY

CAV	CIRCUIT	FUNCTION
1	L61 20LG	LEFT TURN SIGNAL
2	L60 16TN	RIGHT TURN SIGNAL
3	V10 18BR	FRONT WASHER PUMP MOTOR CONTROL
4	V52 20DG/RD	FRONT WIPER SWITCH MUX
5	Z234 16BK (BASE)	GROUND
5	Z997 16BK (PREMIUM)	GROUND
6	-	-
7	-	-
8	A15 16PK (BASE/EXPORT)	FUSED B(+)
8	A15 16PK/LB (PREMIUM)	FUSED B(+)
9	F13 18DB	FUSED IGNITION SWITCH OUTPUT (RUN-ACC)
9	F13 18DB (JR27)	FUSED IGNITION SWITCH OUTPUT (RUN-ACC)
10	-	-

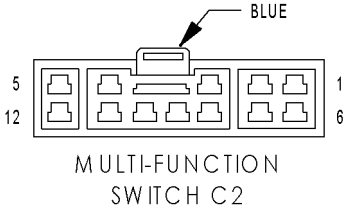

MULTI-FUNCTION SWITCH C2 - BLUE 12 WAY

CAV	CIRCUIT	FUNCTION
1	L4 16VT/WT (EXCEPT PREMIUM)	DIMMER SWITCH LOW BEAM OUTPUT
1	L309 20WT/OR (PREMIUM)	AUTO HEADLAMP RELAY OUTPUT
2	L4 16VT/WT	DIMMER SWITCH LOW BEAM OUTPUT
3	L3 14RD/OR	DIMMER SWITCH HIGH BEAM OUTPUT
4	A3 16RD/WT	FUSED B(+)
5	A3 16RD/WT	FUSED B(+)
6	L7 16BK/YL	HEADLAMP SWITCH OUTPUT
7	F33 16PK/RD	FUSED B(+)
8	E19 20RD	PANEL LAMPS DIMMER SIGNAL
9	C57 20DB/GY	SENSOR GROUND
10	L36 18LG (JR27 BASE/EXPORT)	REAR FOG LAMP CONTROL
10	L109 20WT (PREMIUM)	FUSED IGNITION SWITCH OUTPUT
11	L44 20VT/RD (BASE)	FUSED RIGHT LOW BEAM OUTPUT
11	L25 20BR (EXPORT)	FUSED FOG LAMP SWITCH FEED
11	F33 18PK/RD (PREMIUM)	FUSED B(+)
12	L39 20LB/WT (EXCEPT PREMIUM)	FRONT FOG LAMP INDICATOR DRIVER
12	L35 20BR/WT (PREMIUM)	FOG LAMP SWITCH OUTPUT

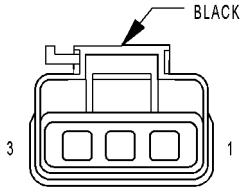

NATURAL VACUUM LEAK DETECTION ASSEMBLY (2.4L EXCEPT EXPORT)

NATURAL VACUUM LEAK DETECTION ASSEMBLY (2.4L EXCEPT EXPORT) - BLACK 3 WAY

CAV	CIRCUIT	FUNCTION
1	Z12 20BK	GROUND
2	K107 20OR	NVLD SWITCH SIGNAL
3	K106 20WT/DG	NVLD SOLENOID CONTROL

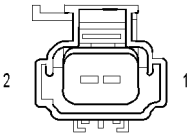

OIL PRESSURE SWITCH

OIL PRESSURE SWITCH - 2 WAY

CAV	CIRCUIT	FUNCTION
1	G6 20GY	ENGINE OIL PRESSURE SWITCH SENSE
2	-	-

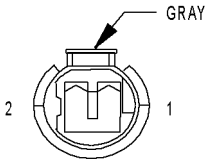

OUTPUT SPEED SENSOR

OUTPUT SPEED SENSOR - GRAY 2 WAY

CAV	CIRCUIT	FUNCTION
1	T13 18DB/BK	SPEED SENSOR GROUND
2	T14 18LG/WT	OUTPUT SPEED SENSOR SIGNAL

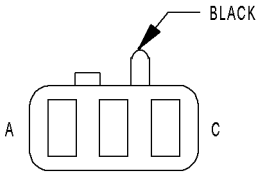

OVERHEAD MAP/ COURTESY LAMPS (JR41)

OVERHEAD MAP/COURTESY LAMPS (JR41) - BLACK 3 WAY

CAV	CIRCUIT	FUNCTION
A	Z312 20BK	GROUND
B	M1 20PK	FUSED B(+)
C	M2 20YL	COURTESY LAMPS DRIVER

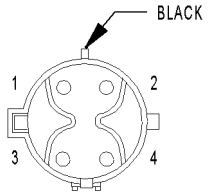

OXYGEN SENSOR 1/1 RIGHT BANK UP (2.7L)

OXYGEN SENSOR 1/1 RIGHT BANK UP (2.7L) - BLACK 4 WAY

CAV	CIRCUIT	FUNCTION
1	Z192 20BK	GROUND
2	F142 18OR/DG	FUSED AUTOMATIC SHUT DOWN RELAY OUTPUT
3	K127 18DB/LG	OXYGEN SENSOR GROUND
4	K41 20BK/DG	OXYGEN SENSOR 1/1 SIGNAL

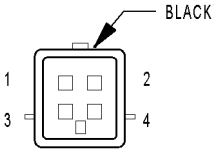

OXYGEN SENSOR 1/1 UPSTREAM (2.0L/2.4L)

OXYGEN SENSOR 1/1 UPSTREAM (2.0L/2.4L) - BLACK 4 WAY

CAV	CIRCUIT	FUNCTION
1	Z228 20BK	GROUND
2	K99 18BR/OR	O2 1/1 HEATER CONTROL
3	K902 18BR/DG	O2 RETURN (UP)
4	K41 20BK/DG	O2 1/1 SIGNAL

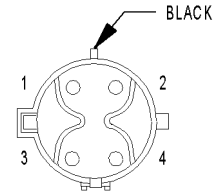

OXYGEN SENSOR 1/2 DOWNSTREAM (2.0L/2.4L)

OXYGEN SENSOR 1/2 DOWNSTREAM (2.0L/2.4L) - BLACK 4 WAY

CAV	CIRCUIT	FUNCTION
1	Z186 20BK	GROUND
2	K199 18BR/VT	O2 1/2 HEATER CONTROL
3	K904 18DB/DG	O2 RETURN (DOWN)
4	K141 20TN/WT	O2 1/2 SIGNAL

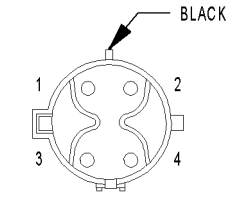

OXYGEN SENSOR 1/2 RIGHT BANK DOWN (2.7L)

OXYGEN SENSOR 1/2 RIGHT BANK DOWN (2.7L) - BLACK 4 WAY

CAV	CIRCUIT	FUNCTION
1	Z188 20BK	GROUND
2	F142 18OR/DG	FUSED AUTOMATIC SHUT DOWN RELAY OUTPUT
3	K127 18DB/LG	OXYGEN SENSOR GROUND
4	K141 20TN/WT	OXYGEN SENSOR 1/2 SIGNAL

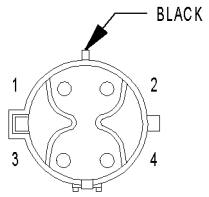

OXYGEN SENSOR 2/1 LEFT BANK UP (2.7L)

OXYGEN SENSOR 2/1 LEFT BANK UP (2.7L) - BLACK 4 WAY

CAV	CIRCUIT	FUNCTION
1	Z193 20BK	GROUND
2	F142 18OR/DG	FUSED AUTOMATIC SHUT DOWN RELAY OUTPUT
3	K127 18DB/LG	OXYGEN SENSOR GROUND
4	K241 20LG/RD	OXYGEN SENSOR 2/1 SIGNAL

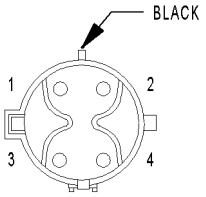

OXYGEN SENSOR 2/2 LEFT BANK DOWN (2.7L)

OXYGEN SENSOR 2/2 LEFT BANK DOWN (2.7L) - BLACK 4 WAY

CAV	CIRCUIT	FUNCTION
1	Z186 20BK	GROUND
2	F142 18OR/DG	FUSED AUTOMATIC SHUT DOWN RELAY OUTPUT
3	K127 18DB/LG	OXYGEN SENSOR GROUND
4	K341 20PK/WT	OXYGEN SENSOR 2/2 SIGNAL

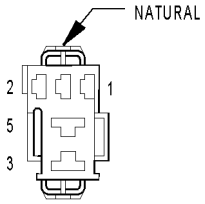

PARK LAMP RELAY (PREMIUM)

PARK LAMP RELAY (PREMIUM) - NATURAL 5 WAY

CAV	CIRCUIT	FUNCTION
1	L177 20WT/OR	PARK LAMP RELAY CONTROL
2	F33 18PK/RD	FUSED B(+)
3	L7 16BK/YL	HEADLAMP SWITCH OUTPUT
4	L7 16BK/YL	HEADLAMP SWITCH OUTPUT
5	F33 20PK/RD	FUSED B(+)

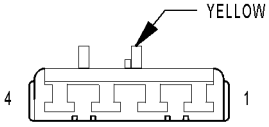

PASSENGER AIRBAG

PASSENGER AIRBAG - YELLOW 4 WAY

CAV	CIRCUIT	FUNCTION
1	R42 20BK/YL	PASSENGER SQUIB 1 LINE 1
2	R44 20DG/YL	PASSENGER SQUIB 1 LINE 2
3	R62 20OR/YL	PASSENGER SQUIB 2 LINE 1
4	R64 20TN/YL	PASSENGER SQUIB 2 LINE 2

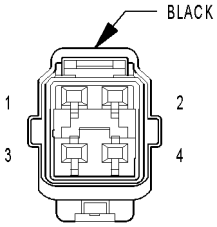

PASSENGER DOOR LOCK MOTOR/ AJAR SWITCH

PASSENGER DOOR LOCK MOTOR/AJAR SWITCH - BLACK 4 WAY

CAV	CIRCUIT	FUNCTION
1	G74 20TN/RD	PASSENGER DOOR AJAR SWITCH SENSE
2	Z315 20BK (JR27)	GROUND
2	Z242 20BK (JR41)	GROUND
3	P178 20PK/LB	PASSENGER UNLOCK RELAY OUTPUT
4	P176 20PK/BK	PASSENGER LOCK RELAY OUTPUT

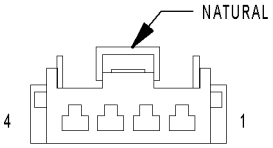

PASSENGER DOOR LOCK SWITCH

PASSENGER DOOR LOCK SWITCH - NATURAL 4 WAY

CAV	CIRCUIT	FUNCTION
1	M1 20PK	FUSED B(+)
2	-	-
3	Z315 20BK	GROUND
4	P96 20WT/LG	PASSENGER DOOR SWITCH MUX

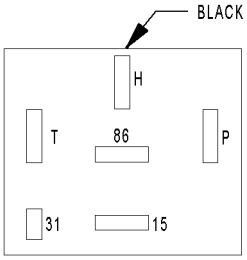

PASSENGER HEATED SEAT MODULE

PASSENGER HEATED SEAT MODULE - BLACK 6 WAY

CAV	CIRCUIT	FUNCTION
15	P86 16PK/BK	HEATED SEAT RELAY OUTPUT
31	Z122 16BK	GROUND
86	F98 20RD/WT	PASSENGER HEATED SEAT FEED
H	-	-
P	P8 20LB/WT	PASSENGER HEATED SEAT SWITCH OUTPUT
T	-	-

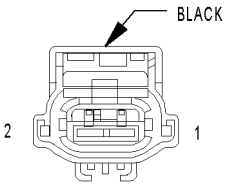

PASSENGER POWER WINDOW MOTOR (JR27)

PASSENGER POWER WINDOW MOTOR (JR27) - BLACK 2 WAY

CAV	CIRCUIT	FUNCTION
1	Q22 14VT	RIGHT FRONT POWER WINDOW DRIVER (DOWN)
2	Q12 14BR	RIGHT FRONT POWER WINDOW DRIVER (UP)

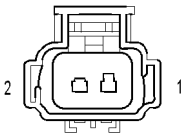

PASSENGER POWER WINDOW MOTOR (JR41)

PASSENGER POWER WINDOW MOTOR (JR41) - 2 WAY

CAV	CIRCUIT	FUNCTION
1	Q22 16VT	RIGHT FRONT WINDOW DRIVER (DOWN)
2	Q12 16BR	RIGHT FRONT WINDOW DRIVER (UP)

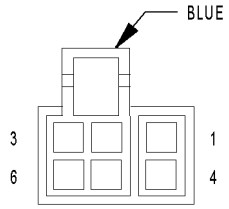

PASSENGER POWER WINDOW SWITCH

PASSENGER POWER WINDOW SWITCH - BLUE 6 WAY

CAV	CIRCUIT	FUNCTION
1	Q22 14VT (JR27)	RIGHT FRONT POWER WINDOW DRIVER (DOWN)
1	Q22 16VT (JR41)	RIGHT FRONT POWER WINDOW DRIVER (DOWN)
2	Q16 14BR/WT	MASTER POWER WINDOW SWITCH RIGHT FRONT (UP)
3	-	-
4	Q26 14VT/WT	MASTER POWER WINDOW SWITCH RIGHT FRONT (DOWN)
5	Q12 14BR (JR27)	RIGHT FRONT POWER WINDOW DRIVER (UP)
5	Q12 16BR (JR41)	RIGHT FRONT POWER WINDOW DRIVER (UP)
6	F21 14TN (JR27)	FUSED IGNITION SWITCH OUTPUT (RUN)
6	Q1 14YL (JR41)	POWER WINDOW SWITCH FEED

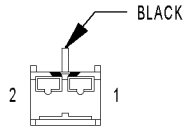

PASSENGER SEAT BELT SOLENOID (JR27)

PASSENGER SEAT BELT SOLENOID (JR27) - BLACK 2 WAY

CAV	CIRCUIT	FUNCTION
1	R8 18OR/RD	PASSENGER SEAT BELT SOLENOID CONTROL
2	Z219 18BK	GROUND

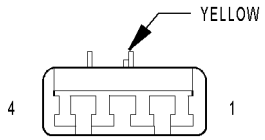

PASSENGER SEAT BELT TENSIONER (JR27)

PASSENGER SEAT BELT TENSIONER (JR27) - YELLOW 4 WAY

CAV	CIRCUIT	FUNCTION
1	-	-
2	-	-
3	R54 20LB/YL	PASSENGER SEAT BELT TENSIONER LINE 2
4	R56 20LB/DG	PASSENGER SEAT BELT TENSIONER LINE 1

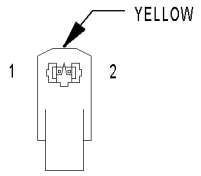

PASSENGER SEAT BELT TENSIONER (JR41)

PASSENGER SEAT BELT TENSIONER (JR41) - YELLOW 2 WAY

CAV	CIRCUIT	FUNCTION
1	R54 18LB/YL	PASSENGER SEAT BELT TENSIONER LINE 2
2	R56 18LB/DG	PASSENGER SEAT BELT TENSIONER LINE 1

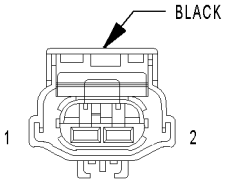

PCV HEATER (2.7L)

PCV HEATER (2.7L) - BLACK 2 WAY

CAV	CIRCUIT	FUNCTION
1	F142 18OR/DG	FUSED AUTOMATIC SHUT DOWN RELAY OUTPUT
2	Z194 18BK	GROUND

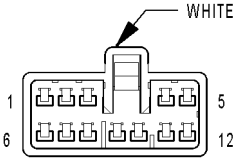

POWER AMPLIFIER C1 (JR27 PREMIUM)

POWER AMPLIFIER C1 (JR27 PREMIUM) - WHITE 12 WAY

CAV	CIRCUIT	FUNCTION
1	X82 18LB/VT	AMPLIFIED RIGHT FRONT SPEAKER (+)
2	X87 18LG/VT	AMPLIFIED LEFT FRONT SPEAKER (+)
3	X92 20TN/BK	AMPLIFIED RIGHT REAR SPEAKER (-)
4	X86 18OR/RD	AMPLIFIED RIGHT INSTRUMENT PANEL SPEAKER (+)
5	X83 18YL/RD	AMPLIFIED LEFT INSTRUMENT PANEL SPEAKER (+)
6	X80 18LB/BK	AMPLIFIED RIGHT FRONT SPEAKER (-)
7	X85 18LG/BK	AMPLIFIED LEFT FRONT SPEAKER (-)
8	X94 20TN/VT	AMPLIFIED RIGHT REAR SPEAKER (+)
9	X93 20WT/RD	AMPLIFIED LEFT REAR SPEAKER (+)
10	X91 20WT/BK	AMPLIFIED LEFT REAR SPEAKER (-)
11	X84 18OR/BK	AMPLIFIED RIGHT INSTRUMENT PANEL SPEAKER (-)
12	X81 18YL/BK	AMPLIFIED LEFT INSTRUMENT PANEL SPEAKER (-)

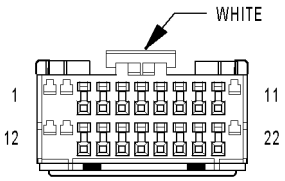

POWER AMPLIFIER C1 (JR41 PREMIUM)

POWER AMPLIFIER C1 (JR41 PREMIUM) - WHITE 22 WAY

CAV	CIRCUIT	FUNCTION
1	F75 16VT	FUSED B(+)
2	Z115 16BK/RD	GROUND
3	X60 20DG/RD	RADIO 12V OUTPUT
4	X54 20VT	RIGHT FRONT SPEAKER (+)
5	X53 20DG	LEFT FRONT SPEAKER (+)
6	X52 20DB/WT	RIGHT REAR SPEAKER (+)
7	X51 20BR/YL	LEFT REAR SPEAKER (+)
8	-	-
9	-	-
10	X93 20WT/RD	AMPLIFIED LEFT REAR SPEAKER (+)
11	X94 20TN/VT	AMPLIFIED RIGHT REAR SPEAKER (+)
12	F75 16VT	FUSED B(+)
13	Z126 16BK/LG	GROUND
14	-	-
15	X56 20DB/RD	RIGHT FRONT SPEAKER (-)
16	X55 20BR/RD	LEFT FRONT SPEAKER (-)
17	X58 20DB/OR	RIGHT REAR SPEAKER (-)
18	X57 20BR/LB	LEFT REAR SPEAKER (-)
19	-	-
20	-	-
21	X91 20WT/BK	AMPLIFIED LEFT REAR SPEAKER (-)
22	X92 20TN/BK	AMPLIFIED RIGHT REAR SPEAKER (-)

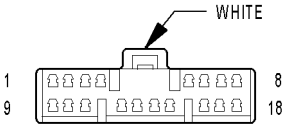

POWER AMPLIFIER C2 (JR27 PREMIUM)

POWER AMPLIFIER C2 (JR27 PREMIUM) - WHITE 18 WAY

CAV	CIRCUIT	FUNCTION
1	F75 16VT	FUSED B(+)
2	-	-
3	-	-
4	-	-
5	X52 20DB/WT	RIGHT REAR SPEAKER (+)
6	X51 20BR/YL	LEFT REAR SPEAKER (+)
7	X54 20VT	RIGHT FRONT SPEAKER (+)
8	X53 20DG	LEFT FRONT SPEAKER (+)
9	Z115 16BK/RD	GROUND
10	-	-
11	-	-
12	-	-
13	-	-
14	X60 20DG/RD	RADIO 12V OUTPUT
15	X58 20DB/OR	RIGHT REAR SPEAKER (-)
16	X57 20BR/LB	LEFT REAR SPEAKER (-)
17	X56 20DB/RD	RIGHT FRONT SPEAKER (-)
18	X55 20BR/RD	LEFT FRONT SPEAKER (-)

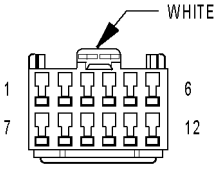

POWER AMPLIFIER C2 (JR41 PREMIUM)

POWER AMPLIFIER C2 (JR41 PREMIUM) - WHITE 12 WAY

CAV	CIRCUIT	FUNCTION
1	X87 18LG/VT	AMPLIFIED LEFT FRONT SPEAKER (+)
2	X82 18LB/VT	AMPLIFIED RIGHT FRONT SPEAKER (+)
3	X83 18YL/RD	AMPLIFIED LEFT INSTRUMENT PANEL SPEAKER (+)
4	X86 18OR/RD	AMPLIFIED RIGHT INSTRUMENT PANEL SPEAKER (+)
5	-	-
6	-	-
7	X85 18LG/DG	AMPLIFIED LEFT FRONT SPEAKER (-)
8	X80 18LB/BK	AMPLIFIED RIGHT FRONT SPEAKER (-)
9	X81 18YL/BK	AMPLIFIED LEFT INSTRUMENT PANEL SPEAKER (-)
10	X84 18OR/BK	AMPLIFIED RIGHT INSTRUMENT PANEL SPEAKER (-)
11	-	-
12	-	-

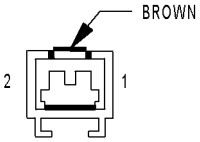

POWER ANTENNA (EXPORT)

POWER ANTENNA (EXPORT) - BROWN 2 WAY

CAV	CIRCUIT	FUNCTION
1	M1 18PK	FUSED B(+)
2	X60 20DG/RD	RADIO 12V OUTPUT

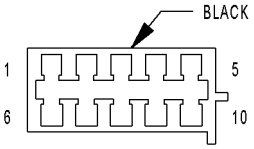

POWER MIRROR SWITCH

POWER MIRROR SWITCH - BLACK 10 WAY

CAV	CIRCUIT	FUNCTION
1	P91 22WT/BK	LEFT/RIGHT MIRROR HORIZONTAL SUPPLY
2	P94 22WT/YL	RIGHT MIRROR HORIZONTAL
3	Z239 20BK/LB	GROUND
4	P93 22YL/BK	LEFT MIRROR VERTICAL
5	-	-
6	-	-
7	M1 18PK	FUSED B(+)
8	P95 22DB	LEFT MIRROR HORIZONTAL
9	P92 22YL	RIGHT MIRROR VERTICAL
10	P90 22LG/BK	RIGHT POWER MIRROR SUPPLY

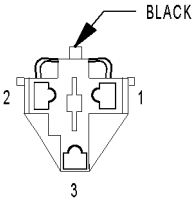

POWER OUTLET (JR27/JR41 EXPORT)

POWER OUTLET (JR27/JR41 EXPORT) - BLACK 3 WAY

CAV	CIRCUIT	FUNCTION
1	F30 18RD	FUSED B(+)
2	-	-
3	Z316 18BK/WT	GROUND

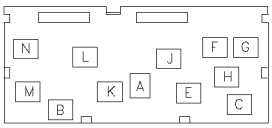

POWER SEAT SWITCH (JR27)

POWER SEAT SWITCH (JR27) - 12 WAY

CAV	CIRCUIT	FUNCTION
A	F35 16RD	FUSED B(+)
B	Z1 16BK	GROUND
C	-	-
E	P21 18RD/LG	LEFT SEAT FRONT UP
F	-	-
G	-	-
H	-	-
J	P19 18YL/LG	LEFT SEAT FRONT DOWN
K	P15 18YL/LB	LEFT SEAT HORIZONTAL FORWARD
L	P17 18RD/LB	LEFT SEAT HORIZONTAL REARWARD
M	P13 18RD/WT	LEFT SEAT REAR UP
N	P11 18YL/WT	LEFT SEAT REAR DOWN

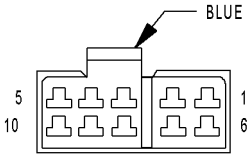

POWER SEAT SWITCH (JR41)

POWER SEAT SWITCH (JR41) - BLUE 10 WAY

CAV	CIRCUIT	FUNCTION
1	F35 16RD	FUSED B(+)
2	P43 18GY/LB	LEFT SEAT RECLINER SWITCH DOWN
3	P17 18RD/LB	LEFT SEAT HORIZONTAL FORWARD
4	P41 18GY/WT	LEFT SEAT RECLINER SWITCH UP
5	Z1 16BK	GROUND
6	P21 18RD/LG	LEFT SEAT FRONT DOWN
7	P13 18RD/WT	LEFT SEAT REAR DOWN
8	P11 18YL/WT	LEFT SEAT REAR UP
9	P19 18YL/LG	LEFT SEAT FRONT UP
10	P15 18YL/LB	LEFT SEAT HORIZONTAL REARWARD

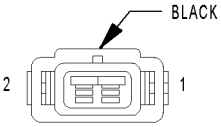

POWER STEERING PRESSURE SWITCH (2.0L)

POWER STEERING PRESSURE SWITCH (2.0L) - BLACK 2 WAY

CAV	CIRCUIT	FUNCTION
1	K10 20DB/LG	POWER STEERING PRESSURE SWITCH SENSE
2	Z244 20BK	GROUND

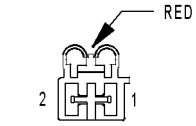

POWER TOP PUMP MOTOR (JR27)

POWER TOP PUMP MOTOR (JR27) - RED 2 WAY

CAV	CIRCUIT	FUNCTION
1	P3 12YL	TOP UP RELAY OUTPUT
2	P4 12RD	TOP DOWN RELAY OUTPUT

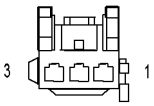

POWER TOP SWITCH (JR27)

POWER TOP SWITCH (JR27) - 3 WAY

CAV	CIRCUIT	FUNCTION
1	F20 20YL/BK	FUSED IGNITION SWITCH OUTPUT (RUN)
2	Z249 20BK	GROUND
3	Y102 20WT	CONVERTIBLE TOP SWITCH MUX

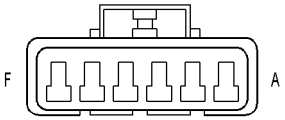

POWER TOP UP/DOWN RELAYS (JR27)

POWER TOP UP/DOWN RELAYS - 6 WAY

CAV	CIRCUIT	FUNCTION
A	P6 20RD/WT	TOP UP RELAY CONTROL
B	P3 12YL	TOP UP RELAY OUTPUT
C	A25 12DB	FUSED B(+)
D	Z253 12BK	GROUND
E	P4 12RD	TOP DOWN RELAY OUTPUT
F	P5 20YL/BK	TOP DOWN RELAY CONTROL

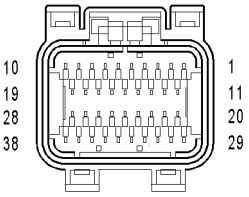

POWERTRAIN CONTROL MODULE C1 (NGC)

POWERTRAIN CONTROL MODULE C1 - 38 WAY

CAV	CIRCUIT	FUNCTION
1	-	-
2	-	-
3	-	-
4	-	-
5	-	-
6	-	-
7	-	-
8	-	-
9	Z12 16BK/TN	GROUND
10	-	-
11	F12 18DB/WT	FUSED IGNITION SWITCH OUTPUT (RUN-START)
12	F11 18RD/WT	FUSED IGNITION SWITCH OUTPUT (OFF-RUN-START)
13	G7 18WT/OR (MTX)	VEHICLE SPEED SIGNAL
14	-	-
15	-	-
16	-	-
17	-	-
18	Z12 16BK/TN	GROUND
19	-	-
20	-	-
21	C18 20DB	A/C PRESSURE SIGNAL
22	-	-
23	-	-
24	-	-
25	D20 20LG	SCI RECEIVE (PCM)
26	D6 20PK/LB (EATX)	SCI RECEIVE (TCM)
27	K7 18OR (MTX)	5 VOLT SUPPLY
28	-	-
29	A14 16RD/TN	FUSED B(+)
30	A41 16YL	FUSED IGNITION SWITCH OUTPUT (START)
31	-	-
32	K904 18DB/DG	O2 RETURN (DOWN)
33	-	-
34	-	-
35	-	-
36	D21 20PK	SCI TRANSMIT (PCM)
37	D15 20WT/DG (EATX)	SCI TRANSMIT (TCM)
38	D25 20YL/VT (EATX)	PCI BUS (PCM)
38	D25 20OR (MTX)	PCI BUS (PCM)

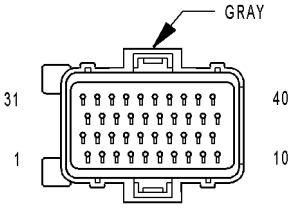

POWERTRAIN CONTROL MODULE C1 (SBEC)

POWERTRAIN CONTROL MODULE C1 (SBEC) - GRAY 40 WAY

CAV	CIRCUIT	FUNCTION
1	K94 18TN/LG	COIL ON PLUG DRIVER NO. 4
2	K93 18TN/OR	COIL ON PLUG DRIVER NO. 3
3	K92 18TN/PK	COIL ON PLUG DRIVER NO. 2
4	K96 18TN/LB	COIL ON PLUG DRIVER NO. 6
5	V32 20YL/RD	SPEED CONTROL POWER SUPPLY
6	A142 14DG/OR	AUTOMATIC SHUT DOWN RELAY OUTPUT
7	K13 18YL/WT	FUEL INJECTOR NO. 3 DRIVER
8	K20 18DG	GENERATOR FIELD DRIVER
9	-	-
10	Z108 16BK/TN	GROUND
11	K91 18TN/RD	COIL ON PLUG DRIVER NO. 1
12	-	-
13	K11 18WT/DB	FUEL INJECTOR NO. 1 DRIVER
14	K58 18BR/DB	FUEL INJECTOR NO. 6 DRIVER
15	K38 18GY	FUEL INJECTOR NO. 5 DRIVER
16	K14 18LB/BR	FUEL INJECTOR NO. 4 DRIVER
17	K12 18TN	FUEL INJECTOR NO. 2 DRIVER
18	-	-
19	-	-
20	F12 18DB/WT	FUSED IGNITION SWITCH OUTPUT (RUN-START)
21	K95 18TN/DG	COIL ON PLUG DRIVER NO. 5
22	-	-
23	-	-
24	-	-
25	K42 18DB/LG	KNOCK SENSOR SIGNAL
26	K2 20TN/BK	ENGINE COOLANT TEMPERATURE SENSOR SIGNAL
27	K127 18DB/LG	OXYGEN SENSOR GROUND
28	-	-
29	K241 20LG/RD	OXYGEN SENSOR 2/1 SIGNAL
30	K41 20BK/DG	OXYGEN SENSOR 1/1 SIGNAL
31	K90 20TN	STARTER RELAY CONTROL
32	K24 20GY/BK	CRANKSHAFT POSITION SENSOR SIGNAL
33	K44 20TN/YL	CAMSHAFT POSITION SENSOR SIGNAL
34	-	-
35	K22 20OR/DB	THROTTLE POSITION SENSOR SIGNAL
36	K1 20DG/RD	MAP SENSOR SIGNAL
37	K21 20BK/RD	INLET AIR TEMPERATURE SENSOR SIGNAL
38	-	-
39	-	-
40	-	-

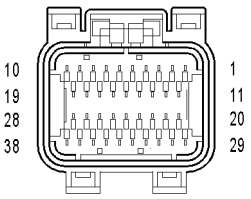

POWERTRAIN CONTROL MODULE C2 (NGC)

POWERTRAIN CONTROL MODULE C2 (NGC) - 38 WAY

CAV	CIRCUIT	FUNCTION
1	-	-
2	-	-
3	-	-
4	-	-
5	-	-
6	-	-
7	-	-
8	-	-
9	K17 18DB/TN	COIL CONTROL NO. 2
10	K19 18BK/GY	COIL CONTROL NO. 1
11	K14 18LB/BR	INJECTOR CONTROL NO. 4
12	K13 18YL/WT	INJECTOR CONTROL NO. 3
13	K12 18TN	INJECTOR CONTROL NO. 2
14	K11 18WT/DB	INJECTOR CONTROL NO. 1
15	-	-
16	-	-
17	K199 18BR/VT	O2 1/2 HEATER CONTROL
18	K99 18BR/OR	O2 1/1 HEATER CONTROL
19	K20 18DG	GEN FIELD CONTROL
20	K2 20TN/BK	ECT SIGNAL
21	K22 20OR/DB	TP SIGNAL
22	-	-
23	K1 20DG/RD	MAP SIGNAL
24	K45 20BK/VT	KS RETURN
25	K42 20DB/LG	KS SIGNAL
26	-	-
27	K4 20BK/LB	SENSOR GROUND 1
28	K60 18YL/BK	IAC RETURN
29	K6 20VT/WT	5 VOLT SUPPLY
30	K21 20BK/RD	IAT SIGNAL
31	K41 20BK/DG	O2 1/1 SIGNAL
32	K902 18BR/DG	O2 RETURN (UP)
33	K141 20TN/WT	O2 1/2 SIGNAL
34	K44 20TN/YL	CMP SIGNAL
35	K24 20GY/BK	CKP SIGNAL
36	-	-
37	-	-
38	K39 18GY/RD	IAC MOTOR CONTROL

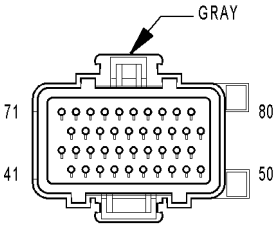

POWERTRAIN CONTROL MODULE C2 (SBEC)

POWERTRAIN CONTROL MODULE C2 (SBEC) - GRAY 40 WAY

CAV	CIRCUIT	FUNCTION
41	V37 20PK/LG	SPEED CONTROL SWITCH SIGNAL
42	C18 20DB	A/C PRESSURE SIGNAL
43	K4 18BK/LB	SENSOR GROUND 1
44	K7 18OR/WT	8 VOLT SUPPLY
45	-	-
46	A14 14RD/TN	FUSED B(+)
47	Z109 16BK	GROUND
48	K40 20BR/WT	IDLE AIR CONTROL MOTOR NO. 3 DRIVER
49	K60 20YL/BK	IDLE AIR CONTROL MOTOR NO. 2 DRIVER
50	Z107 16BK/TN	GROUND
51	K141 20TN/WT	OXYGEN SENSOR 1/2 SIGNAL
52	K25 18VT/LG	AMBIENT TEMPERATURE SENSOR SIGNAL
53	K341 20PK/WT (EATX)	OXYGEN SENSOR 2/2 SIGNAL
54	-	-
55	C24 20DB/TN	LOW SPEED RADIATOR FAN RELAY CONTROL
56	V36 20TN/RD	SPEED CONTROL VACUUM SOLENOID CONTROL
57	K39 20GY/RD	IDLE AIR CONTROL MOTOR NO. 1 DRIVER
58	K59 20VT/BK	IDLE AIR CONTROL MOTOR NO. 4 DRIVER
59	D25 20OR	PCI BUS
60	-	-
61	K6 18VT/WT	5 VOLT SUPPLY
62	K29 20WT/PK	BRAKE SWITCH SENSE
63	T10 20YL/DG (EATX)	TORQUE MANAGEMENT REQUEST SENSE
64	C28 20DB/OR	A/C COMPRESSOR CLUTCH RELAY CONTROL
65	D21 20PK	SCI TRANSMIT
66	G7 18WT/OR (ABS)	VEHICLE SPEED SENSOR SIGNAL
67	K51 20DB/VT	AUTOMATIC SHUT DOWN RELAY CONTROL
68	K52 20PK/BK	EVAPORATIVE EMISSION SOLENOID CONTROL
69	C27 20DB/PK	HIGH SPEED RADIATOR FAN RELAY CONTROL
70	K108 20WT/TN	EVAPORATIVE SOLENOID SENSE
71	K71 20WT/RD (EATX)	EATX RPM SIGNAL
72	K107 20OR	LEAK DETECTION PUMP SWITCH SENSE
73	-	-
74	K31 20BR/LG	FUEL PUMP RELAY CONTROL
75	D20 20LG	SCI RECEIVE
76	T41 20BK/LB (EATX)	TRS T41 SENSE
77	K106 20WT/DG	LEAK DETECTION PUMP SOLENOID CONTROL
78	-	-
79	-	-
80	V35 20LG/RD	SPEED CONTROL VENT SOLENOID CONTROL

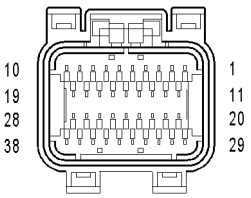

POWERTRAIN CONTROL MODULE C3 (NGC)

POWERTRAIN CONTROL MODULE C3 (NGC) - 38 WAY

CAV	CIRCUIT	FUNCTION
1	-	-
2	-	-
3	K51 20DB/VT	AUTOMATIC SHUT DOWN RELAY CONTROL
4	C27 20DB/PK	HIGH RAD FAN RELAY CONTROL
5	V35 20LG/RD	S/C VENT CONTROL
6	C24 20DB/TN	LOW RAD FAN RELAY CONTROL
7	V32 20YL/RD	S/C SUPPLY
8	K106 20WT/DG	NVLD SOLENOID CONTROL
9	-	-
10	-	-
11	C28 20DB/OR	A/C CLUTCH RELAY CONTROL
12	V36 20TN/RD	S/C VACUUM CONTROL
13	-	-
14	-	-
15	-	-
16	-	-
17	K4 18BK/LB	SENSOR GROUND 2
18	-	-
19	F142 16OR/DG	FUSED AUTOMATIC SHUT DOWN RELAY OUTPUT
20	K52 20PK/BK	EVAP PURGE CONTROL
21	T141 20YL/RD (MTX)	FUSED IGNITION SWITCH OUTPUT (START)
22	-	-
23	K29 20WT/PK	BRAKE SWITCH SIGNAL
24	-	-
25	-	-
26	T44 20YL	AUTOSTICK DOWNSHIFT SWITCH SIGNAL
27	T5 20LG	AUTOSTICK UPSHIFT SWITCH SIGNAL
28	F142 16OR/DG	FUSED AUTOMATIC SHUT DOWN RELAY OUTPUT
29	K108 20WT/TN	EVAP PURGE RETURN
30	K10 18DB/LG	PSP SWITCH SIGNAL
31	-	-
32	K25 18VT/LG	AAT SIGNAL
33	-	-
34	V37 20PK/LG	S/C SWITCH SIGNAL
35	K107 20OR	NVLD SWITCH SIGNAL
36	-	-
37	K31 20BR/LG	FUEL PUMP RELAY CONTROL
38	K90 20TN	STARTER RELAY CONTROL

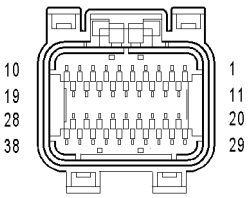

POWERTRAIN CONTROL MODULE C4 (NGC)

POWERTRAIN CONTROL MODULE C4 (NGC) - 38 WAY

CAV	CIRCUIT	FUNCTION
1	T60 20BR	OVERDRIVE SOLENOID CONTROL
2	T59 20PK	UNDERDRIVE SOLENOID CONTROL
3	-	-
4	-	-
5	-	-
6	T19 20WT	2-4 SOLENOID CONTROL
7	-	-
8	-	-
9	-	-
10	T20 20LB	LOW/REVERSE SOLENOID CONTROL
11	-	-
12	Z14 16BK/YL	GROUND
13	Z13 16BK/RD	GROUND
14	Z13 16BK/RD	GROUND
15	T1 20LG/BK	TRS T1 SENSE
16	T3 20VT	TRS T3 SENSE
17	-	-
18	T15 20LG	TRANSMISSION CONTROL RELAY CONTROL
19	T16 20RD	TRANSMISSION CONTROL RELAY OUTPUT
20	-	-
21	-	-
22	T9 20OR/BK	OVERDRIVE PRESSURE SWITCH SENSE
23	-	-
24	-	-
25	-	-
26	-	-
27	T41 20BK/WT	TRS T41 SENSE
28	T16 20RD	TRANSMISSION CONTROL RELAY OUTPUT
29	T50 20DG	LOW/REVERSE PRESSURE SWITCH SENSE
30	T47 20YL/BK	2-4 PRESSURE SWITCH SENSE
31	-	-
32	T14 20LG/WT	OUTPUT SPEED SENSOR SIGNAL
33	T52 20RD/BK	INPUT SPEED SENSOR SIGNAL
34	T13 20DB/BK	SPEED SENSOR GROUND
35	T54 20VT/YL	TRANSMISSION TEMPERATURE SENSOR SIGNAL
36	-	-
37	T42 20VT/WT	TRS T42 SENSE
38	T16 20RD	TRANSMISSION CONTROL RELAY OUTPUT

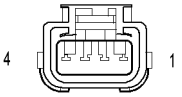

RADIATOR FAN

RADIATOR FAN - 4 WAY

CAV	CIRCUIT	FUNCTION
1	Z212 14BK	GROUND
2	Z213 14BK	GROUND
3	C23 12DG	LOW SPEED RADIATOR FAN RELAY OUTPUT
4	C25 12YL	HIGH SPEED RADIATOR FAN RELAY OUTPUT

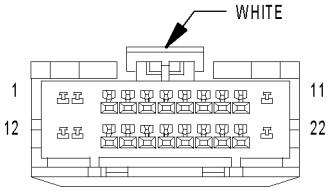

RADIO C1

RADIO C1 - WHITE 22 WAY

CAV	CIRCUIT	FUNCTION
1	-	-
2	X12 18RD/WT	FUSED IGNITION SWITCH OUTPUT (RUN-ACC)
3	E2 18OR/BR	PANEL LAMPS DRIVER
4	-	-
5	-	-
6	-	-
7	X54 20VT	RIGHT FRONT SPEAKER (+)
8	X56 20DB/RD	RIGHT FRONT SPEAKER (-)
9	X55 20BR/RD	LEFT FRONT SPEAKER (-)
10	X53 20DG	LEFT FRONT SPEAKER (+)
11	Z1 18BK	GROUND
12	M1 20PK	FUSED B(+)
13	X60 20DG/RD (EXCEPT JR27 BASE)	RADIO 12V OUTPUT
14	D25 20VT/YL	PCI BUS (RADIO)
15	-	-
16	-	-
17	-	-
18	X51 20BR/YL	LEFT REAR SPEAKER (+)
19	X57 20BR/LB	LEFT REAR SPEAKER (-)
20	X58 20DB/OR	RIGHT REAR SPEAKER (-)
21	X52 20DB/WT	RIGHT REAR SPEAKER (+)
22	-	-

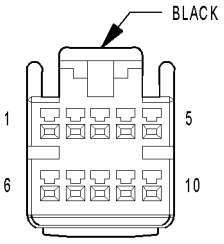

RADIO C2

RADIO C2 - BLACK 10 WAY

CAV	CIRCUIT	FUNCTION
1	X40 22GY/WT	AUDIO OUT RIGHT
2	Z4 22BK/OR	GROUND
3	C235 WT/LB	CD GROUND SHIELD
4	D25 22VT/YL	PCI BUS
5	X112 22RD	IGNITION SWITCH OUTPUT (RUN-ACC)
6	X41 22DG/WT	AUDIO OUT LEFT
7	Z140 22BK/TN	GROUND
8	-	-
9	E14 22OR/TN	PANEL LAMPS DIMMER SIGNAL
10	X160 22GY/YL	B(+)

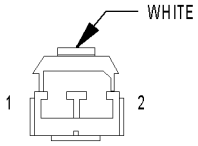

REAR FLOOR COURTESY LAMP

REAR FLOOR COURTESY LAMP - WHITE 2 WAY

CAV	CIRCUIT	FUNCTION
1	M1 18PK	FUSED B(+)
2	M2 18YL	COURTESY LAMPS DRIVER

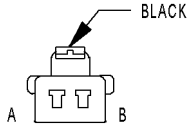

REAR VERTICAL MOTOR (JR27)

REAR VERTICAL MOTOR (JR27) - BLACK 2 WAY

CAV	CIRCUIT	FUNCTION
A	P13 16RD/WT	LEFT SEAT REAR UP
B	P11 16YL/WT	LEFT SEAT REAR UP

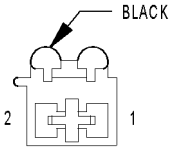

REAR VERTICAL MOTOR (JR41)

REAR VERTICAL MOTOR (JR41) - BLACK 2 WAY

CAV	CIRCUIT	FUNCTION
1	P11 18YL/WT	LEFT SEAT REAR UP
2	P13 18RD/WT	LEFT SEAT REAR DOWN

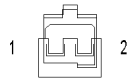

RECIRCULATION DOOR ACTUATOR

RECIRCULATION DOOR ACTUATOR - 2 WAY

CAV	CIRCUIT	FUNCTION
1	C32 20GY/DB	RECIRCULATION DOOR DRIVER
2	C34 20DB/WT	COMMON DOOR DRIVER

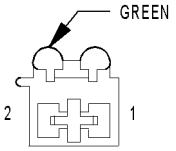

RECLINE MOTOR (JR41)

RECLINE MOTOR (JR41) - GREEN 2 WAY

CAV	CIRCUIT	FUNCTION
1	P41 18GY/WT	LEFT SEAT RECLINER SWITCH UP
2	P43 18GY/LB	LEFT SEAT RECLINER SWITCH DOWN

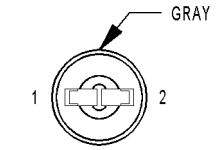

RIGHT BACK-UP LAMP

RIGHT BACK-UP LAMP - GRAY 2 WAY

CAV	CIRCUIT	FUNCTION
1	Z151 18BK	GROUND
2	L1 18VT/BK	BACK-UP LAMP FEED

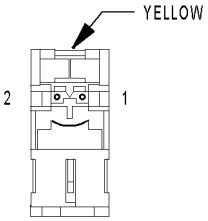

RIGHT CURTAIN AIRBAG SQUIB (JR41)

RIGHT CURTAIN AIRBAG SQUIB (JR41) - YELLOW 2 WAY

CAV	CIRCUIT	FUNCTION
1	R76 20LB/WT	RIGHT CURTAIN SQUIB 1 LINE 2
2	R74 20LB/YL	RIGHT CURTAIN SQUIB 1 LINE 1

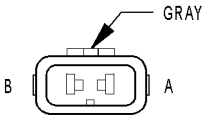

RIGHT FOG LAMP (JR27)

RIGHT FOG LAMP (JR27) - GRAY 2 WAY

CAV	CIRCUIT	FUNCTION
A	L39 20LB	FOG LAMP RELAY OUTPUT
B	Z144 20BK	GROUND

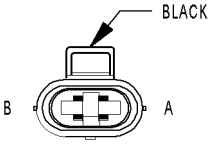

RIGHT FOG LAMP (JR41)

RIGHT FOG LAMP (JR41) - BLACK 2 WAY

CAV	CIRCUIT	FUNCTION
A	L39 20LB	FOG LAMP RELAY OUTPUT
B	Z144 20BK	GROUND

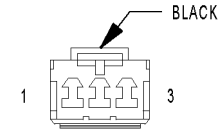

RIGHT FRONT DOOR SPEAKER

RIGHT FRONT DOOR SPEAKER - BLACK 3 WAY

CAV	CIRCUIT	FUNCTION
1	X80 18LB/BK (BASE)	RIGHT FRONT SPEAKER (-)
1	X80 18LB/BK (PREMIUM)	AMPLIFIED RIGHT FRONT SPEAKER (-)
2	-	-
3	X82 18LB/VT (BASE)	RIGHT FRONT SPEAKER (+)
3	X82 18LB/VT (PREMIUM)	AMPLIFIED RIGHT FRONT SPEAKER (+)

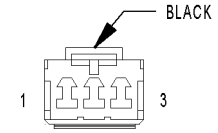

RIGHT FRONT INSTRUMENT PANEL SPEAKER (JR27 BASE)

RIGHT FRONT INSTRUMENT PANEL SPEAKER (JR27 BASE) - BLACK 3 WAY

CAV	CIRCUIT	FUNCTION
1	X56 20DB/RD	RIGHT INSTRUMENT PANEL SPEAKER (-)
1	X56 20DB/RD	RIGHT INSTRUMENT PANEL SPEAKER (-)
2	-	-
3	X54 20VT	RIGHT INSTRUMENT PANEL SPEAKER (+)
3	X54 20VT	RIGHT INSTRUMENT PANEL SPEAKER (+)

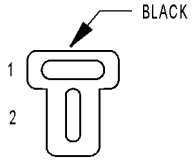

RIGHT FRONT INSTRUMENT PANEL SPEAKER (JR27 PREMIUM)

RIGHT FRONT INSTRUMENT PANEL SPEAKER (JR27 PREMIUM) - BLACK 2 WAY

CAV	CIRCUIT	FUNCTION
1	X86 18OR/RD	AMPLIFIED RIGHT INSTRUMENT PANEL SPEAKER (+)
2	X84 18OR/BK	AMPLIFIED RIGHT INSTRUMENT PANEL SPEAKER (-)

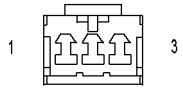

RIGHT FRONT INSTRUMENT PANEL SPEAKER (JR41 PREMIUM)

RIGHT FRONT INSTRUMENT PANEL SPEAKER (JR41 PREMIUM) - 3 WAY

CAV	CIRCUIT	FUNCTION
1	X84 18OR/BK	AMPLIFIED RIGHT INSTRUMENT PANEL SPEAKER (-)
2	-	-
3	X86 18OR/RD	AMPLIFIED RIGHT INSTRUMENT PANEL SPEAKER (+)

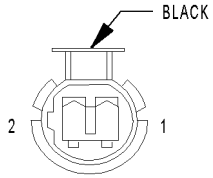

RIGHT FRONT WHEEL SPEED SENSOR

RIGHT FRONT WHEEL SPEED SENSOR - BLACK 2 WAY

CAV	CIRCUIT	FUNCTION
1	B7 20WT	RIGHT FRONT WHEEL SPEED SENSOR 12 VOLT SUPPLY
2	B6 20WT/DB	RIGHT FRONT WHEEL SPEED SENSOR SIGNAL

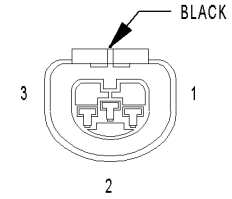

RIGHT HEADLAMP (EXCEPT EXPORT)

RIGHT HEADLAMP (EXCEPT EXPORT) - BLACK 3 WAY

CAV	CIRCUIT	FUNCTION
1	L44 20VT/RD	FUSED RIGHT LOW BEAM OUTPUT
2	Z142 20BK	GROUND
3	L34 18RD/OR	FUSED RIGHT HIGH BEAM OUTPUT

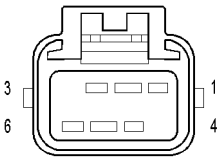

RIGHT LAVALIER MODULE (EXPORT)

RIGHT LAVALIER MODULE (EXPORT) - 6 WAY

CAV	CIRCUIT	FUNCTION
1	Z162 16BK	GROUND
2	L101 18RD	HEADLAMP ADJUST SIGNAL
3	L34 18RD/OR	FUSED RIGHT HIGH BEAM OUTPUT
4	L60 20TN	RIGHT TURN SIGNAL
5	L7 20BK/YL	HEADLAMP SWITCH OUTPUT
6	L44 20VT/RD	FUSED RIGHT LOW BEAM OUTPUT

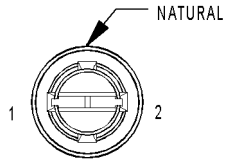

RIGHT LICENSE LAMP (JR27)

RIGHT LICENSE LAMP (JR27) - NATURAL 2 WAY

CAV	CIRCUIT	FUNCTION
1	L7 18BK/YL	HEADLAMP SWITCH OUTPUT
2	Z149 18BK	GROUND

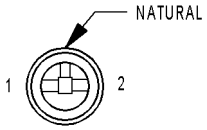

RIGHT LICENSE LAMP (JR41 EXPORT)

RIGHT LICENSE LAMP (JR41 EXPORT) - NATURAL 2 WAY

CAV	CIRCUIT	FUNCTION
1	L7 18BK/YL	HEADLAMP SWITCH OUTPUT
2	Z150 18BK	GROUND

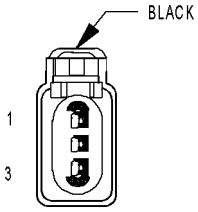

RIGHT PARK/ TURN SIGNAL LAMP

RIGHT PARK/TURN SIGNAL LAMP - BLACK 3 WAY

CAV	CIRCUIT	FUNCTION
1	L60 20TN	RIGHT TURN SIGNAL
2	L7 20BK/YL	HEADLAMP SWITCH OUTPUT
3	Z147 20BK	GROUND

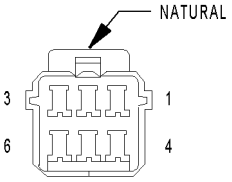

RIGHT POWER MIRROR

RIGHT POWER MIRROR - NATURAL 6 WAY

CAV	CIRCUIT	FUNCTION
1	P94 22WT/YL (JR27)	RIGHT MIRROR VERTICAL
1	C16 20LB/YL (JR41/PREMIUM)	FUSED REAR WINDOW DEFOGGER RELAY OUTPUT
2	Z315 20BK (JR27)	GROUND
2	Z3 20BK (JR41/PREMIUM)	GROUND
3	C16 20LB/YL (JR27)	FUSED REAR WINDOW DEFOGGER RELAY OUTPUT
3	P94 22WT/YL (JR41)	RIGHT MIRROR VERTICAL
4	P90 22LG/BK	RIGHT POWER MIRROR SUPPLY
5	P90 22LG/BK (JR27)	RIGHT POWER MIRROR SUPPLY
6	P92 22YL	RIGHT MIRROR HORIZONTAL

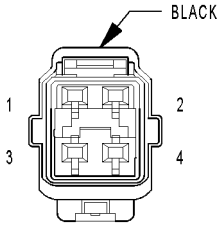

RIGHT REAR DOOR LOCK MOTOR/ AJAR SWITCH (JR41)

RIGHT REAR DOOR LOCK MOTOR/AJAR SWITCH (JR41) - BLACK 4 WAY

CAV	CIRCUIT	FUNCTION
1	G76 20TN/YL	RIGHT REAR DOOR AJAR SWITCH SENSE
2	Z318 18BK	GROUND
3	P182 18PK/DB	RIGHT REAR UNLOCK RELAY OUTPUT
4	P180 18OR/TN	RIGHT REAR LOCK RELAY OUTPUT

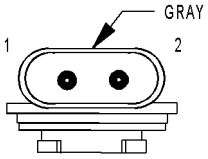

RIGHT REAR FOG LAMP (JR27 EXPORT)

RIGHT REAR FOG LAMP (JR27 EXPORT) - GRAY 2 WAY

CAV	CIRCUIT	FUNCTION
1	Z149 18BK	GROUND
2	L36 18LG	REAR FOG LAMP RELAY OUTPUT

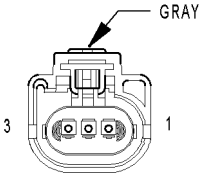

RIGHT REAR FOG LAMP (JR41 EXPORT)

RIGHT REAR FOG LAMP (JR41 EXPORT) - GRAY 3 WAY

CAV	CIRCUIT	FUNCTION
1	Z150 18BK	GROUND
2	-	-
3	L36 18LG	REAR FOG LAMP CONTROL

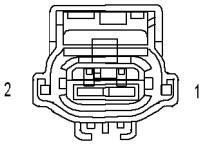

RIGHT REAR POWER WINDOW MOTOR

RIGHT REAR POWER WINDOW MOTOR - 2 WAY

CAV	CIRCUIT	FUNCTION
1	Q24 14DG	POWER WINDOW RIGHT REAR B(+) DOWN
2	Q14 14GY	POWER WINDOW RIGHT REAR B(+) UP

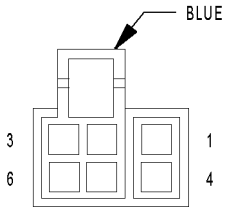

RIGHT REAR POWER WINDOW SWITCH (JR41)

RIGHT REAR POWER WINDOW SWITCH (JR41) - BLUE 6 WAY

CAV	CIRCUIT	FUNCTION
1	Q24 14DG	POWER WINDOW RIGHT REAR B(+) DOWN
2	Q18 14GY/BK	RIGHT REAR POWER WINDOW DRIVER (UP)
3	-	-
4	Q28 14DG/WT	MASTER POWER WINDOW SWITCH RIGHT REAR (DOWN)
5	Q14 14GY	POWER WINDOW RIGHT REAR B(+) UP
6	Q1 14YL	POWER WINDOW SWITCH FEED

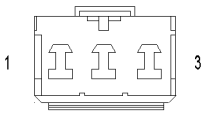

RIGHT REAR SPEAKER

RIGHT REAR SPEAKER - 3 WAY

CAV	CIRCUIT	FUNCTION
1	X92 18TN/BK (BASE)	RIGHT REAR SPEAKER (-)
1	X92 18TN/BK (PREMIUM)	AMPLIFIED RIGHT REAR SPEAKER (-)
2	-	-
3	X94 18TN/VT (BASE)	RIGHT REAR SPEAKER (+)
3	X94 18TN/VT (PREMIUM)	AMPLIFIED RIGHT REAR SPEAKER (+)

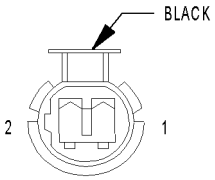

RIGHT REAR WHEEL SPEED SENSOR

RIGHT REAR WHEEL SPEED SENSOR - BLACK 2 WAY

CAV	CIRCUIT	FUNCTION
1	B2 20YL	RIGHT REAR WHEEL SPEED SENSOR 12 VOLT SUPPLY
2	B1 20YL/DB	RIGHT REAR WHEEL SPEED SENSOR SIGNAL

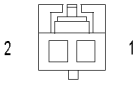

RIGHT REMOTE RADIO SWITCH (2.7L)

RIGHT REMOTE RADIO SWITCH (2.7L) - 2 WAY

CAV	CIRCUIT	FUNCTION
1	X3 22BK/RD	HORN/RADIO CONTROL MUX
2	Z123 22BK/OR	GROUND

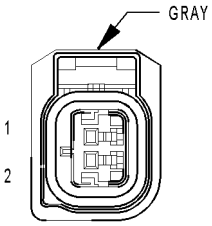

RIGHT SIDE IMPACT SENSOR 1

RIGHT SIDE IMPACT SENSOR 1 - GRAY 2 WAY

CAV	CIRCUIT	FUNCTION
1	R16 20BK/LG	RIGHT SIDE IMPACT SENSOR 1 GROUND
2	R14 20TN/LG	RIGHT SIDE IMPACT SENSOR 1 SIGNAL

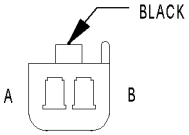

RIGHT SPEED CONTROL SWITCH

RIGHT SPEED CONTROL SWITCH - BLACK 2 WAY

CAV	CIRCUIT	FUNCTION
A	V37 22RD/LG (2.0L/2.4L)	S/C SWITCH SIGNAL
A	V37 22RD/LG (2.7L)	SPEED CONTROL SWITCH SIGNAL
B	Z123 22BK/LG	GROUND

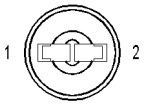

RIGHT TAIL/SIDE MARKER LAMP

RIGHT TAIL/SIDE MARKER LAMP - 2 WAY

CAV	CIRCUIT	FUNCTION
1	Z151 18BK	GROUND
2	L7 18BK/YL	HEADLAMP SWITCH OUTPUT

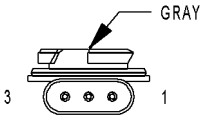

RIGHT TAIL/STOP LAMP

RIGHT TAIL/STOP LAMP - GRAY 3 WAY

CAV	CIRCUIT	FUNCTION
1	Z151 18BK	GROUND
2	L7 18BK/YL	HEADLAMP SWITCH OUTPUT
3	L50 18WT/TN	BRAKE LAMP SWITCH OUTPUT

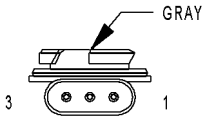

RIGHT TAIL/ TURN SIGNAL LAMP (JR41 DODGE)

RIGHT TAIL/TURN SIGNAL LAMP (JR41 DODGE) - GRAY 3 WAY

CAV	CIRCUIT	FUNCTION
1	Z151 18BK	GROUND
2	L7 18BK/YL	HEADLAMP SWITCH OUTPUT
3	L60 18TN	RIGHT TURN SIGNAL

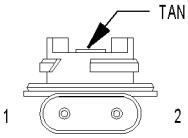

RIGHT TURN LAMP (CHRYSLER/EXCEPT JR41 DODGE)

RIGHT TURN LAMP (CHRYSLER/EXCEPT JR41 DODGE) - TAN 2 WAY

CAV	CIRCUIT	FUNCTION
1	L60 18LG	RIGHT TURN SIGNAL
2	Z151 18BK	GROUND

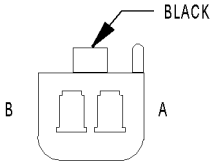

RIGHT VISOR/ VANITY LAMPS

RIGHT VISOR/VANITY LAMPS - BLACK 2 WAY

CAV	CIRCUIT	FUNCTION
A	M1 18PK (JR27)	FUSED B(+)
A	M1 20PK (JR41)	FUSED B(+)
B	Z312 18BK (JR27)	GROUND
B	Z312 20BK (JR41)	GROUND

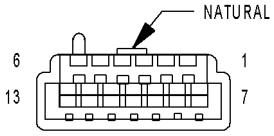

SEAT BELT CONTROL MODULE (JR27 EXPORT)

SEAT BELT CONTROL MODULE (JR27 EXPORT) - NATURAL 13 WAY

CAV	CIRCUIT	FUNCTION
1	-	-
2	G75 20TN	DRIVER DOOR AJAR SWITCH SENSE
3	G74 20TN/RD	PASSENGER DOOR AJAR SWITCH SENSE
4	F13 18DB	FUSED IGNITION SWITCH OUTPUT (RUN-ACC)
5	A45 18BR	FUSED B(+)
6	Z128 18BK	GROUND
7	R7 18OR/BK	DRIVER SEAT BELT SOLENOID CONTROL
8	R8 18OR/RD	PASSENGER SEAT BELT SOLENOID CONTROL
9	-	-
10	-	-
11	-	-
12	-	-
13	Z129 18BK	GROUND

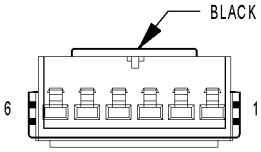

SENTRY KEY IMMOBILIZER MODULE

SENTRY KEY IMMOBILIZER MODULE - BLACK 6 WAY

CAV	CIRCUIT	FUNCTION
1	-	-
2	D25 20VT/PK	PCI BUS
3	-	-
4	F12 20DB/WT	FUSED IGNITION SWITCH OUTPUT (RUN-START)
5	Z110 20BK	GROUND
6	A51 20RD/WT	FUSED B(+)

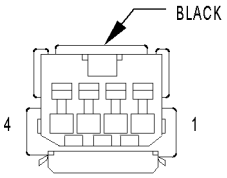

SUN SENSOR (ATC)

SUN SENSOR (ATC) - BLACK 4 WAY

CAV	CIRCUIT	FUNCTION
1	-	-
2	-	-
3	C57 20DB/GY	SENSOR GROUND
4	C38 20DB	SUN SENSOR SIGNAL

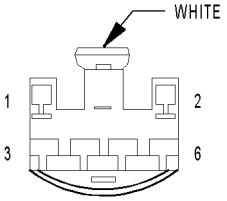

SUNROOF CONTROL MODULE (JR41)

SUNROOF CONTROL MODULE (JR41) - WHITE 6 WAY

CAV	CIRCUIT	FUNCTION
1	Z312 18BK	GROUND
2	F21 18TN	FUSED IGNITION SWITCH OUTPUT (RUN)
3	Q43 20VT	SUNROOF VENT
4	Q44 20BR	SUNROOF SWITCH GROUND
5	Q42 20LB	SUNROOF CLOSE
6	Q41 20WT	SUNROOF OPEN

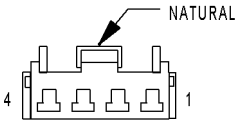

SUNROOF SWITCH (JR41)

SUNROOF SWITCH (JR41) - NATURAL 4 WAY

CAV	CIRCUIT	FUNCTION
1	Q41 20WT	SUNROOF OPEN
2	Q43 20VT	SUNROOF VENT
3	Q44 20BR	SUNROOF SWITCH GROUND
4	Q42 20LB	SUNROOF CLOSE

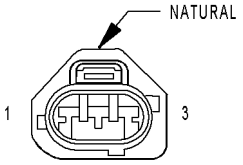

THROTTLE POSITION SENSOR (2.0L/2.4L)

THROTTLE POSITION SENSOR (2.0L/2.4L) - NATURAL 3 WAY

CAV	CIRCUIT	FUNCTION
1	K6 20VT/WT	5 VOLT SUPPLY
2	K22 20OR/DB	TP SIGNAL
3	K4 20BK/LB	SENSOR GROUND 1

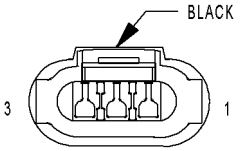

THROTTLE POSITION SENSOR (2.7L)

THROTTLE POSITION SENSOR (2.7L) - BLACK 3 WAY

CAV	CIRCUIT	FUNCTION
1	K6 20VT/WT	5 VOLT SUPPLY
2	K22 20OR/DB	THROTTLE POSITION SENSOR SIGNAL
3	K4 20BK/LB	SENSOR GROUND 1

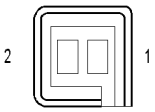

TRACTION CONTROL SWITCH

TRACTION CONTROL SWITCH - 2 WAY

CAV	CIRCUIT	FUNCTION
1	Z2 20BK/LG	GROUND
2	B27 20RD/YL	TRACTION CONTROL SWITCH SENSE

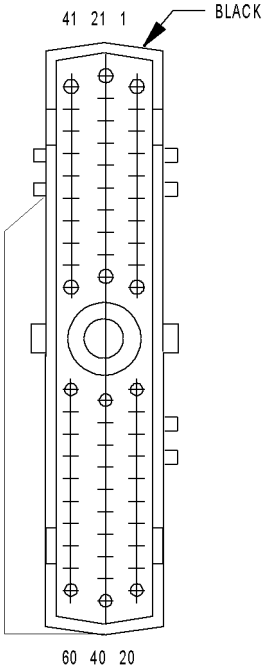

TRANSMISSION CONTROL MODULE (2.7L)

TRANSMISSION CONTROL MODULE (2.7L) - BLACK 60 WAY

CAV	CIRCUIT	FUNCTION
1	T1 20LG/BK	TRS T1 SENSE
2	-	-
3	T3 20VT	TRS T3 SENSE
4	-	-
5	T5 20LG (AUTOSTICK)	AUTOSTICK UPSHIFT SWITCH SENSE
6	K71 20WT/RD	EATX RPM SIGNAL
7	D21 20PK	SCI TRANSMIT
8	A41 16YL	FUSED IGNITION SWITCH OUTPUT (START)
9	T9 20OR/BK	OVERDRIVE PRESSURE SWITCH SENSE
10	T10 20YL/DG	TORQUE MANAGEMENT REQUEST SENSE
11	F11 18RD/WT	FUSED IGNITION SWITCH OUTPUT (OFF-RUN-START)
12	K22 20OR/DB	THROTTLE POSITION SENSOR SIGNAL
13	T13 20DB/BK	SPEED SENSOR GROUND
14	T14 20LG/WT	OUTPUT SPEED SENSOR SIGNAL
15	T15 20LG	TRANSMISSION CONTROL RELAY CONTROL
16	T16 20RD	TRANSMISSION CONTROL RELAY OUTPUT
17	T16 20RD	TRANSMISSION CONTROL RELAY OUTPUT
18	-	-
19	T19 20WT	2-4 SOLENOID CONTROL
20	T20 20LB	LOW/REVERSE SOLENOID CONTROL
21	-	-
22	-	-
33	-	-
34	-	-
35	-	-
36	-	-
37	-	-
38	-	-
39	-	-
40	-	-
41	T41 20BK/WT	TRS T41 SENSE
42	T42 20VT/WT	TRS T42 SENSE
43	D25 20VT/YL	PCI BUS
44	T44 20YL (AUTOSTICK)	AUTOSTICK DOWNSHIFT SWITCH SENSE
45	-	-
46	D6 20PK/LB	SCI RECEIVE
47	T47 20YL/BK	2-4 PRESSURE SWITCH SENSE
48	-	-
49	-	-
50	T50 20DG	LOW/REVERSE PRESSURE SWITCH SENSE
51	K4 18BK/LB	SENSOR GROUND 1
52	T52 20RD/BK	INPUT SPEED SENSOR SIGNAL
53	Z112 18BK/YL	GROUND
54	T54 20VT/YL	TRANSMISSION TEMPERATURE SENSOR SIGNAL
55	-	-
56	A24 18BK	FUSED B(+)
57	Z113 18BK/RD	GROUND
58	G7 18WT/OR	VEHICLE SPEED SENSOR SIGNAL
59	T59 20PK	UNDERDRIVE SOLENOID CONTROL
60	T60 20BR	OVERDRIVE SOLENOID CONTROL

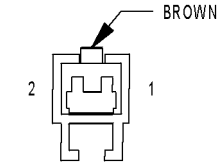

TRANSMISSION RANGE INDICATOR ILLUMINATION (PRNDL)

TRANSMISSION RANGE INDICATOR ILLUMINATION (PRNDL) - BROWN 2 WAY

CAV	CIRCUIT	FUNCTION
1	E2 20OR	PANEL LAMPS DRIVER
2	Z157 18BK (JR27)	GROUND
2	Z157 20BK (JR41)	GROUND

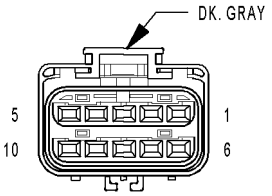

TRANSMISSION RANGE SENSOR

TRANSMISSION RANGE SENSOR - DK. GRAY 10 WAY

CAV	CIRCUIT	FUNCTION
1	F20 18WT	FUSED IGNITION SWITCH OUTPUT (RUN)
2	-	-
3	T13 20DB/BK	SPEED SENSOR GROUND
4	T54 18VT/YL	TRANSMISSION TEMPERATURE SENSOR SIGNAL
5	T41 20BK/LB	TRS T41 SENSE
6	L1 18VT/BK	BACK-UP LAMP FEED
7	T1 20LG/BK	TRS T1 SENSE
8	T3 18VT	TRS T3 SENSE
9	T42 20VT/WT	TRS T42 SENSE
10	T41 20BK/WT	TRS T41 SENSE

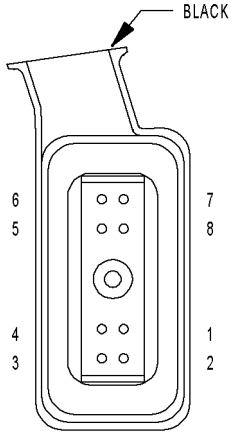

TRANSMISSION SOLENOID/ PRESSURE SWITCH ASSEMBLY

TRANSMISSION SOLENOID/ PRESSURE SWITCH ASSEMBLY - BLACK 8 WAY

CAV	CIRCUIT	FUNCTION
1	T47 18YL/BK	2-4 PRESSURE SWITCH SENSE
2	T50 18DG	LOW/REVERSE PRESSURE SWITCH SENSE
3	T9 18OR/BK	OVERDRIVE PRESSURE SWITCH SENSE
4	T16 16RD	TRANSMISSION CONTROL RELAY OUTPUT
5	T59 18PK	UNDERDRIVE SOLENOID CONTROL
6	T60 18BR	OVERDRIVE SOLENOID CONTROL
7	T20 18LB	LOW/REVERSE SOLENOID CONTROL
8	T19 18WT	2-4 SOLENOID CONTROL

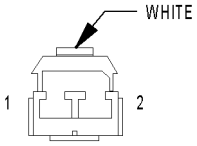

TRUNK LAMP

TRUNK LAMP - WHITE 2 WAY

CAV	CIRCUIT	FUNCTION
1	G78 18TN/BK	DECKLID AJAR SWITCH SENSE
2	M1 18PK	FUSED B(+)

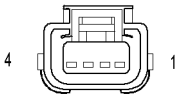

VEHICLE SPEED CONTROL SERVO

VEHICLE SPEED CONTROL SERVO - 4 WAY

CAV	CIRCUIT	FUNCTION
1	V36 20TN/RD (2.0L/2.4L)	S/C VACUUM CONTROL
1	V36 20TN/RD (2.7L)	SPEED CONTROL VACUUM SOLENOID CONTROL
2	V35 20LG/RD (2.0L/2.4L)	S/C VENT CONTROL
2	V35 20LG/RD (2.7L)	SPEED CONTROL VENT SOLENOID CONTROL
3	V30 20DB/RD	SPEED CONTROL BRAKE SWITCH OUTPUT
4	Z190 20BK	GROUND

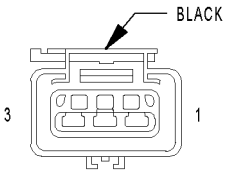

VEHICLE SPEED SENSOR (2.0L MTX)

VEHICLE SPEED SENSOR (2.0L MTX) - BLACK 3 WAY

CAV	CIRCUIT	FUNCTION
1	K7 18OR/WT	8 VOLT SUPPLY
2	K4 20BK/LB	SENSOR GROUND
3	G7 18WT/OR	VEHICLE SPEED SIGNAL

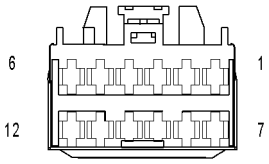

WINDOW DROP RELAY ASSEMBLY (JR27)

WINDOW DROP RELAY ASSEMBLY - (JR27) - 12 WAY

CAV	CIRCUIT	FUNCTION
1	Y94 14OR/WT	MASTER POWER WINDOW SWITCH LEFT FRONT (DOWN)
2	Y96 14LG	MASTER POWER WINDOW SWITCH LEFT REAR (DOWN)
3	Y95 14PK	MASTER POWER WINDOW SWITCH RIGHT FRONT (DOWN)
4	Y97 14VT	MASTER POWER WINDOW SWITCH RIGHT REAR (DOWN)
5	F20 20WT	FUSED IGNITION SWITCH OUTPUT (RUN)
6	Y93 20RD/WT	WINDOW DROP RELAY CONTROL
7	Q21 14WT	LEFT FRONT WINDOW DRIVER (DOWN)
8	Q27 14RD/BK	LEFT REAR WINDOW DRIVER (DOWN)
9	Q26 14VT/WT	RIGHT FRONT WINDOW DRIVER (DOWN)
10	Q28 14DG/WT	RIGHT REAR WINDOW DRIVER (DOWN)
11	F21 14TN	FUSED IGNITION SWITCH OUTPUT (RUN)
12	F21 14TN	FUSED IGNITION SWITCH OUTPUT (RUN)

8W-91 CONNECTOR/GROUND/SPLICE LOCATION

TABLE OF CONTENTS

page

CONNECTOR/GROUND/SPLICE LOCATION
DESCRIPTION 1

CONNECTOR/GROUND/SPLICE LOCATION

DESCRIPTION

This section provides illustrations identifying connector, ground, and splice locations in the vehicle. Connector, ground, and splice indexes are provided. Use the wiring diagrams in each section for connector, ground, and splice identification. Refer to the index for the proper figure number. For items that are not shown in this section N/S is placed in the Fig. column.

CONNECTORS

Connector Name/Number	Color	Location	Fig.
A/C Compressor Clutch (2.0L/2.4L)	GY	Top of Compressor	16
A/C Compressor Clutch (2.7L)	GY	Top of Compressor	15
A/C Evaporator Temperature Sensor	BK	Right Side of HVAC	34, 35
A/C-Heater Control C1 (MTC)	NAT	Rear of Control, Center of Instrument Panel	21, 28
A/C-Heater Control C2 (MTC)	BK	Rear of Control, Center of Instrument Panel	21, 28
A/C Pressure Transducer	GY	Top of A/C Compressor	16
Airbag Control Module (ORC)(BASE)	GY	Center Body Near Shifter Assembly	21, 38
Airbag Control Module C1 (ORC) (Premium)	YL	Front Center Body Connector	38
Airbag Control Module C2 (ORC) (Premium)	YL	Front Center Body Connectors and Instruments Panel Harness Connector	21, 38
Ambient Temperature Sensor	BK	Front Center of Engine Compartment	1
Antenna		Center of Instrument Panel and Trunk	21, 28, 38, 39, 52, 53
Automatic Day/Night Mirror	BK	At Mirror	37
Auto Headlamp Relay (Premium)	NAT	Lower Center I/P	21
Automatic Temperature Control Head	BK	Upper Center of I/P,at back side of Controls	21, 28
Autostick Switch	BK	Center of Body at Base of Shifter	39
Back-Up Lamp Switch (MTX)	GY	Rear of Transmission	11
Battery Negative Post		Left Side Engine Compartment	9
Battery Positive Post		Left Side Engine Compartment	8, 9
Battery Positive Terminal		Left Side Engine Compartment	8

CONNECTOR/GROUND/SPLICE LOCATION (Continued)

Connector Name/Number	Color	Location	Fig.
Blend Door Actuator	NAT	At Blend Door, Bottom Center of HVAC	36
Blower Motor	BK	At Blower Motor, Right Bottom of HVAC	35
Blower Motor Power Module C1 (ATC)	BK	At Control Module, Right End of HVAC	35
Blower Motor Power Module C2 (ATC)	BK	At Control Module, Right End of HVAC	35
Blower Motor Resister Block	BK	Right Side of HVAC	34
Body Control Module C1	WT	Left Front Kick Panel	21, 32
Body Control Module C2	WT	Left Front Kick Panel	21, 32
Body Control Module C3	GY	Left Front Kick Panel	32
Body Control Module C4	WT	Left Front Kick Panel	32, 40
Brake Fluid Level Switch	BK	Left Rear Engine Compartment	5, 6
Brake Lamp Switch	GY	At Brake Pedal	25
Brake Transmission Shift Interlock Solenoid	WT	At Steering Column	21, 23
C100	LT/GN	Lower Left Side Instrument Panel	21, 22, 24
C101	LT/GY	Lower Left Side Instrument Panel	21, 22, 24
C104 (EATX)	LT/GY	Left Front Engine Compartment	4, 10, 12
C105 (EATX)	BK	Left Front Engine Compartment	4, 10, 12
C111	BK	Left Side Engine Compartment	5
C113 (2.7l)	LT/GY	Left Side Engine Compartment	5
C121	BK	Left Side Cowl Panel	40
C169 (MTX)	BK	Left Front Engine Compartment	4, 11, 12
C200 (ATC)	WT	Lower Center Instrument Panel	21, 23, 36
C200 (MTC)	NAT	Left End of HVAC	21, 23
C225 (Export)	BK	Center Body Behind Occupant Restraint Controller	39
C300	BK	In Trunk Near Left Tail Lamp	47
C301	BK	In Trunk Near Right Tail Lamp	47
C302	BK	Lower Left Side Instrument Panel	21, 22, 24, 40
C303	LT/GY	Lower Left Side Instrument Panel	21, 40
C304	YL	Center Body to Console	21, 38, 39
C305	BK	At Decklid	56
C306	BK	Under Passenger Seat	21, 38, 39
C307	WT	Lower Left Side Instrument Panel	40
C308	BL	At Left B-Pillar	42, 48
C309 (Power Seat)	BK	Under Driver Seat	39, 44
C310	BR	Lower Left Side Instrument Panel	21, 23
C311	BL	Lower Left Side Instrument Panel	21, 23
C312 (Except JR41 Domestic)	BK	Center Behind Occupant Restraint Controller	39
C315	BR	Right Side Instrument Panel	21, 26, 49, 50
C316	BL	Right Side Instrument Panel	21, 26, 49, 50
C318	BL	At Right B-Pillar	48

CONNECTOR/GROUND/SPLICE LOCATION (Continued)

Connector Name/Number	Color	Location	Fig.
C320	BK	Near License Lamp	55
C321	BK	Left Rear Body Near Wheel Opening	41, 42
C322 (Export)	BK	Rear Body to Rear Fog Lamp Harness	N/S
C323	BK	In Console	N/S
C324	BK	Under Driver Seat	N/S
C325	BK	Under Passenger Seat	N/S
Camshaft Position Sensor (2.0L/2.4L)	BK	Left Side of Cylinder Head	14
Camshaft Position Sensor (2.7L)	BK	Front of Engine	15
Center High Mounted Stop Lamp JR27	RD/GY	In Trunk Dressup panel, near Trunk Lamp	54
Center High Mounted Stop Lamp JR41	BK	At Lamp, in Deck Lid	N/S
Cigar Lighter/Power Outlet	BK	Lower Center Instrument Panel	21
Cigar Lighter/Power Outlet Feed		Lower Center Instrument Panel	21, 27
Cigar Lighter/Power Outlet Ground		Lower Center Instrument Panel	21, 27
Clockspring C1	NAT	Rear of Clockspring	21, 23
Clockspring C2	YL	Rear of Clockspring	21, 23
Clutch Interlock/ Upstop Switch (MTX)	BK	At Switch	N/S
Coil On Plug No.1 (2.7L)	BK	At Plug	15
Coil On Plug No.2 (2.7L)	BK	At Plug	15
Coil On Plug No.3 (2.7L)	BK	At Plug	15
Coil On Plug No.4 (2.7L)	BK	At Plug	15
Coil On Plug No.5 (2.7L)	BK	At Plug	15
Coil On Plug No.6 (2.7L)	BK	At Plug	15
Compact Disk Changer	BK	At Compact Disk Changer	N/S
Compass/Mini-Trip Computer	BK	Upper Center Instrument Panel	21, 28
Controller Antilock Brake	BK	Left Front Engine Compartment	4
Crankshaft Position Sensor (2.0L/2.4L)	BK	Front of Cylinder Block, Below Starter	13
Crankshaft Position Sensor (2.7L)	BK	Rear of Engine	15
Data Link Connector	BK	Lower Left Center Instrument Panel	21, 22, 23
Daytime Running Lamp Module		In Junction Block	31
Decklid Cylinder Lock Switch	BK	At Decklid	55
Decklid Release Solenoid/Ajar Switch	BK	At Decklid	55, 56
Decklid Release Switch	BK	Left Side Instrument Panel	21, 23
Decklid Security Switch (VTSS)	BK	At Decklid	56

CONNECTOR/GROUND/SPLICE LOCATION (Continued)

Connector Name/Number	Color	Location	Fig.
Dome Lamp	BK	At Lamp	51
Driver Airbag Squib No.1	GY	Back Side of the Driver Airbag Module	30
Driver Airbag Squib No.2	BK	Back Side of the Driver Airbag Module	30
Driver Cylinder Lock Switch	GY	In Driver Door	N/S
Driver Door Lock Motor/Ajar Switch	BK	In Driver Door, See Passenger figure	N/S
Driver Door Lock Switch	NAT	In Driver Door, See Passenger figure	N/S
Driver Heated Seat Module		Under Driver Seat	N/S
Driver Power Window Motor	LT/GY	In Driver Door, See Passenger figure	N/S
Driver Power Window Switch		In Driver Door, See Passenger figure	N/S
Driver Seat Belt Solenoid (Export)	BK	Under Driver Seat	21, 38, 44
Driver Seat Belt Switch (JR41)	WT	Near Belt Real	N/S
Driver Seat Belt Tensioner (JR27)	YL	Under Driver Seat	21, 38, 42, 44
Driver Seat Belt Tensioner (JR41)	YL	Near Belt Real	N/S
Engine Coolant Temperature Sensor (2.0L/2.4L)	BK	At Sensor	14
Engine Coolant Temperature Sensor (2.7L)	BK	At Sensor	15
Engine Starter Motor	BK	At Engine Starter Motor	15
Evaporative Purge Solenoid	BK	Left Side Engine Compartment	5
Evaporator Temperature Sensor	BK	At Rear Center of HVAC	35
Fog Lamp Relay (Premium)	NAT	Lower Left Side I/P	22
Front Vertical Motor (Power Seat)	BK	Under Seat	44
Front Washer Pump Motor	BK	Right Front Engine Compartment	2
Front Wiper Motor	BK	Left Rear Engine Compartment	6
Fuel Injector No.1 (2.0L/2.4L)	BK	At Injector	14
Fuel Injector No.1 (2.7L)	BK	At Injector	15
Fuel Injector No.2 (2.0L/2.4L)	BK	At Injector	14
Fuel Injector No.2 (2.7L)	BK	At injector	15
Fuel Injector No.3 (2.0L/2.4L)	BK	At Injector	14
Fuel Injector No.3 (2.7L)	BK	At Injector	15
Fuel Injector No.4 (2.0L/2.4L)	BK	At Injector	14
Fuel Injector No.4 (2.7L)	BK	At Injector	15
Fuel Injector No.5 (2.7L)	BK	At Injector	15
Fuel Injector No.6 (2.7L)	BK	At Injector	15
Fuel Pump Module C1	LT/GY	Center Rear of Trunk Area	N/S
Generator (2.0L/2.4L)	BK	Rear of Generator	13, 16
Generator (2.7L)	BK	Rear of Generator	15, 16
Headlamp Delay Relay		In Junction Block	31

CONNECTOR/GROUND/SPLICE LOCATION (Continued)

Connector Name/Number	Color	Location	Fig.
Headlamp Leveling Switch (Export)	BK	Left Side Instrument Panel	21
Headlamp Washer Pump Motor	BK	At Pump	2
Heated Seat Switch		In Console	N/S
Horizontal Motor (Power Seat) (JR27)	BK	Under Seat	44
Horizontal Motor (Power Seat) (JR41)	GY	Under Seat	N/S
Horn	BK	Right Front Frame Rail	1
Horn Relay		In Junction Block	31
Idle Air Control Motor (2.0L/2.4L)	BK	On Throttle Body	13
Idle Air Control Motor (2.7L)	BK	On Throttle Body	15
Ignition Coil Pack (2.0L/2.4L)	BK	Top of Valve Cover	14
Ignition Switch C1	BK	At Switch	21, 23
Ignition Switch C2	BK	At Switch	21, 23
Ignition Switch C3	GN	At Switch	21, 23
Inlet Air Temperature Sensor	BK	On Intake	13, 17
Input Speed Sensor	GY	Left Front of Transmission	10
Instrument Cluster	NAT	Rear of Cluster	21, 29
Junction Block Body Control Module-JB		Left Front Kick Panel	31
Junction Block C1	BR	Left Front Kick Panel	32
Junction Block C2	NAT	Left Front Kick Panel	32
Junction Block C3	WT	Left Front Kick Panel	32
Junction Block C4	BL	Left Front Kick Panel	21, 32
Junction Block C5	GY	Left Front Kick Panel	21, 23, 32
Junction Block C6	WT	Left Front Kick Panel	21, 32
Junction Block C7	NAT	Left Front Kick Panel	21, 23, 32
Junction Block C8	BK	Left Front Kick Panel	21, 23, 32
Junction Block C9	WT	Left Front Kick Panel	32, 40
Junction Block C10	NAT	Left Front Kick Panel	40
Junction Block C11 (Export)	BK	Left Front Kick Panel	21, 32
Knock Sensor (2.0L/2.4L)	GY	At Sensor	14
Knock Sensor (2.7L)	BK	Below Throttle Body	N/S
Leak Detection Pump	BK	On Fuel Tank	N/S
Left Back-Up Lamp	GY	At Lamp	N/S
Left Curtain Airbag	YL	On Airbag Module At Headliner	42
Left Fog Lamp	GY	On Airbag Module At Headliner	7
Left Front Door Speaker	BK	At Speaker, Similar to Right, See Passenger Door Connectors	N/S
Left Front Instrument Panel Speaker	BK	At Speaker	21, 22

CONNECTOR/GROUND/SPLICE LOCATION (Continued)

Connector Name/Number	Color	Location	Fig.
Left Front Wheel Speed Sensor	BK	Left Fender Side Shield	5
Left Headlamp (Except Export)	BK	Left Headlamp Opening	4
Left Lavalier Module (Export)	BK	Left Headlamp Opening	4
Left License Lamp	NAT	At Lamp	N/S
Left Park/Turn Signal Lamp (Except Export)	BK	Left Headlamp Opening	4
Left Power Mirror	NAT	At Door, See Right figure	N/S
Left Rear Door Lock Motor/Ajar Switch	GY	In Door Near Latch	48
Left Rear Fog Lamp (Export)	GY	At Lamp	N/S
Left Rear Power Window Motor	BK	At Motor	41, 48
Left Rear Power Window Switch (JR41)	BL	At Switch	48
Left Rear Speaker	BK	Left Side Shelf Panel at Speaker	41, 45
Left Rear Wheel Speed Sensor	BK	Left Quarter Panel	41, 42
Left Remote Radio Switch		Under Horn Pad	30
Left Side Impact Sensor	YL	At B Post	N/S
Left Speed Control Switch	BK	Under Horn Pad	30
Left Tail/Side Marker Lamp	BK	At Lamp	N/S
Left Tail/Stop Lamp	GY	At Lamp	N/S
Left Tail/Turn Signal Lamp	GY	At Lamp	N/S
Left Turn Lamp	TN	At Lamp	N/S
Left Visor/Vanity Lamps	BK	At Lamp	37, 51
Licence Lamp (Except Export)	NAT	At Lamp	N/S
Horn	BK	Right Front Grille Area	1
Manifold Absolute Pressure Sensor (2.0L/2.4L)	BK	Intake Manifold	13
Manifold Absolute Pressure Sensor (2.7L)	BK	Intake Manifold	15
Master Power Window Switch	BL	At Switch	N/S
Mode Door Actuator	BK	Left Bottom Side of HVAC, Center I/P	34, 36
Multi-Function Switch C1	NAT	Left Side of Switch	21, 23
Multi-Function Switch C2	BL	Right Side of Switch	21, 23
Natural Vacuum Leak Detection Assembly (2.0L/ 2.4L)	BK	On Fuel Tank	N/S
Negative Battery Cable	BK	Left Side Engine Compartment	5
Oil Pressure Switch (2.0L/ 2.4L)	LT/GN	Rear of Engine at Switch	18
Oil Pressure Switch (2.7L)	LT/GN	Rear of Engine at Switch	15
Output Speed Sensor	GY	Left Side of Transmission	10

CONNECTOR/GROUND/SPLICE LOCATION (Continued)

Connector Name/Number	Color	Location	Fig.
Overhead Map Courtesy Lamps	BK	At Lamp Assy	51
Oxygen Sensor 1/1 Right Bank Up (2.7)	BK	At Sensor	15, 20
Oxygen Sensor 1/1 Upstream (2.0L/2.4L)	BK	Rear of Engine	18, 19
Oxygen Sensor 1/2 Downstream (2.0L/2.4L)	BK	Rear of Engine	19
Oxygen Sensor 1/2 Right Bank Down (2.7L)	BK	Right Rear of Engine	20
Oxygen Sensor 2/1 Left Bank Up (2.7)	BK	At Sensor	15, 20
Oxygen Sensor 2/2 Left Bank Down (2.7)	BK	At Sensor	20
Park Brake Switch	NAT	Center of Body at Park Brake Lever	39
Park Lamp Relay (Premium)	NAT	Lower Center I/P	21
Passenger Airbag	YL	Right Side Instrument Panel	21, 33
Passenger Cylinder Lock Switch	GY	In Passenger Door	50
Passenger Door Lock Motor/Ajar Switch	BK	In Passenger Door	49, 50
Passenger Door Lock Switch	NAT	In Passenger Door	49, 50
Passenger Heated Seat Module		Under Passenger Seat	N/S
Passenger Power Window Motor	LT/GY	In Passenger Door	49, 50
Passenger Power Window Switch	BL	In Passenger Door	49, 50
Passenger Seat Belt Solenoid (Export)	BK	Under Passenger Seat	21, 38
Passenger Seat Belt Tensioner	YL	Under Passenger Seat (JR27) Near Belt Retractor (JR41)	21, 38
PCV Heater (2.7L)	BK	On PCV Valve	N/S
Power Amplifier C1 (Premium)	WT	Under Passenger Seat	21, 38
Power Amplifier C2 (Premium)	WT	Under Passenger Seat	21, 38
Power Antenna (Export)	BK	Right Trunk	52, 53
Power Distribution Center	BK	Left Front Engine Compartment	5, 8
Power Mirror Switch	BK	At Switch	21, 23
Power Outlet	BK	Rear of Outlet	N/S
Power Seat Circuit Breaker		In Junction Block	31
Power Seat Switch (JR27)	BK	At Switch	43
Power Seat Switch (JR41)	BL	At Switch	N/S
Power Steering Pressure Switch	BK	Left Side of Steering Gear	N/S
Power Top Pump Motor	RD	At Motor	41
Power Top Switch	GY	At switch on Center Console	N/S

CONNECTOR/GROUND/SPLICE LOCATION (Continued)

Connector Name/Number	Color	Location	Fig.
Power Top Up/Down Relays		At Relay	41
Powertrain Control Module C1 (2.0L/2.4L)	BK	At Module	5
Powertrain Control Module C1 (2.7L)	GY/ BK face	At Module	15
Powertrain Control Module C2 (2.0L/2.4L)	GY	At Module	5
Powertrain Control Module C2 (2.7L)	GY/ GY face	At Module	5
Powertrain Control Module C3 (2.0L/2.4L)	WT	At Module	5
Powertrain Control Module C4 (2.0L/2.4L)	GN	At Module	5
Radiator Fan	BK	Front Center of Engine Compartment	4
Radio C1	WT	Rear of Radio	21, 28
Radio C2	BK	Rear of Radio	N/S
Rear Floor Courtesy Lamp	BK	At Lamp	N/S
Rear Vertical Motor (Power Seat)	BK	Under Seat	44
Rear Window Defogger Feed		Left Side Shelf Panel	41, 42
Rear Window Defogger Ground		Right Side of Rear Window Defogger	N/S
Rear Window Defogger Relay		In Junction Block	31
Recirculation Door Actuator	BK	At Actuator, Right end of HVAC	35
Recline Motor (Power Seat)	GN	Under Driver Seat	N/S
Right Back-Up Lamp	GY	At Lamp	N/S
Right Curtain Airbag	YL	On Airbag Module At Headliner	45
Right Fog Lamp	GY	At Lamp	2
Right Front Door Speaker	BK	At Speaker	49, 50
Right Front Instrument Panel Speaker	BK	At Speaker	21, 26
Right Front Wheel Speed Sensor	BK	Right Fender Side Shield	3
Right Headlamp (Except Export)	BK	At Right Headlamp Opening	1, 2
Right Lavalier Module (Export)	BK	At Right Headlamp Opening	1
Right License Lamp	NAT	At Lamp	N/S
Right Park/Turn Signal Lamp (Except Export)	BK	Right Headlamp Opening	1, 2
Right Power Mirror	NAT	At Mirror	49, 50
Right Rear Door Lock Motor/Ajar Switch	BK	In Door near Latch	48
Right Rear Fog Lamp (Export)	BK	At Lamp	N/S
Right Rear Power Window Motor (JR41)	BK	At Motor	48

CONNECTOR/GROUND/SPLICE LOCATION (Continued)

Connector Name/Number	Color	Location	Fig.
Right Rear Power Window Switch (JR41)	BK	At Switch	48
Right Rear Speaker (JR41)	BK	At Speaker	45
Right Rear Speaker (JR27)	BK	At Speaker see left speaker	N/S
Right Rear Wheel Speed Sensor	BK	Right Side Trunk Area	46
Right Remote Radio Switch		Under Horn Pad	30
Right Side Impact Sensor	YL	At B Post	N/S
Right Speed Control Switch	BK	Under Horn Pad	30
Right Tail/Side Marker Lamp	BK	At Lamp	N/S
Right Tail/Stop Lamp	GY	At Lamp	N/S
Right Tail/Turn Signal Lamp	GY	At Lamp	N/S
Right Turn Lamp	TN	At Lamp	N/S
Right Visor/Vanity Lamps	BK	At Lamp	37, 51
Seat Belt Control Module (Export)	NAT	Under Driver Seat	N/S
Sentry Key Immobilizer Module	BK	At Steering Column	21, 23
Starter		Lower Front of Engine	10
Sunroof Control Module	WT	In Left Headliner	51
Sunroof Switch	NAT	In Left Headliner	51
Sun Sensor (ATC)	BK	Center I/P	27
Throttle Position Sensor (2.0L/2.4L)	NAT	On Throttle Body	13
Throttle Position Sensor (2.7L)	BK	On Throttle Body	15
Traction Control Switch		On Top of Steering Column	21, 23
Transmission Control Module	BK	Left Front Engine Compartment	4
Transmission Range Indicator Illumination (PRNDL)	BR	Center of Body Near Shifter Assembly	39
Transmission Range Sensor	DK/GY	Left Side of Transmission	10
Transmission Solenoid/ Pressure Switch Assembly	BK	Left Side of Transmission	10
Trunk Lamp	BK	Rear Center Shelf Panel	45
Vehicle Speed Control Servo	BK	Left Side of Engine Compartment at Servo	5
Vehicle Speed Sensor (MTX)	BK	Right Side of Transmission	11
Window Drop Relay Assembly		In Driver Door	N/S

CONNECTOR/GROUND/SPLICE LOCATION (Continued)

GROUNDS

Connector Name/Number	Location	Fig.
G100	Left Strut Tower	5
G103	Near Left Strut Tower	5
G104 (2.7L)	Near EGR Solenoid	15
G106	Right Headlamp Area	1
G108	Left Headlamp Area	4
G113	Left Headlamp Area	4
G201	Center Body Between Occupant Restraint Controller and Shift Assembly	21, 38
G202	Lower Left Center Instrument Panel	21, 22
G203	Left Side Instrument Panel	21, 22
G204	On Steering Colum harness	30
G300	Center of Trunk Opening Below Latch	47
G301	Left Side Cowl	40
G302	Left Front of Trunk	56
G303	Right Front Side of Trunk	52
G310	Rear Center Decklid	55

SPLICES

Splice Number	Location	Fig.
S100(ATX)	Left Front Engine Compartment	4
S102	Internal to the Power Distribution Center	5
S103	Internal to the Power Distribution Center	5
S104	Internal to the Power Distribution Center	5
S105	Internal to the Power Distribution Center	5
S106	Internal to the Power Distribution Center	5
S108	Internal to the Power Distribution Center	5
S109	Internal to the Power Distribution Center	5
S110	Left Side Engine Compartment	5
S111	Left Front Engine Compartment	4
S112 (ATX)	Internal to the Power Distribution Center	5
S113 (2.7L)	In T/O for Starter Feed Terminal	10
S115	Near T/O for MAP/IAT Sensor	13, 14
S116	Near T/O for A/C Compressor Clutch	N/S
S117	Near T/O for Camshaft Position Sensor	14
S118 (2.7L)	Near T/O for Oxygen Sensor 2/1 Left Bank Up	N/S
S119 (Export)	Internal in Power Distribution Center	N/S
S120	Left Front Kick Panel	32
S121	Near T/O for Powertrain Control Module C1	14
S122	Internal to Power Distribution Center	5
S123	Left Front Engine Compartment	4

CONNECTOR/GROUND/SPLICE LOCATION (Continued)

Splice Number	Location	Fig.
S124	Near T/O for Camshaft Position Sensor	14
S125	Near A/T inline Connectors	10
S126	Left Front Engine Compartment	4
S127	Left Front Engine Compartment	4
S134	Near T/O for Camshaft Position Sensor	14
S135	Near T/O for Power Steering Pressure Switch	N/S
S137 (2.7L)	Near T/O for Oxygen Sensor 1/1 Right Bank Up	N/S
S139 (2.7L)	Near T/O for Knock Sensor	N/S
S143 (2.7L)	Left Fuel Rail	N/S
S148 (2.0L/2.4L)	Near T/O For Ignition Coil Pack	14
S149 (2.7L)	Near T/O For Generator Feed	N/S
S150 (2.0L/2.4L)	Near T/O for Powertrain Control Module C1	14
S155	Near T/O for Camshaft Position Sensor	15
S156	Near T/O for A/C Compressor Clutch	15
S200	Between A/C Evap Temperature Sensor & Blend Door Actuator	34
S201	Between Blend Door Actuator and Mode Door Actuator	N/S
S202	Between Blend Door Actuator and Mode Door Actuator	N/S
S203	Center of Instrument Panel, Near Take-out for Data Link Connector	N/S
S207	Left Side of Instrument Panel	21, 22
S208 (Export)	Left Side of Instrument Panel	21, 22
S209	Left Center of Instrument Panel	21, 22
S210	Left Center of Instrument Panel	21, 22
S211	Left Center of Instrument Panel	21, 22
S212	Left Center of Instrument Panel	21, 22
S214	Right Center of Instrument Panel	21, 22
S215	Left Side of Instrument Panel	21
S216	Under Horn Pad	30
S217	Under Horn Pad	30
S218	Under Horn Pad	30
S219	Under Horn Pad	30
S220	Near Brake Trans. Shift Interlock Solenoid	21
S221	Near Junction Block C4, & C5	21, 32
S222	Next to S207	21, 32
S223	Near Body Control Module C3 & C4	21, 32
S224	Near Sentry Key Immobilizer Module	21
S225	Near Fog Lamp Relay	22
S226	Near Data Link Connector	21
S227	Near Junction Block C4 & C5	32
S228	Near Fog Lamp Relay	22
S301	Front Left Center of Trunk	N/S
S302	Between Automatic Day/Night Mirror and Left Visor/Vanity Lamp	37

CONNECTOR/GROUND/SPLICE LOCATION (Continued)

Splice Number	Location	Fig.
S303	Near Splice S302 on Mirror Side	N/S
S304	Between Left Tail/Stop Lamp and Left Turn Lamp	N/S
S305	Between Right Tail/Stop Lamp and Right Turn Lamp	N/S
S306	Near Rear Window Defogger	41
S307	Near C320	N/S
S310	2.4″(60mm)Toward Passenger Heated Seat Module, from Harness tie down	N/S
S311	Near Passenger Heated Seat Module	N/S
S313	Center Body Floor Between Airbag Module and Shifter Assembly	39
S318	Near T/O for Left Tail/Stop Lamp	N/S
S319	Near T/O for Right Tail/Stop Lamp	N/S
S320	In Driver Door	49
S321	In Passenger Door	49
S324	In Rear Fog Lamp Harness	N/S
S326	Near Fuel Pump Module	N/S
S327 (JR27)	In Driver Door	49
S327 (JR41)	Driver Door Forward From Take-out for Power Window and Power Mirror Switches	N/S
S330	In Driver Door	49
S331	Between T/O for C320 & T/O For License Lamp	N/S
S332	Near Left License Lamp	N/S
S333 (JR27)	Between Left Rear Fog Lamp & Right Rear Fog Lamp	N/S
S334	Near Left Rear Fog Lamp	N/S
S335 (JR41)	Near Left/Right License Lamp	N/S
S336 (JR41)	Near Left/Right License Lamp	N/S

CONNECTOR/GROUND/SPLICE LOCATION (Continued)

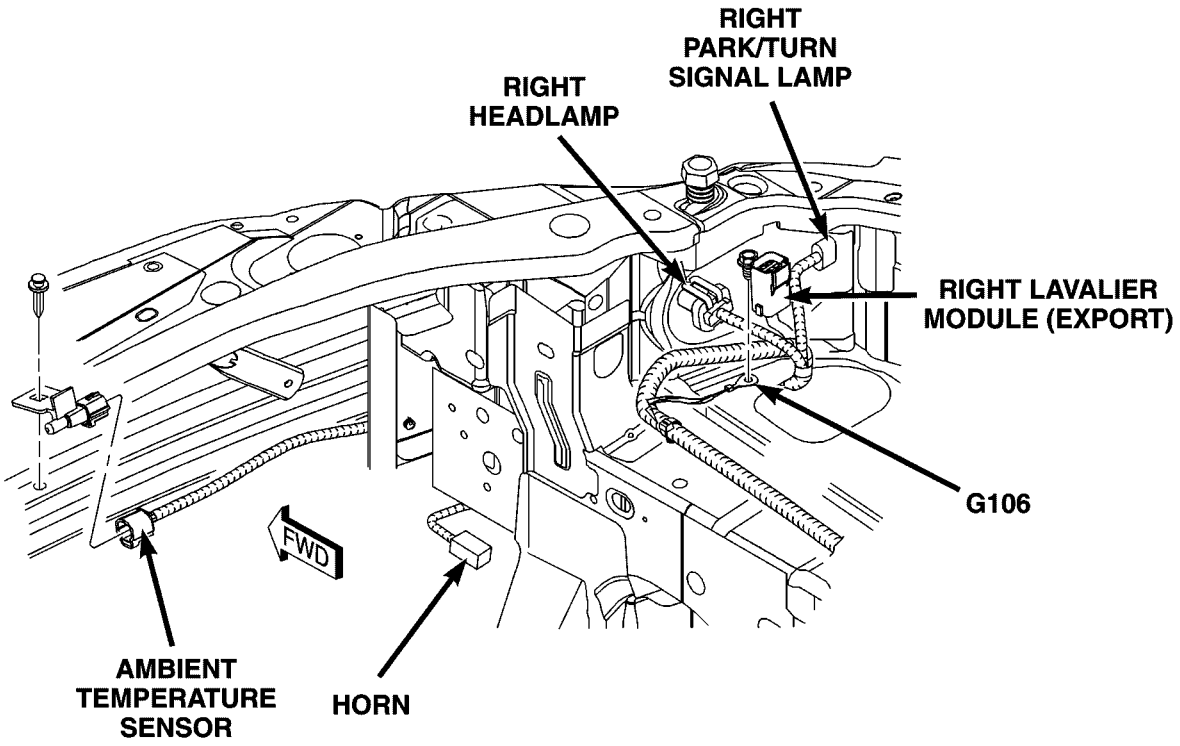

80f7dca0

Fig. 1 RIGHT HEADLAMP CONNECTORS

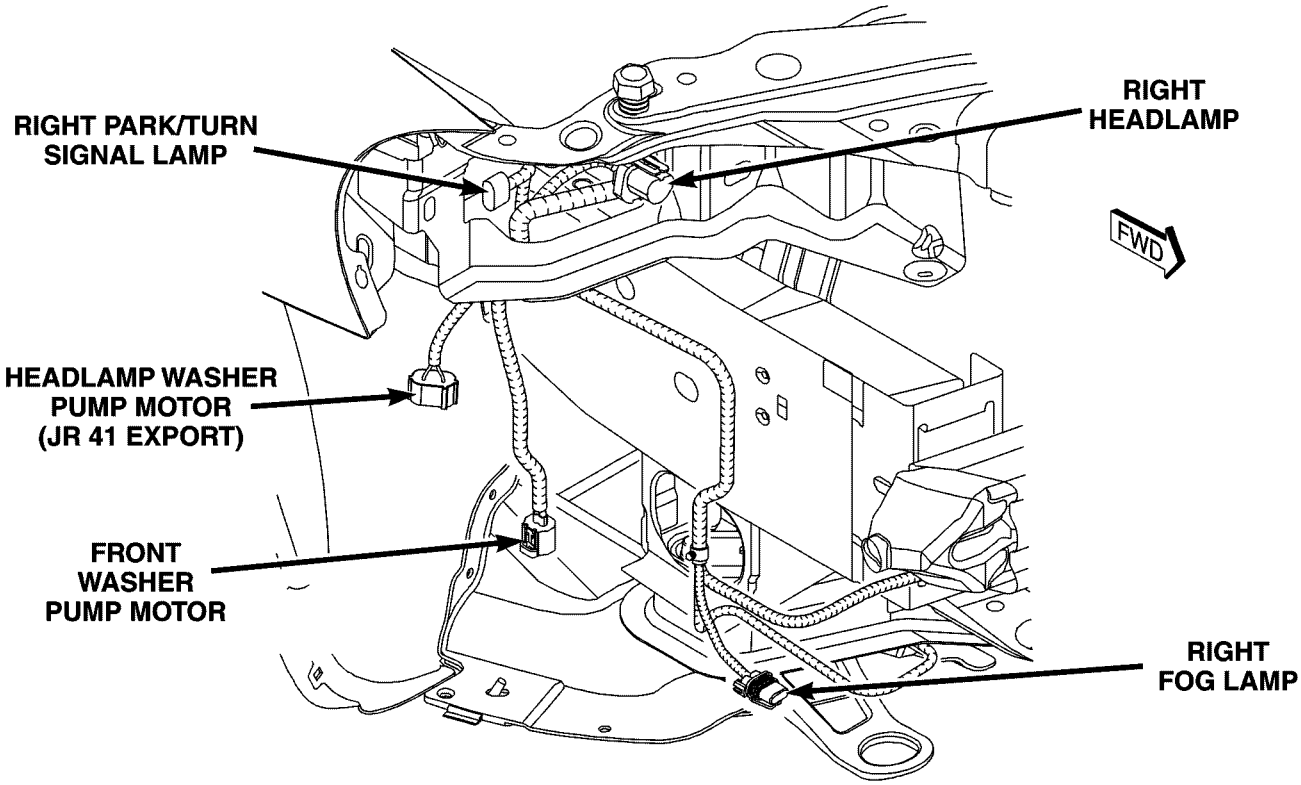

80f7dcc6

Fig. 2 RIGHT FRONT LIGHTING CONNECTORS

CONNECTOR/GROUND/SPLICE LOCATION (Continued)

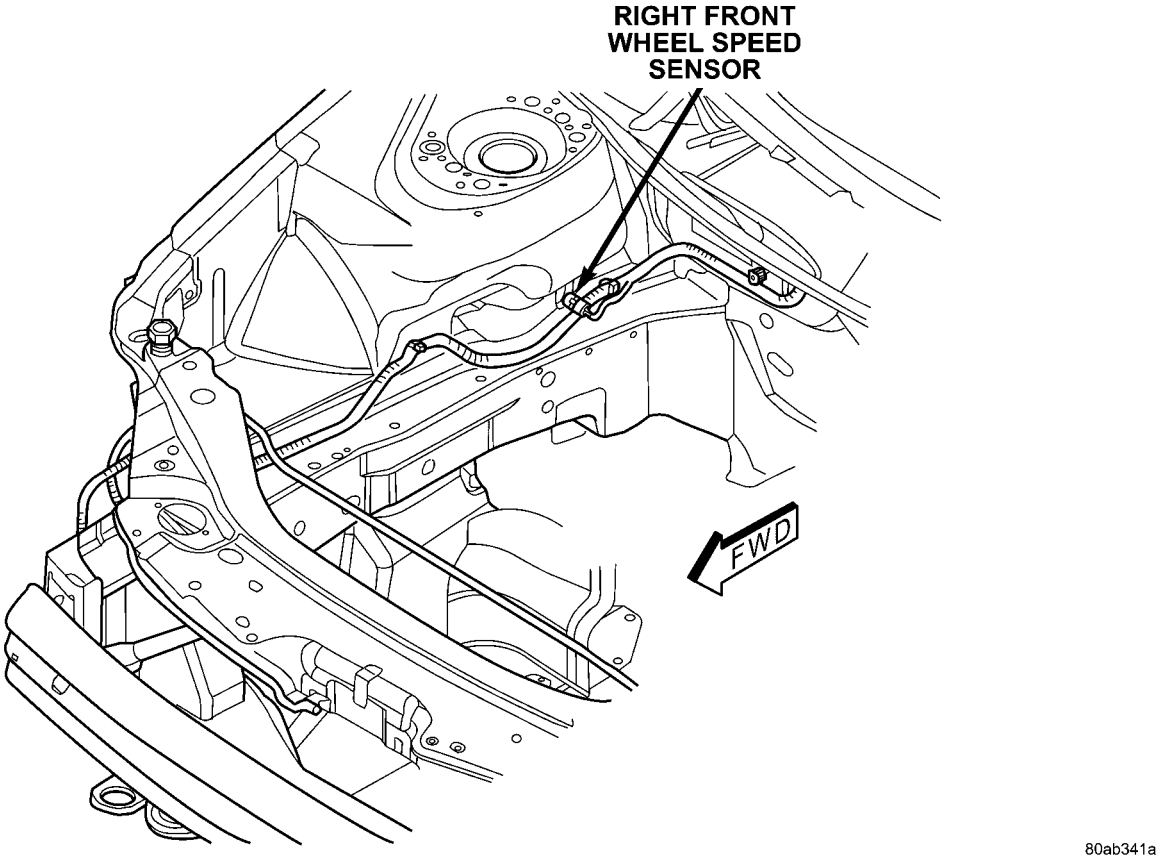

Fig. 3 RIGHT SIDE ENGINE COMPARTMENT CONNECTORS

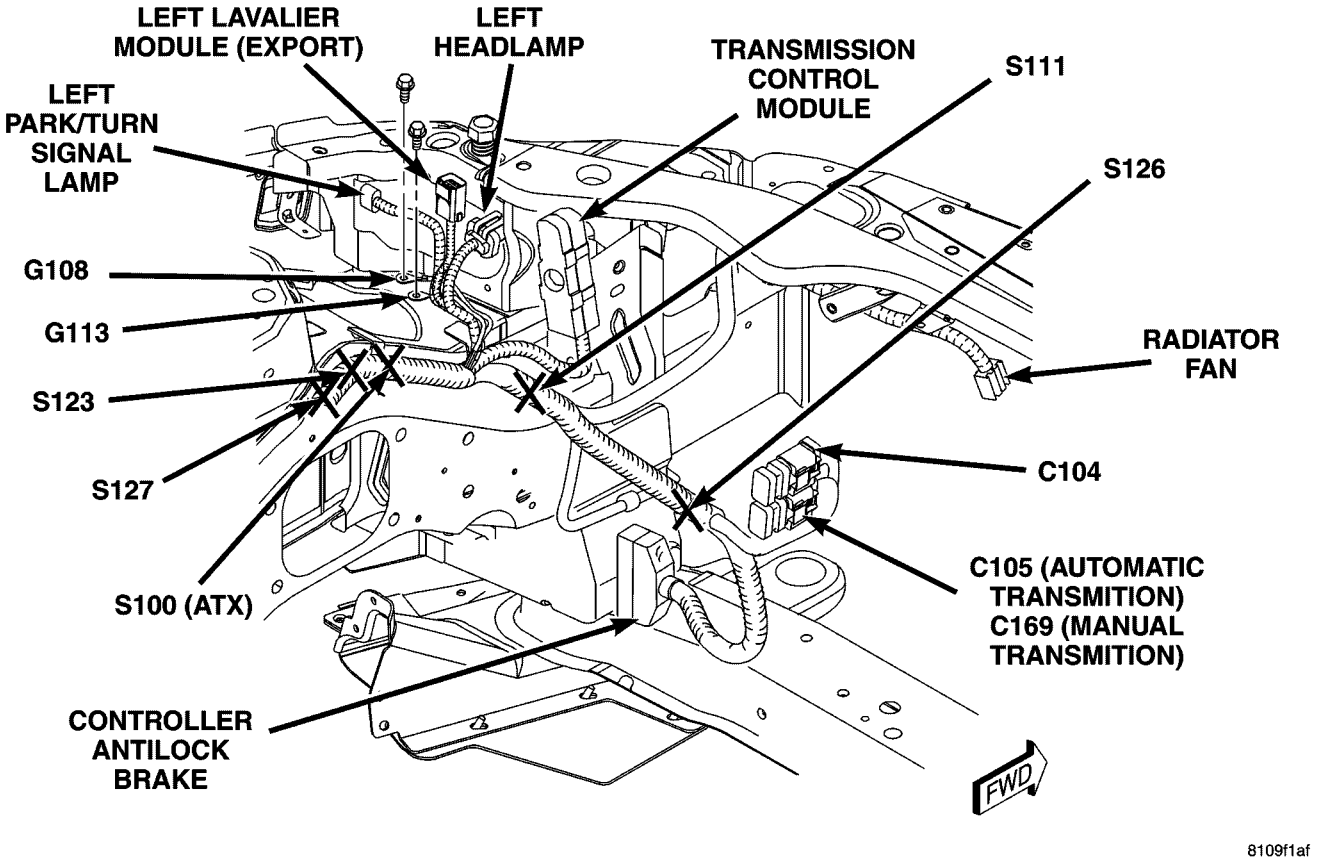

Fig. 4 LEFT FRONT ENGINE COMPARTMENT CONNECTORS

CONNECTOR/GROUND/SPLICE LOCATION (Continued)

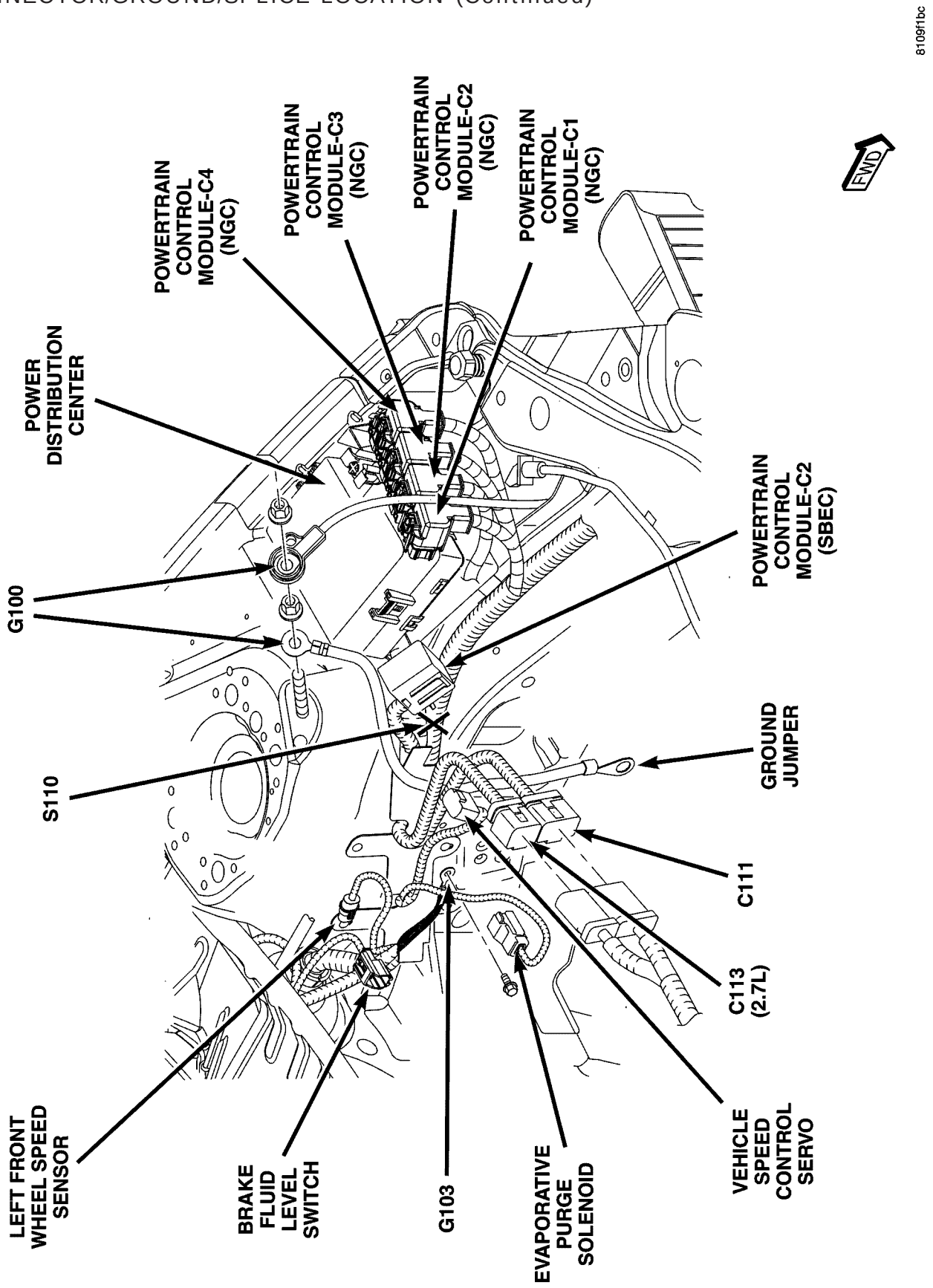

Fig. 5 LEFT SIDE ENGINE COMPARTMENT CONNECTORS

CONNECTOR/GROUND/SPLICE LOCATION (Continued)

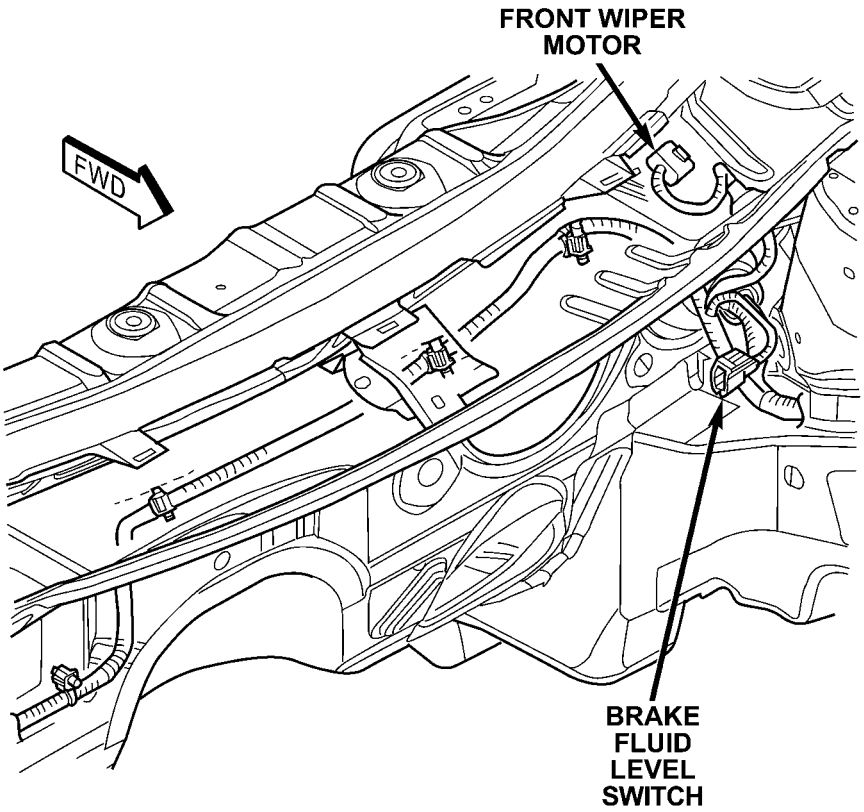

80ab3432

Fig. 6 LEFT REAR ENGINE COMPARTMENT CONNECTORS

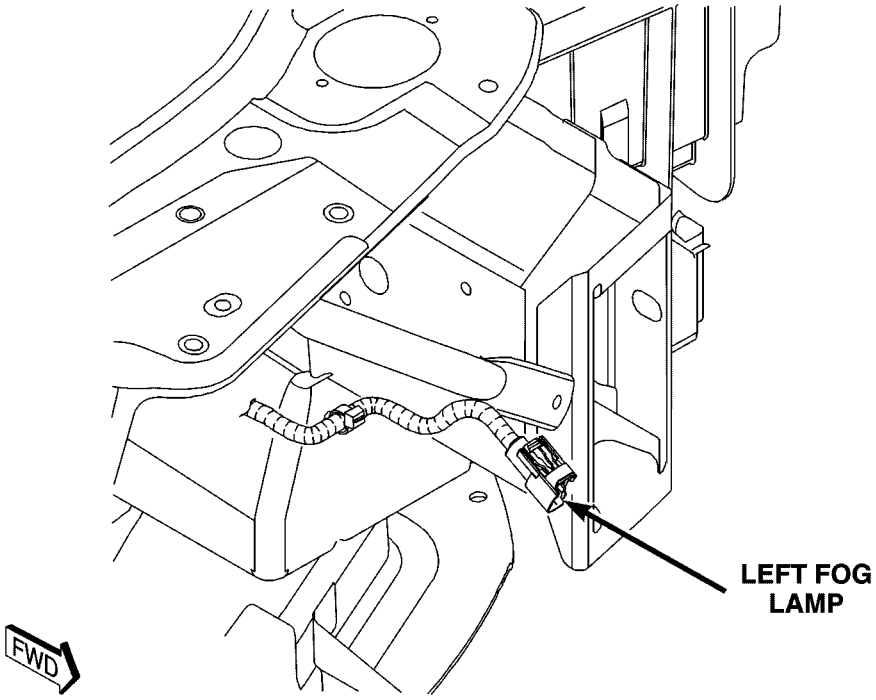

80f7dd1b

Fig. 7 LEFT FOG LAMP

CONNECTOR/GROUND/SPLICE LOCATION (Continued)

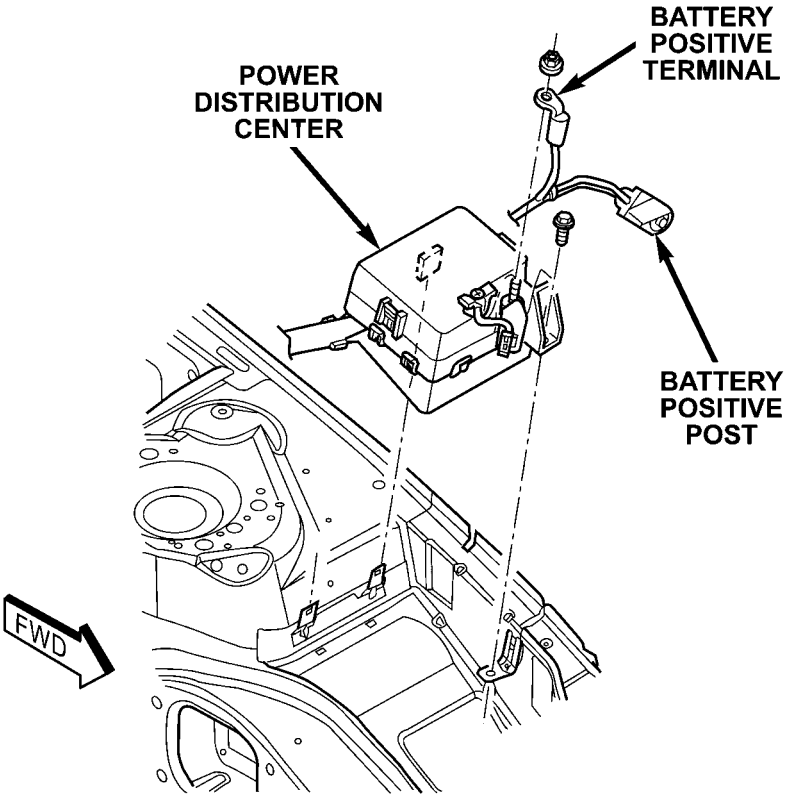

80ab345b

Fig. 8 POWER DISTRIBUTION CENTER

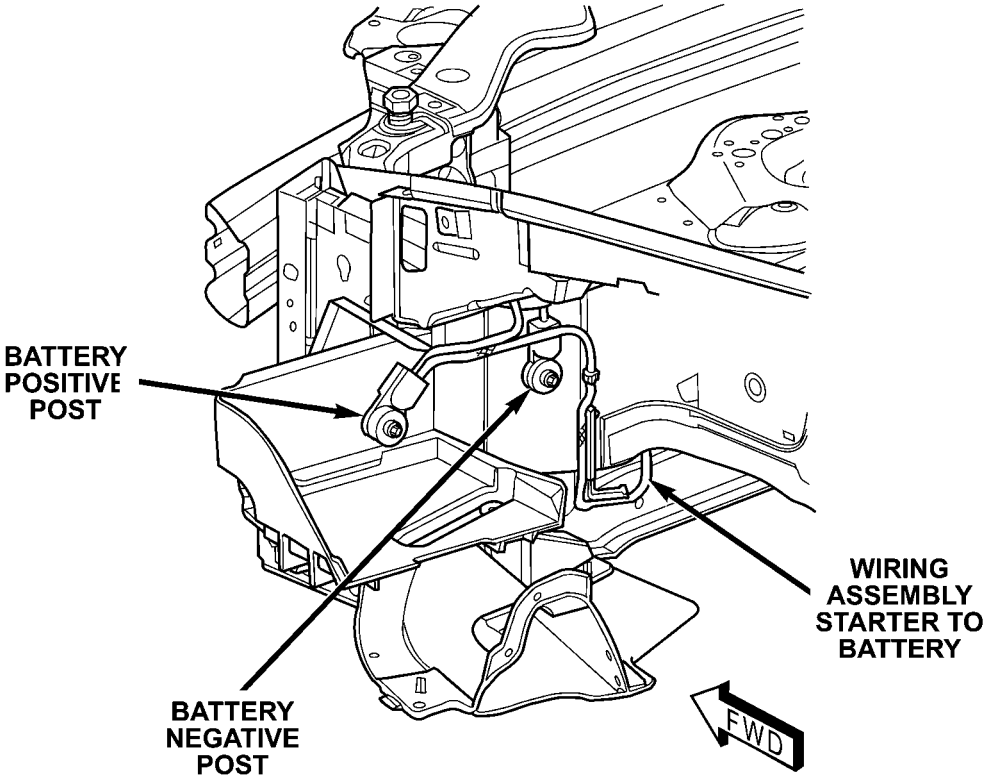

80ab3463

Fig. 9 BATTERY CABLE CONNECTORS

CONNECTOR/GROUND/SPLICE LOCATION (Continued)

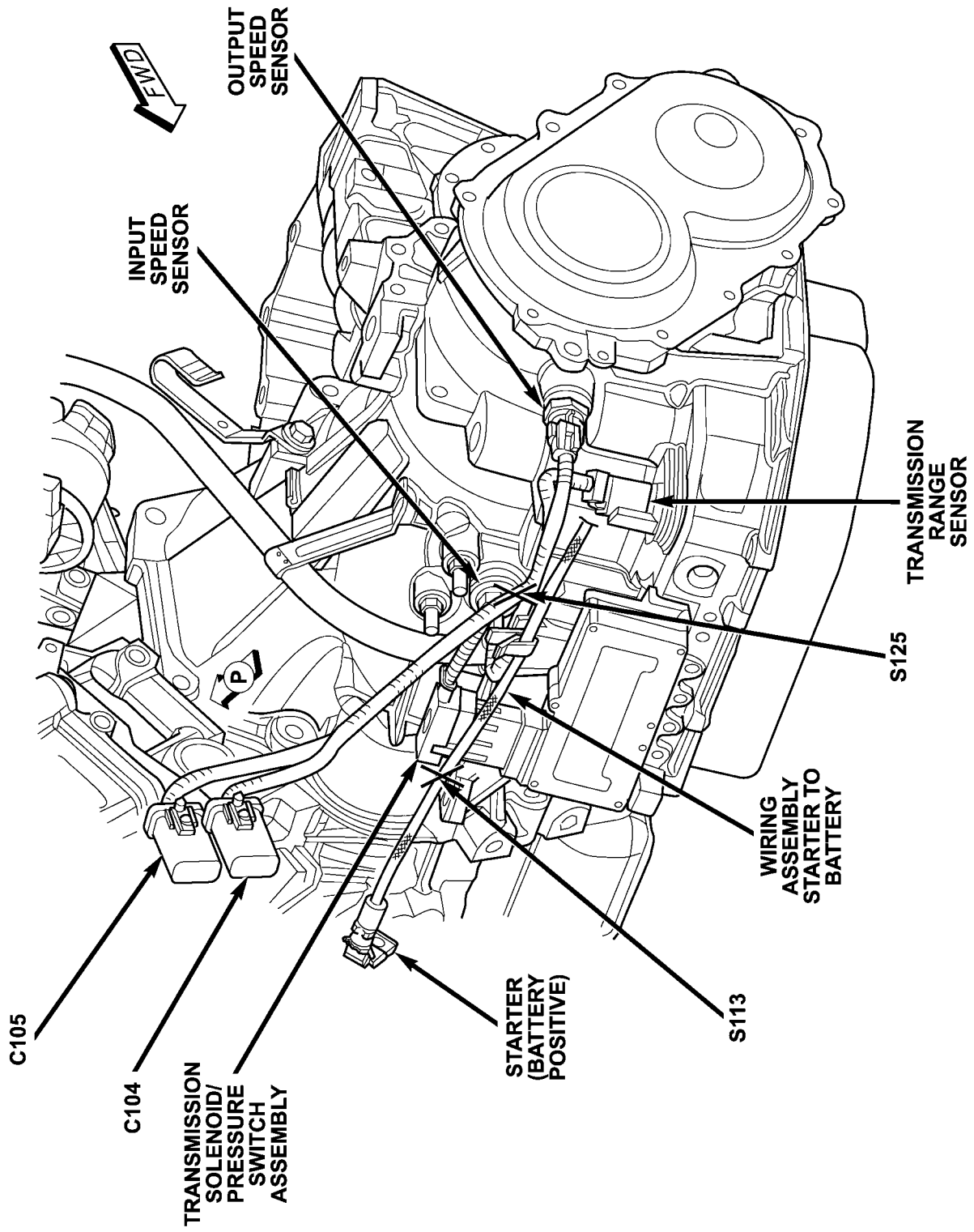

Fig. 10 AUTOMATIC TRANSMISSION CONNECTORS

CONNECTOR/GROUND/SPLICE LOCATION (Continued)

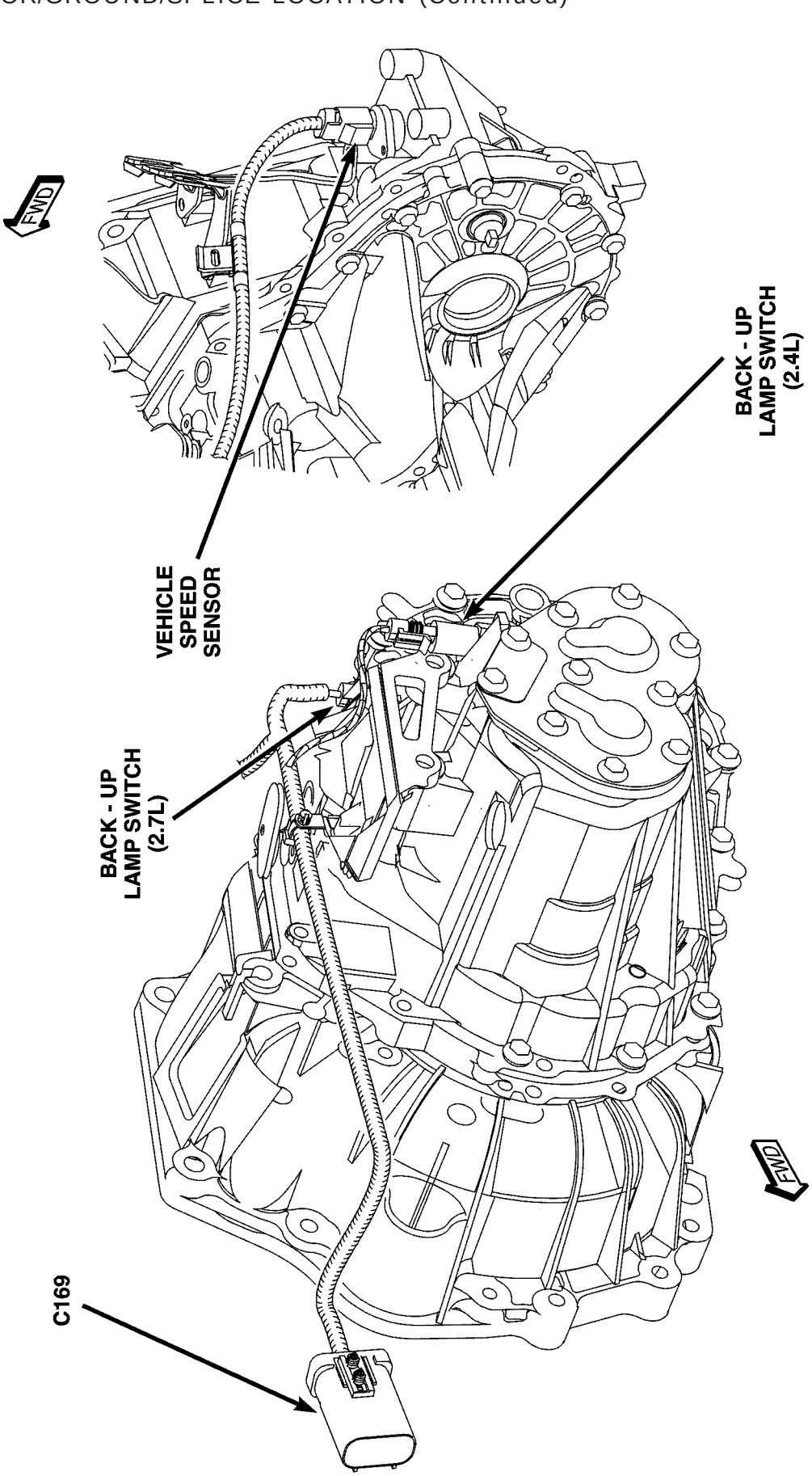

Fig. 11 MANUAL TRANSMISSION CONNECTORS

CONNECTOR/GROUND/SPLICE LOCATION (Continued)

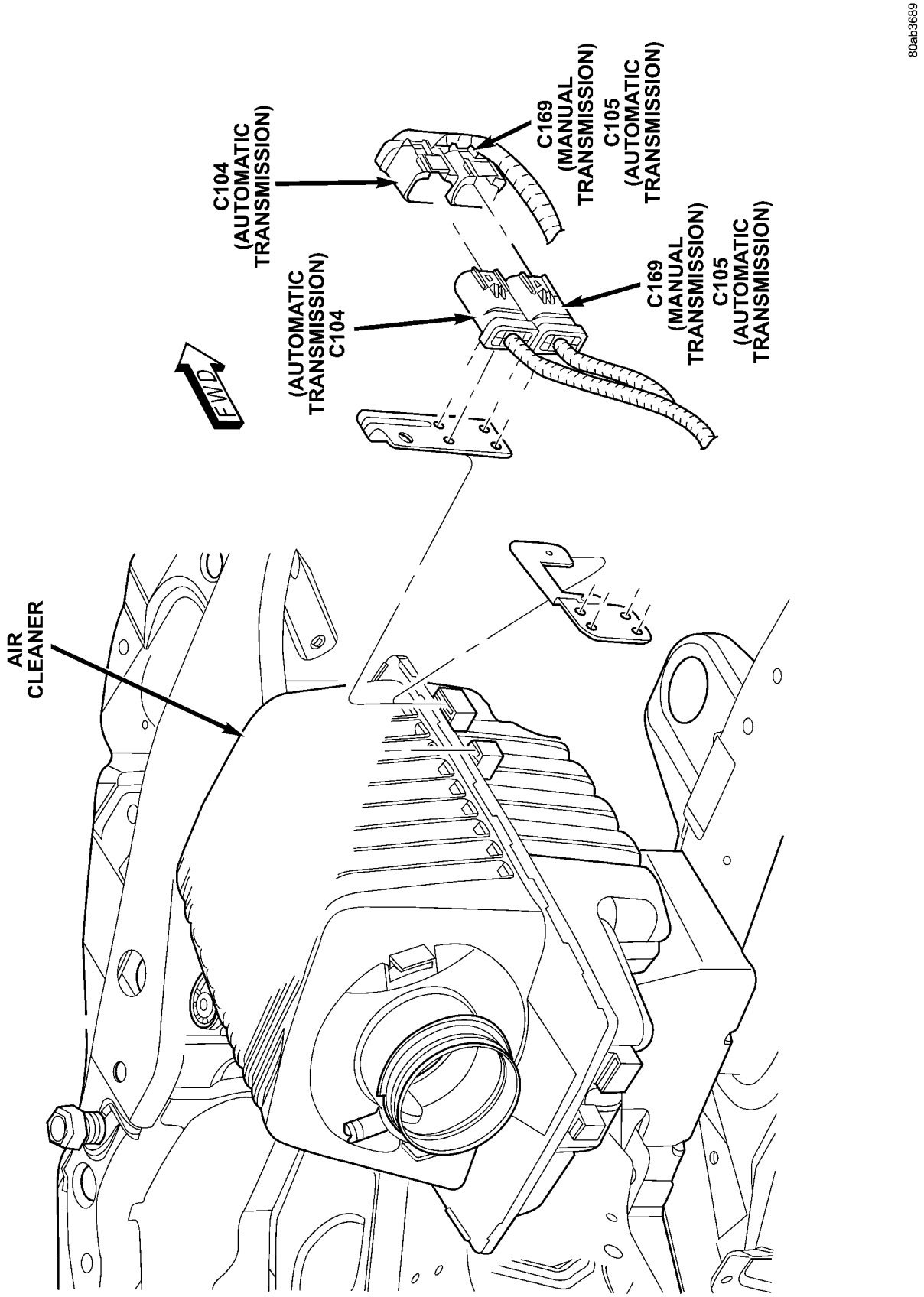

Fig. 12 TRANSMISSION INLINE CONNECTORS

CONNECTOR/GROUND/SPLICE LOCATION (Continued)

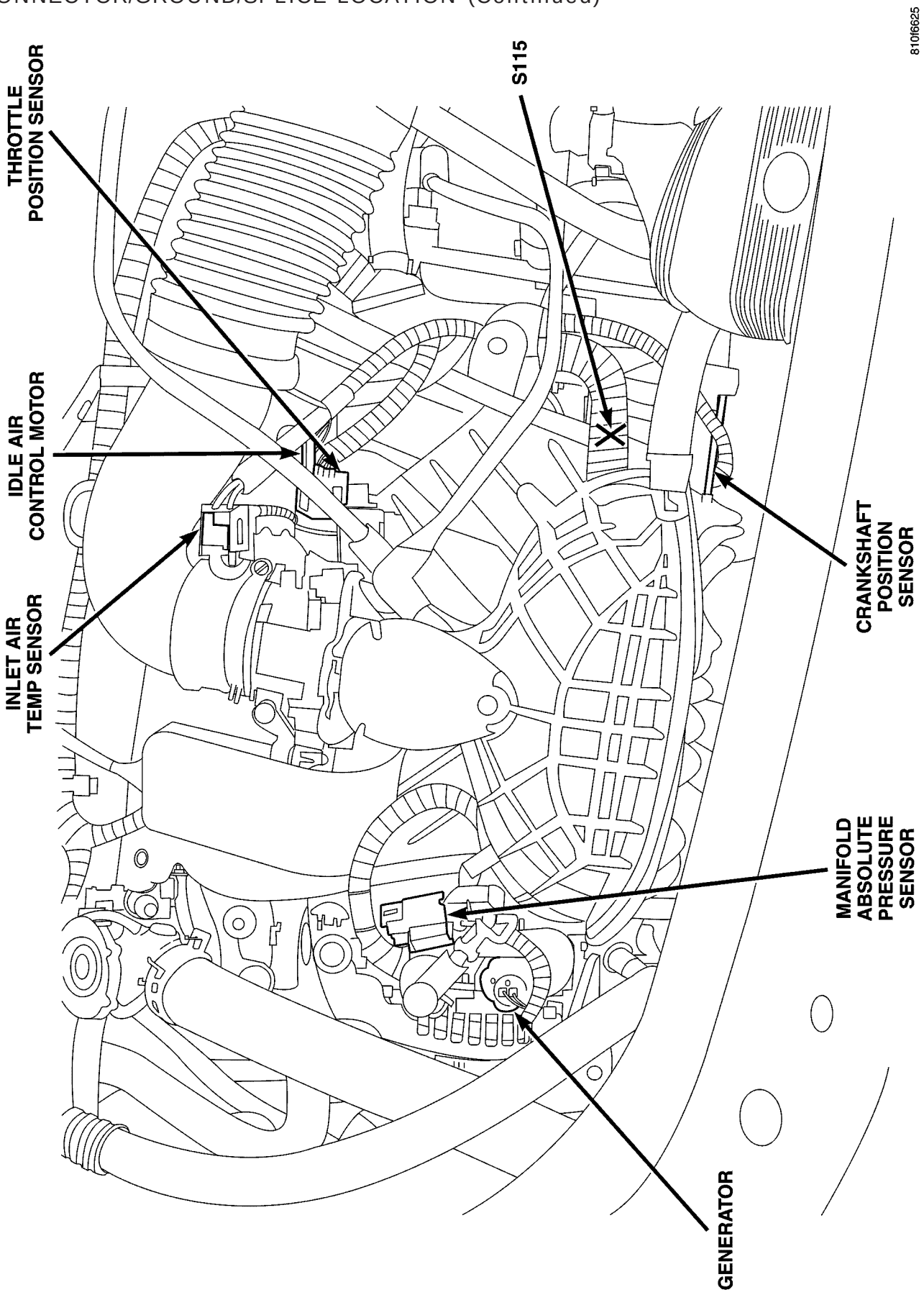

Fig. 13 ENGINE FRONT CONNECTORS 2.0L/2.4L

CONNECTOR/GROUND/SPLICE LOCATION (Continued)

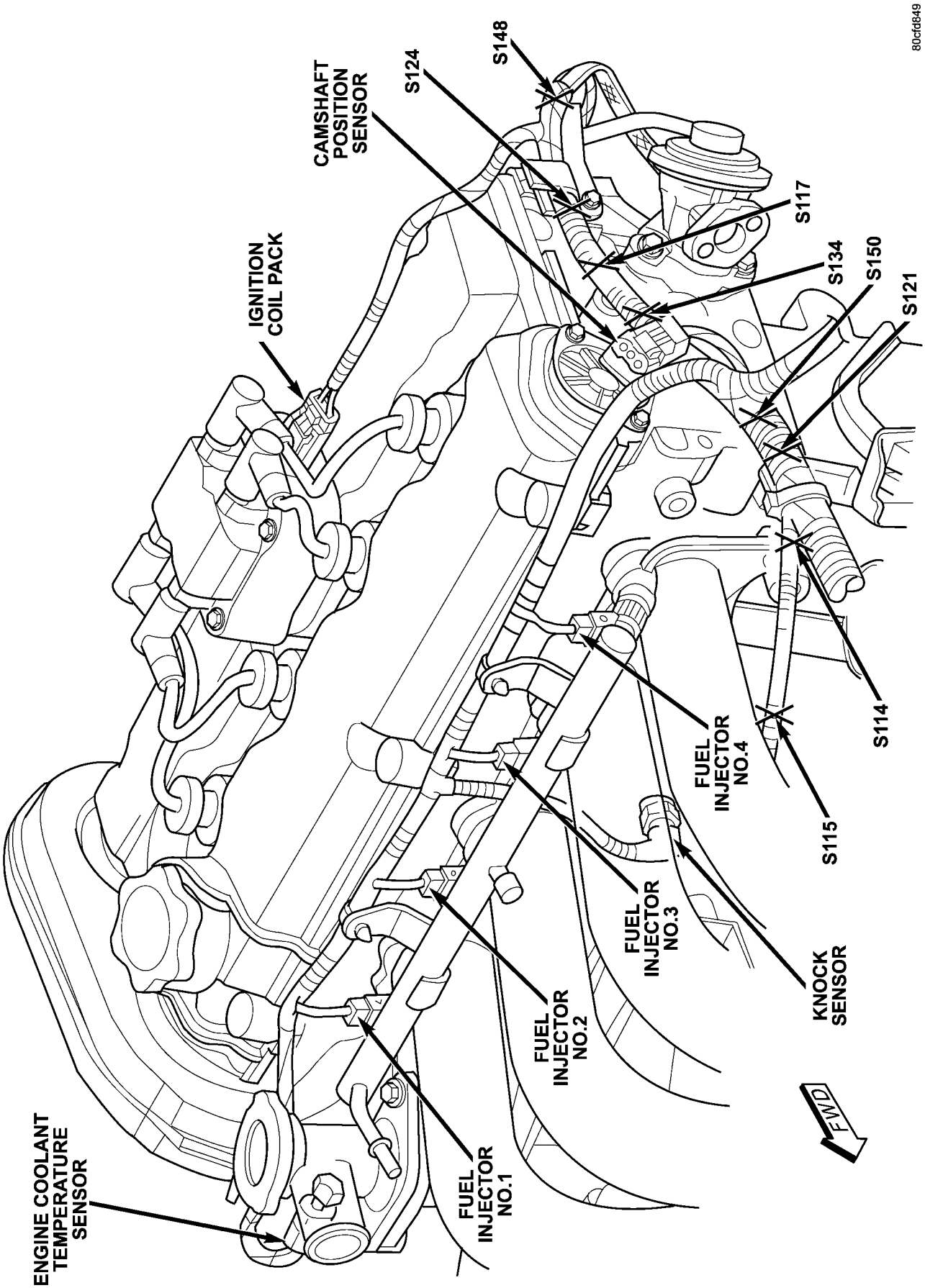

Fig. 14 FUEL INJECTOR CONNECTORS 2.0L/2.4L

CONNECTOR/GROUND/SPLICE LOCATION (Continued)

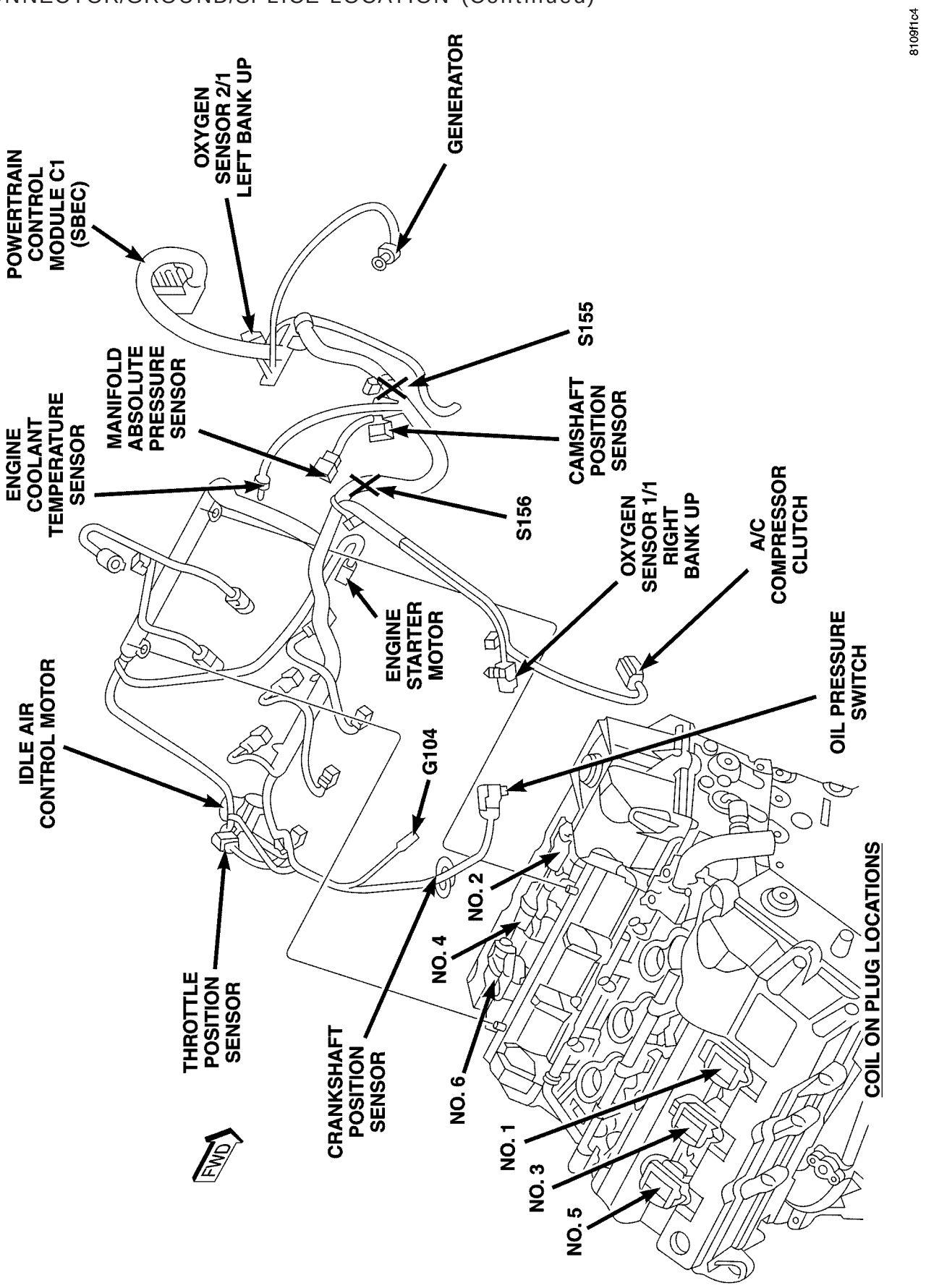

Fig. 15 ENGINE CONNECTORS 2.7L

CONNECTOR/GROUND/SPLICE LOCATION (Continued)

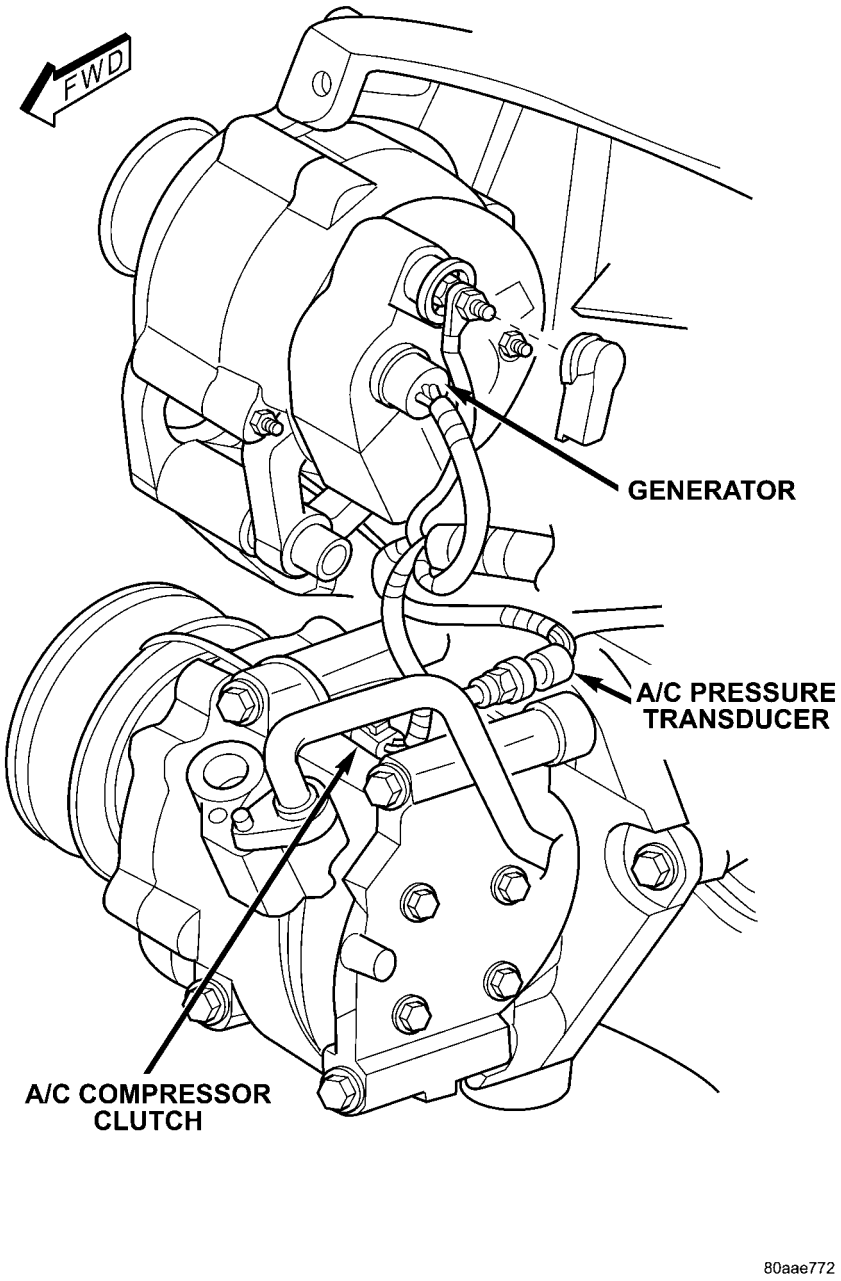

Fig. 16 GENERATOR AND A/C CONNECTORS

CONNECTOR/GROUND/SPLICE LOCATION (Continued)

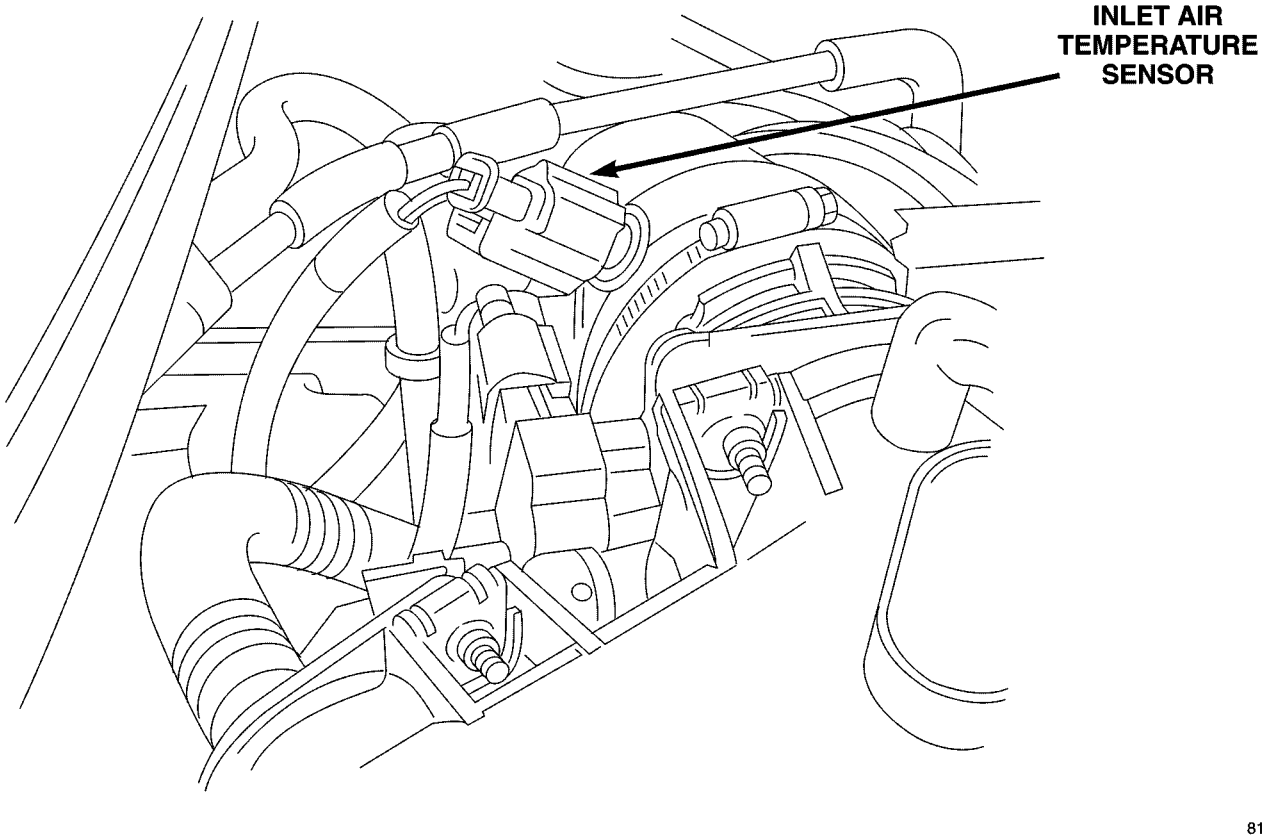

Fig. 17 INLET AIR TEMPERATURE SENSOR 2.7L

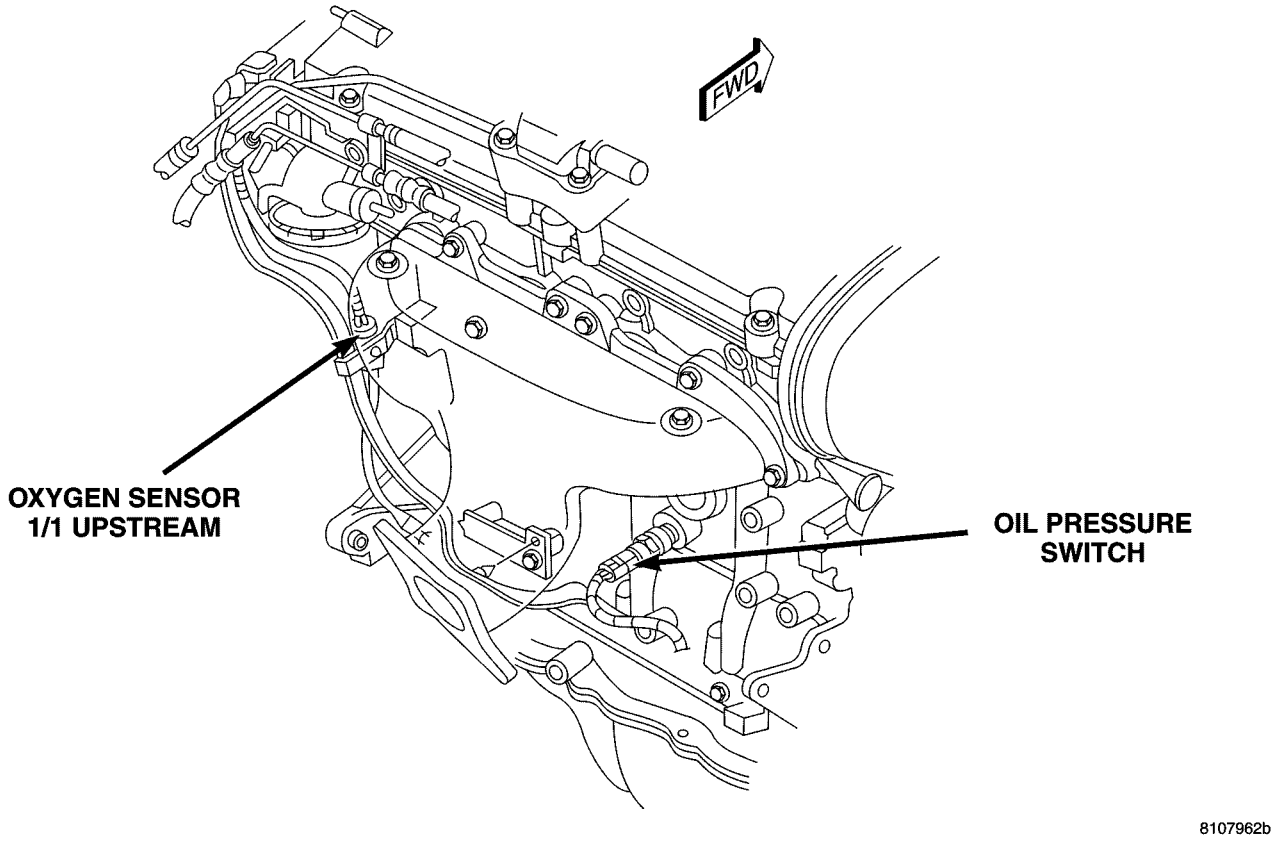

Fig. 18 REAR ENGINE CONN 2.0L/2.4L

CONNECTOR/GROUND/SPLICE LOCATION (Continued)

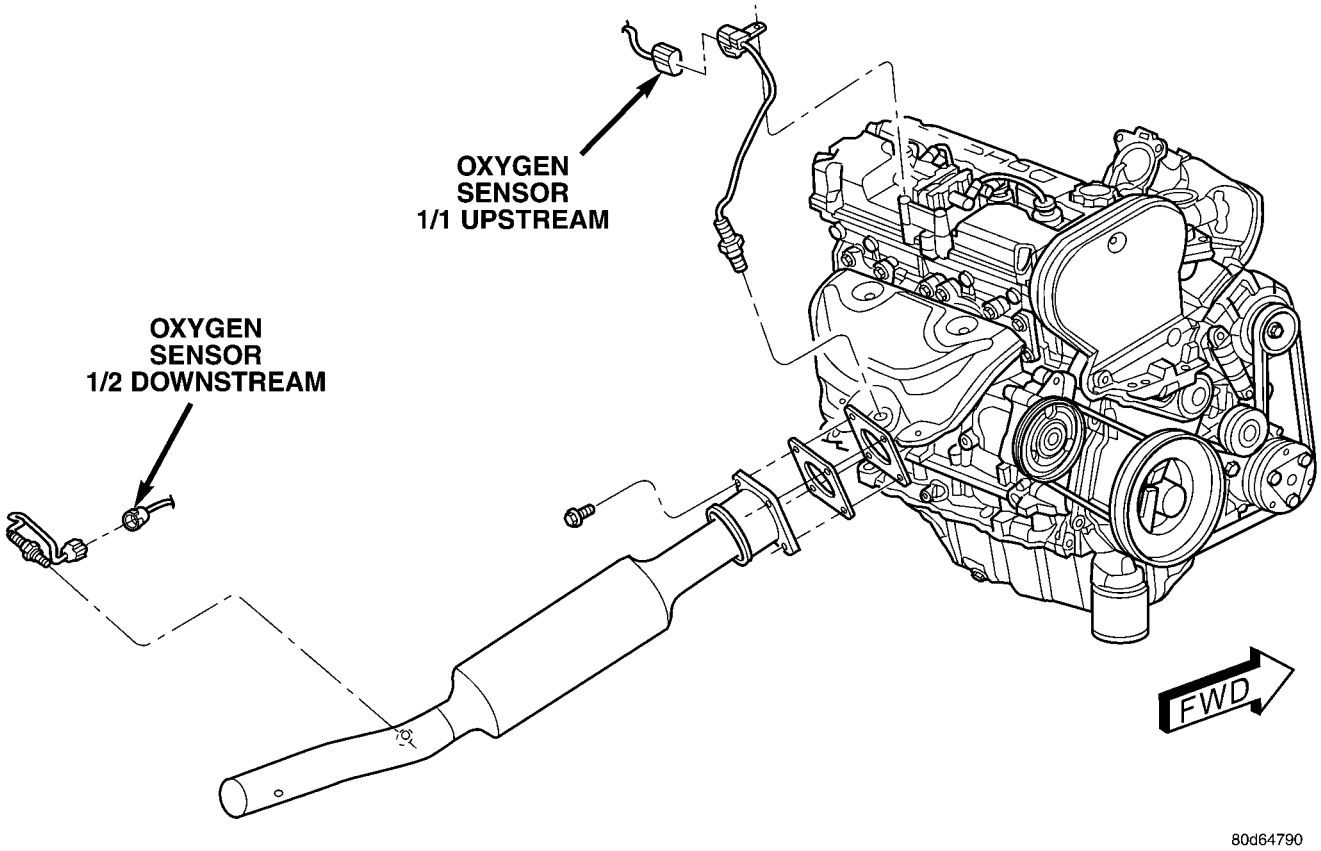

Fig. 19 OXYGEN SENSORS 2.0L/2.4L

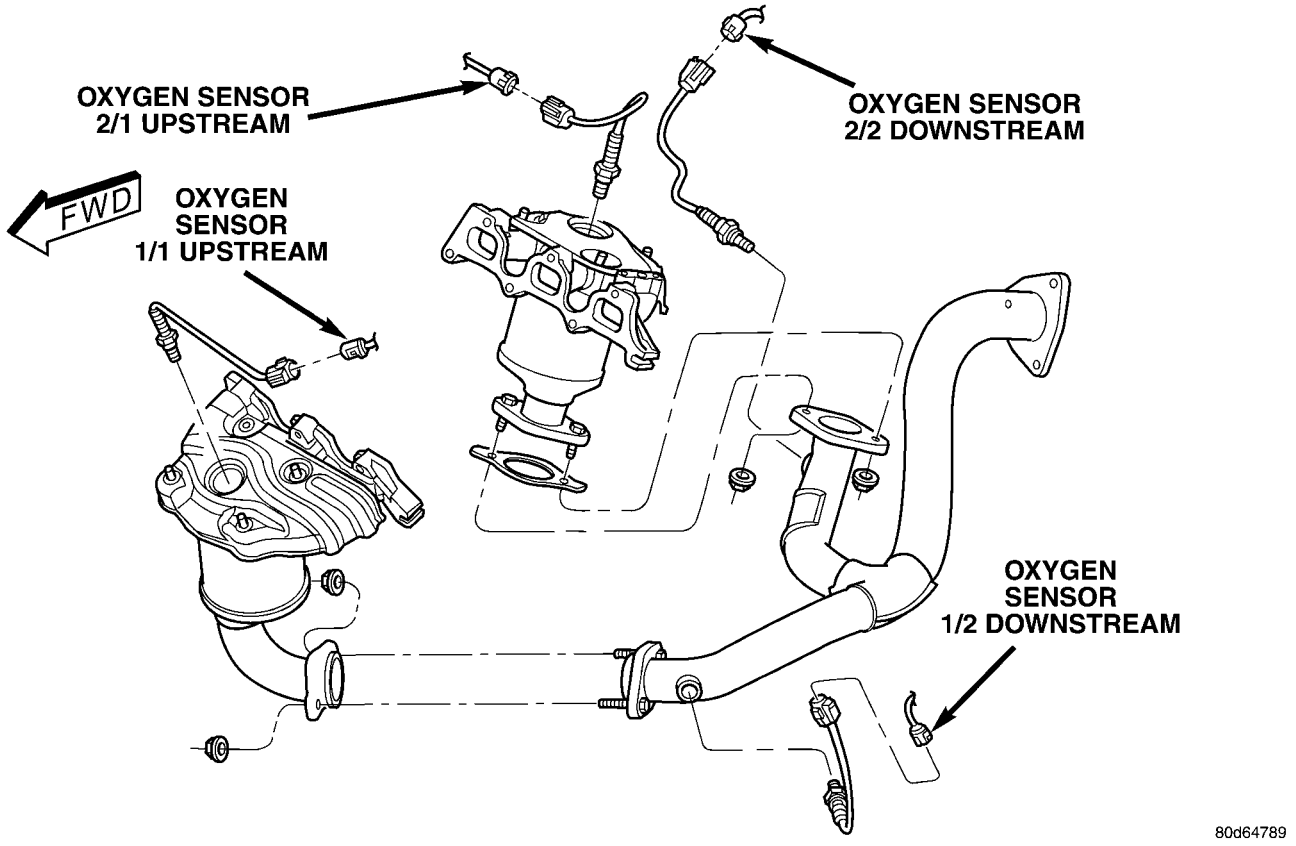

Fig. 20 OXYGEN SENSORS 2.7L

CONNECTOR/GROUND/SPLICE LOCATION (Continued)

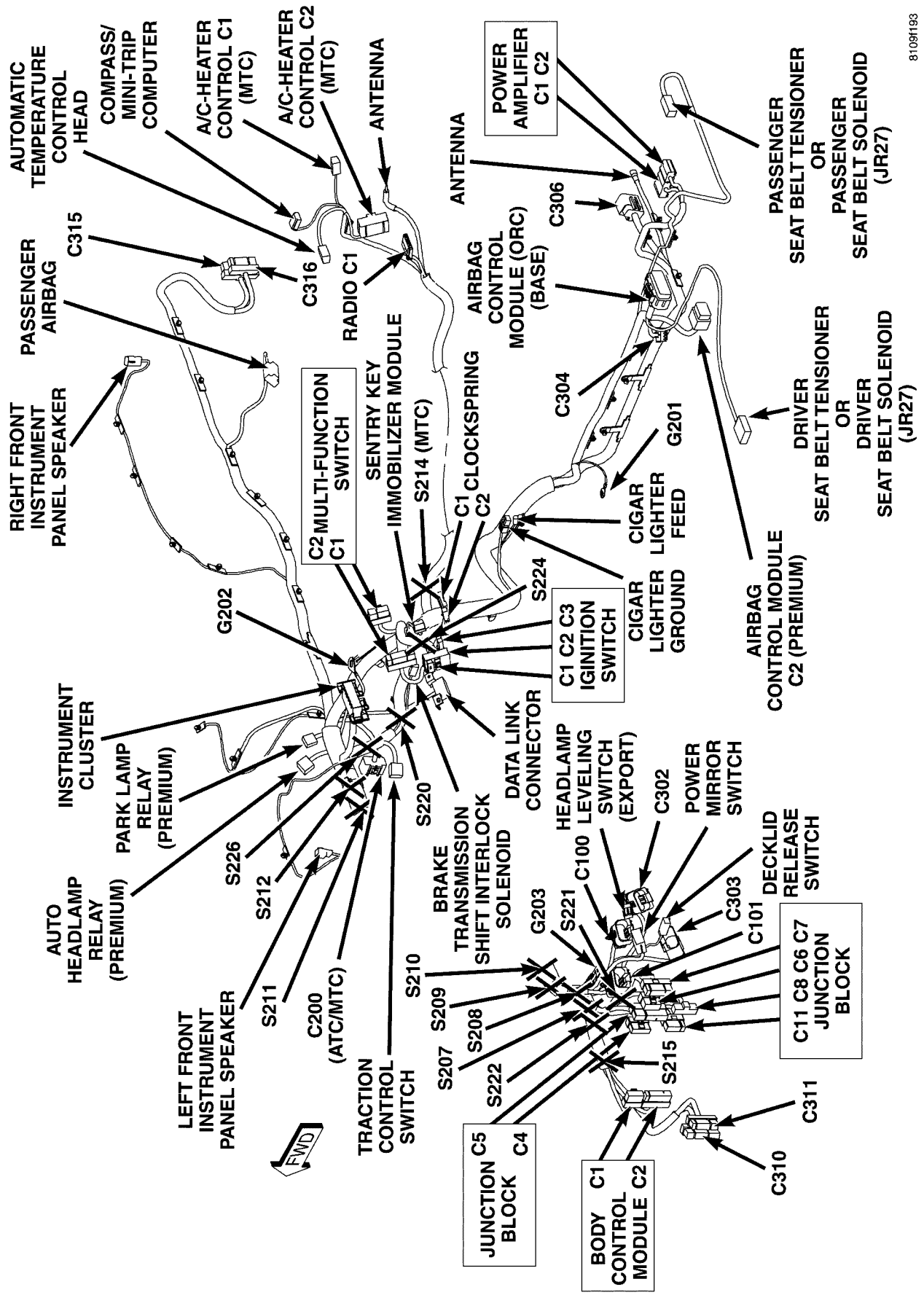

Fig. 21 INSTRUMENT PANEL HARNESS CONNECTORS

CONNECTOR/GROUND/SPLICE LOCATION (Continued)

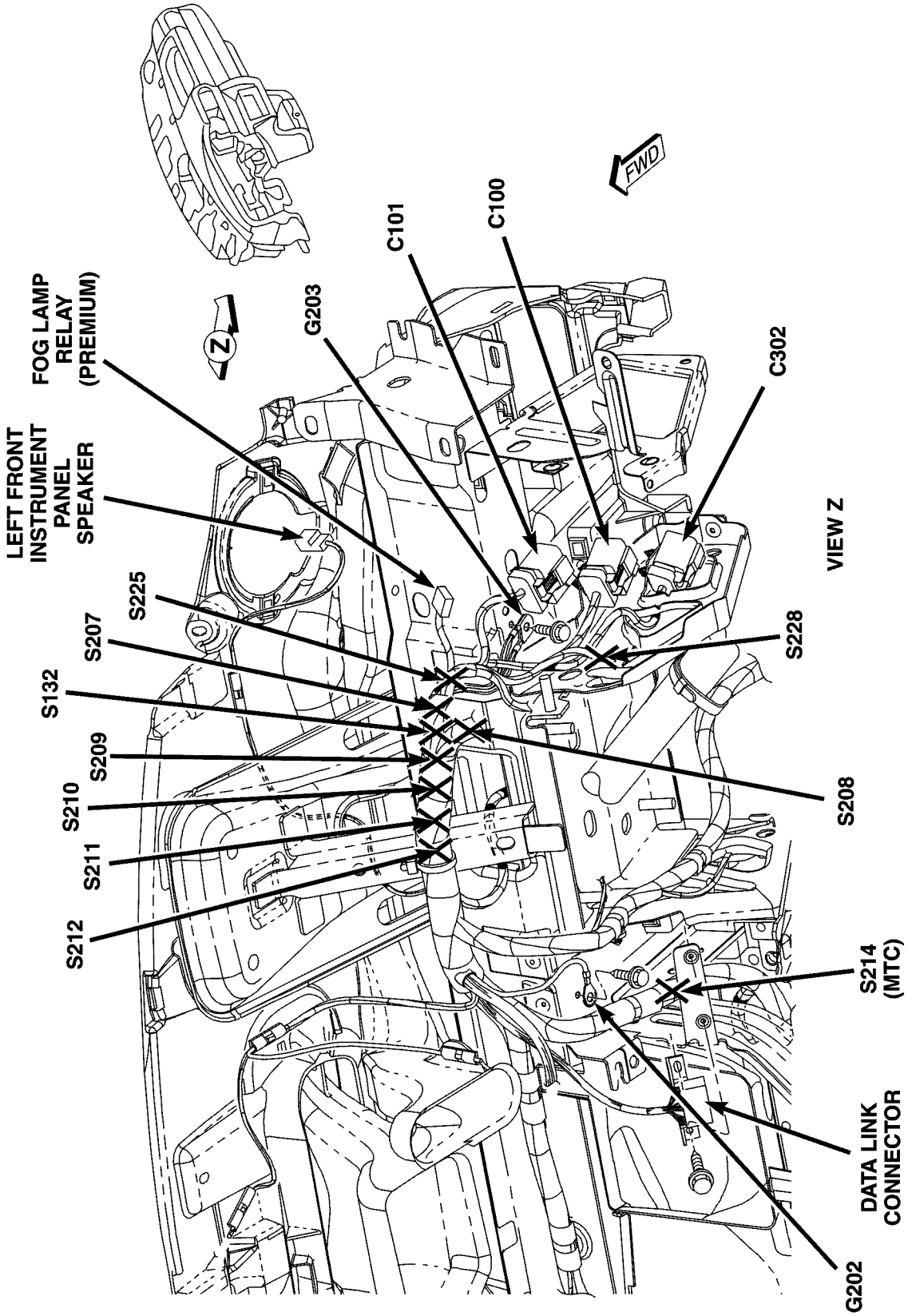

Fig. 22 LEFT SIDE INSTRUMENT PANEL REAR VIEW

CONNECTOR/GROUND/SPLICE LOCATION (Continued)

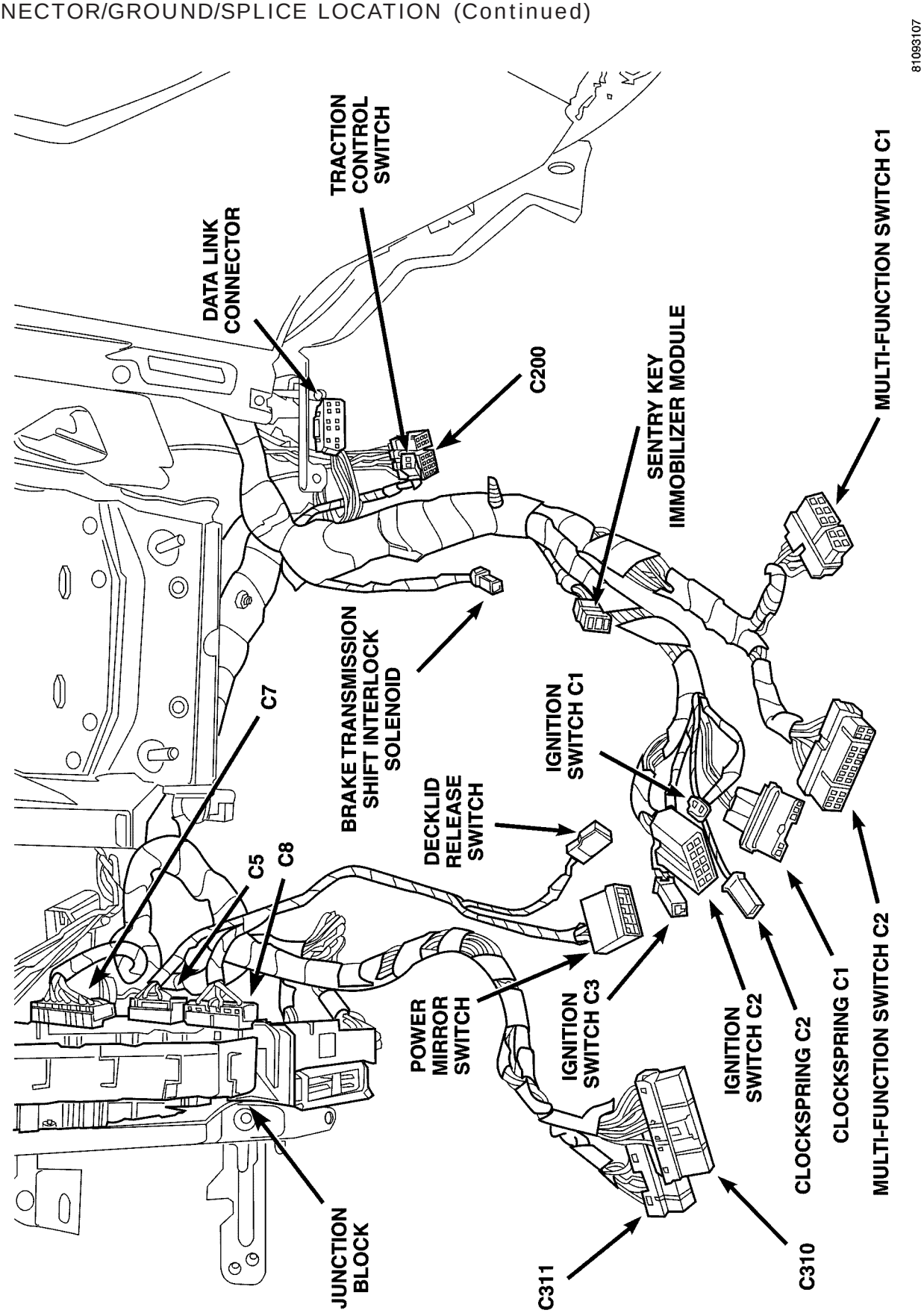

Fig. 23 LEFT SIDE INSTRUMENT PANEL FRONT VIEW

CONNECTOR/GROUND/SPLICE LOCATION (Continued)

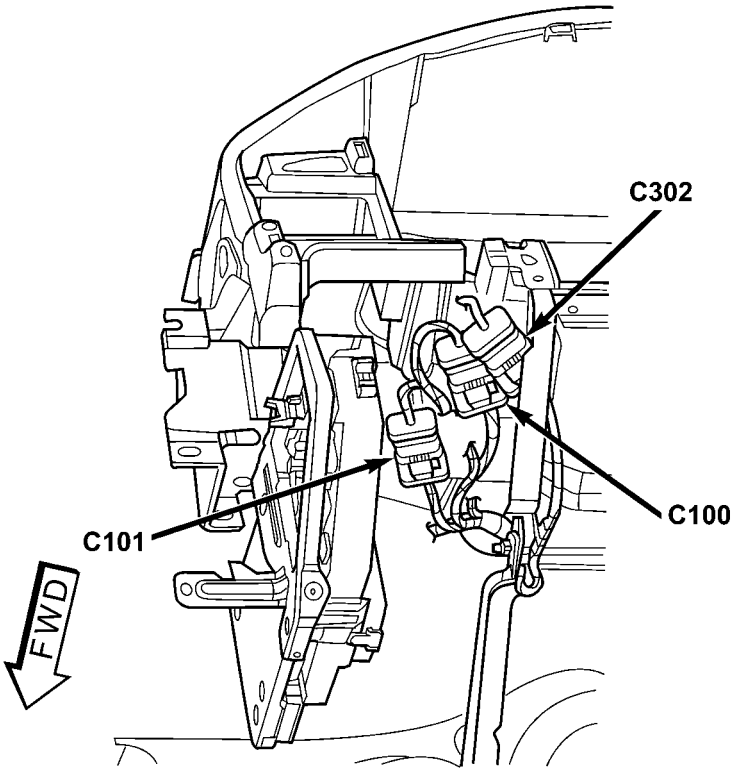

80aa53ed

Fig. 24 LEFT INSTRUMENT PANEL INLINES

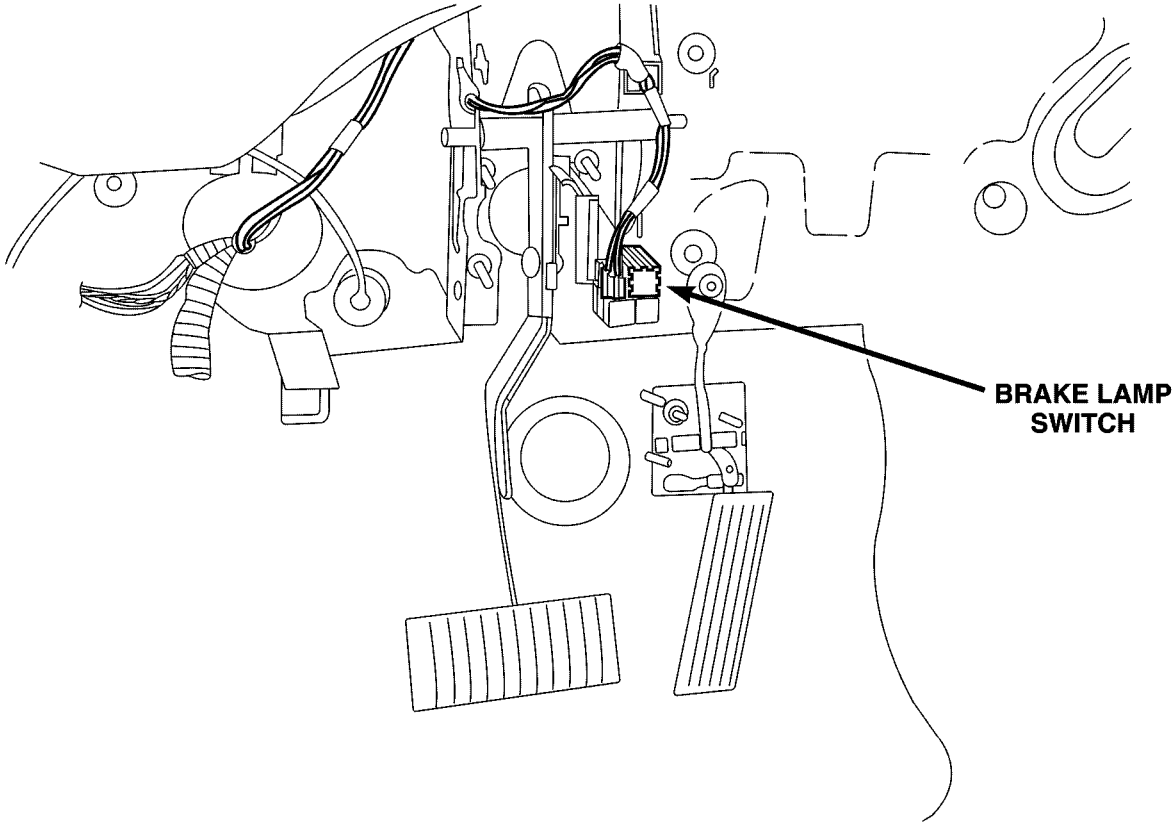

810931d2

Fig. 25 BRAKE LAMP SWITCH

CONNECTOR/GROUND/SPLICE LOCATION (Continued)

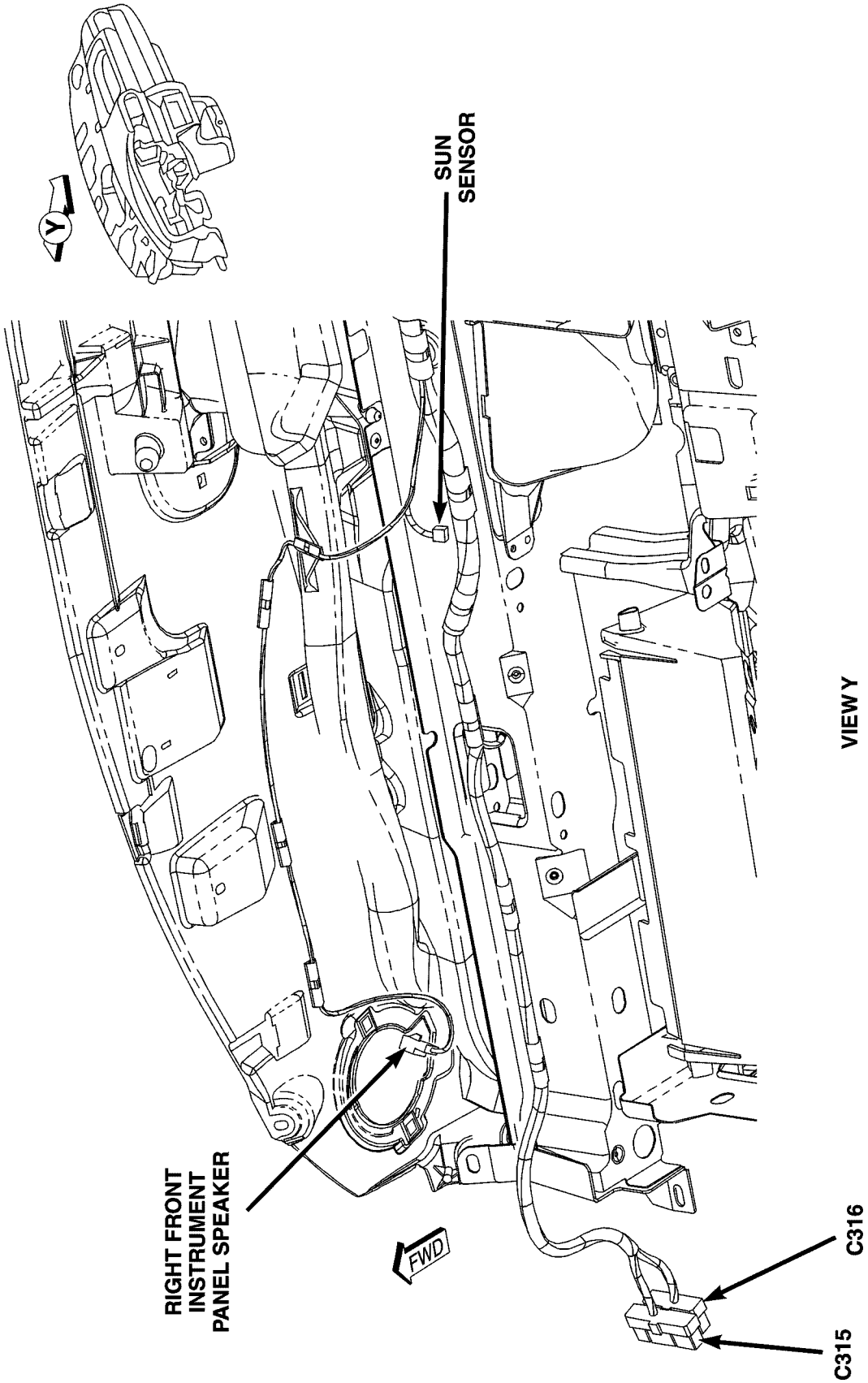

Fig. 26 RIGHT SIDE INSTRUMENT PANEL

CONNECTOR/GROUND/SPLICE LOCATION (Continued)

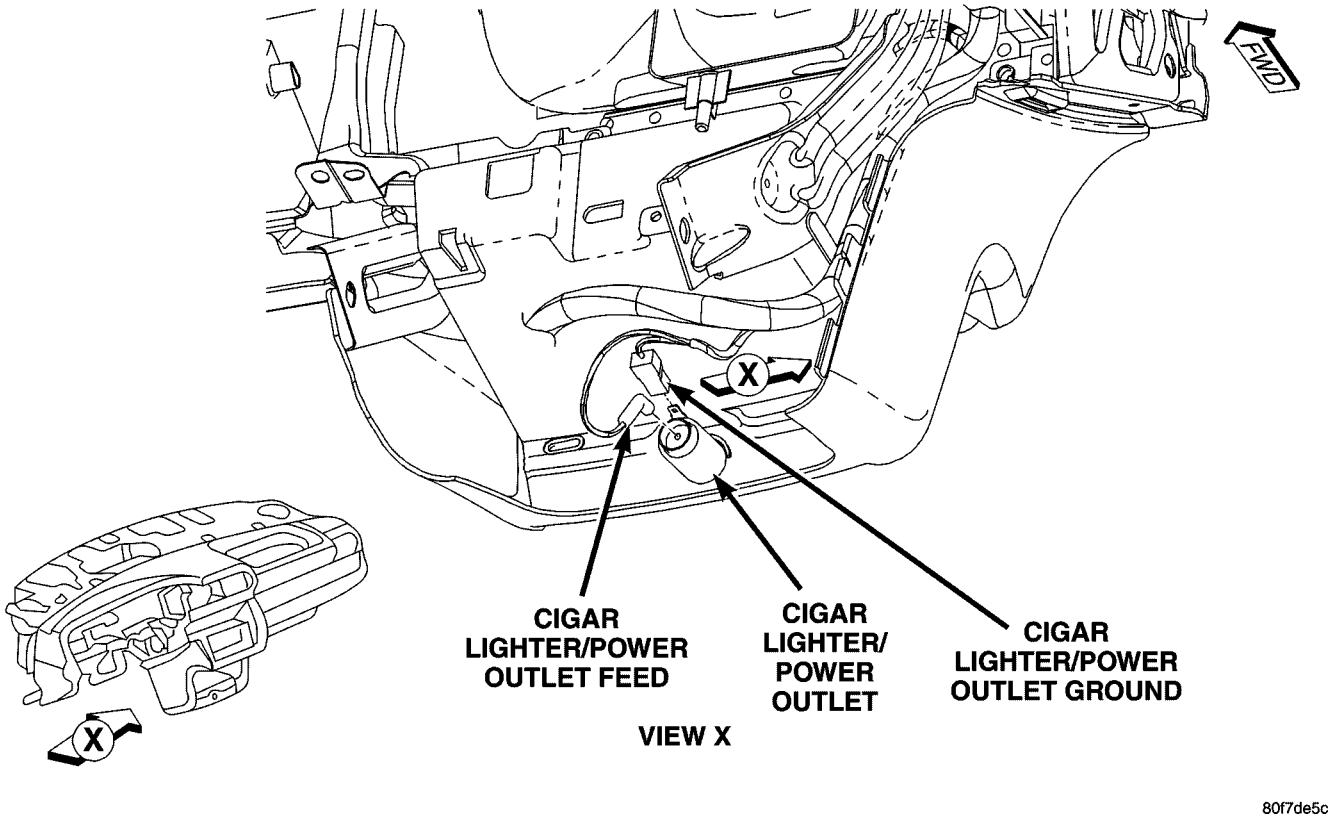

Fig. 27 CENTER INSTRUMENT PANEL REAR

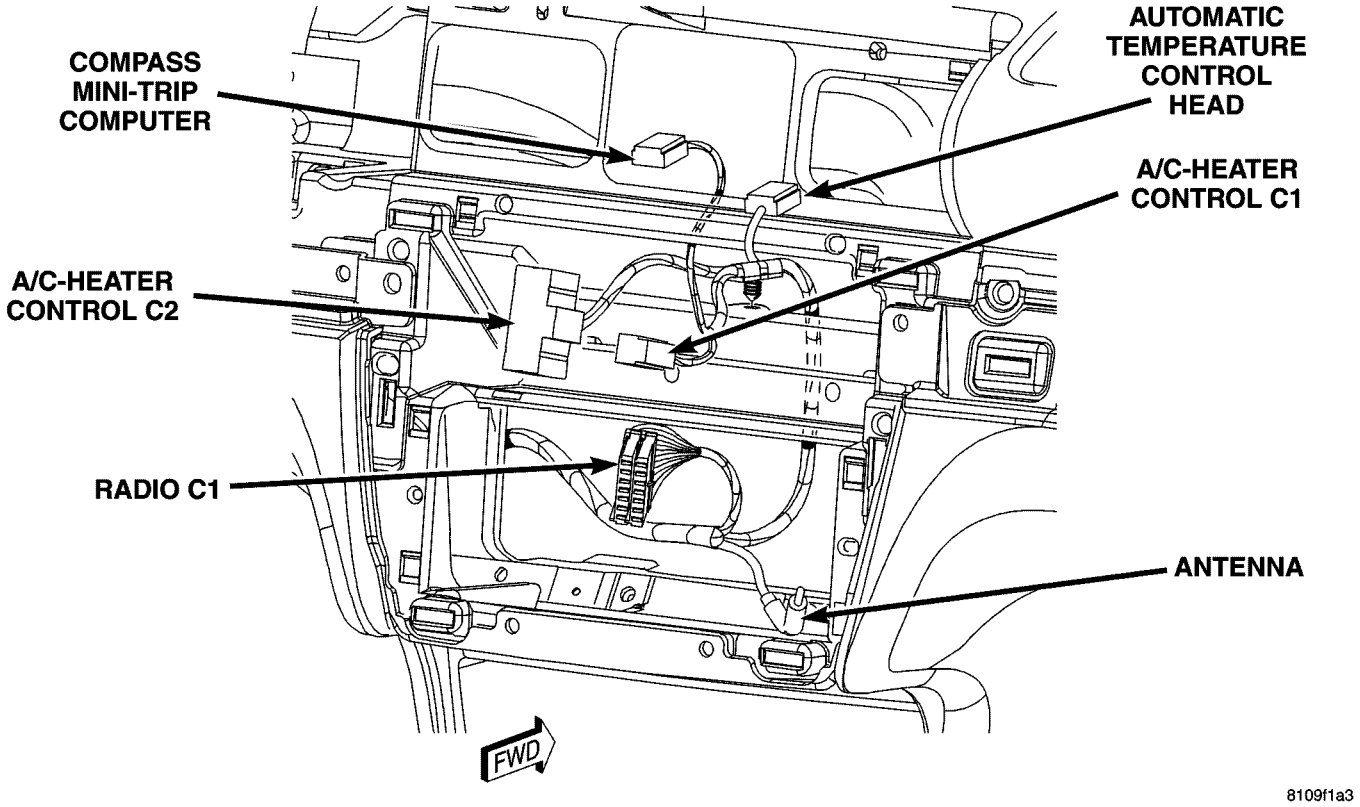

Fig. 28 CENTER INSTRUMENT PANEL CONNECTORS

CONNECTOR/GROUND/SPLICE LOCATION (Continued)

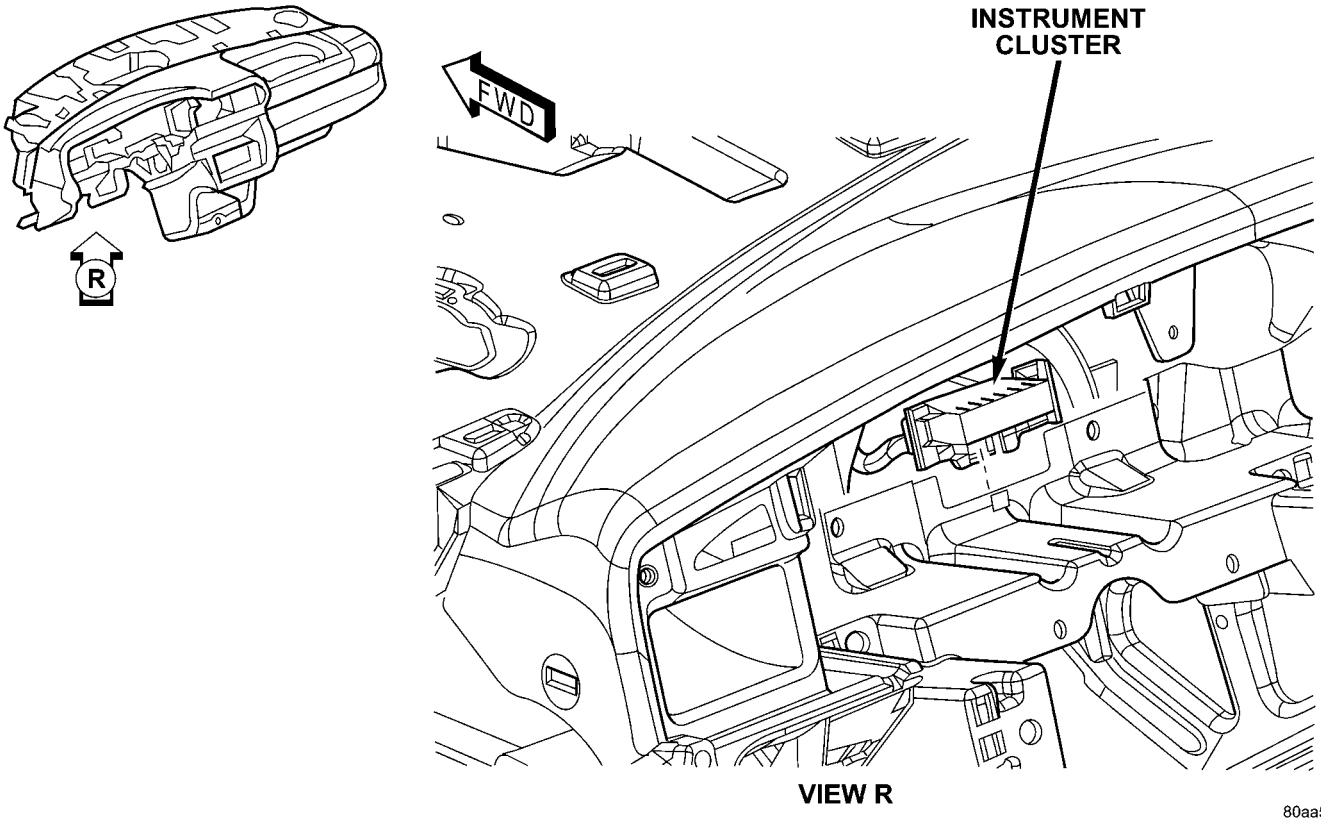

Fig. 29 INSTRUMENT CLUSTER

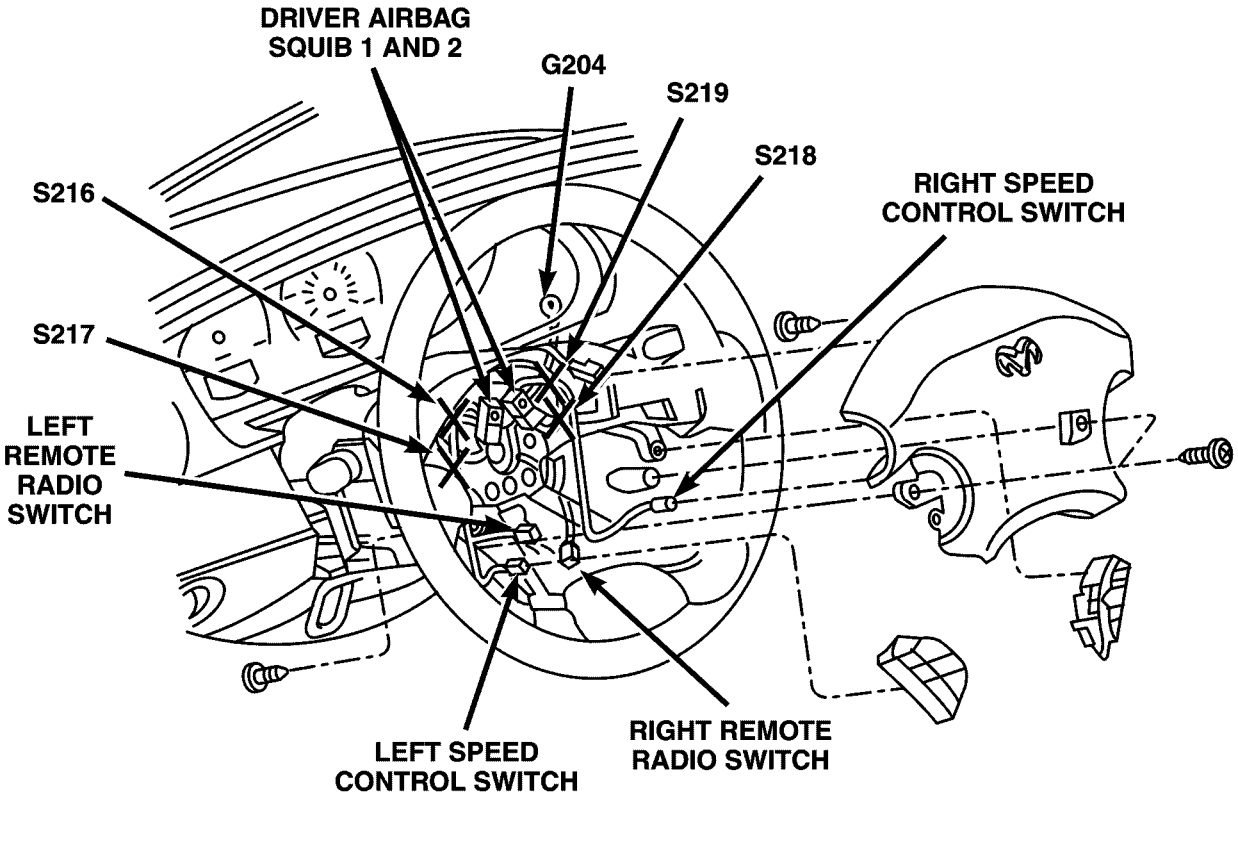

Fig. 30 STEERING COLUMN

CONNECTOR/GROUND/SPLICE LOCATION (Continued)

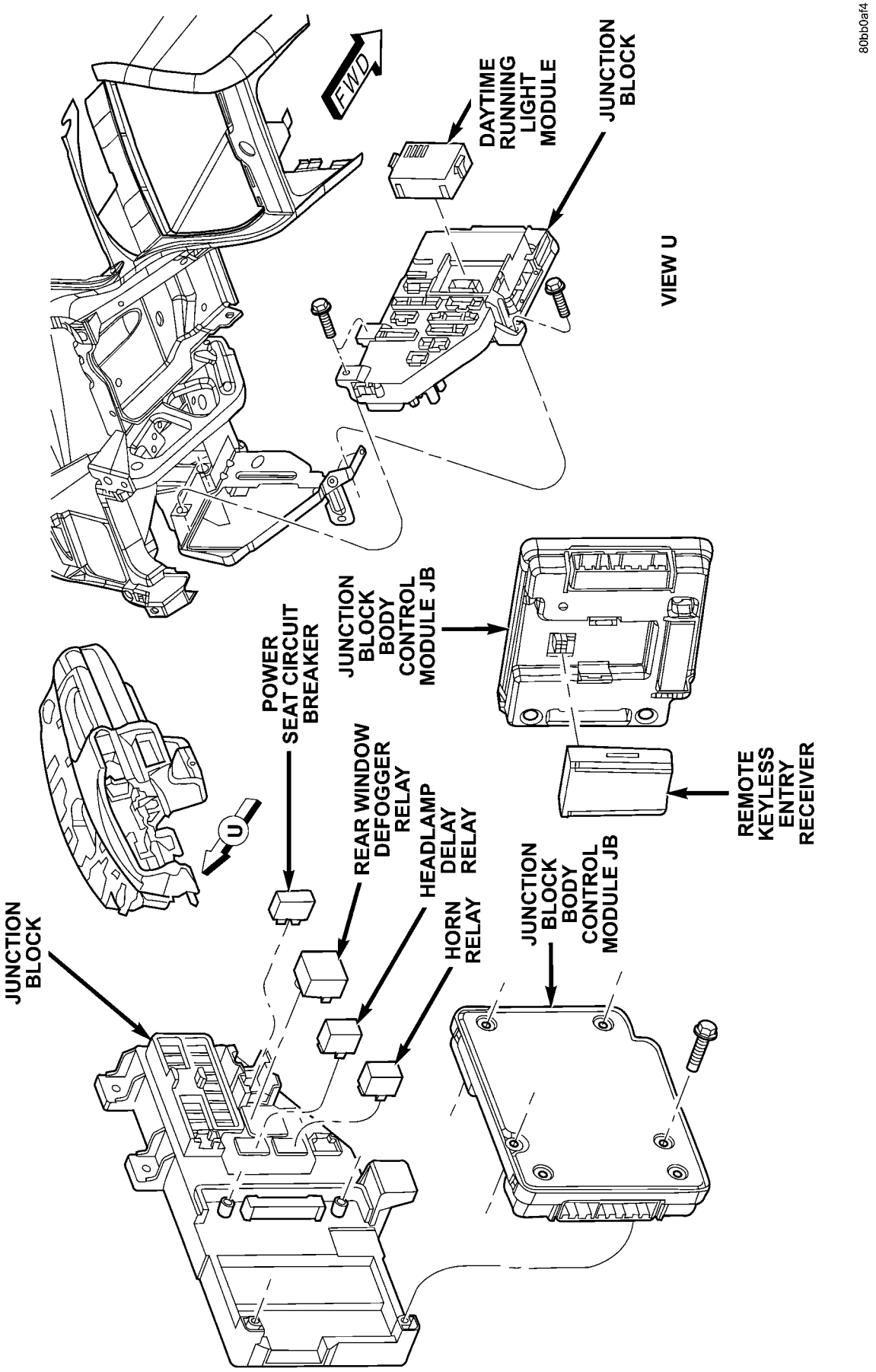

Fig. 31 JUNCTION BLOCK

CONNECTOR/GROUND/SPLICE LOCATION (Continued)

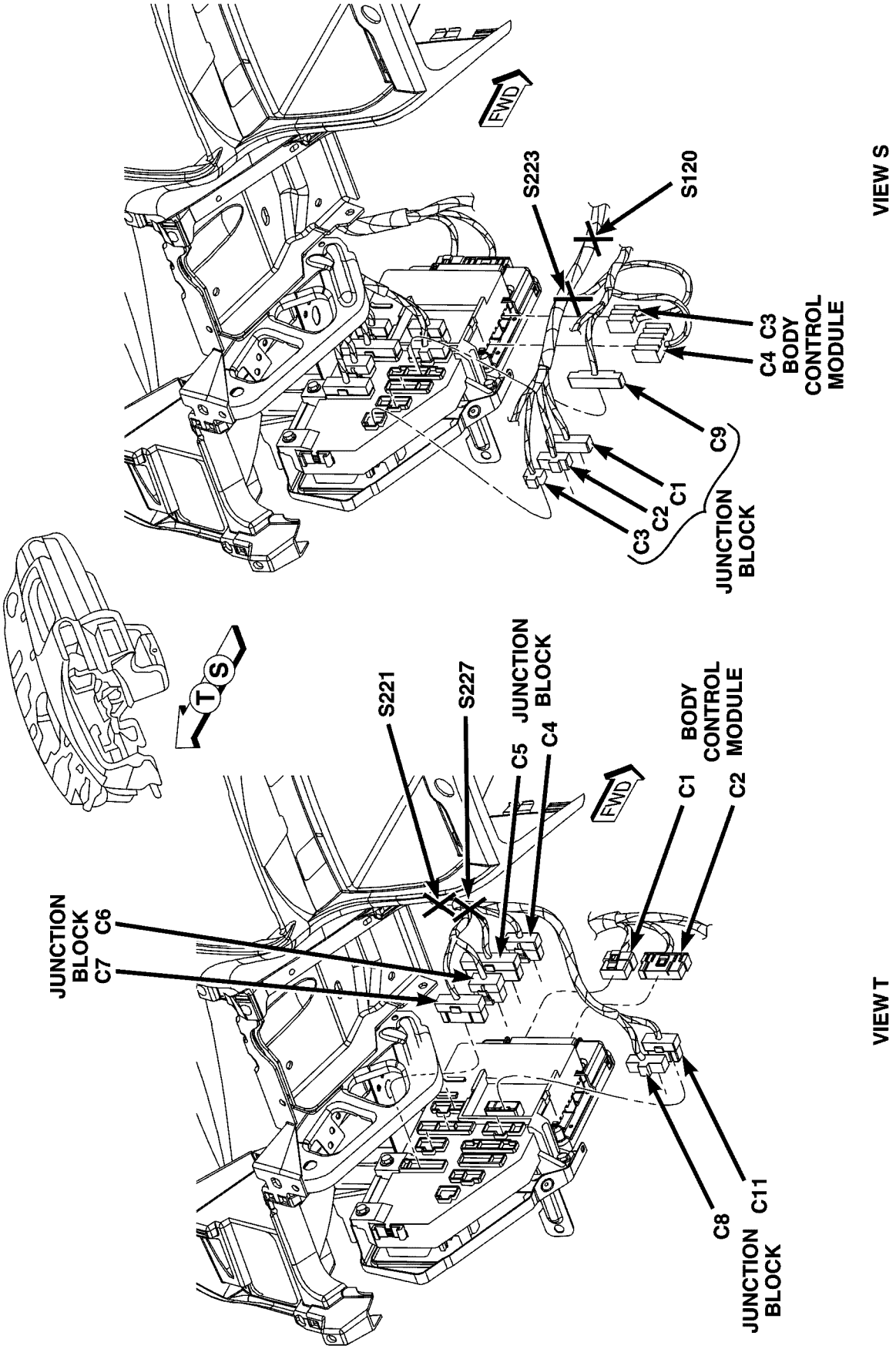

Fig. 32 LEFT FRONT KICK PANEL

CONNECTOR/GROUND/SPLICE LOCATION (Continued)

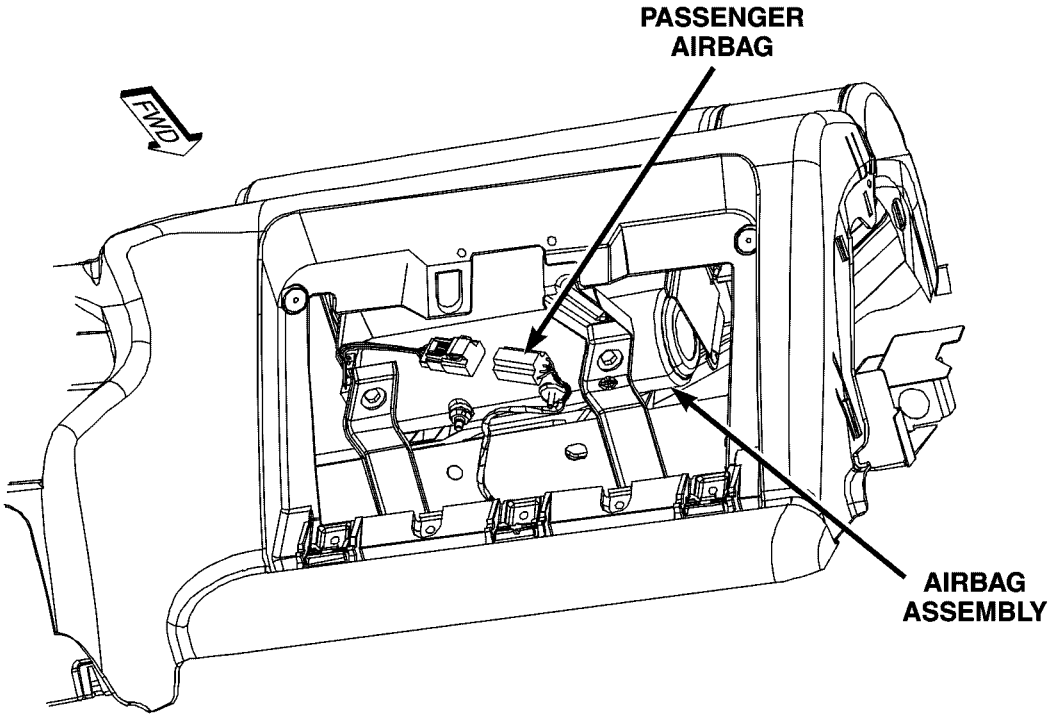

80f7dea5

Fig. 33 GLOVE BOX CONNECTORS

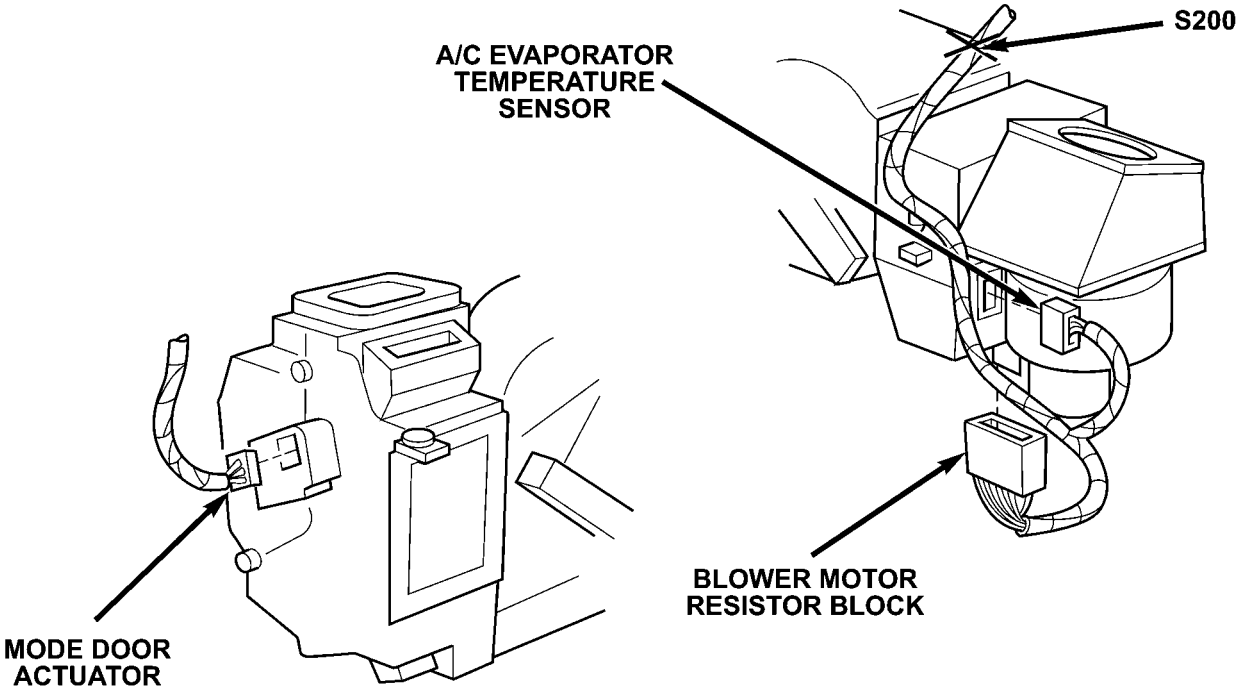

80cfd858

Fig. 34 HVAC CONNECTORS (MTC)

CONNECTOR/GROUND/SPLICE LOCATION (Continued)

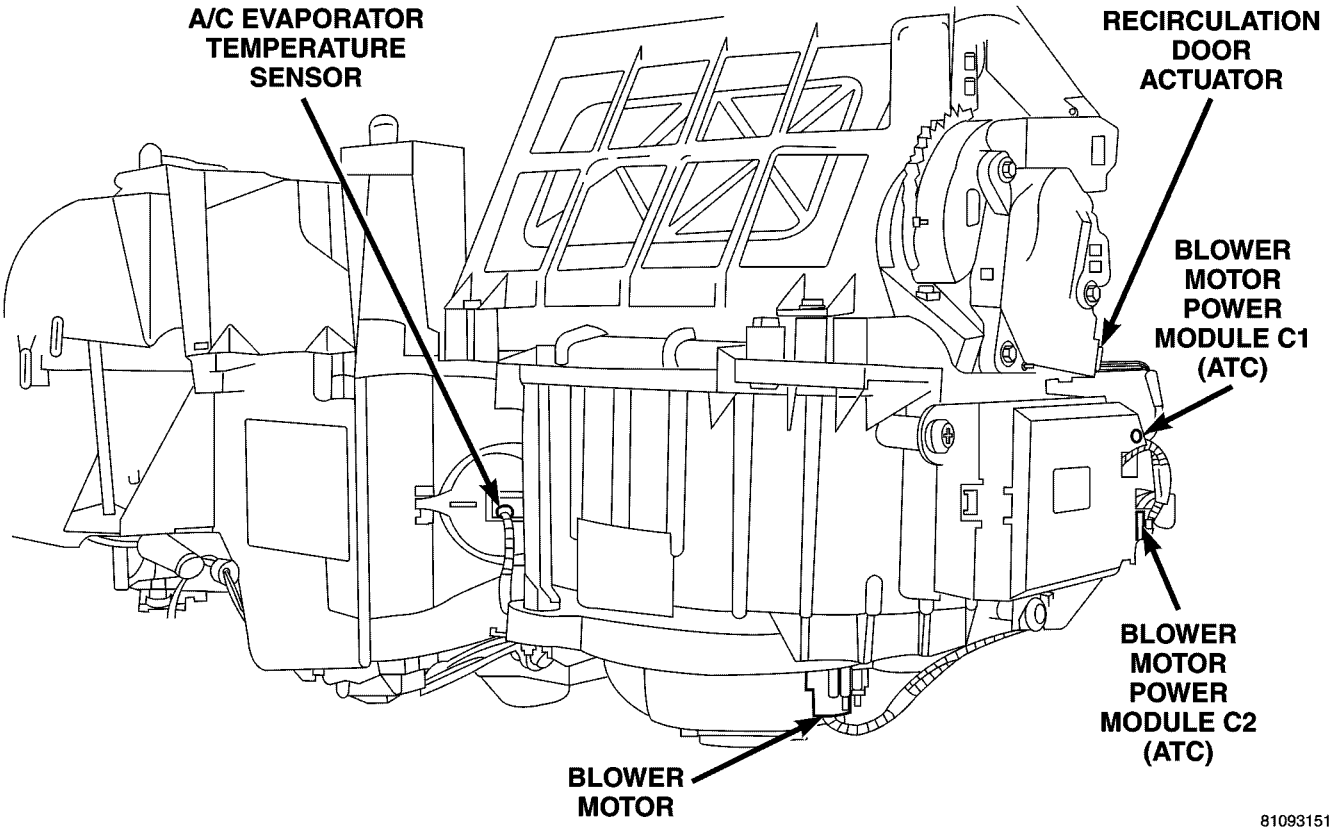

Fig. 35 HVAC RIGHT (ATC)

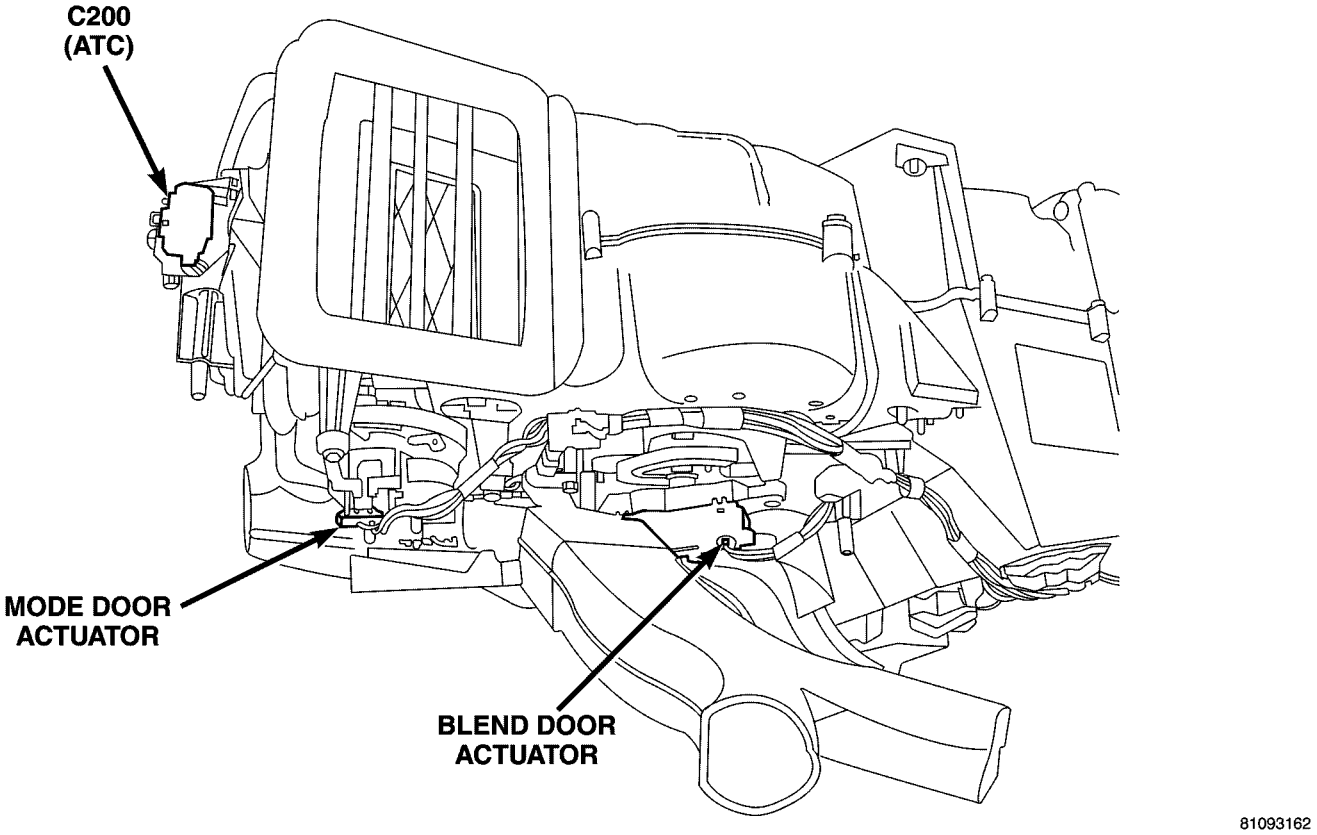

Fig. 36 HVAC LEFT (ATC)

CONNECTOR/GROUND/SPLICE LOCATION (Continued)

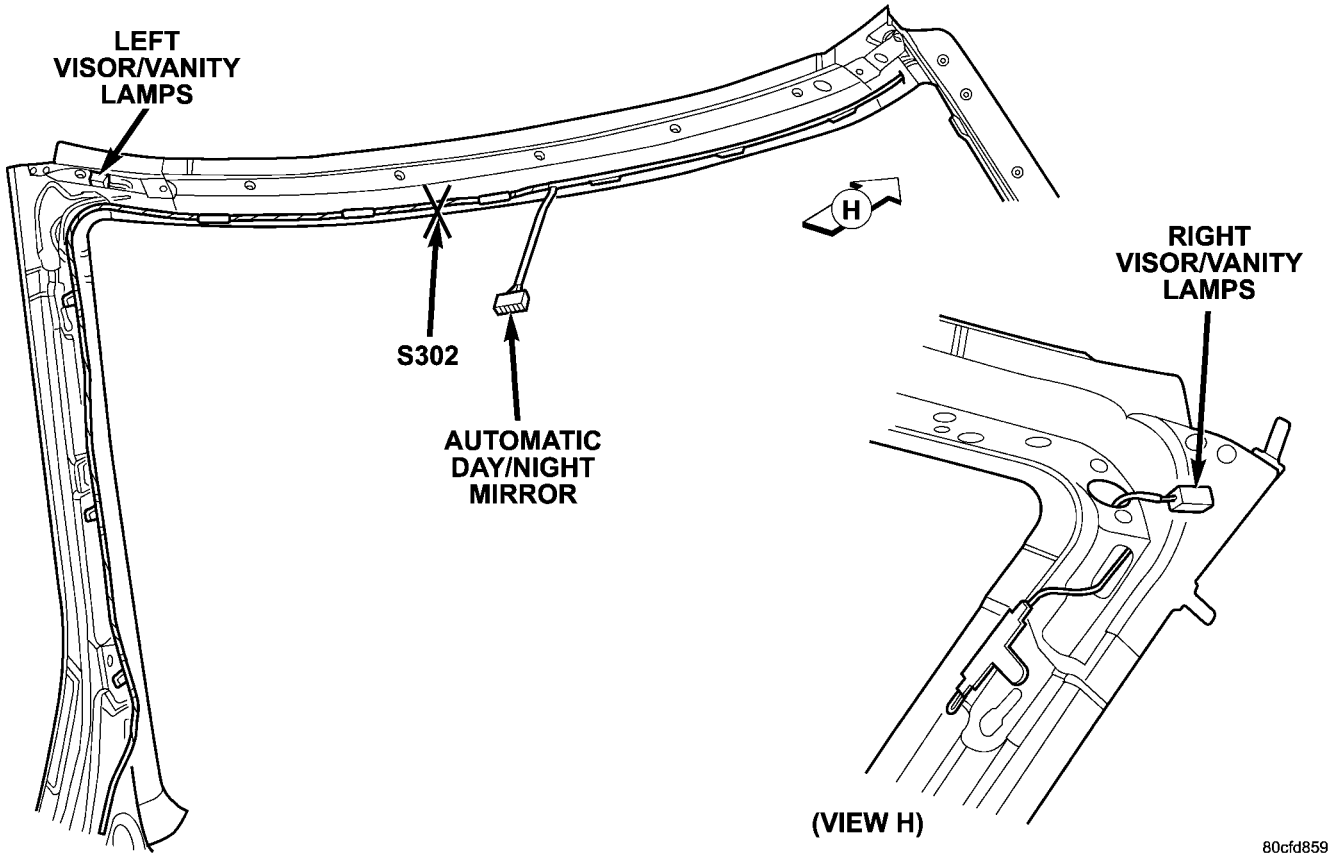

Fig. 37 HEADER CONNECTORS

CONNECTOR/GROUND/SPLICE LOCATION (Continued)

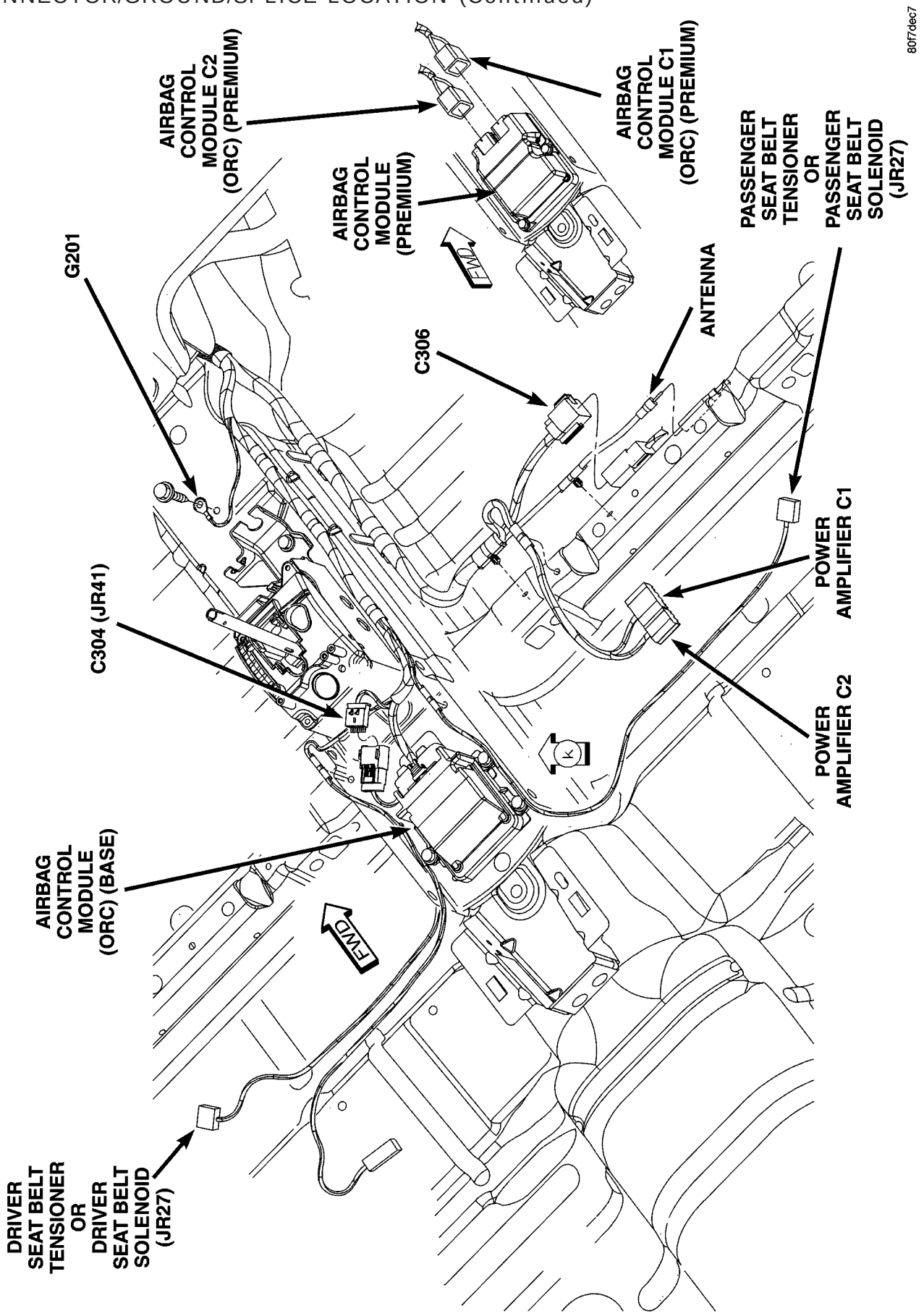

Fig. 38 FRONT CENTER BODY CONNECTORS

CONNECTOR/GROUND/SPLICE LOCATION (Continued)

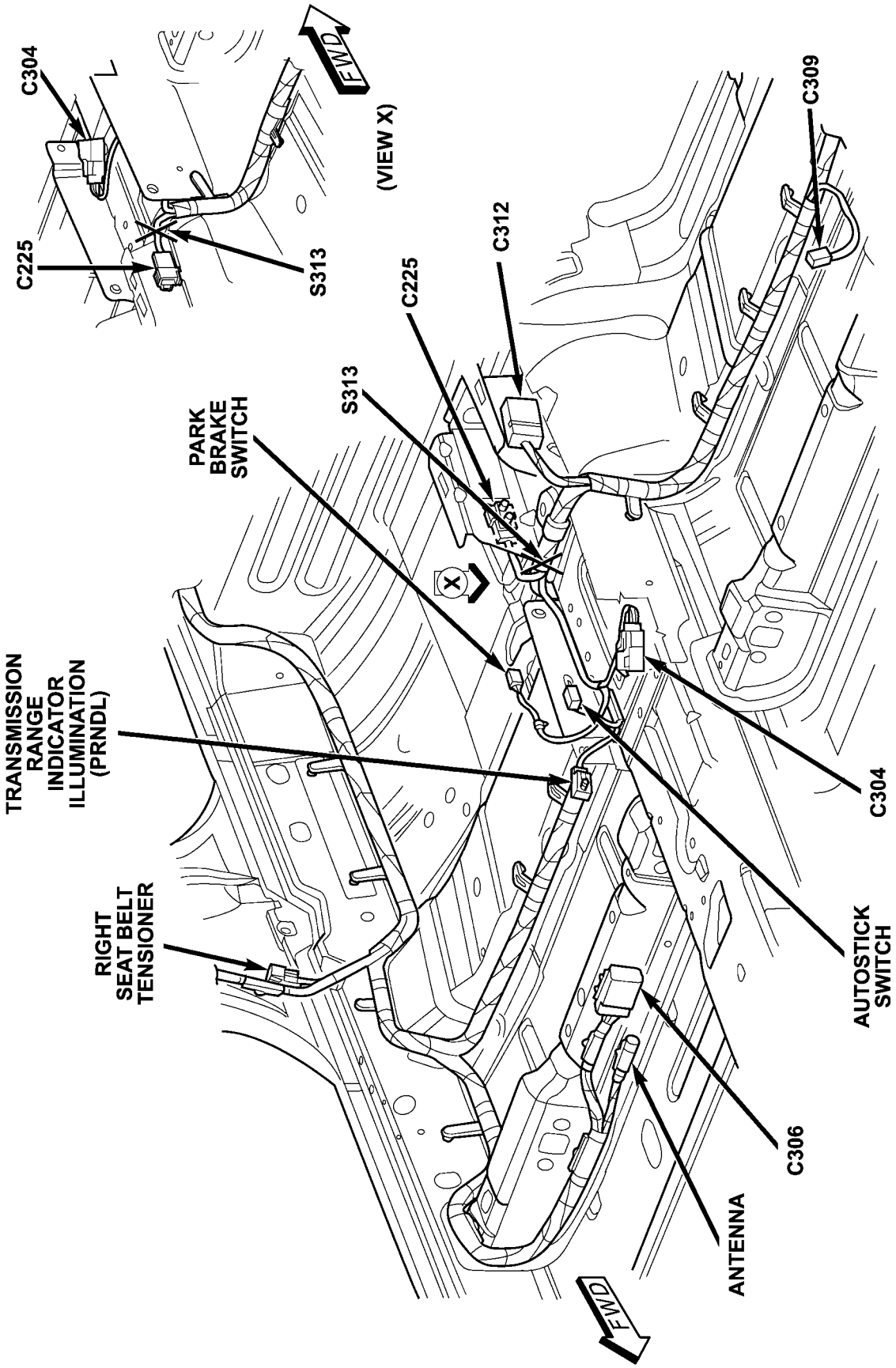

Fig. 39 CENTER BODY CONNECTORS

CONNECTOR/GROUND/SPLICE LOCATION (Continued)

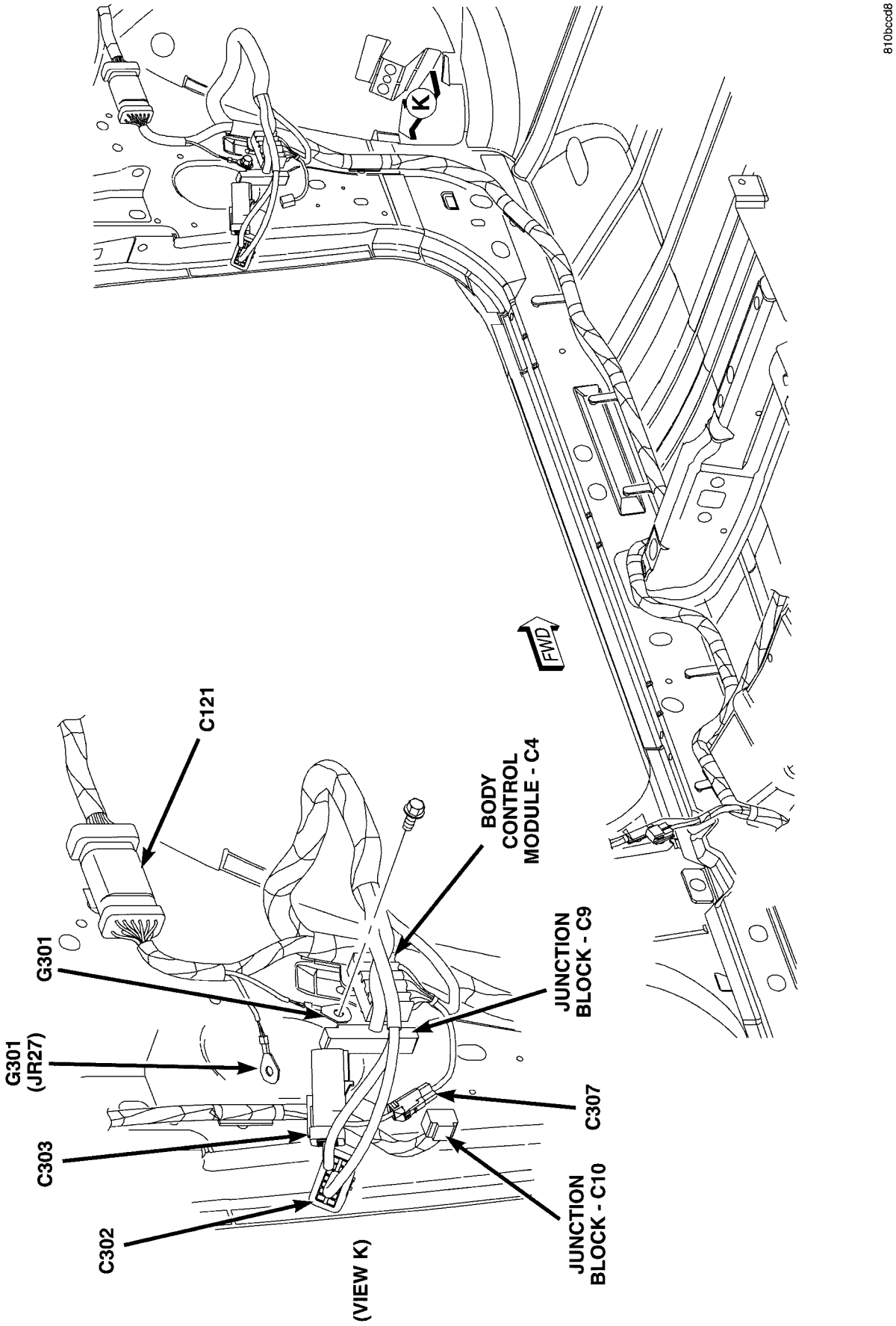

Fig. 40 LEFT FRONT BODY CONNECTORS

CONNECTOR/GROUND/SPLICE LOCATION (Continued)

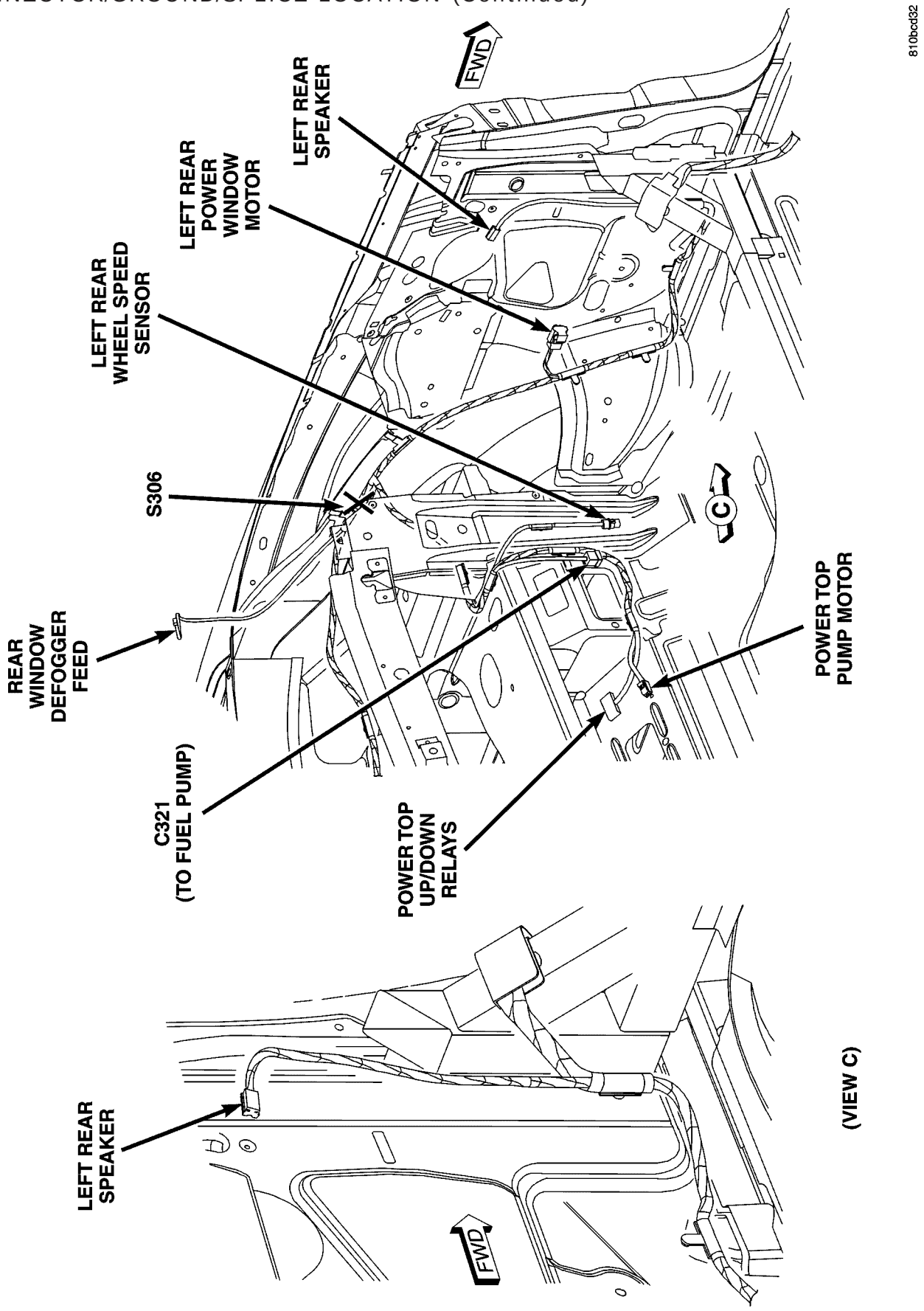

Fig. 41 LEFT SIDE BODY CONNECTORS (JR-27)

CONNECTOR/GROUND/SPLICE LOCATION (Continued)

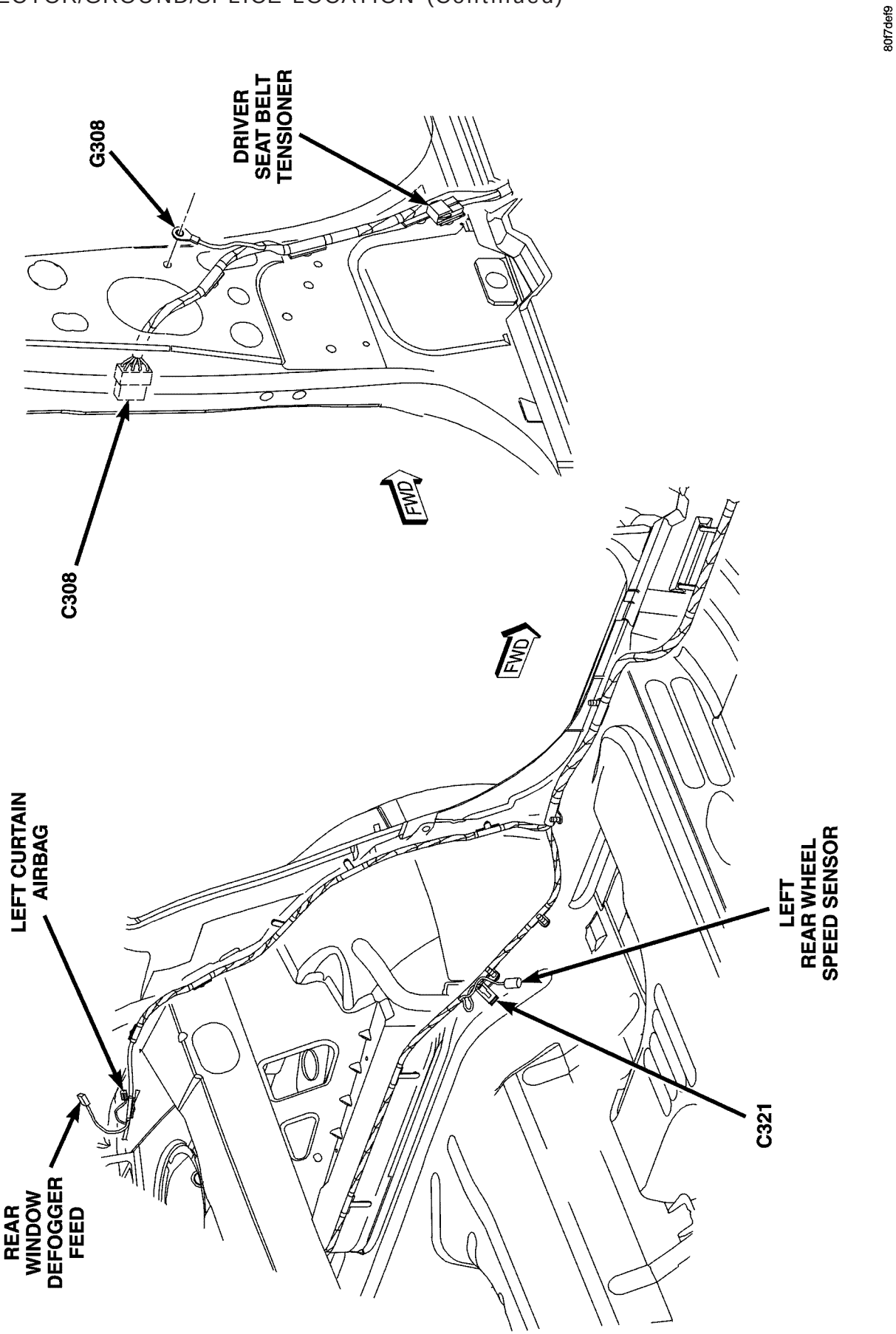

Fig. 42 LEFT SIDE BODY CONNECTORS (JR-41)

CONNECTOR/GROUND/SPLICE LOCATION (Continued)

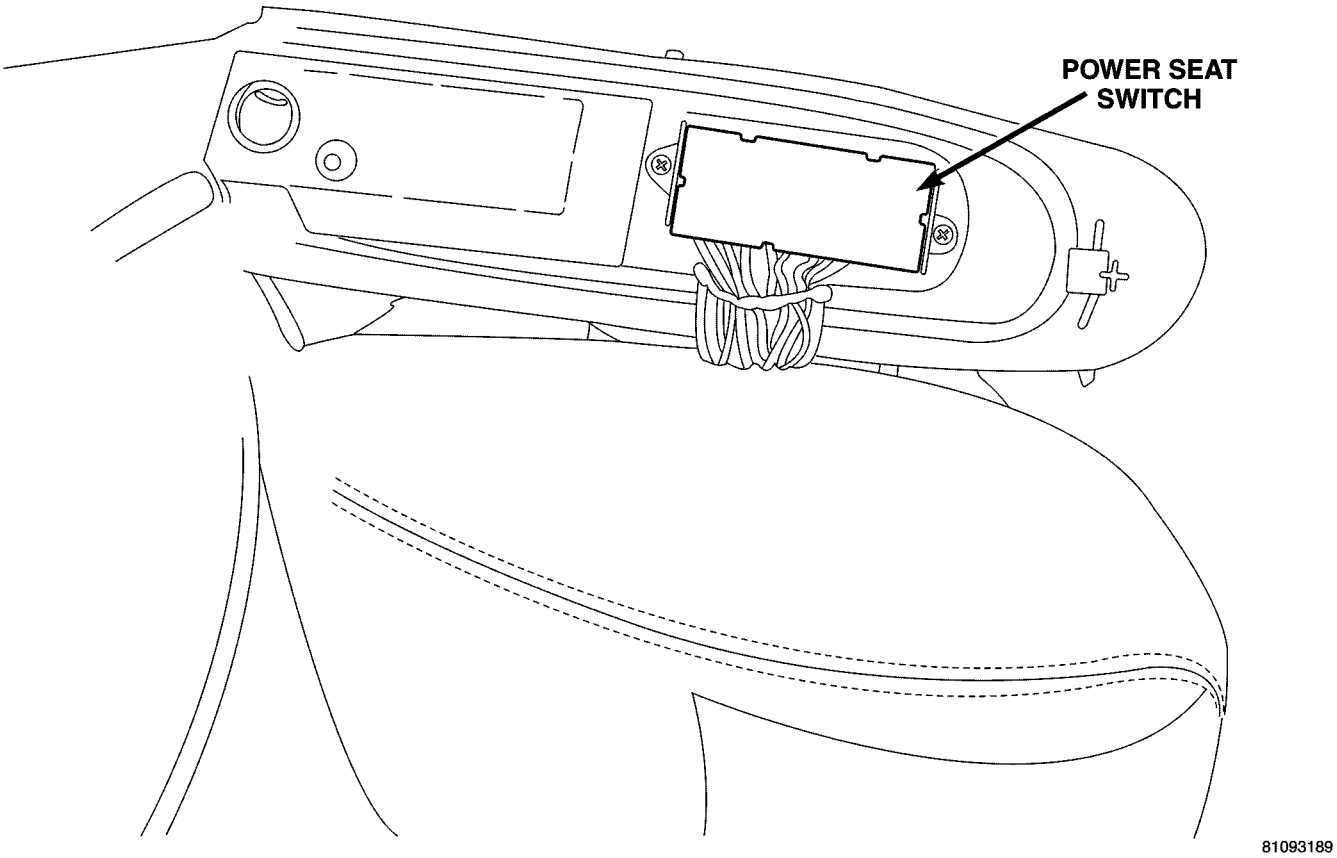

Fig. 43 DRIVER POWER SEAT SWITCH

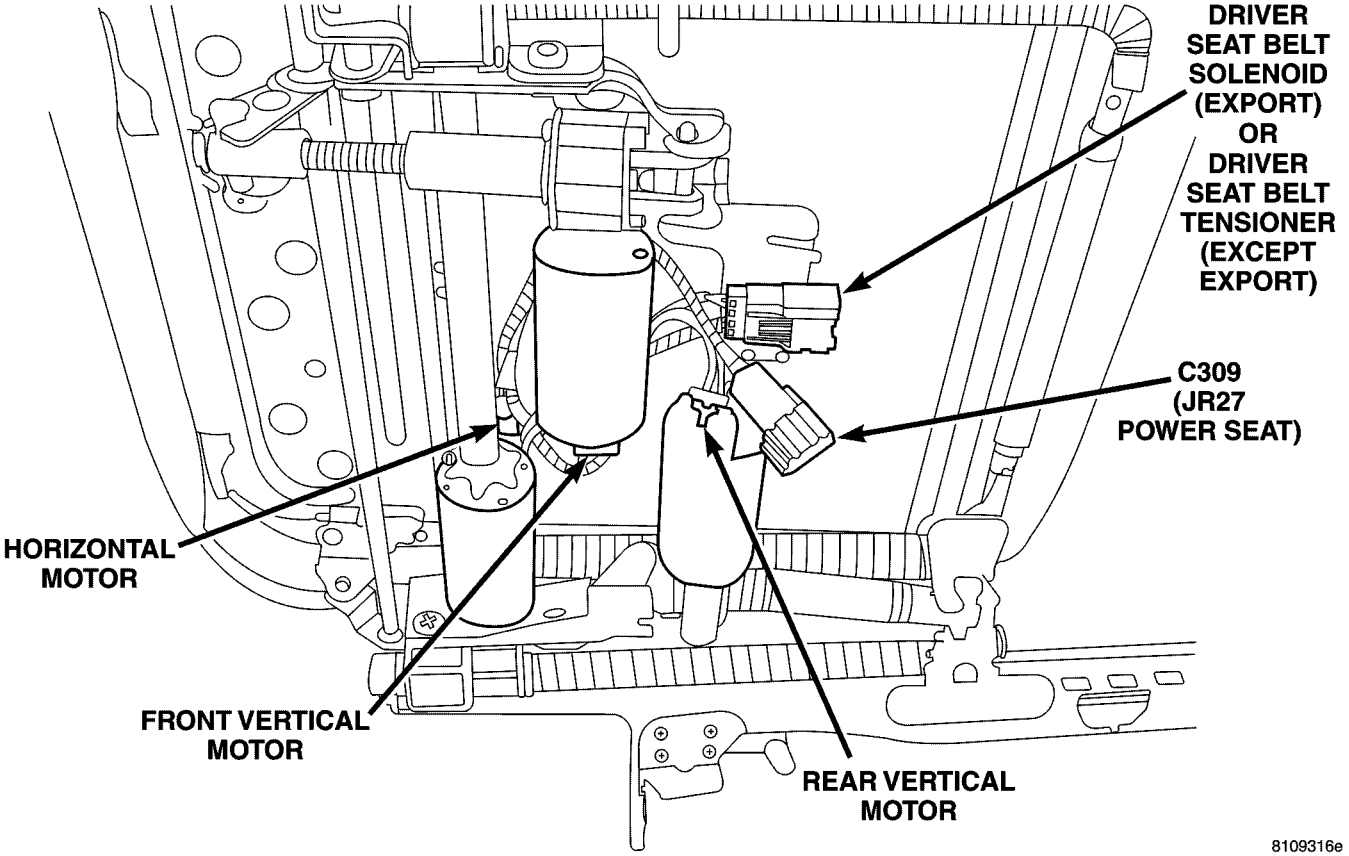

Fig. 44 DRIVER POWER SEAT MOTORS

CONNECTOR/GROUND/SPLICE LOCATION (Continued)

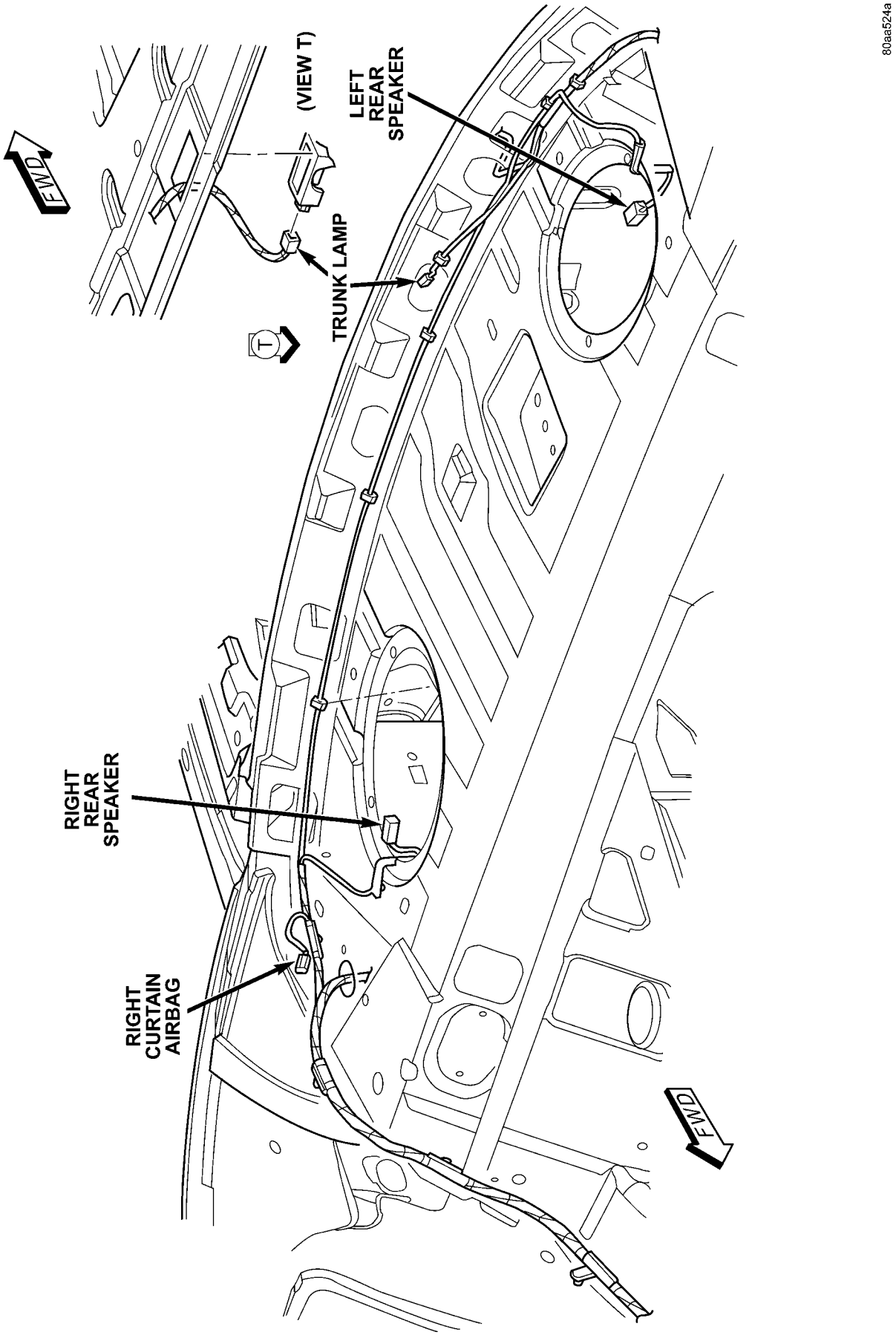

Fig. 45 REAR BODY CONNECTORS

CONNECTOR/GROUND/SPLICE LOCATION (Continued)

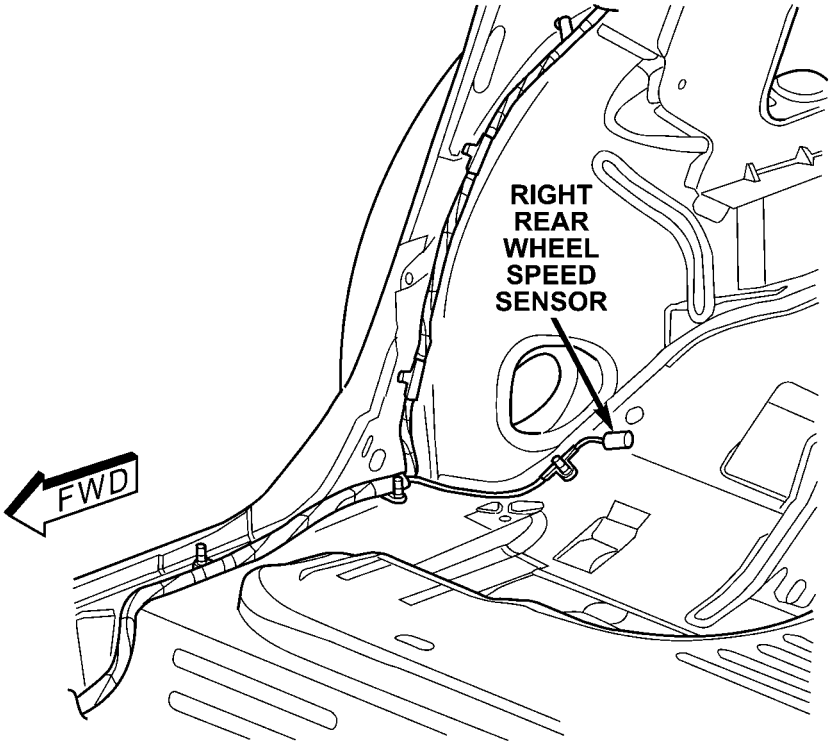

80aa4e66

Fig. 46 RIGHT REAR QUARTER PANEL

CONNECTOR/GROUND/SPLICE LOCATION (Continued)

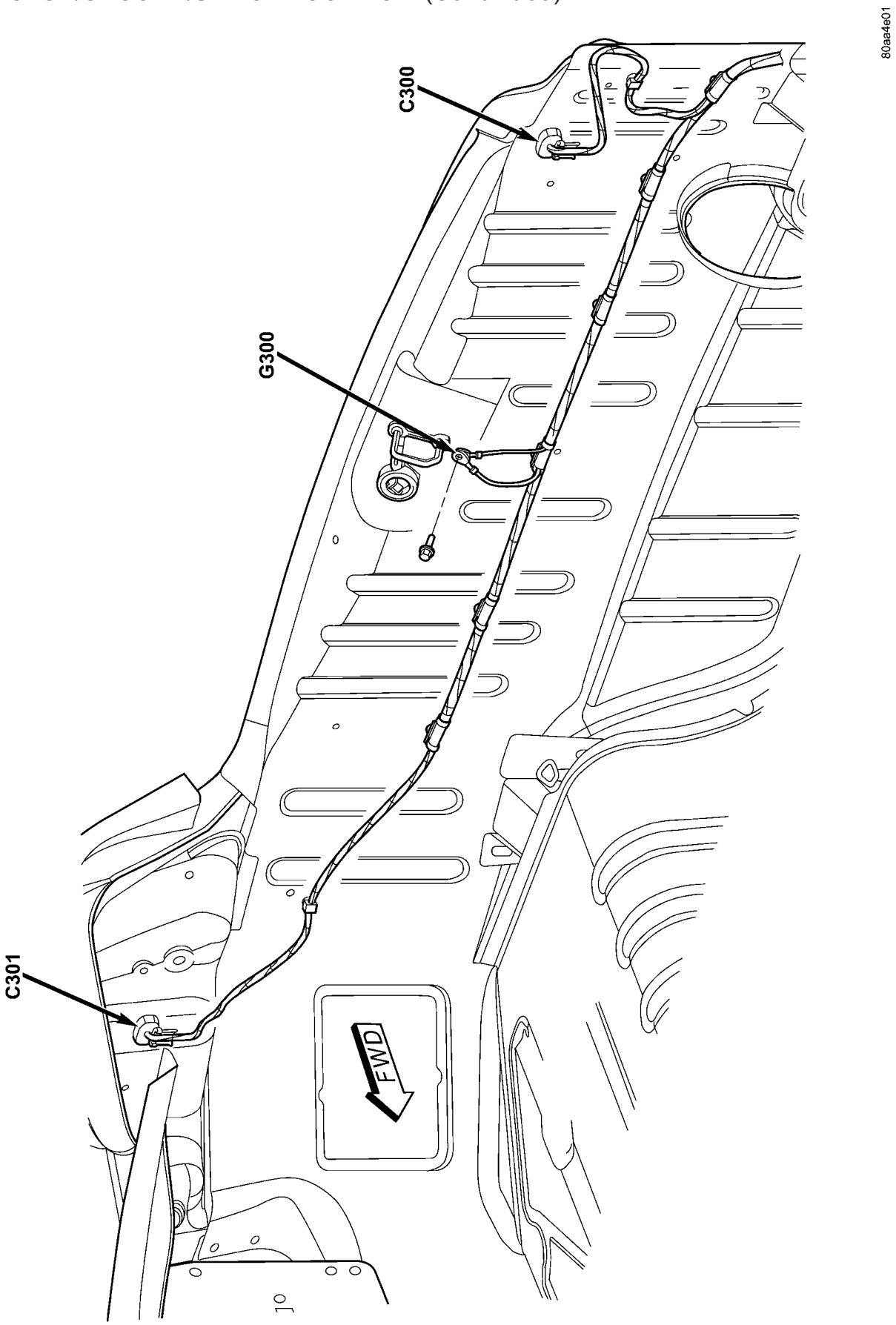

Fig. 47 REAR BODY LIGHTING CONNECTORS

CONNECTOR/GROUND/SPLICE LOCATION (Continued)

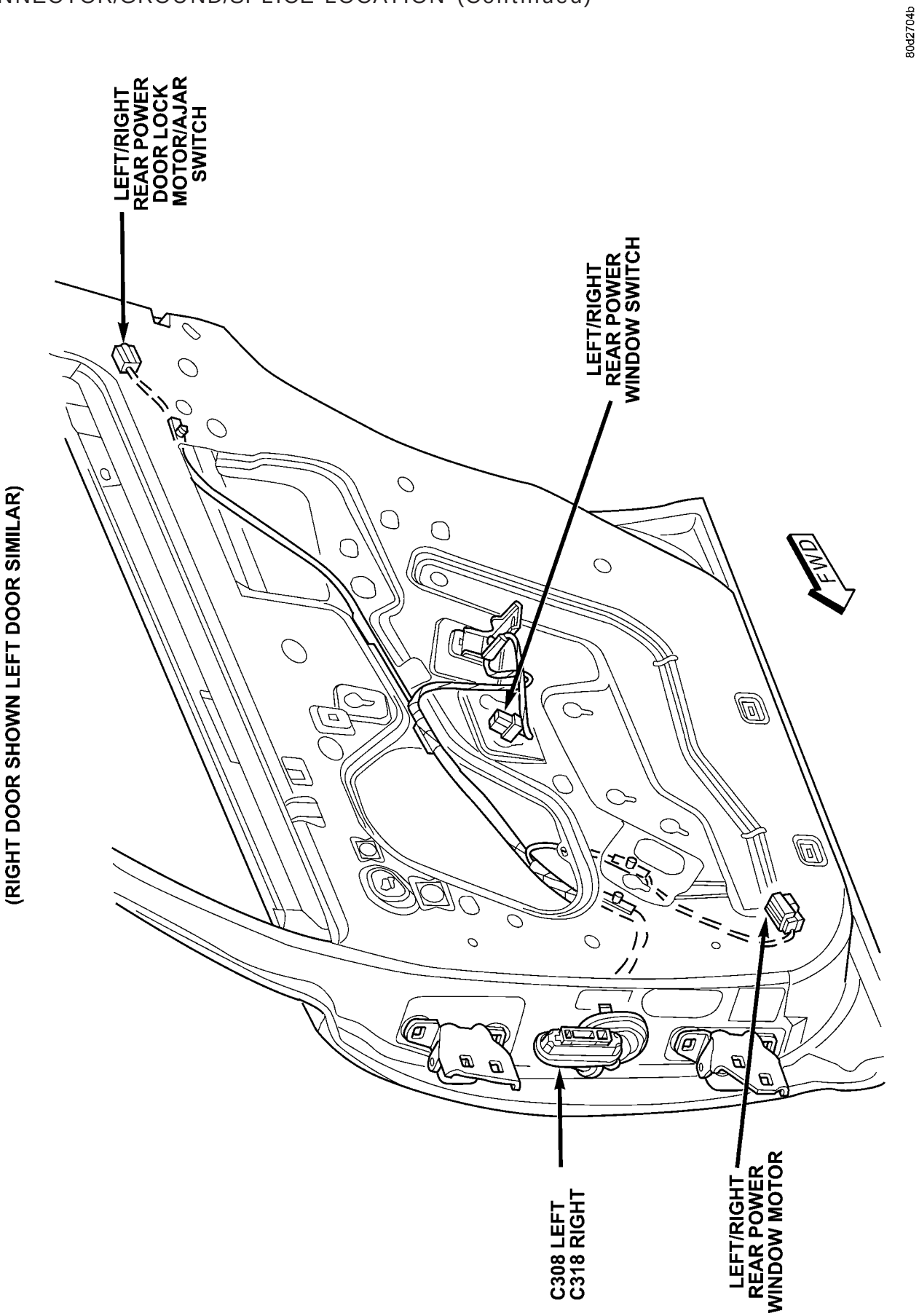

Fig. 48 REAR DOOR CONNECTORS

CONNECTOR/GROUND/SPLICE LOCATION (Continued)

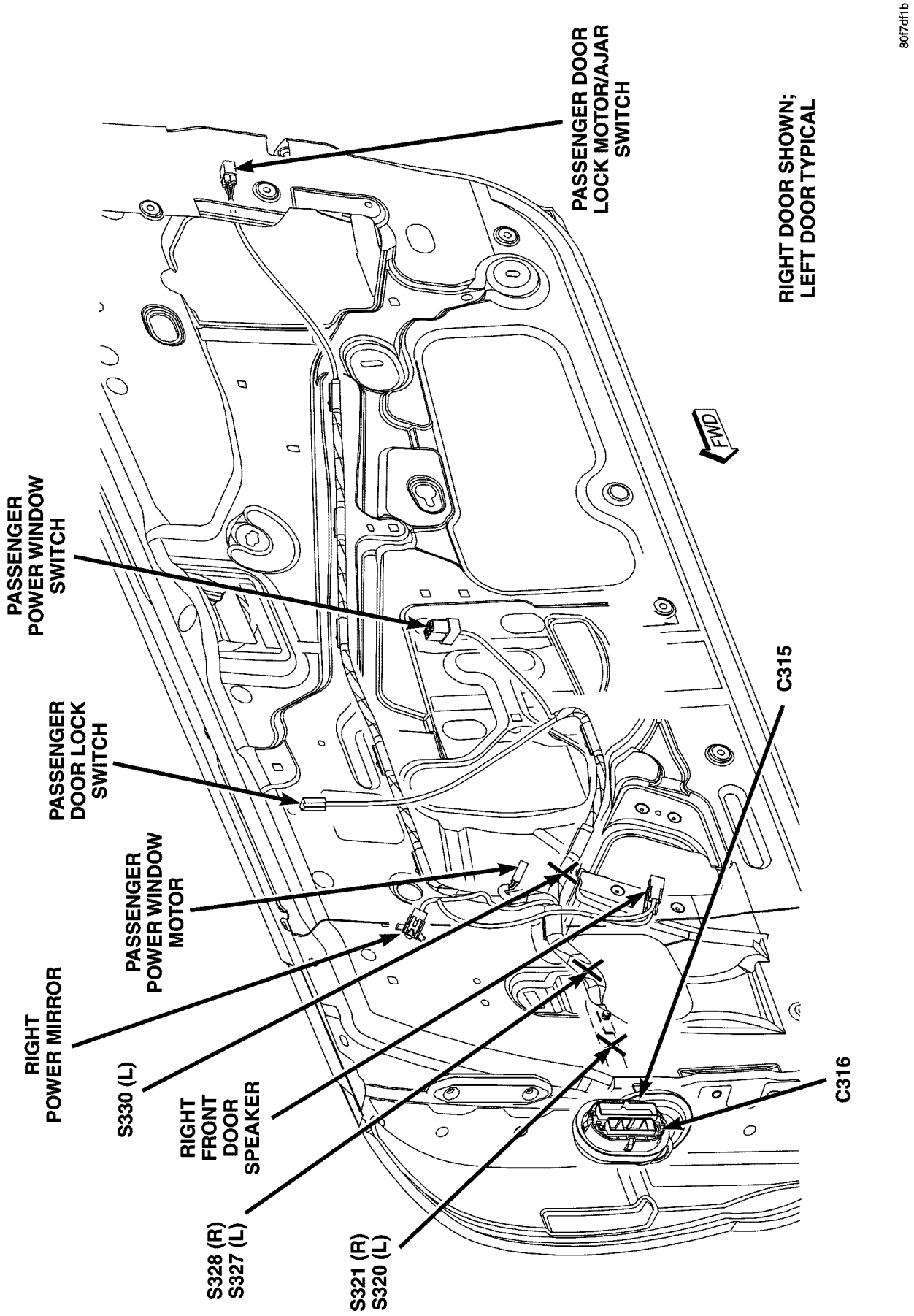

Fig. 49 PASSENGER DOOR CONNECTORS (JR-27)

CONNECTOR/GROUND/SPLICE LOCATION (Continued)

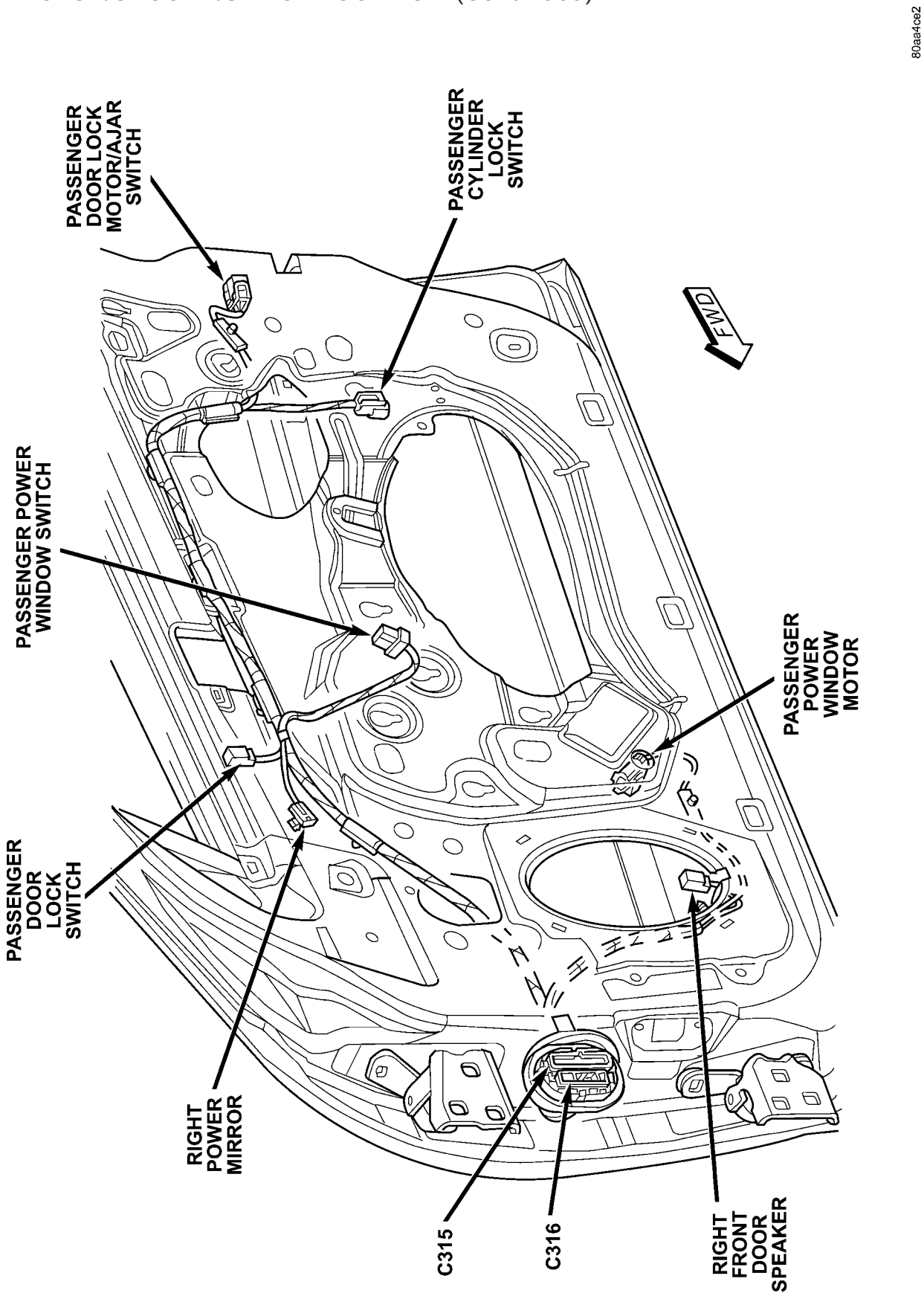

Fig. 50 PASSENGER DOOR CONNECTORS (JR-41)

CONNECTOR/GROUND/SPLICE LOCATION (Continued)

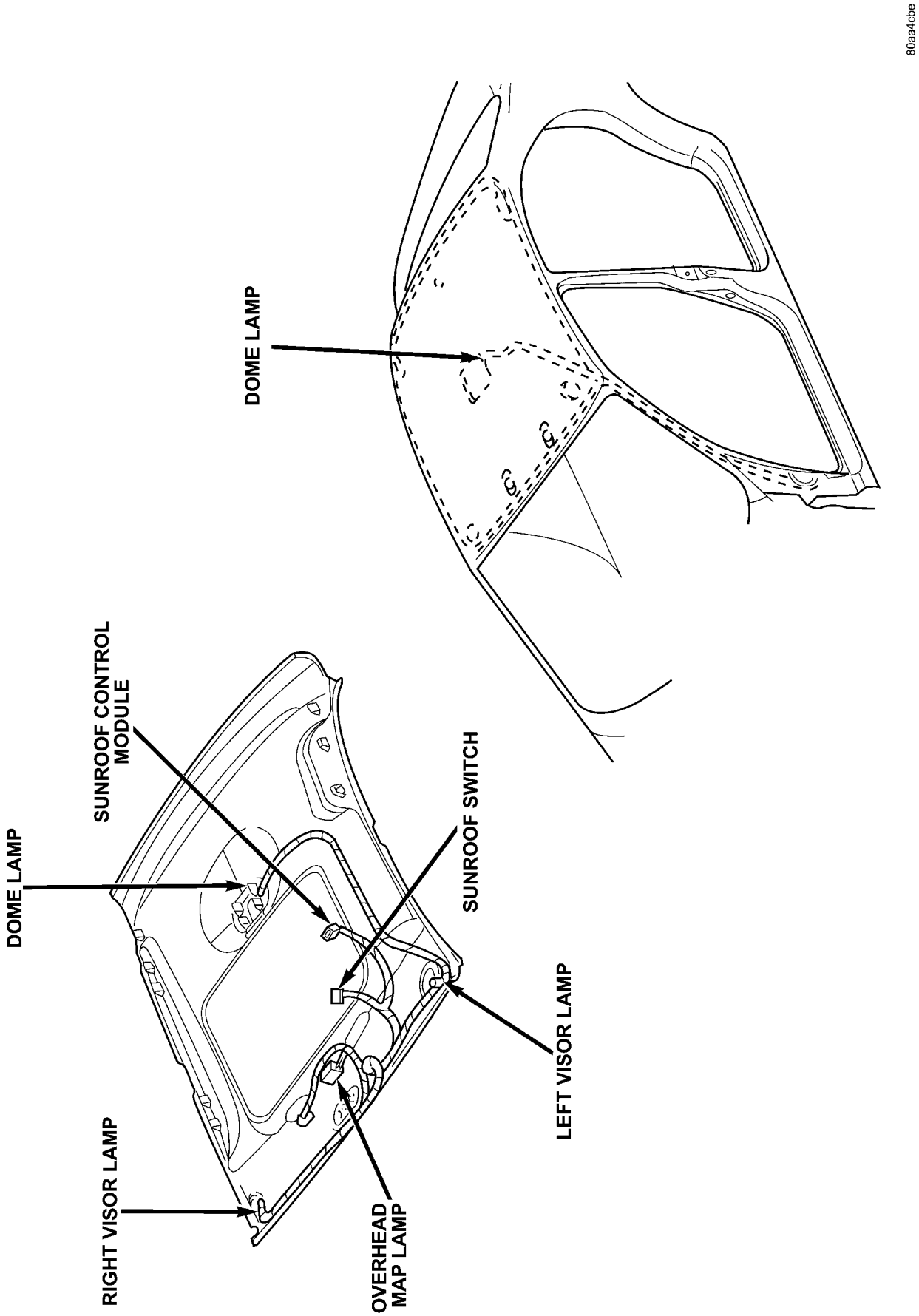

Fig. 51 ROOF CONNECTORS

CONNECTOR/GROUND/SPLICE LOCATION (Continued)

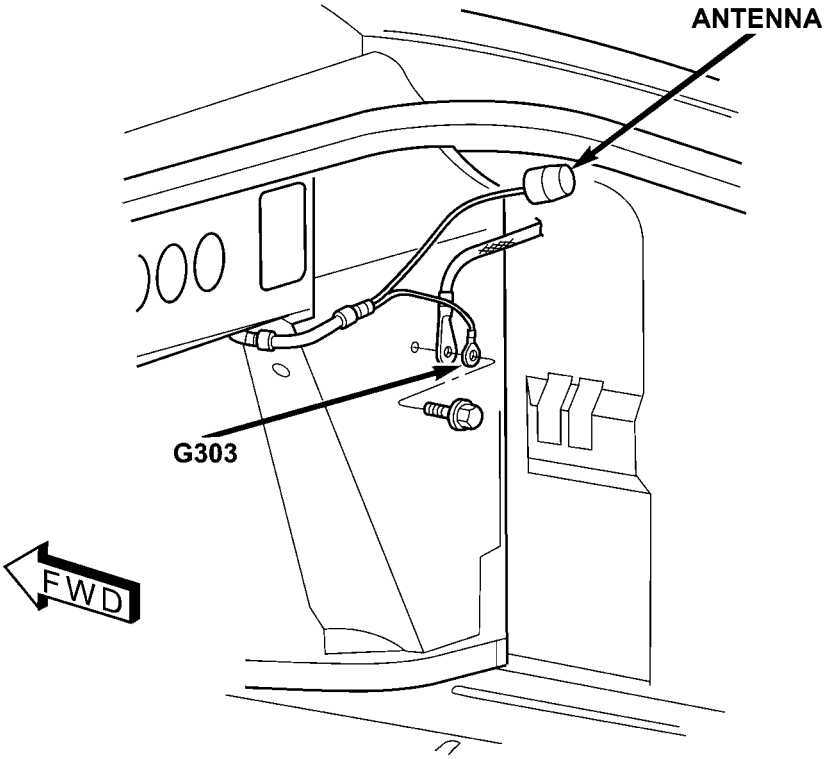

80bca894

Fig. 52 TRUNK CONNECTORS (JR-27)

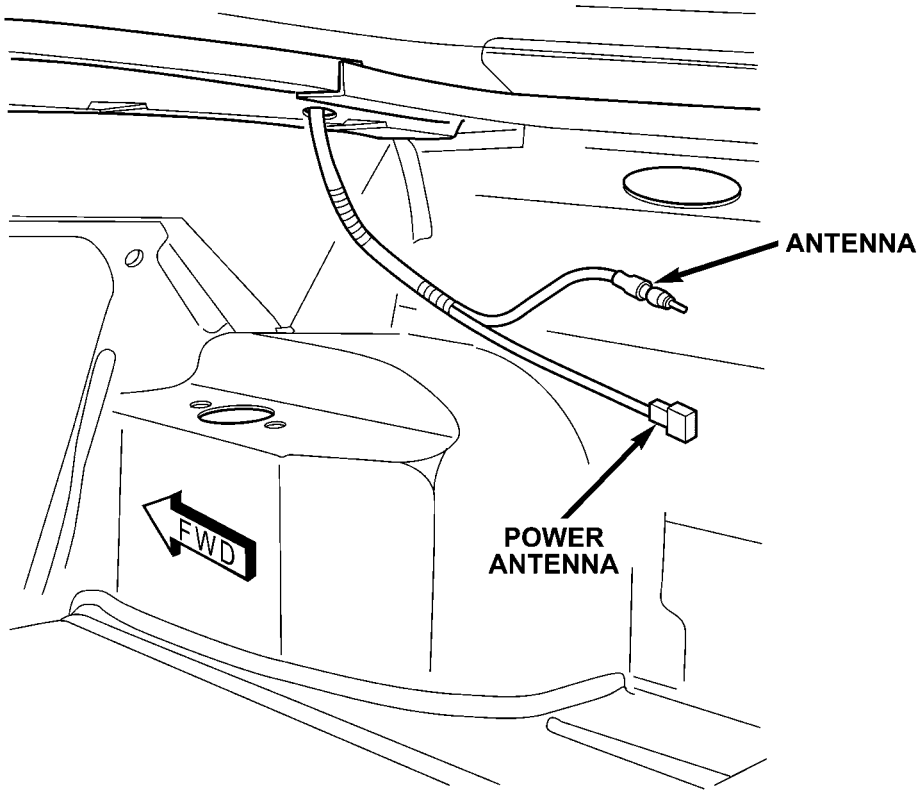

80aa4cd0

Fig. 53 TRUNK CONNECTORS (JR-41)

CONNECTOR/GROUND/SPLICE LOCATION (Continued)

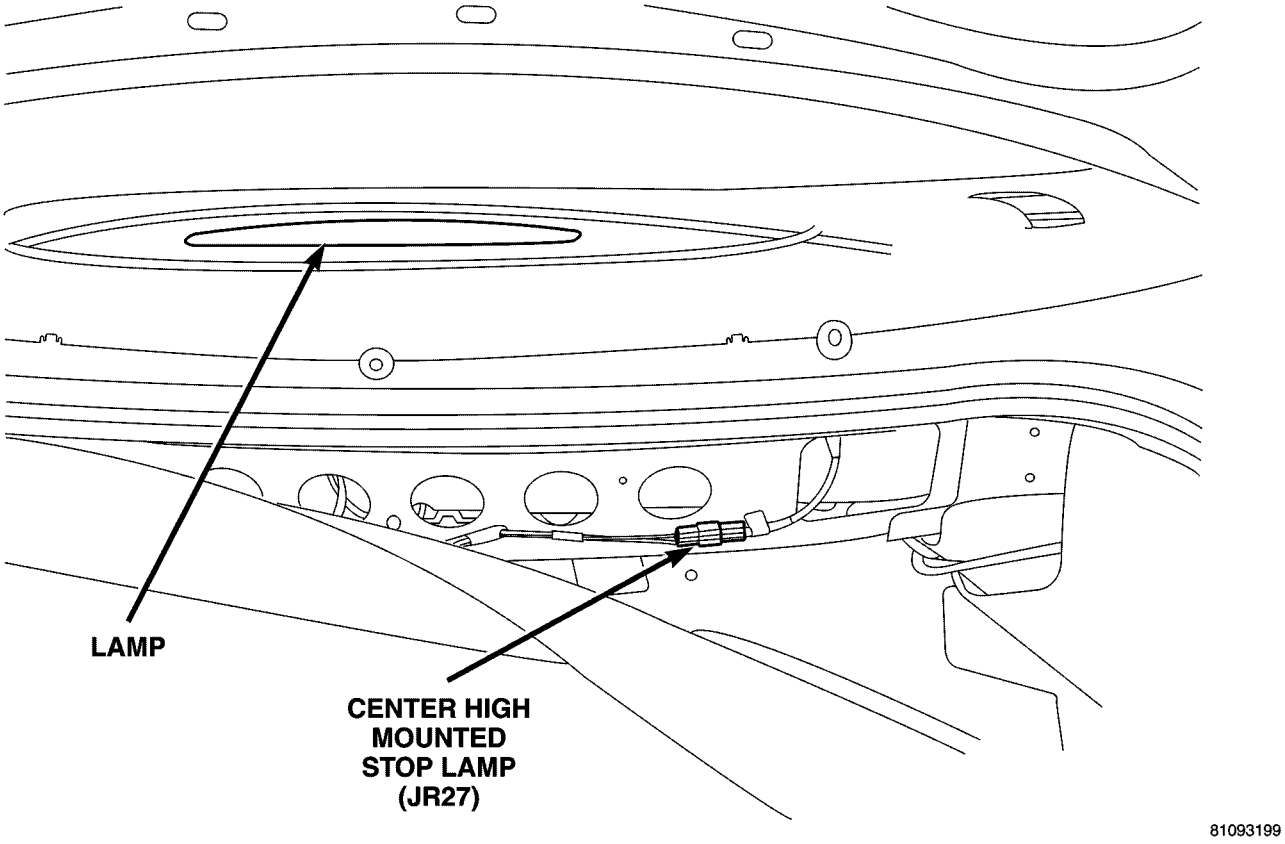

Fig. 54 CENTER HIGH MOUNTED STOP LAMP

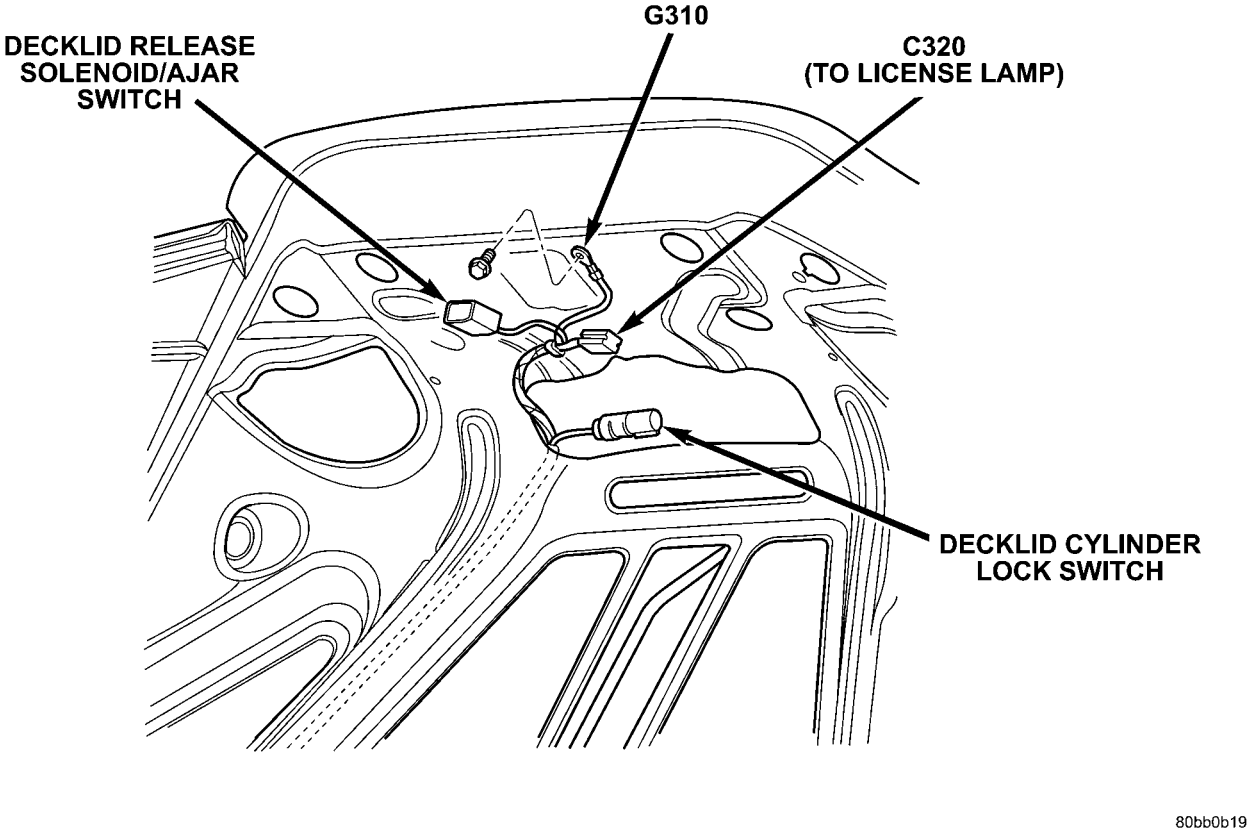

Fig. 55 DECKLID CONNECTORS (JR-27)

CONNECTOR/GROUND/SPLICE LOCATION (Continued)

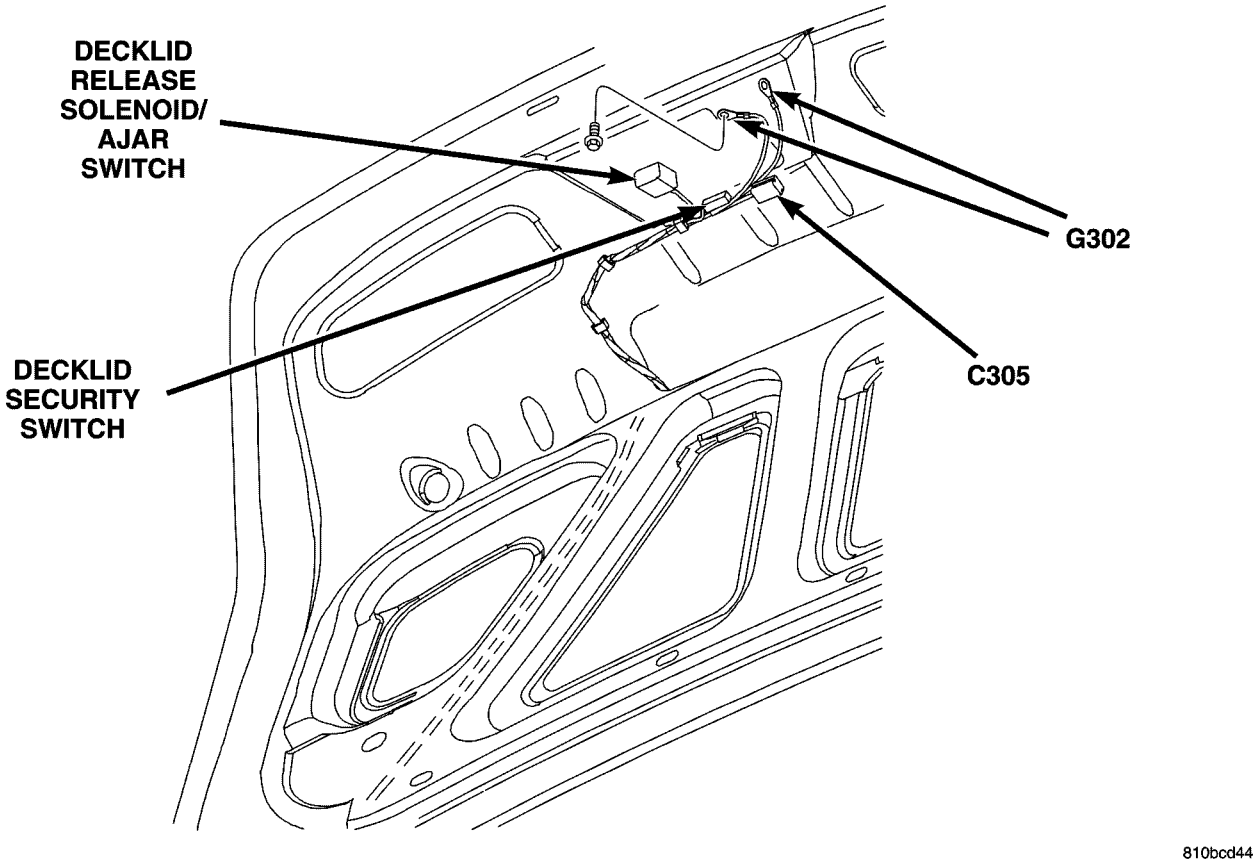

Fig. 56 DECKLID CONNECTORS (JR-41)

8W-97 POWER DISTRIBUTION

TABLE OF CONTENTS

	page
POWER DISTRIBUTION	
DESCRIPTION	1
OPERATION	1
CENTER CONSOLE POWER OUTLET	
REMOVAL	1
INSTALLATION	2
IOD FUSE	
DESCRIPTION	2
OPERATION	2
REMOVAL	3
INSTALLATION	3
JUNCTION BLOCK	
DESCRIPTION	3
OPERATION	3
REMOVAL	3
INSTALLATION	4
POWER DISTRIBUTION CENTER	
DESCRIPTION	4
OPERATION	4
REMOVAL	4
INSTALLATION	5
POWER OUTLET	
REMOVAL	5
INSTALLATION	5

POWER DISTRIBUTION

DESCRIPTION

This group covers the various standard and optional power distribution components used on this model. Refer to the appropriate wiring information. The wiring information includes wiring diagrams, proper wire and connector repair procedures, details of wire harness routing and retention, connector pin-out information and location views for the various wire harness connectors, splices and grounds.

OPERATION

The power distribution system for this vehicle is designed to provide safe, reliable, centralized and convenient access to distribution of the electrical current required to operate all of the many standard and optional factory-installed electrical and electronic powertrain, chassis, safety, comfort and convenience systems. At the same time, these systems were designed to provide centralized locations for conducting diagnosis of faulty circuits, and for sourcing the additional current requirements of many aftermarket vehicle accessory and convenience items.

These power distribution systems also incorporate various types of circuit control and protection features, including:

- Mini and standard fuses
- Cartridge fuses
- Fusible links
- Automatic resetting circuit breakers
- Relays

The power distribution system for this vehicle consists of the following components:

- Power Distribution Center (PDC)
- Junction Block (JB)
- Accessory power outlet.

CENTER CONSOLE POWER OUTLET

REMOVAL

(1) Disconnect and isolate the battery negative cable.

(2) Open the console lid (Fig. 1).

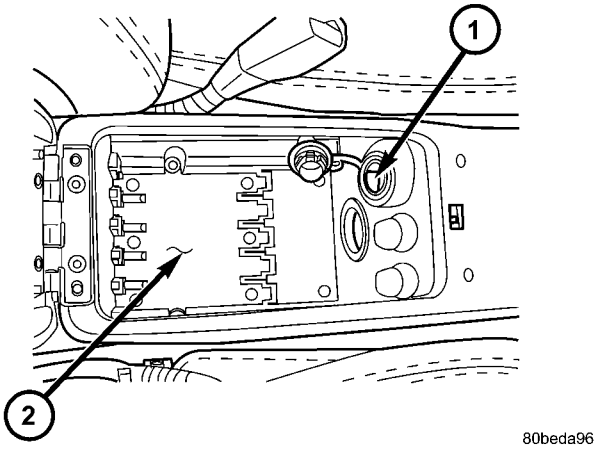

Fig. 1 POWER OUTLET

1 - POWER OUTLET
2 - CENTER CONSOLE

CENTER CONSOLE POWER OUTLET (Continued)

(3) Look inside and note position of the retaining bosses (Fig. 2).

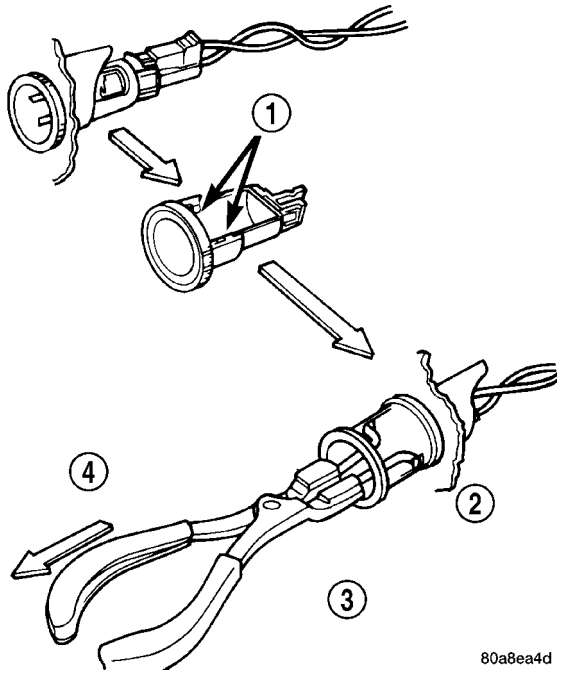

Fig. 2 CIGAR LIGHTER / POWER OUTLET BASE REMOVAL

1 - RETAINING BOSSES-ENGAGE PLIERS HERE
2 - PARTIALLY REMOVED
3 - EXTERNAL SNAP-RING PLIERS
4 - PULL BASE OUT-THROUGH MOUNTING RING

(4) Using external snap ring pliers with 90 degree tips. Insert pliers with tips against bosses and squeeze forcing bosses out of base.

(5) Pull out the base through mounting ring by gently rocking pliers. A tool can be made to do the same. Refer to (Fig. 3).

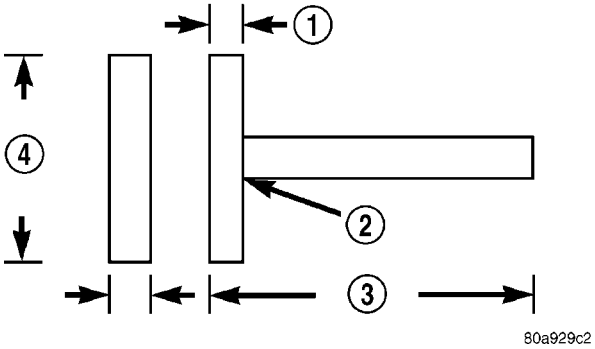

Fig. 3 TOOL FOR CIGAR LIGHTER / POWER OUTLET REMOVAL

1 - 2.5MM (3/32 INS.)
2 - WELD
3 - 100MM (4 INS.)
4 - 22.25 TO 22.45MM (7/8 TO 57/64 INS.)

(6) Disconnect the base wires.

(7) Set base aside and remove base mount ring.

INSTALLATION

(1) Install base mount ring.

(2) Connect the base wires.

(3) Firmly snap base into position inside of the center console.

(4) Connect the battery negative cable.

IOD FUSE

DESCRIPTION

All vehicles are equipped with an Ignition-Off Draw (IOD) fuse that is disconnected within the Junction Block (JB) when the vehicle is shipped from the factory. Dealer personnel are to reconnect the IOD fuse in the JB as part of the preparation procedures performed just prior to new vehicle delivery.

OPERATION

The term ignition-off draw identifies a normal condition where power is being drained from the battery with the ignition switch in the Off position. The IOD fuse feeds the memory and sleep mode functions for some of the electronic modules in the vehicle as well as various other accessories that require battery current when the ignition switch is in the Off position, including the clock. The only reason the IOD fuse is disconnected is to reduce the normal IOD of the vehicle electrical system during new vehicle transportation and pre-delivery storage to reduce battery depletion, while still allowing vehicle operation so that the vehicle can be loaded, unloaded and moved as needed by both vehicle transportation company and dealer personnel.

The IOD fuse is disconnected from Junction Block (JB) fuse cavity 5 when the vehicle is shipped from the assembly plant. Dealer personnel must reconnect the IOD fuse when the vehicle is being prepared for delivery in order to restore full electrical system operation. Once the vehicle is prepared for delivery, the IOD function of this fuse becomes transparent and the fuse that has been assigned the IOD designation becomes only another Fused B(+) circuit fuse. The IOD fuse serves no useful purpose to the dealer technician in the service or diagnosis of any vehicle system or condition, other than the same purpose as that of any other standard circuit protection device.

The IOD fuse can be used by the vehicle owner as a convenient means of reducing battery depletion when a vehicle is to be stored for periods not to exceed about thirty days. However, it must be remembered that disconnecting the IOD fuse will not eliminate IOD, but only reduce this normal condition. If a vehicle will be stored for more than about thirty

IOD FUSE (Continued)

days, the battery negative cable should be disconnected to eliminate normal IOD; and, the battery should be tested and recharged at regular intervals during the vehicle storage period to prevent the battery from becoming discharged or damaged.

REMOVAL

NOTE: When removing or installing the IOD fuse, it is important that the ignition switch be in the Off position. Failure to place the ignition switch in the Off position can cause the radio display to become scrambled when the IOD fuse is installed. Removing and installing the IOD fuse again with the ignition switch in the Off position will usually correct the scrambled radio display condition.

(1) Turn the ignition switch to the Off position.
(2) Remove the cover from the left end cap of the instrument panel.
(3) Pull on IOD fuse holder until it reaches the 1st detent.

INSTALLATION

(1) Push on IOD fuse until completely seated.
(2) Install the cover to instrument panel end cap.

JUNCTION BLOCK

DESCRIPTION

An electrical Junction Block (JB) is located in the left end cap of the instrument panel. The JB combines the functions previously provided by a separate fuse block module and relay center. It also serves to simplify and centralize numerous electrical components, as well as to distribute electrical current to many of the accessory systems in the vehicle. It eliminates the need for numerous splice connections and serves in place of a bulkhead connector between many of the engine compartment, instrument panel, and body wire harnesses.

The JB is positioned on a mounting bracket up and under the left instrument panel (Fig. 4). It is secured by three screws. The JB is concealed behind the left instrument panel endcap. The left instrument panel endcap is a snap-fit fuse access cover that conceals the JB fuses and includes the fuse layout to ensure proper fuse identification. The left instrument panel endcap must be removed to access components other than the fuses in the JB.

OPERATION

All of the current entering and leaving the JB does so through wire harnesses, which are connected to the JB through integral connector receptacles molded

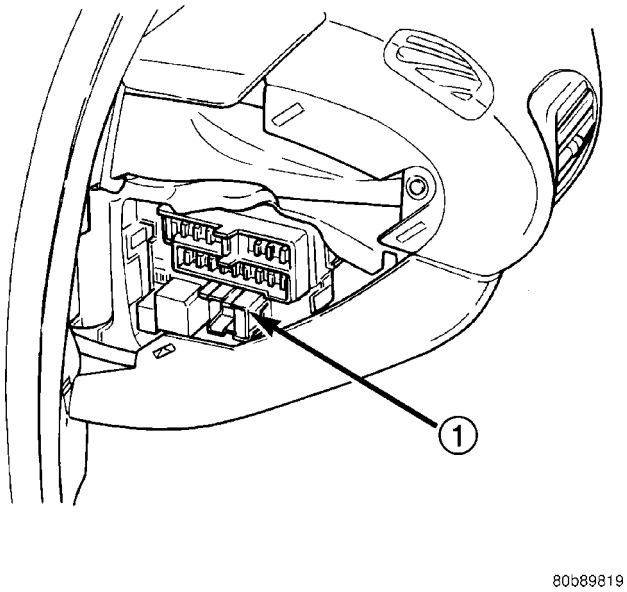

Fig. 4 JUNCTION BLOCK LOCATION

1 - JUNCTION BLOCK

into the JB housing. The JB houses blade-type fuses, blade-type automatic resetting circuit breakers, full International Standards Organization (ISO) mini relays, and ISO micro-relays. Internal connection of all the JB circuits is accomplished by an intricate network of bus bars. Refer to the appropriate wiring information. The wiring information includes wiring diagrams, proper wire and connector repair procedures, details of wire harness routing and retention, connector pin-out information and location views for the various wire harness connectors, splices and grounds.

The fuses, circuit breakers and relays are available for service replacement. The JB unit cannot be repaired and is only serviced as an assembly. If any internal circuit or the JB housing is faulty or damaged, the entire Junction Block assembly must be replaced.

REMOVAL

WARNING:
ON VEHICLES EQUIPPED WITH AIRBAGS, REFER TO ELECTRICAL/RESTRAINTS BEFORE ATTEMPTING ANY STEERING WHEEL, STEERING COLUMN, OR INSTRUMENT PANEL COMPONENT DIAGNOSIS OR SERVICE. FAILURE TO TAKE THE PROPER PRECAUTIONS COULD RESULT IN ACCIDENTAL AIRBAG DEPLOYMENT AND POSSIBLE PERSONAL INJURY.

JUNCTION BLOCK (Continued)

The Junction Block (JB) and Body Control Module (BCM) are attached to each other. After removal they can be separated. Junction Block and Body Control Module assemblies are located on the driver's side of the vehicle (Fig. 5).

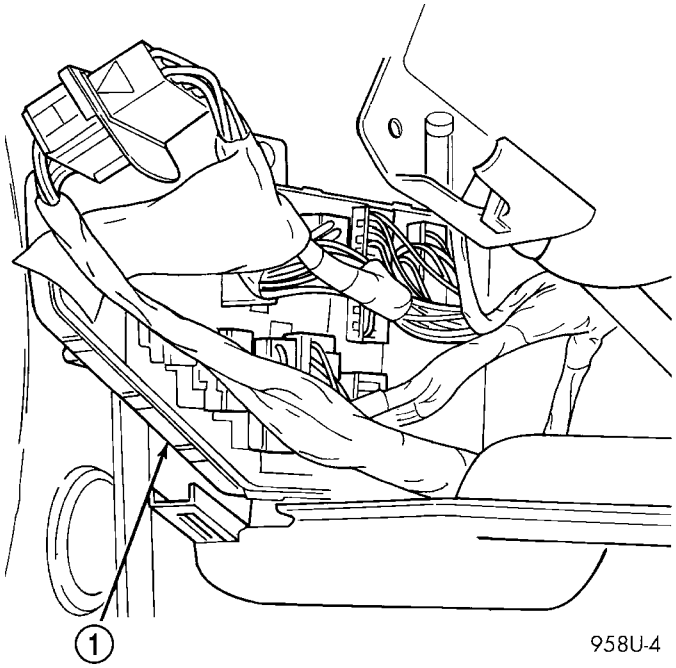

Fig. 5 JUNCTION BLOCK/BCM

1 - JUNCTION/BCM

(1) Disconnect and isolate the battery negative remote cable from the remote terminal on the left shock tower.

(2) Open the front driver's door and remove end cap.

(3) Remove center bezel.

(4) Remove instrument cluster hood.

(5) Remove silencer.

(6) Remove wire harness connectors from Junction Block.

(7) Remove Junction Block three mounting screws.

(8) Disconnect BCM wire connectors and remove the assembly.

(9) Remove Junction Block/BCM from vehicle.

(10) With the Junction Block/BCM removed from the vehicle, separate the BCM from the Junction Block.

(11) Remove the BCM attaching screws.

(12) Disconnect BCM from the Junction Block.

INSTALLATION

(1) Connect BCM to the Junction Block.

(2) Install the BCM to the Junction Block and install the attaching screws.

(3) Install Junction Block/BCM to vehicle.

(4) Connect BCM wire connectors.

(5) Install Junction Block mounting screws.

(6) Connect wire harness connectors to Junction Block.

(7) Install silencer.

(8) Install instrument cluster hood.

(9) Install center bezel.

(10) Install end cap.

(11) Connect battery negative cable.

POWER DISTRIBUTION CENTER

DESCRIPTION

All of the electrical current distributed throughout this vehicle is directed through the standard equipment Power Distribution Center (PDC). The molded plastic PDC housing is located in the left front corner of the engine compartment. The PDC housing has a molded plastic cover that is retained by two latches.

A small red molded plastic protective cover on the top near the front of the PDC is unsnapped to access the battery/generator cable input connection stud. All of the PDC outputs are through the integral headlamp/dash wire harness, which exits from the rear of the PDC housing.

OPERATION

The PDC houses up to fourteen cartridge fuses, which replace all in-line fusible links. The PDC also houses up to eleven blade-type fuses, up to four full International Standards Organization (ISO) mini relays, and up to eight ISO micro-relays. Internal connection of all the PDC circuits is accomplished by an intricate network of hard wiring and a bus bar. Refer to the appropriate wiring information. The wiring information includes wiring diagrams, proper wire and connector repair procedures, details of wire harness routing and retention, connector pin-out information and location views for the various wire harness connectors, splices and grounds.

The fusible link, fuse cartridges, fuses and relays are available for service replacement. The PDC unit cannot be repaired and is only serviced as a unit with the wire harness. If the PDC is faulty or damaged, the wire harness assembly must be replaced.

REMOVAL

The Power Distribution Center (PDC) is serviced as a unit with the headlamp/dash wire harness. If any internal circuit of the PDC or the PDC housing is faulty or damaged, the entire PDC and headlamp/dash wire harness unit must be replaced.

(1) Disconnect and isolate the battery negative cable.

POWER DISTRIBUTION CENTER (Continued)

(2) Remove the Air Inlet System (housing and resonator).

(3) Disconnect each of the wire harness connectors. Refer to the appropriate wiring information. The wiring information includes wiring diagrams, proper wire and connector repair procedures, details of wire harness routing and retention, connector pin-out information and location views for the various wire harness connectors, splices and grounds.

(4) Remove the fasteners that secure each of the wire harness ground eyelets to the vehicle body and chassis components.

(5) Disengage each of the retainers that secure the engine compartment wire harness to the vehicle body and chassis components.

(6) Remove the nut retaining the PDC to its mounting bracket.

(7) Remove the PDC and the wire harness from the engine compartment as a unit.

INSTALLATION

(1) Position the PDC in the engine compartment.

(2) Align the PDC mounting slots with the blades on the PDC mounting bracket.

(3) Install the mounting nut onto the PDC.

(4) Route the wire harness from the PDC through the engine compartment, engaging each of the harness retainers to the mounting provisions in the vehicle body and chassis components. Refer to the appropriate wiring information. The wiring information includes wiring diagrams, proper wire and connector repair procedures, details of wire harness routing and retention, connector pin-out information and location views for the various wire harness connectors, splices and grounds.

(5) Install and tighten the fasteners that secure each of the engine compartment wire harness ground eyelets to the vehicle body and chassis components.

(6) Reconnect each of the wire harness connectors.

(7) Connect the battery negative cable.

POWER OUTLET

REMOVAL

(1) Disconnect and isolate the battery negative cable.

(2) Remove left side console lower cover.

(3) Disconnect wire harness connectors from power outlet.

(4) Twist power outlet retainer from the back of power outlet.

(5) Remove power outlet.

INSTALLATION

(1) Install power outlet to instrument panel.

(2) Install retainer to power outlet.

(3) Connect wire harness connectors.

(4) Install left side console lower cover.

(5) Connect battery negative cable.

ENGINE

TABLE OF CONTENTS

page

ENGINE 2.0L DOHC 1
ENGINE 2.4L DOHC 71
ENGINE 2.7L DOHC 143

ENGINE 2.0L DOHC

TABLE OF CONTENTS

page

ENGINE 2.0L DOHC
DESCRIPTION 3
DIAGNOSIS AND TESTING
DIAGNOSIS AND TESTING - ENGINE DIAGNOSIS - INTRODUCTION 4
DIAGNOSIS AND TESTING - ENGINE DIAGNOSIS - PERFORMANCE 5
DIAGNOSIS AND TESTING - ENGINE DIAGNOSIS - MECHANICAL 7
DIAGNOSIS AND TESTING - CYLINDER COMPRESSION PRESSURE TEST 9
DIAGNOSIS AND TESTING - CYLINDER COMBUSTION PRESSURE LEAKAGE TEST 9
DIAGNOSIS AND TESTING - ENGINE OIL LEAK INSPECTION 9
STANDARD PROCEDURE
STANDARD PROCEDURE - REPAIR OF DAMAGED OR WORN THREADS 10
STANDARD PROCEDURE - HYDROSTATIC LOCKED ENGINE 10
STANDARD PROCEDURE - FORM-IN-PLACE GASKETS AND SEALERS 11
STANDARD PROCEDURE - ENGINE GASKET SURFACE PREPARATION 12
STANDARD PROCEDURE - MEASURING BEARING CLEARANCE USING PLASTIGAGE 12
STANDARD PROCEDURE - ENGINE CORE AND OIL GALLERY PLUGS 13
REMOVAL - ENGINE ASSEMBLY 13
INSTALLATION - ENGINE ASSEMBLY 16
SPECIFICATIONS
2.0L DOHC ENGINE 17
TORQUE 20
SPECIAL TOOLS
2.0L DOHC ENGINE 20
AIR CLEANER ELEMENT
REMOVAL 24
INSTALLATION 24
AIR CLEANER HOUSING
REMOVAL 24
INSTALLATION 24
CYLINDER HEAD
DESCRIPTION 24
DIAGNOSIS AND TESTING—CYLINDER HEAD GASKET 24
REMOVAL - CYLINDER HEAD 25
CLEANING 26
INSPECTION 26
INSTALLATION - CYLINDER HEAD 27
CAMSHAFT OIL SEAL(S)
REMOVAL 28
INSTALLATION 28
CAMSHAFT(S)
DESCRIPTION 29
OPERATION 29
STANDARD PROCEDURE - CAMSHAFT END-PLAY 29
REMOVAL 29
CLEANING 30
INSPECTION 30
INSTALLATION 30
CYLINDER HEAD COVER
REMOVAL 31
CLEANING 31
INSPECTION 31
INSTALLATION 31

HYDRAULIC LASH ADJUSTERS
DIAGNOSIS AND TESTING
HYDRAULIC LASH ADJUSTER NOISE DIAGNOSIS . . . 32
REMOVAL . . . 33
INSTALLATION . . . 33
INTAKE/EXHAUST VALVES & SEATS
DESCRIPTION . . . 33
OPERATION . . . 33
CLEANING . . . 33
ROCKER ARMS
REMOVAL . . . 33
INSPECTION . . . 34
INSTALLATION . . . 34
VALVE SPRINGS AND SEALS
REMOVAL
REMOVAL - CYLINDER HEAD ON . . . 34
REMOVAL - CYLINDER HEAD OFF . . . 34
INSPECTION . . . 35
INSTALLATION
INSTALLATION - CYLINDER HEAD ON . . . 35
INSTALLATION - CYLINDER HEAD OFF . . . 35
ENGINE BLOCK
DESCRIPTION . . . 36
STANDARD PROCEDURE - CYLINDER BORE HONING . . . 36
CLEANING . . . 37
INSPECTION . . . 37
CRANKSHAFT
STANDARD PROCEDURE - CRANKSHAFT END PLAY . . . 37
REMOVAL - CRANKSHAFT . . . 37
INSPECTION . . . 39
INSTALLATION - CRANKSHAFT . . . 39
CRANKSHAFT OIL SEAL - FRONT
REMOVAL . . . 41
INSTALLATION . . . 42
CRANKSHAFT OIL SEAL - REAR
REMOVAL . . . 43
INSTALLATION . . . 43
PISTON & CONNECTING ROD
DESCRIPTION . . . 44
STANDARD PROCEDURE - PISTON TO CYLINDER BORE FITTING . . . 44
REMOVAL . . . 44
INSTALLATION . . . 46
CONNECTING ROD BEARINGS
STANDARD PROCEDURE
CONNECTING ROD - FITTING . . . 47
PISTON RINGS
STANDARD PROCEDURE - PISTON RING - FITTING . . . 47
REMOVAL . . . 48
INSTALLATION . . . 48
STRUCTURAL COLLAR
REMOVAL . . . 49
INSTALLATION . . . 49
VIBRATION DAMPER
REMOVAL . . . 49
INSTALLATION . . . 50
ENGINE MOUNTING
ADJUSTMENTS
ENGINE SUPPORT ADJUSTMENT . . . 50
LEFT MOUNT
REMOVAL . . . 51
INSTALLATION . . . 51
RIGHT MOUNT
REMOVAL . . . 51
INSTALLATION . . . 51
FRONT MOUNT
REMOVAL . . . 52
INSTALLATION . . . 52
REAR MOUNT
REMOVAL . . . 52
INSTALLATION . . . 52
LUBRICATION
DESCRIPTION . . . 53
OPERATION . . . 54
DIAGNOSIS AND TESTING - CHECKING ENGINE OIL PRESSURE . . . 54
OIL
STANDARD PROCEDURE
ENGINE OIL LEVEL CHECK . . . 54
STANDARD PROCEDURE - ENGINE OIL AND FILTER CHANGE . . . 54
OIL FILTER
REMOVAL . . . 56
INSTALLATION . . . 56
OIL FILTER ADAPTER
REMOVAL . . . 56
INSTALLATION . . . 56
OIL PAN
REMOVAL . . . 56
INSTALLATION . . . 57
OIL PRESSURE SENSOR/SWITCH
REMOVAL . . . 57
INSTALLATION . . . 57
OIL PUMP
REMOVAL . . . 57
DISASSEMBLY . . . 58
INSPECTION . . . 59
ASSEMBLY . . . 60
INSTALLATION . . . 60
INTAKE MANIFOLD
DIAGNOSIS AND TESTING - INTAKE MANIFOLD LEAKS . . . 62
REMOVAL . . . 62
CLEANING . . . 62
INSPECTION . . . 62
INSTALLATION . . . 62
EXHAUST MANIFOLD
REMOVAL . . . 63
CLEANING . . . 63
INSPECTION . . . 63

INSTALLATION 64
VALVE TIMING
STANDARD PROCEDURE - VALVE TIMING VERIFICATION 64
TIMING BELT COVER(S)
REMOVAL 64
INSTALLATION 65
TIMING BELT AND SPROCKETS
REMOVAL
REMOVAL - TIMING BELT 66
REMOVAL - CAMSHAFT SPROCKET(S) 67
REMOVAL - CRANKSHAFT SPROCKET 67
CLEANING 68
INSTALLATION
INSTALLATION - CRANKSHAFT SPROCKET . 68
INSTALLATION - CAMSHAFT SPROCKETS . . 68
INSTALLATION - TIMING BELT 68
TIMING BELT TENSIONER & PULLEY
REMOVAL 70
INSTALLATION 70

ENGINE 2.0L DOHC

DESCRIPTION

The 2.0 Liter (122 cu. in.) in-line four cylinder engine is a dual over-head camshaft with hydraulic lash adjusters and four valves per cylinder design (Fig. 1). The engine does not have provisions for a free wheeling valvetrain.

The cylinders are numbered from front of the engine to the rear. The firing order is 1–3–4–2.

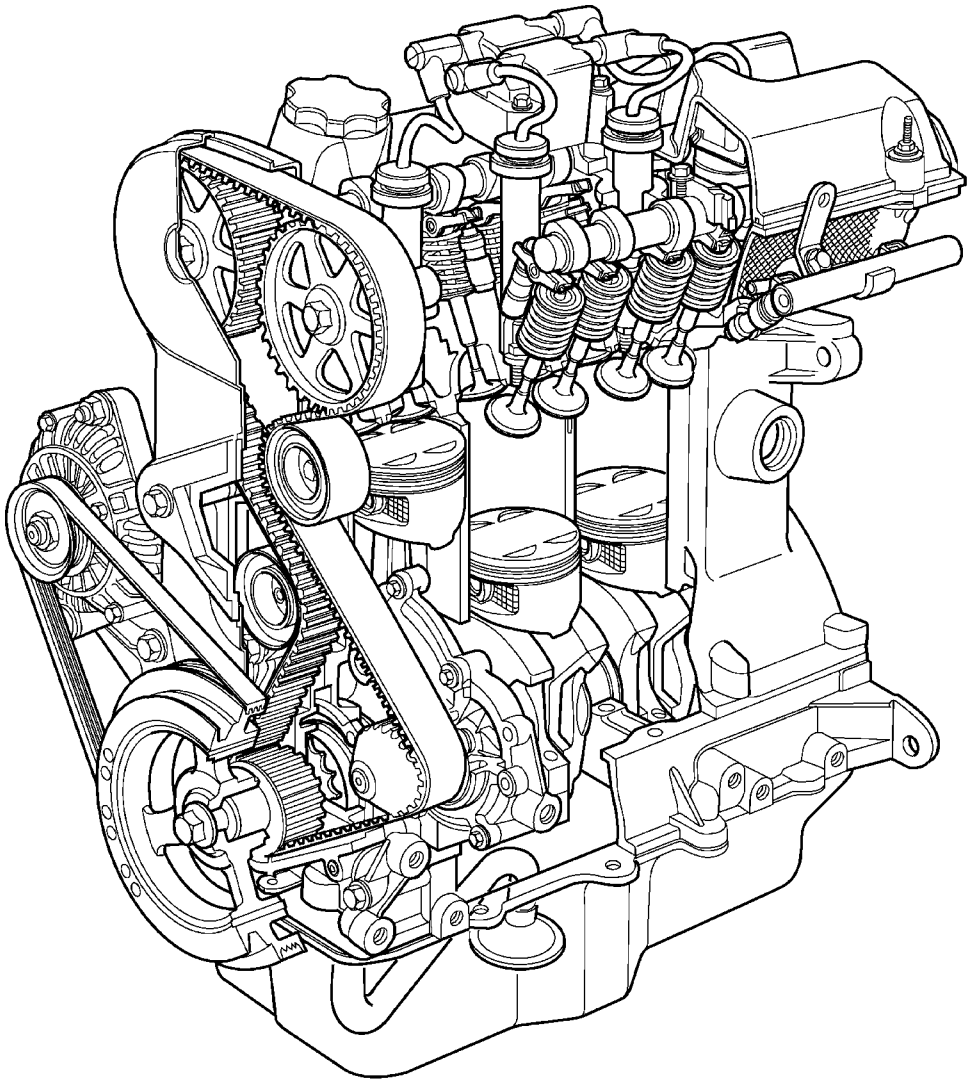

80c06eea

Fig. 1 2.0L DOHC Engine

ENGINE 2.0L DOHC (Continued)

The engine identification number is located on the left side of the engine block at the bedplate/engine block parting line near the crankshaft position sensor (Fig. 2).

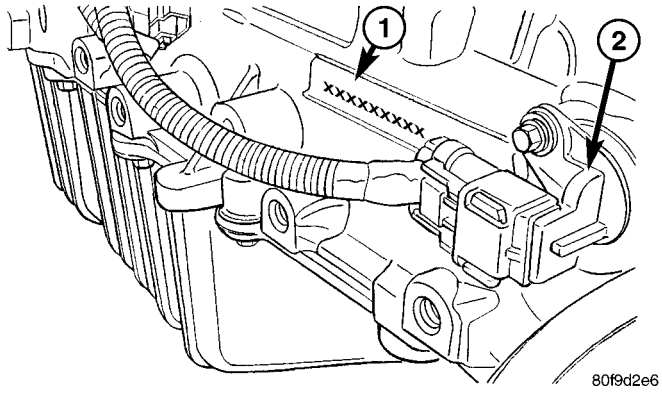

Fig. 2 Engine Identification

1 - ENGINE IDENTIFICATION LOCATION
2 - CRANKSHAFT POSITION SENSOR

DIAGNOSIS AND TESTING

DIAGNOSIS AND TESTING - ENGINE DIAGNOSIS - INTRODUCTION

Engine diagnosis is helpful in determining the causes of malfunctions not detected and remedied by routine maintenance.

These malfunctions may be classified as either mechanical (e.g., a strange noise), or performance (e.g., engine idles rough and stalls).

Refer to the Engine Mechanical and the Engine Performance diagnostic charts, for possible causes and corrections of malfunctions (Refer to 9 - ENGINE - DIAGNOSIS AND TESTING - MECHANICAL) (Refer to 9 - ENGINE - DIAGNOSIS AND TESTING - PERFORMANCE).

For fuel system diagnosis, (Refer to 14 - FUEL SYSTEM/FUEL DELIVERY - DIAGNOSIS AND TESTING).

Additional tests and diagnostic procedures may be necessary for specific engine malfunctions that cannot be isolated with the Service Diagnosis charts. Information concerning additional tests and diagnosis is provided within the following:

- Cylinder Compression Pressure Test
- Cylinder Combustion Pressure Leakage Test
- Engine Cylinder Head Gasket Failure Diagnosis
- Intake Manifold Leakage Diagnosis
- Hydraulic Lash Adjuster Noise Diagnosis
- Engine Oil Leak Inspection

ENGINE 2.0L DOHC (Continued)

DIAGNOSIS AND TESTING - ENGINE DIAGNOSIS - PERFORMANCE

CONDITION	POSSIBLE CAUSE	CORRECTION
ENGINE WILL NOT START	1. Weak battery.	1. Test battery. Charge or replace as necessary. (Refer to 8 - ELECTRICAL/BATTERY SYSTEM - DIAGNOSIS AND TESTING)
	2. Corroded or loose battery connections.	2. Clean and tighten battery connections. Apply a coat of light mineral grease to terminals.
	3. Faulty starter.	3. Test starting system. (Refer to 8 - ELECTRICAL/STARTING - DIAGNOSIS AND TESTING)
	4. Faulty coil(s) or control unit.	4. Test and replace as needed. (Refer to Appropriate Diagnostic Information)
	5. Incorrect spark plug gap.	5. Set gap. (Refer to 8 - ELECTRICAL/IGNITION CONTROL - SPECIFICATIONS)
	6. Contamination in fuel system.	6. Clean system and replace fuel filter.
	7. Faulty fuel pump.	7. Test fuel pump and replace as needed. (Refer to Appropriate Diagnostic Information)
	8. Incorrect engine timing.	8. Check for a skipped timing belt/chain.
ENGINE STALLS OR IDLES ROUGH	1. Idle speed too low.	1. Test minimum air flow. (Refer to Appropriate Diagnostic Information)
	2. Incorrect fuel mixture.	2. (Refer to Appropriate Diagnostic Information)
	3. Intake manifold leakage.	3. Inspect intake manifold, manifold gasket, and vacuum hoses.
	4. Faulty ignition coil(s).	4. Test and replace as necessary. (Refer to Appropriate Diagnostic Information)

ENGINE 2.0L DOHC (Continued)

CONDITION	POSSIBLE CAUSE	CORRECTION
ENGINE LOSS OF POWER	1. Dirty or incorrectly gapped plugs.	1. Clean plugs and set gap.
	2. Contamination in fuel system.	2. Clean system and replace fuel filter.
	3. Faulty fuel pump.	3. Test and replace as necessary. (Refer to Appropriate Diagnostic Information)
	4. Incorrect valve timing.	4. Correct valve timing.
	5. Leaking cylinder head gasket.	5. Replace cylinder head gasket.
	6. Low compression.	6. Test compression of each cylinder.
	7. Burned, warped, or pitted valves.	7. Replace valves.
	8. Plugged or restricted exhaust system.	8. Perform exhaust restriction test. (Refer to 11 - EXHAUST SYSTEM - DIAGNOSIS AND TESTING) Install new parts, as necessary.
	9. Faulty ignition coil(s).	9. Test and replace as necessary. (Refer to Appropriate Diagnostic Information)
ENGINE MISSES ON ACCELERATION	1. Dirty or incorrectly gapped spark plugs.	1. Clean spark plugs and set gap.
	2. Contamination in Fuel System.	2. Clean fuel system and replace fuel filter.
	3. Burned, warped, or pitted valves.	3. Replace valves.
	4. Faulty ignition coil(s).	4. Test and replace as necessary. (Refer to Appropriate Diagnostic Information)
ENGINE MISSES AT HIGH SPEED	1. Dirty or incorrect spark plug gap.	1. Clean spark plugs and set gap.
	2. Faulty ignition coil(s).	2. Test and replace as necessary. (Refer to Appropriate Diagnostic Information)
	3. Dirty fuel injector(s).	3. Test and replace as necessary. (Refer to Appropriate Diagnostic Information)
	4. Contamination in fuel system.	4. Clean system and replace fuel filter.

ENGINE 2.0L DOHC (Continued)

DIAGNOSIS AND TESTING - ENGINE DIAGNOSIS - MECHANICAL

CONDITION	POSSIBLE CAUSES	CORRECTION
NOISY VALVES	1. High or low oil level in crankcase.	1. Check and correct engine oil level.
	2. Thin or diluted oil.	2. Change oil to correct viscosity.
	3. Thick oil	3. a) Change engine oil and filter. (b) Run engine to operating temperature. (c) Change engine oil and filter again.
	4. Low oil pressure.	4. Check and correct engine oil level.
	5. Dirt in tappets/lash adjusters.	5. Replace rocker arm/hydraulic lash adjuster assembly.
	6. Worn rocker arms.	6. Inspect oil supply to rocker arms.
	7. Worn tappets/lash adjusters.	7. Install new rocker arm/hydraulic lash adjuster assembly.
	8. Worn valve guides.	8. Ream guides and install new valves with oversize stems.
	9. Excessive runout of valve seats on valve faces.	9. Grind valve seats and valves.
	10. Missing adjuster pivot.	10. Replace rocker arm/hydraulic lash adjuster assembly.
CONNECTING ROD NOISE	1. Insufficient oil supply.	1. Check engine oil level.
	2. Low oil pressure.	2. Check engine oil level. Inspect oil pump relief valve and spring.
	3. Thin or diluted oil.	3. Change oil to correct viscosity.
	4. Thick oil	4. (a) Change engine oil and filter. (b) Run engine to operating temperature. (c) Change engine oil and filter again.
	5. Excessive bearing clearance.	5. Measure bearings for correct clearance. Repair as necessary.
	6. Connecting rod journal out-of-round.	6. Replace crankshaft or grind surface.
	7. Misaligned connecting rods.	7. Replace bent connecting rods.
MAIN BEARING NOISE	1. Insufficient oil supply.	1. Check engine oil level.
	2. Low oil pressure.	2. Check engine oil level. Inspect oil pump relief valve and spring.
	3. Thin or diluted oil.	3. Change oil to correct viscosity.
	4. Thick oil	4. (a) Change engine oil and filter. (b) Run engine to operating temperature. (c) Change engine oil and filter again.
	5. Excessive bearing clearance.	5. Measure bearings for correct clearance. Repair as necessary.
	6. Excessive end play.	6. Check thrust bearing for wear on flanges.
	7. Crankshaft journal out-of-round or worn.	7. Replace crankshaft or grind journals.
	8. Loose flywheel or torque converter.	8. Tighten to correct torque.

ENGINE 2.0L DOHC (Continued)

CONDITION	POSSIBLE CAUSES	CORRECTION
OIL PRESSURE DROP	1. Low oil level.	1. Check engine oil level.
	2. Faulty oil pressure sending unit.	2. Install new sending unit.
	3. Low oil pressure.	3. Check sending unit and main bearing oil clearance.
	4. Clogged oil filter.	4. Install new oil filter.
	5. Worn parts in oil pump.	5. Replace worn parts or pump.
	6. Thin or diluted oil.	6. Change oil to correct viscosity.
	7. Oil pump relief valve stuck.	7. Remove valve and inspect, clean, or replace.
	8. Oil pump suction tube loose.	8. Remove oil pan and install new tube or clean, if necessary.
	9. Oil pump cover warped or cracked.	9. Install new oil pump.
	10. Excessive bearing clearance.	10. Measure bearings for correct clearance.
OIL LEAKS	1. Misaligned or deteriorated gaskets.	1. Replace gasket(s).
	2. Loose fastener, broken or porous metal part.	2. Tighten, repair or replace the part.
	3. Misaligned or deteriorated cup or threaded plug.	3. Replace as necessary.
OIL CONSUMPTION OR SPARK PLUGS FOULED	1. PCV system malfunction.	1. Check system and repair as necessary. (Refer to 25 - EMISSIONS CONTROL/EVAPORATIVE EMISSIONS/ PCV VALVE - DIAGNOSIS AND TESTING)
	2. Worn, scuffed or broken rings.	2. Hone cylinder bores. Install new rings.
	3. Carbon in oil ring slots.	3. Install new rings.
	4. Rings fitted too tightly in grooves.	4. Remove rings and check grooves. If groove is not proper width, replace piston.
	5. Worn valve guide(s).	5. Ream guide(s) and replace valve(s) with oversize valve(s) and seal(s).
	6. Valve stem seal(s) worn or damaged.	6. Replace seal(s).

ENGINE 2.0L DOHC (Continued)

DIAGNOSIS AND TESTING - CYLINDER COMPRESSION PRESSURE TEST

The results of a cylinder compression pressure test can be utilized to diagnose several engine malfunctions.

Ensure the battery is completely charged and the engine starter motor is in good operating condition. Otherwise the indicated compression pressures may not be valid for diagnosis purposes.

(1) Check engine oil level and add oil if necessary.

(2) Drive the vehicle until engine reaches normal operating temperature. Select a route free from traffic and other forms of congestion, observe all traffic laws, and accelerate through the gears several times briskly.

(3) Remove all spark plugs from engine. As spark plugs are being removed, check electrodes for abnormal firing indicators fouled, hot, oily, etc. Record cylinder number of spark plug for future reference.

(4) Remove the Auto Shutdown (ASD) relay from the PDC.

(5) Be sure throttle blade is fully open during the compression check.

(6) Insert compression gauge adaptor Special Tool 8116 or the equivalent, into the #1 spark plug hole in cylinder head. Connect the 0–500 psi (Blue) pressure transducer (Special Tool CH7059) with cable adaptors to the DRBIII®. For Special Tool identification, (Refer to 9 - ENGINE - SPECIAL TOOLS).

(7) Crank engine until maximum pressure is reached on gauge. Record this pressure as #1 cylinder pressure.

(8) Repeat the previous step for all remaining cylinders.

(9) Compression should not be less than 689 kPa (100 psi) and not vary more than 25 percent from cylinder to cylinder.

(10) If one or more cylinders have abnormally low compression pressures, repeat the compression test.

(11) If the same cylinder or cylinders repeat an abnormally low reading on the second compression test, it could indicate the existence of a problem in the cylinder in question. **The recommended compression pressures are to be used only as a guide to diagnosing engine problems. An engine should not be disassembled to determine the cause of low compression unless some malfunction is present.**

DIAGNOSIS AND TESTING - CYLINDER COMBUSTION PRESSURE LEAKAGE TEST

The combustion pressure leakage test provides an accurate means for determining engine condition.

Combustion pressure leakage testing will detect:

- Exhaust and intake valve leaks (improper seating).
- Leaks between adjacent cylinders or into water jacket.
- Any causes for combustion/compression pressure loss.

WARNING: DO NOT REMOVE THE PRESSURE CAP WITH THE SYSTEM HOT AND UNDER PRESSURE BECAUSE SERIOUS BURNS FROM COOLANT CAN OCCUR.

Check the coolant level and fill as required. DO NOT install the pressure cap.

Start and operate the engine until it attains normal operating temperature, then turn the engine OFF.

Clean spark plug recesses with compressed air.

Remove the spark plugs.

Remove the oil filler cap.

Remove the air cleaner.

Calibrate the tester according to the manufacturer's instructions. The shop air source for testing should maintain 483 kPa (70 psi) minimum, 1,379 kPa (200 psi) maximum, with 552 kPa (80 psi) recommended.

Perform the test procedures on each cylinder according to the tester manufacturer's instructions. While testing, listen for pressurized air escaping through the throttle body, tailpipe and oil filler cap opening. Check for bubbles in the coolant.

All gauge pressure indications should be equal, with no more than 25% leakage per cylinder.

FOR EXAMPLE: At 552 kPa (80 psi) input pressure, a minimum of 414 kPa (60 psi) should be maintained in the cylinder.

DIAGNOSIS AND TESTING - ENGINE OIL LEAK INSPECTION

Begin with a thorough visual inspection of the engine, particularly at the area of the suspected leak. If an oil leak source is not readily identifiable, the following steps should be followed:

(1) Do not clean or degrease the engine at this time because some solvents may cause rubber to swell, temporarily stopping the leak.

(2) Add an oil soluble dye (use as recommended by manufacturer). Start the engine and let idle for approximately 15 minutes. Check the oil dipstick to make sure the dye is thoroughly mixed as indicated with a bright yellow color under a black light.

(3) Using a black light, inspect the entire engine for fluorescent dye, particularly at the suspected area of oil leak. If the oil leak is found and identified, repair as necessary.

(4) If dye is not observed, drive the vehicle at various speeds for approximately 24 km (15 miles), and repeat inspection.

ENGINE 2.0L DOHC (Continued)

(5) **If the oil leak source is not positively identified at this time**, proceed with the air leak detection test method as follows:

- Disconnect the fresh air hose (make-up air) at the cylinder head cover and plug or cap the nipple on the cover.
- Remove the PCV valve hose from the cylinder head cover. Cap or plug the PCV valve nipple on the cover.
- Attach an air hose with pressure gauge and regulator to the dipstick tube.

CAUTION: Do not subject the engine assembly to more than 20.6 kpa (3 PSI) of test pressure.

- Gradually apply air pressure from 1 psi to 2.5 psi maximum while applying soapy water at the suspected source. Adjust the regulator to the suitable test pressure that provides the best bubbles which will pinpoint the leak source. If the oil leak is detected and identified, repair per service manual procedures.
- If the leakage occurs at the crankshaft rear oil seal area, refer to the section, Inspection for Rear Seal Area Leak.

(6) If no leaks are detected, turn off the air supply. Remove the air hose, all plugs, and caps. Install the PCV valve and fresh air hose (make-up air). Proceed to next step.

(7) Clean the oil off the suspect oil leak area using a suitable solvent. Drive the vehicle at various speeds approximately 24 km (15 miles). Inspect the engine for signs of an oil leak by using a black light.

NOTE: If oil leakage is observed at the dipstick tube to block location; remove the tube, clean and reseal using Mopar® Stud & Bearing Mount (press fit tube applications only), and for O-ring style tubes, remove tube and replace the O-ring seal.

INSPECTION FOR REAR SEAL AREA LEAKS

Since it is sometimes difficult to determine the source of an oil leak in the rear seal area of the engine, a more involved inspection is necessary. The following steps should be followed to help pinpoint the source of the leak.

If the leakage occurs at the crankshaft rear oil seal area:

(1) Disconnect the battery.

(2) Raise the vehicle.

(3) Remove torque converter or clutch housing cover and inspect rear of block for evidence of oil. Use a black light to check for the oil leak. If a leak is present in this area, remove transmission for further inspection.

(a) Circular spray pattern generally indicates seal leakage or crankshaft damage.

(b) Where leakage tends to run straight down, possible causes are a porous block, oil gallery cup plug, bedplate to cylinder block mating surfaces and seal bore. See proper repair procedures for these items.

(4) If no leaks are detected, pressurize the crankcase as previously described.

CAUTION: Do not exceed 20.6 kPa (3 psi).

(5) If the leak is not detected, very slowly turn the crankshaft and watch for leakage. If a leak is detected between the crankshaft and seal while slowly turning the crankshaft, it is possible the crankshaft seal surface is damaged. The seal area on the crankshaft could have minor nicks or scratches that can be polished out with emery cloth.

CAUTION: Use extreme caution when crankshaft polishing is necessary to remove minor nicks and scratches. The crankshaft seal flange is especially machined to complement the function of the rear oil seal.

(6) For bubbles that remain steady with shaft rotation, no further inspection can be done until disassembled.

(7) After the oil leak root cause and appropriate corrective action have been identified, replace component(s) as necessary.

STANDARD PROCEDURE

STANDARD PROCEDURE - REPAIR OF DAMAGED OR WORN THREADS

Damaged or worn threads (excluding spark plug and camshaft bearing cap attaching threads) can be repaired. Essentially, this repair consists of drilling out worn or damaged threads, tapping the hole with a special Heli-Coil Tap, (or equivalent) and installing an insert into the tapped hole. This brings the hole back to its original thread size.

CAUTION: Be sure that the tapped holes maintain the original center line.

Heli-Coil tools and inserts are readily available from automotive parts jobbers.

STANDARD PROCEDURE - HYDROSTATIC LOCKED ENGINE

When an engine is suspected to be hydrostatically locked, regardless of what caused the problem, the following steps should be used.

ENGINE 2.0L DOHC (Continued)

CAUTION: DO NOT use starter motor to rotate the engine, severe damage may occur.

(1) Inspect air cleaner, induction system and intake manifold to insure system is dry and clear of foreign material.
(2) Remove negative battery cable.
(3) Place a shop towel around the spark plugs when removing them from the engine. This will catch any fluid that may possibly be in the cylinder under pressure.
(4) With all spark plugs removed, rotate engine crankshaft using a breaker bar and socket.
(5) Identify the fluid in the cylinder(s) (i.e., coolant, fuel, oil or other).
(6) Make sure all fluid has been removed from the cylinders. Inspect engine for damage (i.e., connecting rods, pistons, valves, etc.)
(7) Repair engine or components as necessary to prevent this problem from re-occurring.

CAUTION: Squirt approximately one teaspoon of oil into the cylinders, rotate engine to lubricate the cylinder walls to prevent damage on restart.

(8) Install new spark plugs.
(9) Drain engine oil and remove oil filter.
(10) Install a new oil filter.
(11) Fill engine with specified amount of approved oil.
(12) Connect negative battery cable.
(13) Start engine and check for any leaks.

STANDARD PROCEDURE - FORM-IN-PLACE GASKETS AND SEALERS

There are numerous places where form-in-place gaskets are used on the engine. Care must be taken when applying form-in-place gaskets to assure obtaining the desired results. **Do not use form-in-place gasket material unless specified.** Bead size, continuity, and location are of great importance. Too thin a bead can result in leakage while too much can result in spill-over which can break off and obstruct fluid feed lines. A continuous bead of the proper width is essential to obtain a leak-free gasket.

There are numerous types of form-in-place gasket materials that are used in the engine area. Mopar® Engine RTV GEN II, Mopar® ATF-RTV, and Mopar® Gasket Maker gasket materials, each have different properties and can not be used in place of the other.

MOPAR® ENGINE RTV GEN II is used to seal components exposed to engine oil. This material is a specially designed black silicone rubber RTV that retains adhesion and sealing properties when exposed to engine oil. Moisture in the air causes the material to cure. This material is available in three ounce tubes and has a shelf life of one year. After one year this material will not properly cure. Always inspect the package for the expiration date before use.

MOPAR® ATF RTV is a specifically designed black silicone rubber RTV that retains adhesion and sealing properties to seal components exposed to automatic transmission fluid, engine coolants, and moisture. This material is available in three ounce tubes and has a shelf life of one year. After one year this material will not properly cure. Always inspect the package for the expiration date before use.

MOPAR® GASKET MAKER is an anaerobic type gasket material. The material cures in the absence of air when squeezed between two metallic surfaces. It will not cure if left in the uncovered tube. The anaerobic material is for use between two machined surfaces. Do not use on flexible metal flanges.

MOPAR® BED PLATE SEALANT is a unique (green-in-color) anaerobic type gasket material that is specially made to seal the area between the bedplate and cylinder block without disturbing the bearing clearance or alignment of these components. The material cures slowly in the absence of air when torqued between two metallic surfaces, and will rapidly cure when heat is applied.

MOPAR® GASKET SEALANT is a slow drying, permanently soft sealer. This material is recommended for sealing threaded fittings and gaskets against leakage of oil and coolant. Can be used on threaded and machined parts under all temperatures. This material is used on engines with multilayer steel (MLS) cylinder head gaskets. This material also will prevent corrosion. Mopar® Gasket Sealant is available in a 13 oz. aerosol can or 4oz./16 oz. can w/applicator.

SEALER APPLICATION

Mopar® Gasket Maker material should be applied sparingly 1 mm (0.040 in.) diameter or less of sealant to one gasket surface. Be certain the material surrounds each mounting hole. Excess material can easily be wiped off. Components should be torqued in place within 15 minutes. The use of a locating dowel is recommended during assembly to prevent smearing material off the location.

Mopar® Engine RTV GEN II or ATF RTV gasket material should be applied in a continuous bead approximately 3 mm (0.120 in.) in diameter. All mounting holes must be circled. For corner sealing, a 3.17 or 6.35 mm (1/8 or 1/4 in.) drop is placed in the center of the gasket contact area. Uncured sealant may be removed with a shop towel. Components should be torqued in place while the sealant is still wet to the touch (within 10 minutes). The usage of a locating dowel is recommended during assembly to prevent smearing material off the location.

ENGINE 2.0L DOHC (Continued)

Mopar® Gasket Sealant in an aerosol can should be applied using a thin, even coat sprayed completely over both surfaces to be joined, and both sides of a gasket. Then proceed with assembly. Material in a can w/applicator can be brushed on evenly over the sealing surfaces. Material in an aerosol can should be used on engines with multi-layer steel gaskets.

STANDARD PROCEDURE - ENGINE GASKET SURFACE PREPARATION

To ensure engine gasket sealing, proper surface preparation must be performed, especially with the use of aluminum engine components and multi-layer steel cylinder head gaskets.

Never use the following to clean gasket surfaces:

- Metal scraper
- Abrasive pad or paper to clean cylinder block and head
- High speed power tool with an abrasive pad or a wire brush (Fig. 3)

NOTE: Multi-Layer Steel (MLS) head gaskets require a scratch free sealing surface.

Only use the following for cleaning gasket surfaces:

- Solvent or a commercially available gasket remover
- Plastic or wood scraper (Fig. 3)
- Drill motor with 3M Roloc™ Bristle Disc (white or yellow) (Fig. 3)

CAUTION: Excessive pressure or high RPM (beyond the recommended speed), can damage the sealing surfaces. The mild (white, 120 grit) bristle disc is recommended. If necessary, the medium (yellow, 80 grit) bristle disc may be used on cast iron surfaces with care.

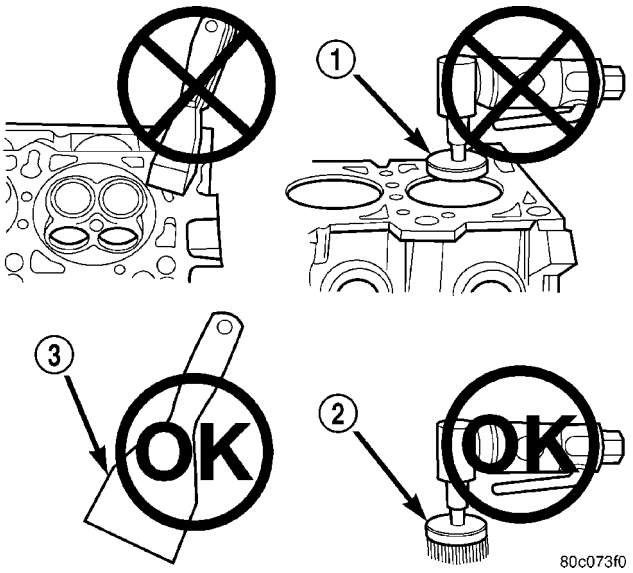

Fig. 3 Proper Tool Usage For Surface Preparation

1 - ABRASIVE PAD
2 - 3M ROLOC™ BRISTLE DISC
3 - PLASTIC/WOOD SCRAPER

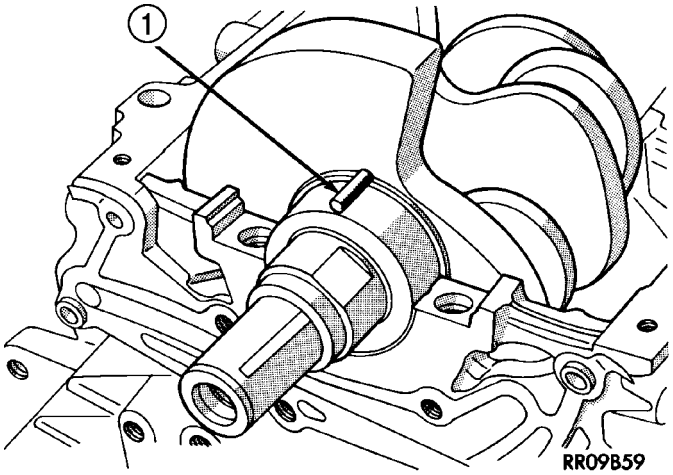

Fig. 4 Plastigage Placed in Lower Shell—Typical

1 - PLASTIGAGE

STANDARD PROCEDURE - MEASURING BEARING CLEARANCE USING PLASTIGAGE

Engine crankshaft bearing clearances can be determined by use of Plastigage or equivalent. The following is the recommended procedure for the use of Plastigage:

(1) Remove oil film from surface to be checked. Plastigage is soluble in oil.

(2) Place a piece of Plastigage across the entire width of the bearing shell in the cap approximately 6.35 mm (1/4 in.) off center and away from the oil holes (Fig. 4). (In addition, suspected areas can be checked by placing the Plastigage in the suspected area). Torque the bearing cap bolts of the bearing being checked to the proper specifications.

(3) Remove the bearing cap and compare the width of the flattened Plastigage with the metric scale provided on the package. Locate the band closest to the same width. This band shows the amount of clearance in thousandths of a millimeter. Differences in readings between the ends indicate the amount of taper present. Record all readings taken. Compare clearance measurements to specs found in engine specifications (Refer to 9 - ENGINE - SPECIFICATIONS). **Plastigage generally is accompanied by two scales. One scale is in inches, the other is a metric scale.**

NOTE: Plastigage is available in a variety of clearance ranges. Use the most appropriate range for the specifications you are checking.

ENGINE 2.0L DOHC (Continued)

(4) Install the proper crankshaft bearings to achieve the specified bearing clearances.

STANDARD PROCEDURE - ENGINE CORE AND OIL GALLERY PLUGS

Using a blunt tool such as a drift and a hammer, strike the bottom edge of the cup plug. With the cup plug rotated, grasp firmly with pliers or other suitable tool and remove plug (Fig. 5).

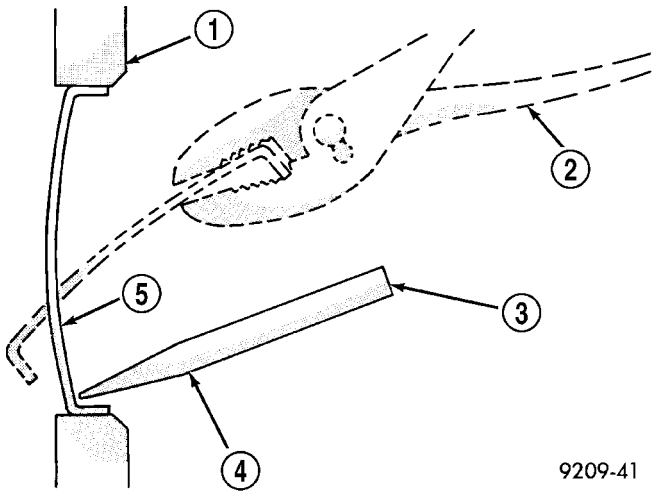

Fig. 5 Core Hole Plug Removal

1 - CYLINDER BLOCK
2 - REMOVE PLUG WITH PLIERS
3 - STRIKE HERE WITH HAMMER
4 - DRIFT PUNCH
5 - CUP PLUG

CAUTION: Do not drive cup plug into the casting as restricted cooling can result and cause serious engine problems.

Thoroughly clean inside of cup plug hole in cylinder block or head. Be sure to remove old sealer. Lightly coat inside of cup plug hole with Mopar® Stud and Bearing Mount. Make certain the new plug is cleaned of all oil or grease. Using proper drive plug, drive plug into hole so that the sharp edge of the plug is at least 0.5 mm (0.020 in.) inside the lead-in chamfer.

It is not necessary to wait for curing of the sealant. The cooling system can be refilled and the vehicle placed in service immediately.

REMOVAL - ENGINE ASSEMBLY

(1) Perform fuel pressure release procedure (Refer to 14 - FUEL SYSTEM/FUEL DELIVERY - STANDARD PROCEDURE).

(2) Disconnect negative battery cable.

(3) Drain cooling system (Refer to 7 - COOLING/ENGINE - STANDARD PROCEDURE).

(4) Discharge A/C system using a suitable refrigerant recovery machine.

(5) Remove throttle body air inlet hose and air cleaner housing assembly.

(6) Remove upper radiator crossmember.

(7) Disconnect upper and lower radiator hoses at radiator.

(8) Manual Transmission equipped vehicles:

- Disconnect speed sensor connector.
- Disconnect back up lamp switch connector.
- Disconnect transmission shift cables.
- Disconnect clutch cable.

(9) Automatic Transmission equipped vehicles:

- Disconnect transmission shift cable.
- Disconnect transmission electrical harness connectors (C104 & C105) (Refer to 8 - ELECTRICAL/CONNECTOR/GROUND LOCATIONS - DESCRIPTION).
- Using a blade or suitable hose cutter, cut transaxle oil cooler lines off flush with fittings. Plug lines and fittings to prevent debris from entering transaxle or cooler circuit. A service splice kit will be installed upon reassembly.

(10) Disconnect A/C lines at condenser. Remove cooling module assembly (radiator, fan module, and condenser).

(11) Disconnect engine electrical harness from PCM and bulkhead connectors.

(12) Raise vehicle on hoist.

(13) Remove both front wheels.

(14) Remove left and right splash shields.

(15) Remove both axle shafts (Refer to 3 - DIFFERENTIAL & DRIVELINE/HALF SHAFT - REMOVAL).

(16) Drain engine oil.

(17) Remove accessory drive belts (Refer to 7 - COOLING/ACCESSORY DRIVE/DRIVE BELTS - REMOVAL).

(18) Remove power steering pump from bracket. **Do not** disconnect power steering lines from pump. Reposition pump and support with suitable retaining strap.

(19) Disconnect heater return hose from pipe connection at right front frame rail area.

(20) Disconnect A/C compressor electrical connectors.

(21) Disconnect exhaust pipe from manifold.

(22) Remove through bolts from front and rear engine mounts.

(23) Remove rear mount bracket from transmission.

(24) Remove structural collar and torque reaction bracket (Refer to 9 - ENGINE/ENGINE BLOCK/STRUCTURAL COVER - REMOVAL).

(25) Remove transmission dust shield.

(26) Automatic Transmission equipped vehicles:

ENGINE 2.0L DOHC (Continued)

• Mark flex plate to torque converter position. Remove torque converter bolts.

(27) Lower vehicle.

(28) Disconnect positive cable from battery and PDC.

(29) Disconnect ground cable from left side transaxle mount bracket.

(30) Disconnect throttle and speed control cables.

(31) Disconnect coolant recovery container overflow hose.

(32) Disconnect heater hose at thermostat housing.

(33) Disconnect all ground straps attaching to engine.

(34) Disconnect brake booster and vapor purge vacuum hoses.

(35) Disconnect fuel line from fuel rail.

(36) Disconnect generator connectors.

(37) Remove intake manifold (Refer to 9 - ENGINE/MANIFOLDS/INTAKE MANIFOLD - REMOVAL).

(38) Remove generator.

(39) Remove A/C suction line at compressor. Cap suction port and line.

(40) Remove A/C compressor.

(41) Raise vehicle enough to allow engine dolly 6135 and cradle 6710 with posts 6848 to be installed under vehicle (Fig. 6).

(42) Loosen cradle engine mounts to allow movement for positioning onto engine locating holes on the engine bedplate, compressor and support bracket. Install adapters 6909 to the two post at rear of engine. Lower vehicle and position cradle mounts until the engine is resting on posts. Tighten post mounts to cradle frame. This will keep mounts from moving when removing or installing engine/transmission assembly. Secure engine/transmission to dolly/cradle with safety straps.

(43) Lower vehicle so weight of the engine and transmission ONLY is on the cradle.

(44) Remove right and left side vertical engine mount bolts.

(45) Slowly raise vehicle in short length spans. Inspect at each interval for potential engine or transaxle contact to vehicle components. Move the cradle/dolly fixture as necessary to allow for removal clearance.

ENGINE 2.0L DOHC (Continued)

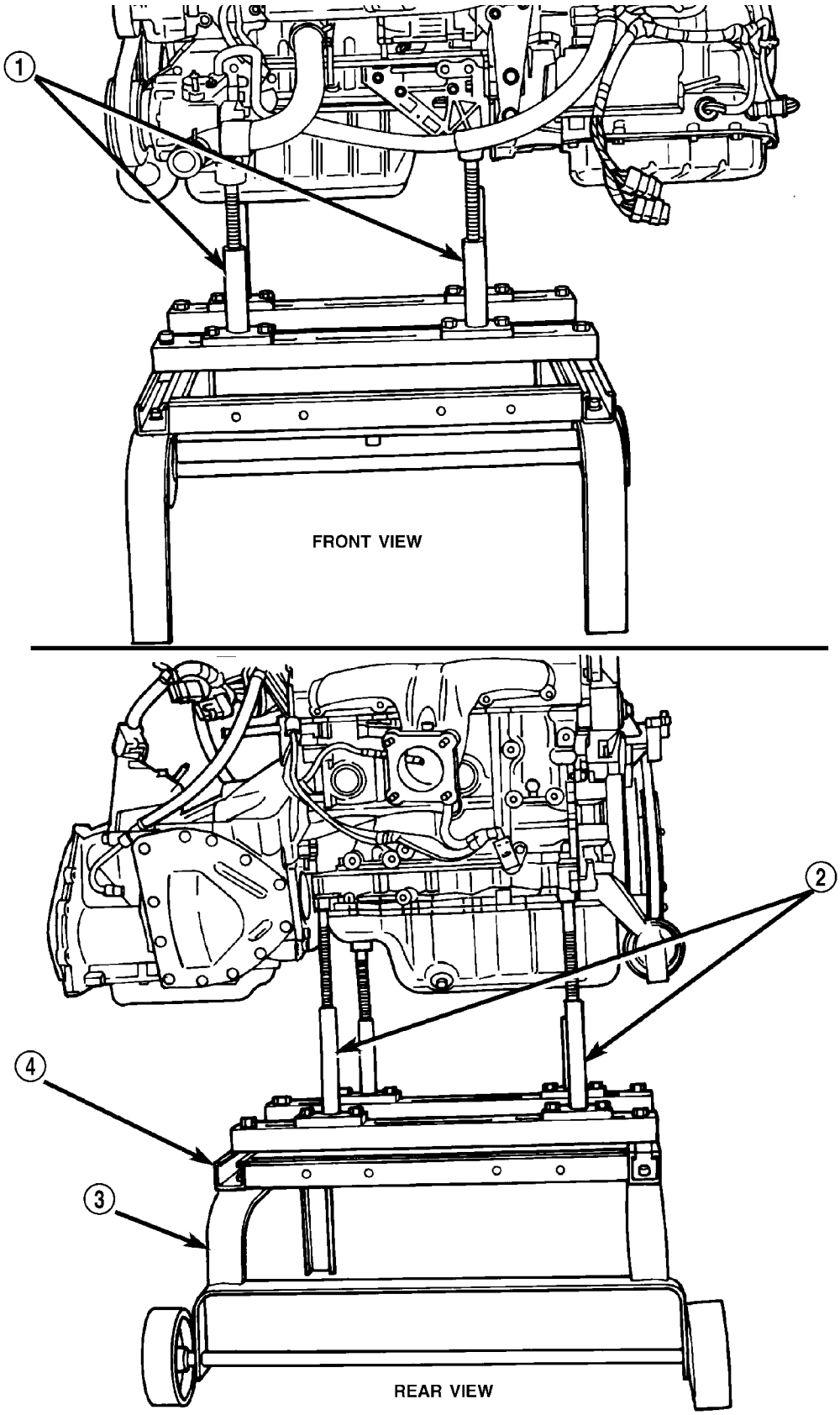

Fig. 6 Positioning Engine Cradle Support Post Mounts

1 - SPECIAL TOOLS POST 6848
2 - SPECIAL TOOLS POST 6848 WITH ADAPTERS 6909
3 - SPECIAL TOOL 6135 DOLLY
4 - SPECIAL TOOL 6710 CRADLE

ENGINE 2.0L DOHC (Continued)

INSTALLATION - ENGINE ASSEMBLY

(1) Position engine/transaxle assembly under vehicle and slowly lower vehicle in short length spans. Inspect at each interval for potential engine or transaxle contact to vehicle components. Move the cradle/dolly fixture as necessary to allow for installation clearance.

(2) Continue lowering vehicle until right side engine mount and left side transaxle mount align to their mounting locations. Install mounting bolts and torque to 61 N·m (45 ft. lbs.).

(3) Remove safety straps from engine/transaxle assembly. Slowly raise vehicle enough to remove the engine dolly and cradle.

(4) Install A/C compressor.

(5) Connect A/C suction line to compressor.

(6) Install generator.

(7) Install intake manifold. Torque fasteners to 12 N·m (105 in. lbs.) (Refer to 9 - ENGINE/MANIFOLDS/INTAKE MANIFOLD - INSTALLATION).

(8) Connect generator connectors.

(9) Connect fuel line to fuel rail.

(10) Connect brake booster and vapor purge hoses.

(11) Connect all ground straps to engine.

(12) Connect heater hose to thermostat housing.

(13) Connect coolant recovery container overflow hose.

(14) Connect throttle and speed control cables.

(15) Connect ground cable to left side transaxle mount bracket.

(16) Connect positive cable to battery and PDC.

(17) Raise vehicle on hoist.

(18) Automatic Transmission equipped vehicles:

- Install torque converter bolts.

(19) Install transmission dust shield.

(20) Install structural collar and torque reaction bracket (Refer to 9 - ENGINE/ENGINE BLOCK/STRUCTURAL COVER - INSTALLATION).

(21) Install rear mount bracket to transmission.

(22) Install front and rear engine mount through bolts. Torque fasteners to 61 N·m (45 ft. lbs.).

(23) Connect exhaust pipe to exhaust manifold. Torque fasteners to 28 N·m (250 in. lbs.).

(24) Connect A/C compressor electrical connectors.

(25) Connect heater return hose to pipe connection at right front frame rail area.

(26) Install power steering pump to bracket.

(27) Install accessory drive belts (Refer to 7 - COOLING/ACCESSORY DRIVE/DRIVE BELTS - INSTALLATION).

(28) Install both axle shafts (Refer to 3 - DIFFERENTIAL & DRIVELINE/HALF SHAFT - INSTALLATION).

(29) Install new oil filter.

(30) Install left and right splash shields.

(31) Install both front wheels.

(32) Lower vehicle.

(33) Connect engine electrical harness to PCM and bulkhead connectors.

(34) Install cooling module assembly (radiator, fan module, and condenser). Connect A/C lines to condenser.

(35) Manual Transmission equipped vehicles:

- Connect clutch cable.
- Connect transmission shift cables.
- Connect back up lamp switch connector.
- Connect speed sensor connector.

(36) Automatic Transmission equipped vehicles:

- Connect transmission shift cable.
- Connect transmission electrical connectors (C104 & C105) (Refer to 8 - ELECTRICAL/CONNECTOR/GROUND LOCATIONS - DESCRIPTION).
- Connect transmission oil cooler lines using service splice kit. Refer to instructions provided with kit.

(37) Connect upper and lower radiator hoses.

(38) Install upper radiator crossmember.

(39) Install throttle body air inlet hose and air cleaner housing assembly.

(40) Fill engine crankcase with proper oil to correct level.

(41) Evacuate and recharge A/C system (Refer to 24 - HEATING & AIR CONDITIONING - STANDARD PROCEDURE).

(42) Fill cooling system (Refer to 7 - COOLING/ENGINE - STANDARD PROCEDURE).

(43) Connect negative battery cable.

(44) Start engine and run until normal operating temperature is reached.

ENGINE 2.0L DOHC (Continued)

SPECIFICATIONS

2.0L DOHC ENGINE

DESCRIPTION	SPECIFICATION
General Specification	
Type	In-Line OHV, DOHC
Number of Cylinders	4
Displacement	2.0 Liters (122 cu. in.)
Bore	87.5 mm (3.445 in.)
Stroke	83.0 mm (3.268 in.)
Compression Ratio	9.6:1
Firing Order	1-3-4-2
Compression Pressure	1172–1551 kPa (170–225 psi)
Max. Variation Between Cylinders	25%
Cylinder Block	
Cylinder Bore Diameter	87.4924–87.5076 mm (3.4446–3.4452 in.)
Out-of-Round (Max.)	0.051 mm (0.002 in.)
Taper (Max.)	0.051 mm (0.002 in.)
Pistons	
Piston Diameter	87.463–87.481 mm (3.4434–3.4441 in.)
Clearance @ 17.5 mm (11/16 in.) from bottom of skirt	0.018–0.050 mm (0.0007–0.0020 in.)
Weight	340–350 grams (11.99–12.34 oz.)
Land Clearance (Diametrical)	0.740–0.803 mm (0.029–0.031 in.)
Piston Length	64.8 mm (2.551 in.)
Piston Ring Groove Depth No. 1	3.983–4.132 mm (0.157–0.163 in.)
Piston Ring Groove Depth No. 2	4.456–4.605 mm (0.175–0.181 in.)
Piston Ring Groove Depth No. 3	3.841–4.075 mm (0.151–0.160 in.)
Piston Pins	
Clearance in Piston	0.008–0.020 mm (0.0003–0.0008 in.)
Clearance in Connecting Rod	Interference
Diameter	20.998–21.003 mm (0.8267–0.8269 in.)
End Play	None
Length	74.75–75.25 mm (2.943–2.963 in.)
Piston Rings	
Ring Gap—Top Compression Ring	0.23–0.52 mm (0.009–0.020 in.)
Wear Limit	0.8 mm (0.031 in.)
Ring Gap—2nd Compression Ring	0.49–0.78 mm (0.019–0.031 in.)
Wear Limit	0.8 mm (0.031 in.)
Ring Gap—Oil Control Steel Rails	0.23–0.66 mm (0.009–0.026 in.)
Wear Limit	1.0 mm (0.039 in.)
Ring Side Clearance—Compression Rings	0.025–0.065 mm (0.0010–0.0026 in.)
Wear Limit	0.10 mm (0.004 in.)
Ring Side Clearance—Oil Ring Pack	0.004–0.178 mm (0.0002–0.0070 in.)
Ring Width—Compression Rings	1.17–1.19 mm (0.046–0.047 in.)
Ring Width—Oil Ring Pack	2.854–3.008 mm (0.1124–0.1184 in.)
Connecting Rod	
Bearing Clearance	0.026–0.059 mm (0.001–0.0023 in.)
Wear Limit	0.075 mm (0.003 in.)
Bore Diameter—Piston Pin	20.96–20.98 mm (0.8252–0.8260 in.)

ENGINE 2.0L DOHC (Continued)

DESCRIPTION	SPECIFICATION
Bore Diameter—Crankshaft End	50.991–51.005 mm (2.0075–2.0081 in.)
Side Clearance	0.13–0.38 mm (0.005–0.015 in.)
Wear Limit	0.40 mm (0.016 in.)
Weight—Total (Less Bearing)	548.8 grams (19.36 oz.)
Crankshaft	
Connecting Rod Journal Diameter	47.9924–48.0076 mm (1.8894–1.8900 in.)
Main Bearing Journal Diameter	51.9924–52.0076 mm (2.0469–2.0475 in.)
Journal Out-of-Round (Max.)	0.0035 mm (0.0001 in.)
Journal Taper (Max.)	0.0038 mm (0.0001 in.)
End Play	0.09–0.27 mm (0.0035–0.0106 in.)
Wear Limit	0.37 mm (0.015 in.)
Main Bearing Diametrical Clearance	0.022–0.062 mm (0.0008–0.0024 in.)
Hydraulic Lash Adjuster	
Body Diameter	15.901–15.913 mm (0.626–0.6264 in.)
Plunger Travel Minimum (Dry)	3.0 mm (0.118 in.)
Cylinder Head Camshaft Bearing Bore Diameter	
Journals No.1–6	26.020–26.041 mm (1.024–1.025 in.)
Camshaft	
Journal Diameter No. 1–6	25.951–25.970 mm (1.021–1.022 in.)
Bearing Clearance—Diametrical	0.069–0.071 mm (0.0027–0.003 in.)
End Play	0.05–0.15 mm (0.002–0.006 in.)
Lift (Zero Lash)	
Intake	8.65 mm (0.340 in.)

DESCRIPTION	SPECIFICATION
Exhaust	7.95 mm (0.312 in.)
Intake Valve Timing*	
Closes (ABDC)	33.6°
Opens (BTDC)	3.8°
Duration	212.8°
Exhaust Valve Timing*	
Closes (BTDC)	1°
Opens (BBDC)	41.8°
Duration	220.8°
Valve Overlap	0°
*All readings in crankshaft degrees, at 0.5 mm (0.019 in.) of valve lift.	
Cylinder Head	
Material	Cast Aluminum
Gasket Thickness (Compressed)	0.71 mm (0.028 in.)
Valve Seat	
Angle	44.5°- 45°
Seat Diameter—Intake	34.37 - 34.63mm (1.353 - 1.363in.)
Seat Diameter—Exhaust	27.06 - 27.32mm (1.065 - 1.075in.)
Runout (Max.)	0.05 mm (0.002 in.)
Valve Seat Width—Intake and Exhaust	0.9–1.3 mm (0.035–0.051 in.)
Service Limit—Intake	2.0 mm (0.079 in.)
Service Limit—Exhaust	2.5 mm (0.098 in.)
Valve Guide	
Diameter I.D.	5.975–6.000 mm (0.235–0.236 in.)
Guide Bore Diameter	11.0–11.02 mm (0.4330–0.4338 in.)
Guide Height (spring seat to guide tip)	13.25–13.75 mm (0.521–0.541 in.)

ENGINE 2.0L DOHC (Continued)

DESCRIPTION	SPECIFICATION
Valves	
Face Angle—Intake and Exhaust	44.5—45°
Head Diameter—Intake	34.67–34.93 mm 1.364–1.375 in.)
Head Diameter—Exhaust	28.32–28.52 mm (1.114–1.122 in.)
Valve Length (Overall) —Intake —Exhaust	 112.76–113.32 mm (4.439–4.461 in.) 110.89–111.69 mm (4.365–4.397 in.)
Valve Stem Diameter —Intake —Exhaust	 5.934–5.952 mm (0.2337–0.2344 in.) 5.906–5.924 mm (0.2326–0.2333 in.)
Valve Margin	
Intake	1.200–1.700 mm (0.047–0.066
Service Limit	0.95 mm (1/32 in.)
Exhaust	0.985–1.315 mm (0.038–0.051 in.)
Service Limit	1.05 mm (3/64 in.)
Valve Stem Tip Height	
Intake	48.04 mm (1.891 in.)
Exhaust	47.99 mm (1.889 in.)
Valve Stem to Guide Clearance	
Intake	0.048–0.066 mm (0.0018–0.0025 in.)
Max. Allowable	0.076 mm (0.003 in.)
Exhaust	0.0736–0.094 mm (0.0029–0.0037 in.)
Max. Allowable	0.101 mm (0.004 in.)

DESCRIPTION	SPECIFICATION
Valve Springs	
Free Length (Approx.)	49.3 mm (1.940 in.)
Nominal Force (Valve Closed)	245–328 N @ 38.0 mm (66–74 lbs. @ 1.496 in.)
Nominal Force (Valve Open)	565–627 N @ 29.3 mm (127–141 lbs. @ 1.53 in.)
Installed Height	36.93 - 38.93mm (1.453 - 1.532in.)
Number of Coils	7.80
Wire Diameter	3.61 mm (0.142 in.)
Oil Pump	
Clearance Over Rotors (Max.)	0.10 mm (0.004 in.)
Cover Out-of-Flat (Max.)	0.076 mm (0.003 in.)
Inner Rotor Thickness (Min.)	7.64 mm (0.301 in.)
Outer Rotor Thickness (Min.)	7.64 mm (0.301 in.)
Outer Rotor Clearance (Max.)	0.039 mm (0.015 in.)
Outer Rotor Diameter (Min.)	79.95 mm (3.148 in.)
Tip Clearance Between Rotors (Max.)	0.20 mm (0.008 in.)
Oil Pressure	
At Curb Idle Speed*	25 kPa (4 psi)
At 3000 rpm	170–550 kPa (25–80 psi)
CAUTION: *If pressure is ZERO at curb idle, DO NOT run engine at 3000 rpm.	

ENGINE 2.0L DOHC (Continued)

TORQUE

DESCRIPTION	N·m	Ft. Lbs.	In. Lbs.
Camshaft Sprocket—Bolt	115	85	—
Connecting Rod Cap—Bolts	27 +¼ turn	20 +¼ turn	—
Crankshaft Main Bearing Cap/Bedplate			
—M8 Bolts	34	25	—
—M11 Bolts	81	60	—
Crankshaft Damper	136	100	—
Cylinder Head—Bolts	Refer to Procedure		
Cylinder Head Cover—Bolts	12	—	105
Drive Plate to Crankshaft	95	70	—
Engine Mount Bracket Right—Bolts	61	45	—
Engine Mount Front and Rear—Through Bolt	61	45	—
Exhaust Manifold to Cylinder Head—Bolts	23	—	200
Exhaust Manifold Heat Shield—Bolts	12	—	105
Intake Manifold—Bolts	28	—	250
Oil Filter	11	8	—
Oil Filter Adaptor	80	60	—
Oil Pan—Bolts	12	—	105
Oil Pan Drain—Plug	28	20	—
Oil Pump to Block—Bolts	28	20	—
Oil Pump Cover Plate—Bolts	12	—	105
Oil Pump Pick-up Tube—Bolt	23	—	200
Oil Pump Relief Valve—Cap	42	30	—
PCV Valve—Screw	8	—	70
Spark Plugs	18	13	—
Timing Belt Covers			
—Front Cover Bolts	12	—	105
—Rear Cover Bolts	12	—	105
Timing Belt Tensioner Bracket —Mounting Bolts	31	23	—
Timing Belt Tensioner Lock Nut	30	22	—
Water Pump—Bolts	12	—	105

SPECIAL TOOLS

2.0L DOHC ENGINE

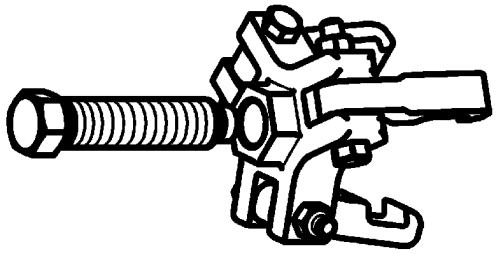

Puller 8454

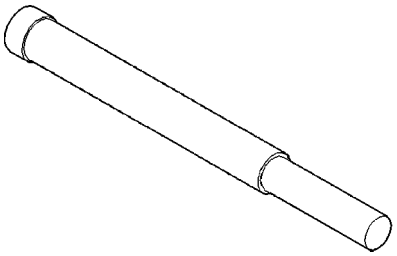

Crankshaft Damper Removal Insert 6827-A

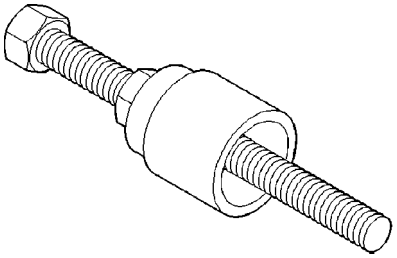

Crankshaft Damper/Sprocket Installer 6792

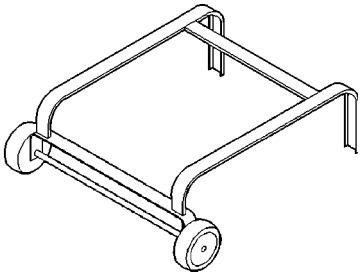

Dolly 6135

ENGINE 2.0L DOHC (Continued)

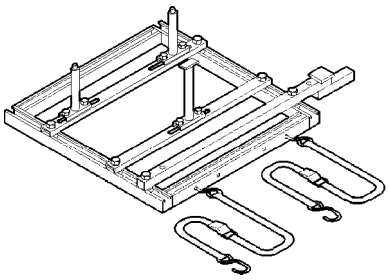

Cradle 6710

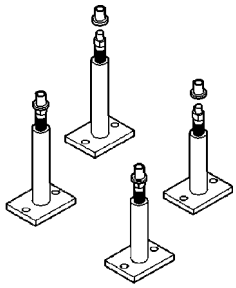

Post Kit Engine Cradle 6848

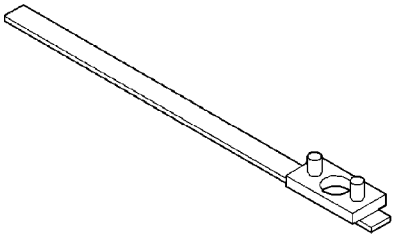

Camshaft Sprocket Remover/Installer C-4687

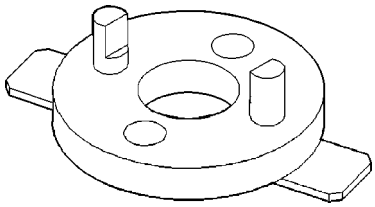

Camshaft Sprocket Remover/Installer Adapter C-4687-1

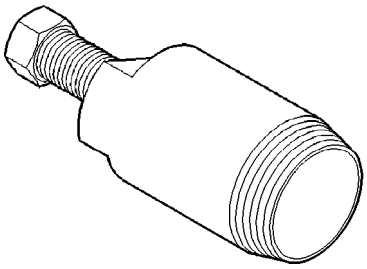

Camshaft Seal Remover C-4679A

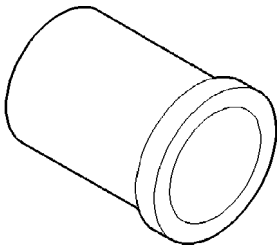

Camshaft Seal Installer MD-998306

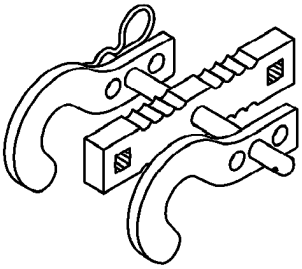

Valve Spring Compressor 8215-A

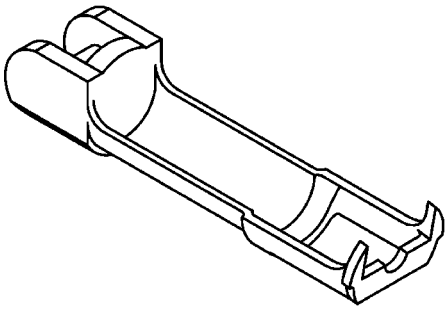

Adaptor 8436

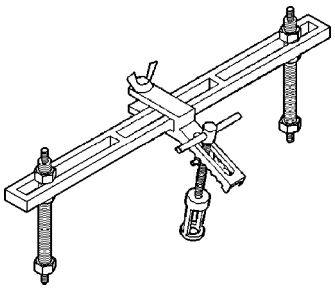

Valve Spring Compressor MD-998772-A

ENGINE 2.0L DOHC (Continued)

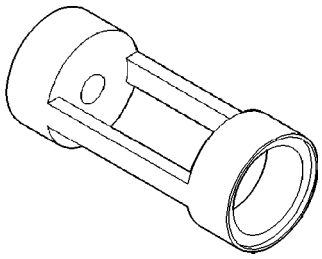

Valve Spring Compressor Adapter 6779

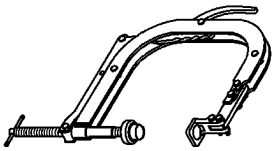

Valve Spring Compressor C-3422-D

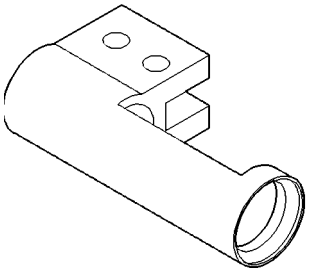

Spring Compressor Adaptor 6526

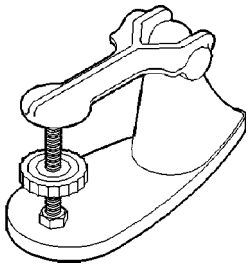

Valve Spring Tester C-647

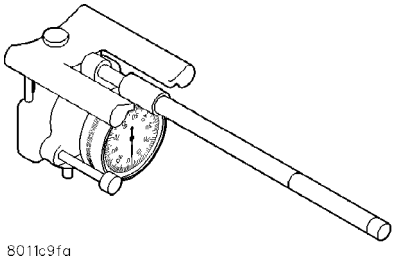

Cylinder Bore Gage C-119

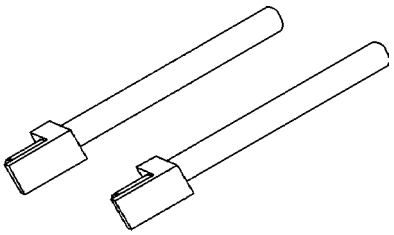

Connecting Rod Guides 8189

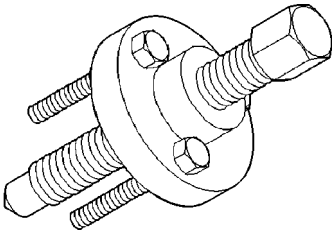

Crankshaft Sprocket Remover 6793

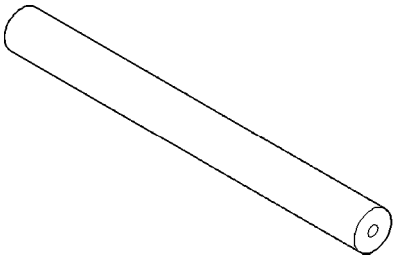

Crankshaft Sprocket Remover Insert C-4685-C2

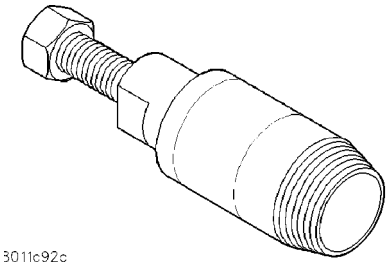

Crankshaft Seal Remover 6771

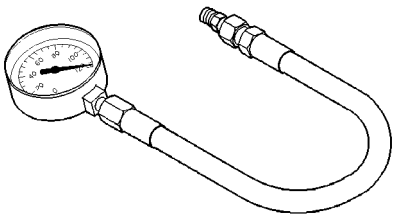

Oil Pressure Gage C-3292

ENGINE 2.0L DOHC (Continued)

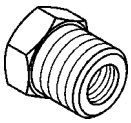

Adaptor 8406

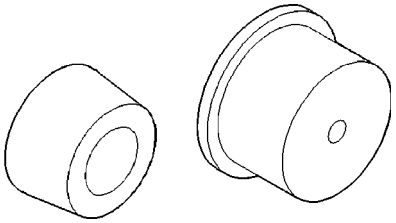

Rear Crankshaft Seal Guide and Installer 6926-1 and 6926-2

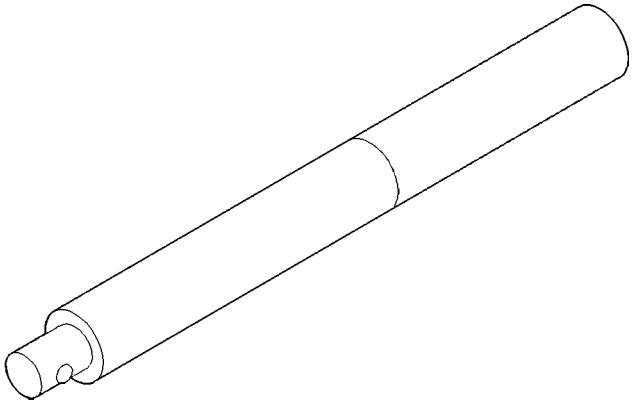

Driver Handle C-4171

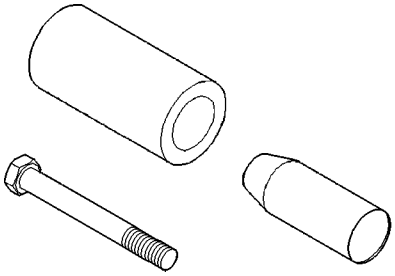

Front Crankshaft Oil Seal Installer 6780

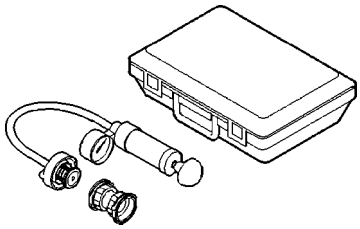

Cooling System Tester 7700

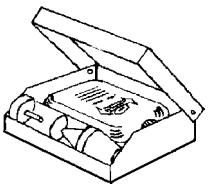

Combustion Leak Tester C-3685-A

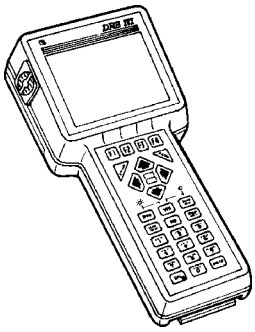

DRB III® with PEP Module OT-CH6010A

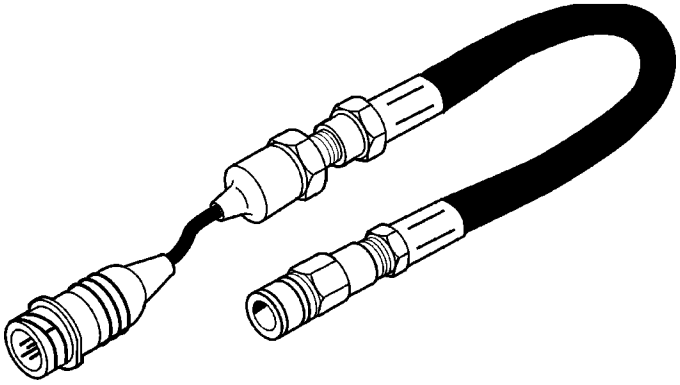

Pressure Transducer CH7059

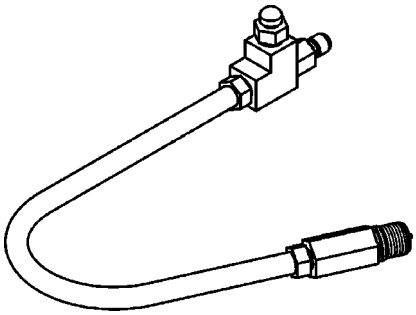

Cylinder Compression Pressure Adaptor 8116

AIR CLEANER ELEMENT

REMOVAL

(1) Disconnect negative battery cable.

(2) Disconnect inlet air temperature sensor electrical connector.

(3) Disconnect fresh air makeup hose from throttle body air inlet hose.

(4) Disconnect PCV hose from intake manifold.

(5) Loosen hose clamp at throttle body air inlet hose. Remove hose from throttle body.

(6) Push in on locking tabs to disengage air inlet hose from air cleaner housing. Remove throttle body air inlet hose and air cleaner element together.

(7) Separate air cleaner element from throttle body air inlet hose.

INSTALLATION

(1) Clean any debris from inside air cleaner housing.

(2) Install air cleaner element onto throttle body air inlet hose.

(3) Install throttle body air inlet hose into air cleaner housing. Push in on hose until an audible “click” is heard from locking tabs.

(4) Install hose on throttle body. Tighten hose clamp.

(5) Connect PCV hose to intake manifold.

(6) Connect fresh air makeup hose.

(7) Connect inlet air temperature sensor electrical connector.

(8) Connect negative battery cable.

AIR CLEANER HOUSING

REMOVAL

(1) Disconnect negative battery cable.

(2) Disconnect inlet air temperature sensor electrical connector.

(3) Disconnect fresh air makeup hose from throttle body air inlet hose.

(4) Loosen hose clamp at throttle body air inlet hose. Remove hose from throttle body (Fig. 7).

(5) Remove push pin securing air duct to upper radiator support.

(6) Remove nut on bracket that holds air cleaner housing.

(7) Pull air cleaner housing straight up off locating pins (Fig. 7).

INSTALLATION

(1) Install air cleaner housing straight down on locating pins (Fig. 7).

(2) Install nut on bracket that holds air cleaner housing and tighten.

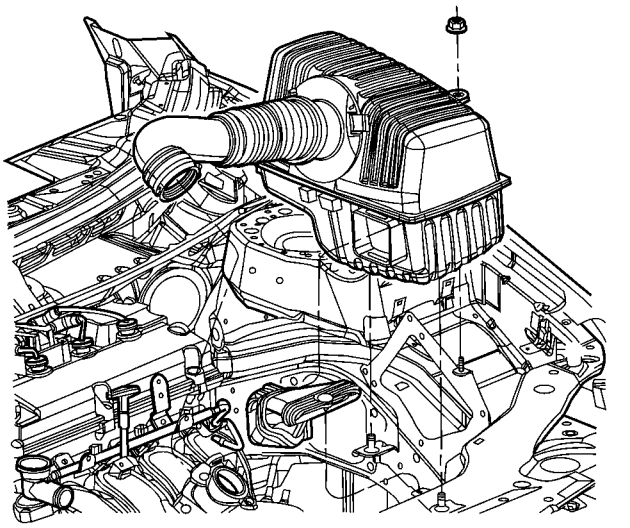

Fig. 7 Air Cleaner Housing

(3) Install push pin that secures air duct to upper radiator support.

(4) Install throttle body air inlet hose to throttle body. Tighten hose clamp.

(5) Connect fresh air makeup hose.

(6) Connect inlet air temperature sensor electrical connector.

(7) Connect negative battery cable.

CYLINDER HEAD

DESCRIPTION

The cross flow designed, aluminum cylinder head contains dual over-head camshafts with four valves per cylinder (Fig. 8). The valves are arrange in two in-line banks. The intake valves face toward the front of the vehicle. The exhaust valves face the dash panel. The cylinder head incorporates powdered metal valve guides and seats. The cylinder head is sealed to the block using a multi-layer steel head gasket and retaining bolts.

Integral oil galleries providing lubrication passages to the hydraulic lash adjusters, camshafts, and valve mechanisms.

DIAGNOSIS AND TESTING—CYLINDER HEAD GASKET

A cylinder head gasket leak can be located between adjacent cylinders or between a cylinder and the adjacent water jacket.

Possible indications of the cylinder head gasket leaking between adjacent cylinders are:

- Loss of engine power
- Engine misfiring
- Poor fuel economy

CYLINDER HEAD (Continued)

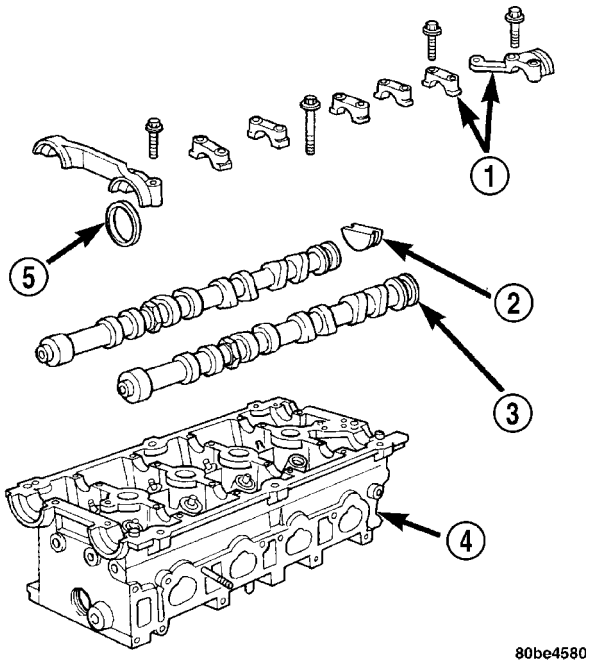

Fig. 8 Cylinder Head and Camshafts

1 - CAMSHAFT BEARING CAPS
2 - PLUG
3 - CAMSHAFT
4 - CYLINDER HEAD
5 - CAMSHAFT OIL SEAL

Possible indications of the cylinder head gasket leaking between a cylinder and an adjacent water jacket are:

- Engine overheating
- Loss of coolant
- Excessive steam (white smoke) emitting from exhaust
- Coolant foaming

CYLINDER-TO-CYLINDER LEAKAGE TEST

To determine if an engine cylinder head gasket is leaking between adjacent cylinders, follow the procedures in Cylinder Compression Pressure Test (Refer to 9 - ENGINE - DIAGNOSIS AND TESTING). An engine cylinder head gasket leaking between adjacent cylinders will result in approximately a 50–70% reduction in compression pressure.

CYLINDER-TO-WATER JACKET LEAKAGE TEST

WARNING: USE EXTREME CAUTION WHEN THE ENGINE IS OPERATING WITH COOLANT PRESSURE CAP REMOVED.

VISUAL TEST METHOD

With the engine cool, remove the coolant pressure cap. Start the engine and allow it to warm up until thermostat opens.

If a large combustion/compression pressure leak exists, bubbles will be visible in the coolant.

COOLING SYSTEM TESTER METHOD

WARNING: WITH COOLING SYSTEM TESTER IN PLACE, PRESSURE WILL BUILD UP FAST. EXCESSIVE PRESSURE BUILT UP, BY CONTINUOUS ENGINE OPERATION, MUST BE RELEASED TO A SAFE PRESSURE POINT. NEVER PERMIT PRESSURE TO EXCEED 138 kPa (20 psi).

Install Cooling System Tester 7700 or equivalent to pressure cap neck. Start the engine and observe the tester's pressure gauge. If gauge pulsates with every power stroke of a cylinder a combustion pressure leak is evident.

CHEMICAL TEST METHOD

Combustion leaks into the cooling system can also be checked by using Bloc-Chek Kit C-3685-A or equivalent. Perform test following the procedures supplied with the tool kit.

REMOVAL - CYLINDER HEAD

(1) Perform fuel system pressure release procedure **before attempting any repairs.** (Refer to 14 - FUEL SYSTEM/FUEL DELIVERY - STANDARD PROCEDURE)

(2) Disconnect negative battery cable.

(3) Drain cooling system (Refer to 7 - COOLING/ENGINE - STANDARD PROCEDURE).

(4) Remove throttle body air inlet hose and air cleaner housing assembly.

(5) Remove intake manifold (Refer to 9 - ENGINE/MANIFOLDS/INTAKE MANIFOLD - REMOVAL).

(6) Disconnect heater hose from thermostat housing.

(7) Remove heater tube support bracket from cylinder head.

(8) Disconnect camshaft position sensor electrical connector.

(9) Disconnect EGR solenoid electrical connector (If equipped).

(10) Raise vehicle on hoist.

(11) Disconnect exhaust pipe from exhaust manifold.

(12) Remove accessory drive belts (Refer to 7 - COOLING/ACCESSORY DRIVE/DRIVE BELTS - REMOVAL).

(13) Remove crankshaft damper (Refer to 9 - ENGINE/ENGINE BLOCK/VIBRATION DAMPER - REMOVAL).

(14) Remove front timing belt cover (Refer to 9 - ENGINE/VALVE TIMING/TIMING BELT / CHAIN COVER(S) - REMOVAL).

CYLINDER HEAD (Continued)

(15) Remove timing belt (Refer to 9 - ENGINE/VALVE TIMING/TIMING BELT/CHAIN AND SPROCKETS - REMOVAL).

(16) Remove camshaft sprockets (Refer to 9 - ENGINE/VALVE TIMING/TIMING BELT/CHAIN AND SPROCKETS - REMOVAL).

(17) Remove timing belt idler pulley and rear timing belt cover.

(18) Remove cylinder head cover (Refer to 9 - ENGINE/CYLINDER HEAD/CYLINDER HEAD COVER(S) - REMOVAL).

(19) Remove camshafts and rocker arms (Refer to 9 - ENGINE/CYLINDER HEAD/CAMSHAFT(S) - REMOVAL).

(20) Remove cylinder head bolts and remove cylinder head from engine block.

(21) Inspect and clean cylinder head (Refer to 9 - ENGINE - STANDARD PROCEDURE).

CLEANING

To ensure engine gasket sealing, proper surface preparation must be performed, especially with the use of aluminum engine components and multi-layer steel cylinder head gaskets.

NOTE: Multi-Layer Steel (MLS) head gaskets require a scratch free sealing surface.

Remove all gasket material from cylinder head and block. (Refer to 9 - ENGINE - STANDARD PROCEDURE - ENGINE GASKET SURFACE PREPARATION) Be careful not to gouge or scratch the aluminum head sealing surface.

Clean all engine oil passages.

INSPECTION

(1) Cylinder head must be flat within 0.1 mm (0.004 in.) (Fig. 9).

(2) Inspect camshaft bearing journals for scoring.

(3) Remove carbon and varnish deposits from inside of valve guides with a reliable guide cleaner.

(4) Using a small hole gauge and a micrometer, measure valve guides in 3 places top, middle and bottom (Fig. 10). (Refer to 9 - ENGINE - SPECIFICATIONS) Replace guides if they are not within specification.

(5) Check valve guide height (Fig. 11).

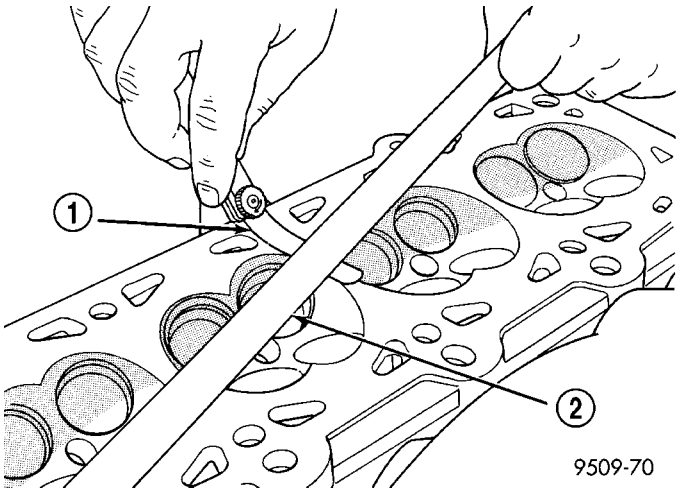

Fig. 9 Checking Cylinder Head Flatness

1 - FEELER GAUGE
2 - STRAIGHT EDGE

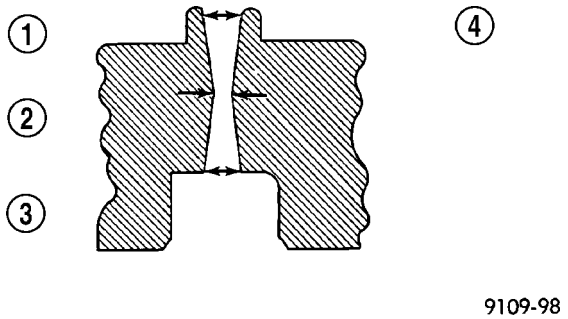

Fig. 10 Checking Wear on Valve Guide—Typical

1 - TOP
2 - MIDDLE
3 - BOTTOM
4 - CUT AWAY VIEW OF VALVE GUIDE MEASUREMENT LOCATIONS

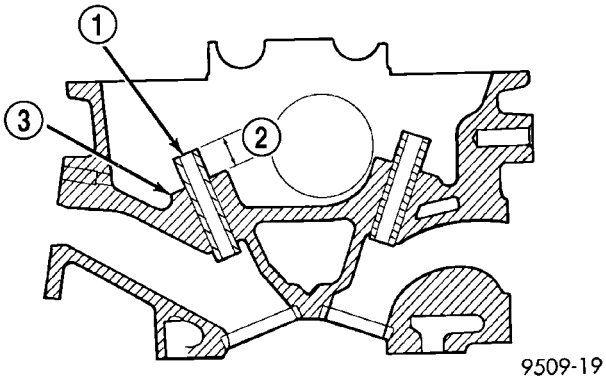

Fig. 11 Valve Guide Height

1 - VALVE GUIDE
2 - 13.25 - 13.75 MM (0.521 - 0.541 IN.)
3 - SPRING SEAT

CYLINDER HEAD (Continued)

INSTALLATION - CYLINDER HEAD

NOTE: The Cylinder head bolts should be examined BEFORE reuse. If the threads are necked down, the bolts must be replaced (Fig. 12).

Necking can be checked by holding a scale or straight edge against the threads. If all the threads do not contact the scale, the bolt should be replaced.

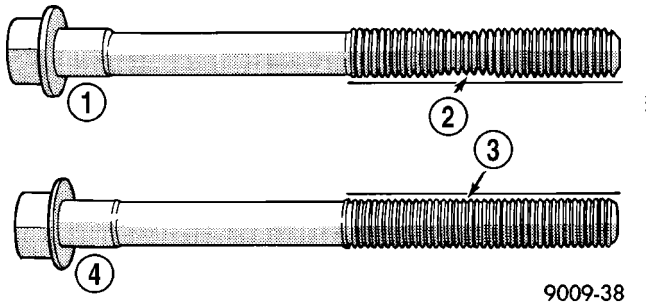

Fig. 12 Checking Bolts for Stretching (Necking)

1 - STRETCHED BOLT
2 - THREADS ARE NOT STRAIGHT ON LINE
3 - THREADS ARE STRAIGHT ON LINE
4 - UNSTRETCHED BOLT

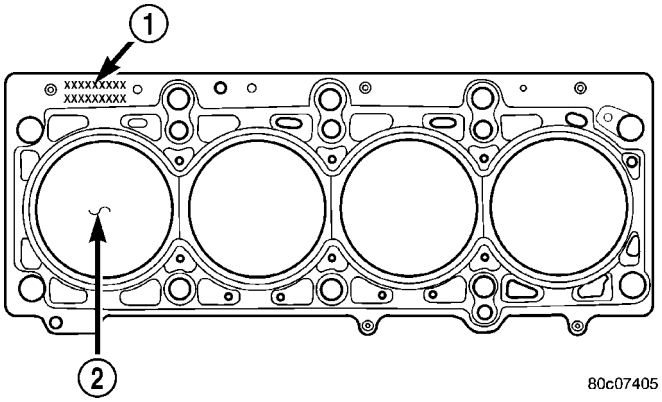

Fig. 13 Cylinder Head Gasket Positioning

1 - PART NUMBER FACES UP
2 - NO. 1 CYLINDER

(1) Before installing the bolts, the threads should be coated with engine oil.

(2) Position new cylinder head gasket on block with part number facing up (Fig. 13). Ensure gasket is seated over the locating dowels in block.

(3) Install cylinder head on block.

(4) Tighten the cylinder head bolts in the sequence shown in (Fig. 14). Using the 4 step torque turn method, tighten according to the following values:

First:	All bolts to 34 N·m (25 ft. lbs.)
Second:	Bolts 1–6 to 68 N·m (50 ft. lbs.)
	Bolts 7–10 to 49 N·m (35 ft. lbs.)
Third:	Bolts 1–6 to 68 N·m (50 ft. lbs.)
	Bolts 7–10 to 49 N·m (35 ft. lbs.)
Tighten all bolts in the specified sequence an additional 90° (1/4 Turn)	

CAUTION: Do not use a torque wrench for the Fourth step.

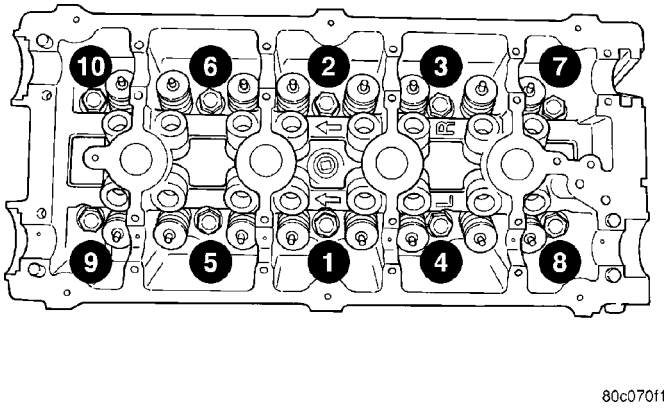

Fig. 14 Cylinder Head Tightening Sequence

(5) Install rocker arms and camshafts (Refer to 9 - ENGINE/CYLINDER HEAD/CAMSHAFT(S) - INSTALLATION).

(6) Install cylinder head cover (Refer to 9 - ENGINE/CYLINDER HEAD/CYLINDER HEAD COVER(S) - INSTALLATION).

(7) Install rear timing belt cover and timing belt idler pulley (Refer to 9 - ENGINE/VALVE TIMING/ TIMING BELT / CHAIN COVER(S) - INSTALLATION).

(8) Install camshaft sprockets (Refer to 9 - ENGINE/VALVE TIMING/TIMING BELT/CHAIN AND SPROCKETS - INSTALLATION).

(9) Install timing belt (Refer to 9 - ENGINE/ VALVE TIMING/TIMING BELT/CHAIN AND SPROCKETS - INSTALLATION).

(10) Install front timing belt cover (Refer to 9 - ENGINE/VALVE TIMING/TIMING BELT / CHAIN COVER(S) - INSTALLATION).

(11) Install crankshaft damper (Refer to 9 - ENGINE/ENGINE BLOCK/VIBRATION DAMPER - INSTALLATION).

(12) Install accessory drive belts (Refer to 7 - COOLING/ACCESSORY DRIVE/DRIVE BELTS - INSTALLATION).

CYLINDER HEAD (Continued)

(13) Connect exhaust pipe to exhaust manifold. Torque fasteners to 28 N·m (250 in. lbs.).

(14) Connect camshaft position sensor electrical connector.

(15) Connect EGR solenoid electrical connector (If equipped).

(16) Install heater tube support bracket to cylinder head.

(17) Connect heater hose to thermostat housing.

(18) Install intake manifold (Refer to 9 - ENGINE/ MANIFOLDS/INTAKE MANIFOLD - INSTALLATION).

(19) Install throttle body air inlet hose and air cleaner housing assembly.

(20) Fill cooling system (Refer to 7 - COOLING/ ENGINE - STANDARD PROCEDURE).

(21) Connect negative battery cable.

CAMSHAFT OIL SEAL(S)

REMOVAL

(1) Remove timing belt. (Refer to 9 - ENGINE/ VALVE TIMING/TIMING BELT/CHAIN AND SPROCKETS - REMOVAL)

(2) Hold each camshaft sprocket with Special Tool C-4687 and adaptor C-4687-1, while removing center bolt (Fig. 15).

(3) Remove camshaft sprockets.

(4) Remove rear timing belt cover. (Refer to 9 - ENGINE/VALVE TIMING/TIMING BELT / CHAIN COVER(S) - REMOVAL)

(5) Remove camshaft seal using Special Tool C-4679A (Fig. 16).

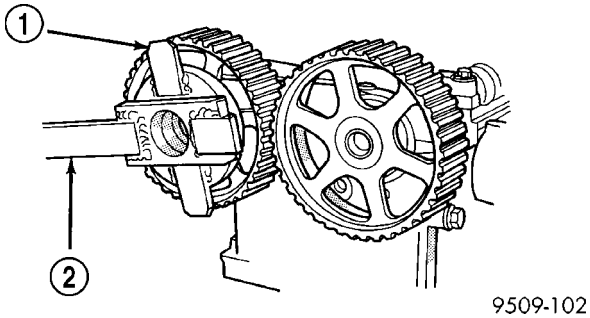

Fig. 15 Camshaft Sprocket - Removal/Installation

1 - ADAPTER C-4687–1
2 - SPECIAL TOOL C-4687

CAUTION: Do not nick shaft seal surface or seal bore.

INSTALLATION

(1) Shaft seal surface must be free of varnish, dirt or nicks. Polish with 400 grit paper if necessary.

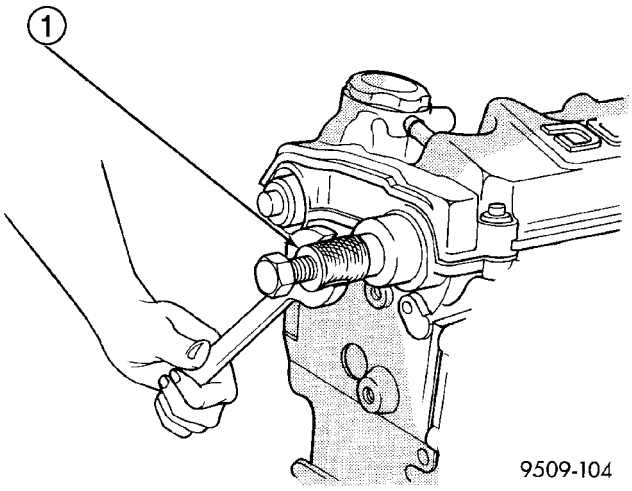

Fig. 16 Camshaft Oil Seal - Removal With C-4679A

1 - SPECIAL TOOL C-4679A

(2) Install camshaft seals into cylinder head using Special Tool MD-998306 until flush with head (Fig. 17).

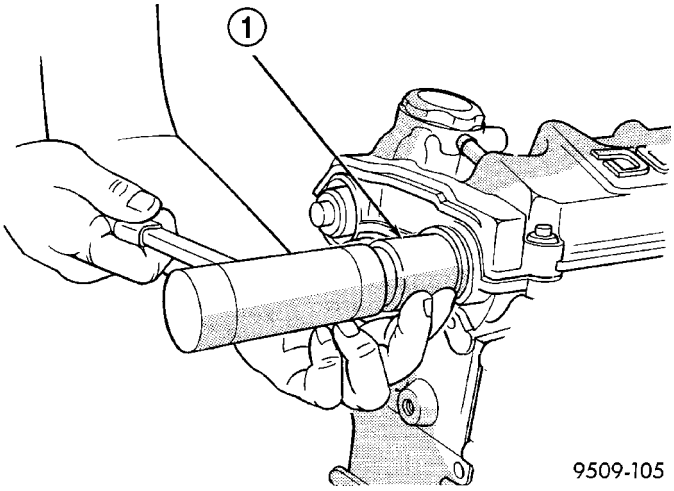

Fig. 17 Camshaft Seal - Installation

1 - SPECIAL TOOL MD 998306

(3) Install rear timing belt cover (Refer to 9 - ENGINE/VALVE TIMING/TIMING BELT / CHAIN COVER(S) - INSTALLATION).

(4) Install camshaft sprockets. Hold each camshaft sprocket with Special Tool C-4687 and adaptor C-4687-1 and tighten center bolt to 115 N·m (85 ft. lbs.) (Fig. 15).

(5) Install timing belt and front timing belt cover (Refer to 9 - ENGINE/VALVE TIMING/TIMING BELT/CHAIN AND SPROCKETS - INSTALLATION) (Refer to 9 - ENGINE/VALVE TIMING/TIMING BELT / CHAIN COVER(S) - INSTALLATION).

CAMSHAFT(S)

DESCRIPTION

Both nodular iron camshafts have six bearing journal surfaces and two cam lobes per cylinder (Fig. 18). Flanges at the rear journals control camshaft end play. Provision for a cam position sensor is located on the intake camshaft on the rear of the cylinder head. A hydrodynamic oil seal is used for oil control at the front of the camshaft.

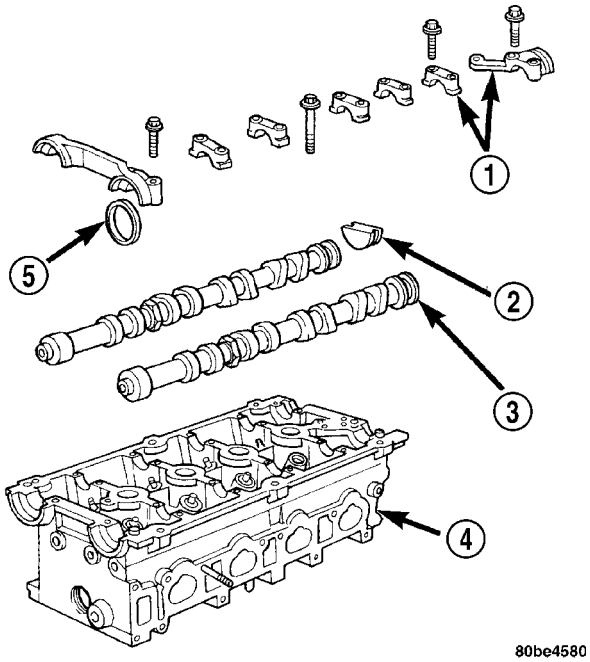

Fig. 18 Cylinder Head and Camshafts

1 - CAMSHAFT BEARING CAPS
2 - PLUG
3 - CAMSHAFT
4 - CYLINDER HEAD
5 - CAMSHAFT OIL SEAL

OPERATION

The camshaft is driven by the crankshaft via drive sprockets and belt. The camshaft has precisely machined lobes to provide accurate valve timing and duration.

STANDARD PROCEDURE - CAMSHAFT END-PLAY

(1) Oil camshaft journals and install camshaft **WITHOUT** cam follower assemblies. Install rear cam caps and tighten screws to specified torque.

(2) Using a suitable tool, move camshaft as far rearward as it will go.

(3) Zero dial indicator (Fig. 19).

(4) Move camshaft as far forward as it will go.

(5) Record reading on dial indicator. For end play specification, (Refer to 9 - ENGINE - SPECIFICATIONS).

(6) If end play is excessive, check cylinder head and camshaft for wear; replace as necessary.

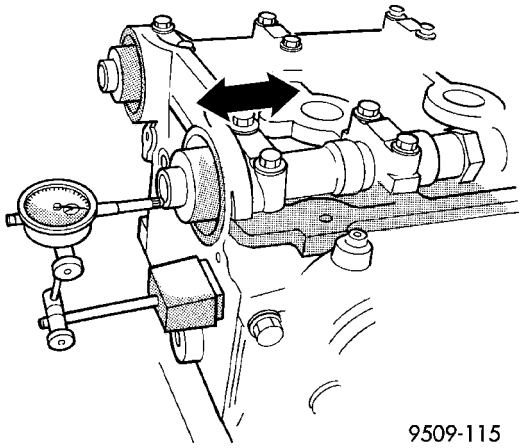

Fig. 19 Camshaft End Play - Typical

REMOVAL

(1) Remove cylinder head cover (Refer to 9 - ENGINE/CYLINDER HEAD/CYLINDER HEAD COVER(S) - REMOVAL).

(2) Remove camshaft position sensor and camshaft target magnet (Refer to 8 - ELECTRICAL/IGNITION CONTROL/CAMSHAFT POSITION SENSOR - REMOVAL).

(3) Remove timing belt (Refer to 9 - ENGINE/VALVE TIMING/TIMING BELT/CHAIN AND SPROCKETS - REMOVAL).

(4) Remove camshaft sprockets and rear timing belt cover (Refer to 9 - ENGINE/VALVE TIMING/TIMING BELT / CHAIN COVER(S) - REMOVAL).

(5) Bearing caps are identified for location. Remove the outside bearing caps first (Fig. 20).

(6) Loosen the camshaft bearing cap attaching fasteners in sequence shown (Fig. 21) one camshaft at a time.

CAUTION: Camshafts are not interchangeable. The intake cam number 6 thrust bearing face spacing is wider.

(7) Identify the camshafts before removing from the head. The camshafts are not interchangeable.

(8) Remove camshafts from cylinder head.

NOTE: If removing rocker arms, identify for reinstallation in the original position.

CAMSHAFT(S) (Continued)

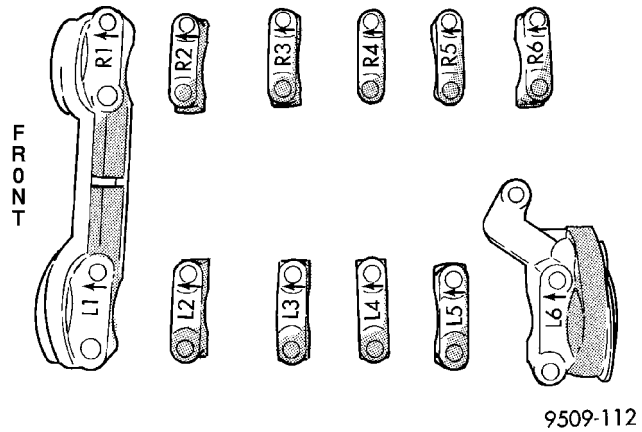

Fig. 20 Camshaft Bearing Cap Identification

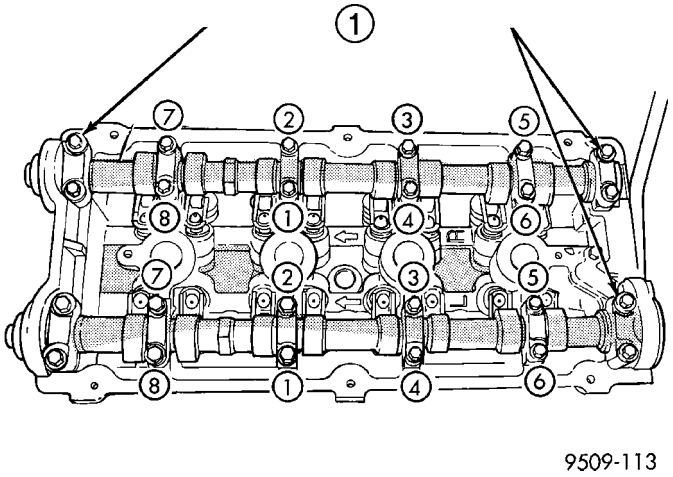

Fig. 21 Camshaft Bearing Cap - Removal

1 - REMOVE OUTSIDE BEARING CAPS FIRST

CLEANING

Clean camshaft with a suitable solvent.

INSPECTION

(1) Inspect camshaft bearing journals for damage and binding (Fig. 22). If journals are binding, check the cylinder head for damage. Also check cylinder head oil holes for clogging.

(2) Check the cam lobe and bearing surfaces for abnormal wear and damage. Replace camshaft if defective.

NOTE: If camshaft is replaced due to lobe wear or damage, always replace the rocker arms.

(3) Measure the lobe actual wear (unworn area - wear zone = actual wear) (Fig. 22) and replace camshaft if out of limit. Standard value is 0.0254 mm (0.001 in.), wear **limit** is 0.254 mm (0.010 in.).

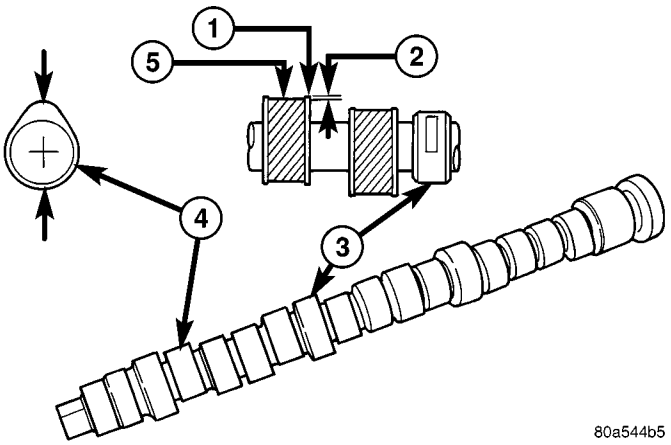

Fig. 22 Checking Camshaft(s) for Wear

1 - UNWORN AREA
2 - ACTUAL WEAR
3 - BEARING JOURNAL
4 - LOBE
5 - WEAR ZONE

INSTALLATION

CAUTION: Ensure that NONE of the pistons are at top dead center when installing the camshafts.

(1) Lubricate all camshaft bearing journals, rocker arms and camshaft lobes.

(2) Install all rocker arms in original positions, if reused.

(3) Position camshafts on cylinder head bearing journals. Install right and left camshaft bearing caps No. 2 – 5 and right No. 6. Tighten M6 fasteners to 12 N·m (105 in. lbs.) in sequence shown in (Fig. 23).

(4) Apply Mopar® Gasket Maker to No. 1 and No. 6 bearing caps (Fig. 24). Install bearing caps and tighten M8 fasteners to 28 N·m (250 in. lbs.).

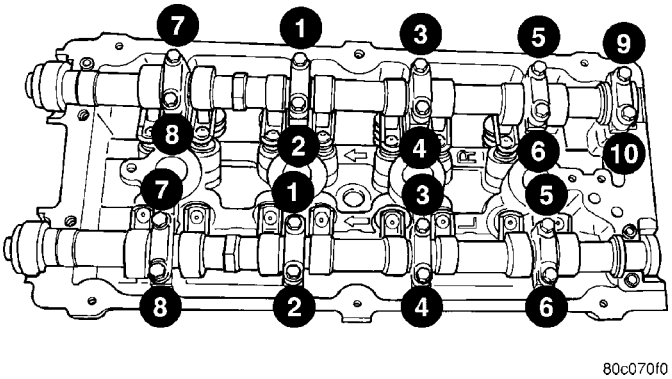

Fig. 23 Camshaft Bearing Cap Tightening Sequence

NOTE: Bearing end caps must be installed before seals can be installed.

(5) Install camshaft oil seals (Refer to 9 - ENGINE/CYLINDER HEAD/CAMSHAFT OIL SEAL(S) - INSTALLATION).

CAMSHAFT(S) (Continued)

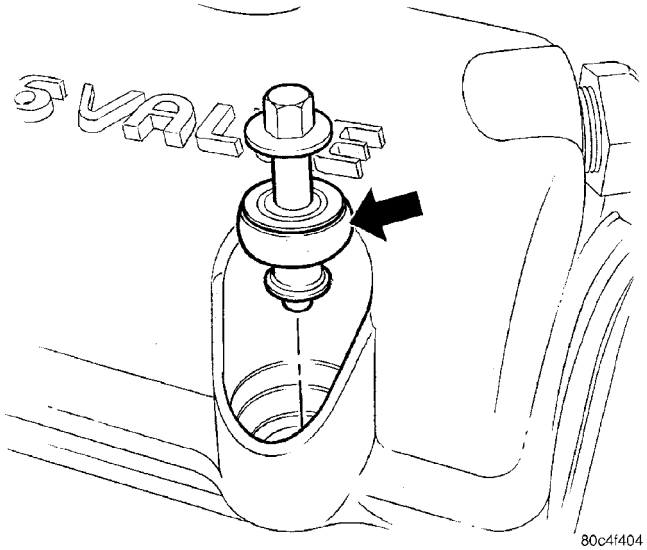

Fig. 27 Cylinder Head Cover Bolt Seals

(6) Install camshaft target magnet and camshaft position sensor.

(7) Install cylinder head cover (Refer to 9 - ENGINE/CYLINDER HEAD/CYLINDER HEAD COVER(S) - INSTALLATION).

(8) Install rear timing belt cover and camshaft sprockets (Refer to 9 - ENGINE/VALVE TIMING/TIMING BELT / CHAIN COVER(S) - INSTALLATION).

(9) Install timing belt and front timing belt cover(Refer to 9 - ENGINE/VALVE TIMING/TIMING BELT/ CHAIN AND SPROCKETS - INSTALLATION).

CYLINDER HEAD COVER

REMOVAL

(1) Remove ignition coil and plug wires.

(2) Disconnect PCV and make-up air hoses from cylinder head cover.

(3) Remove the cylinder head cover fasteners.

(4) Remove cylinder head cover from cylinder head.

CLEANING

Clean cylinder head and cover mating surfaces using a suitable solvent.

INSPECTION

Inspect cover rails for flatness.

INSTALLATION

NOTE: Replace spark plug well seals when installing a new cylinder head cover gasket.

(1) Install new cylinder head cover gaskets (Fig. 25) and spark plug well seals (Fig. 26).

(2) Replace cylinder head cover bolt seals (Fig. 27).

CAUTION: Do not allow oil or solvents to contact the timing belt as they can deteriorate the rubber and cause tooth skipping.

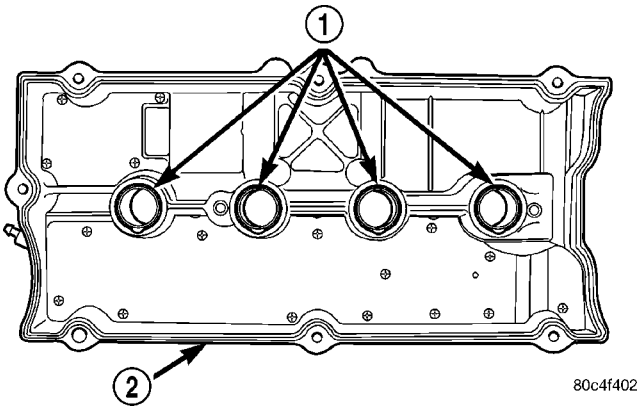

Fig. 25 Cylinder Head Cover Gasket and Spark Plug Well Seals

1 - SPARK PLUG WELL SEALS
2 - GASKET

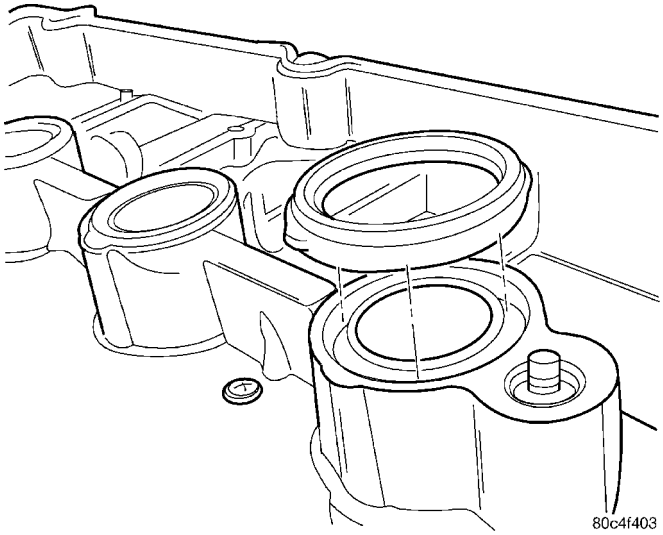

Fig. 26 Spark Plug Well Seals

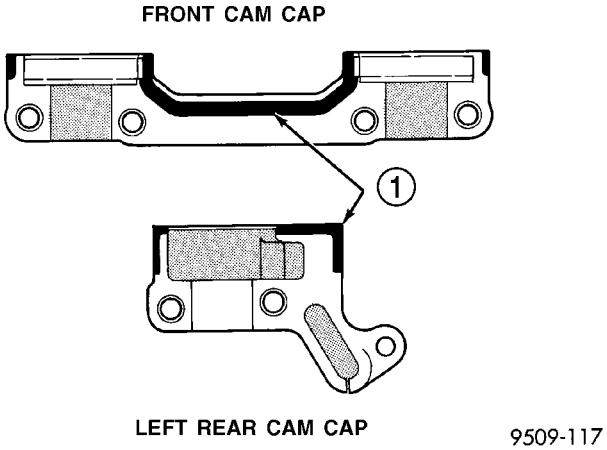

Fig. 24 Camshaft Bearing Cap Sealing

1 - 1.5 mm (.060 in.) DIAMETER BEAD OF MOPAR GASKET MAKER

CYLINDER HEAD COVER (Continued)

(3) Apply Mopar® Engine RTV GEN II at the camshaft cap corners and at the top edge of the 1/2 round seal (Fig. 28).

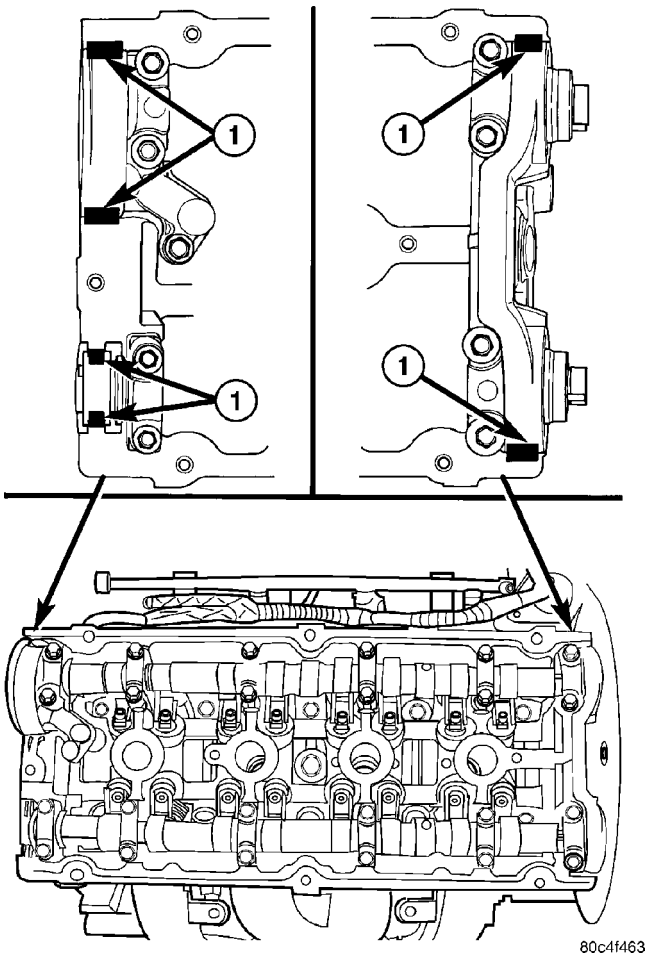

Fig. 28 Sealer Locations

1 – SEALER LOCATION

CAUTION: When installing cylinder head cover bolts, be careful not to interchange the two (2) center bolts with the seven (7) perimeter bolts. The two (2) center bolts contain an aluminum washer between the bolt head and torque limiter for sealing purposes.

(4) Install cylinder head cover assembly to cylinder head. Install all bolts, ensuring the two (2) bolts containing the sealing washer are located in the center locations of cover. Tighten bolts in sequence shown in (Fig. 29). Using a 3 step torque method as follows:

(a) Tighten all bolts to 4.5 N·m (40 in. lbs.).
(b) Tighten all bolts to 9.0 N·m (80 in. lbs.).
(c) Tighten all bolts to 12 N·m (105 in. lbs.).

(5) Connect PCV and make-up air hoses to cylinder head cover.

(6) Install ignition coil and plug wires. Tighten fasteners to 12 N·m (105 in. lbs.).

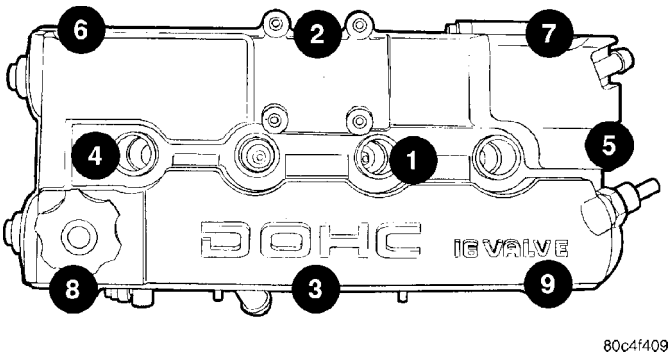

Fig. 29 Cylinder Head Cover Tightening Sequence

HYDRAULIC LASH ADJUSTERS

DIAGNOSIS AND TESTING

HYDRAULIC LASH ADJUSTER NOISE DIAGNOSIS

A tappet-like noise may be produced from several items. Check the following items.

(1) Engine oil level too high or too low. This may cause aerated oil to enter the adjusters and cause them to be spongy.

(2) Insufficient running time after rebuilding cylinder head. Low speed running up to 1 hour may be required.

(3) During this time, turn engine off and let set for a few minutes before restarting. Repeat this several times after engine has reached normal operating temperature.

(4) Low oil pressure.

(5) The oil restrictor (integral to the cylinder head gasket) in the vertical oil passage to the cylinder head is plugged with debris.

(6) Air ingested into oil due to broken or cracked oil pump pick up.

(7) Worn valve guides.

(8) Rocker arm ears contacting valve spring retainer.

(9) Rocker arm loose, adjuster stuck or at maximum extension and still leaves lash in the system.

(10) Faulty lash adjuster.

- Check lash adjusters for sponginess while installed in cylinder head. Depress part of rocker arm over adjuster. Normal adjusters should feel very firm. Spongy adjusters can be bottomed out easily.
- Remove suspected lash adjusters, and replace as necessary.

HYDRAULIC LASH ADJUSTERS (Continued)

REMOVAL

NOTE: This procedure is for in-vehicle service with camshafts installed.

(1) Remove cylinder head cover (Refer to 9 - ENGINE/CYLINDER HEAD/CYLINDER HEAD COVER(S) - REMOVAL).
(2) Remove rocker arm (Refer to 9 - ENGINE/CYLINDER HEAD/ROCKER ARMS - REMOVAL).
(3) Remove hydraulic lifter (Fig. 30).
(4) Repeat removal procedure for each hydraulic lifter.
(5) If reusing, mark each hydraulic lifter for reassembly in original position. Lifters are serviced as an assembly.

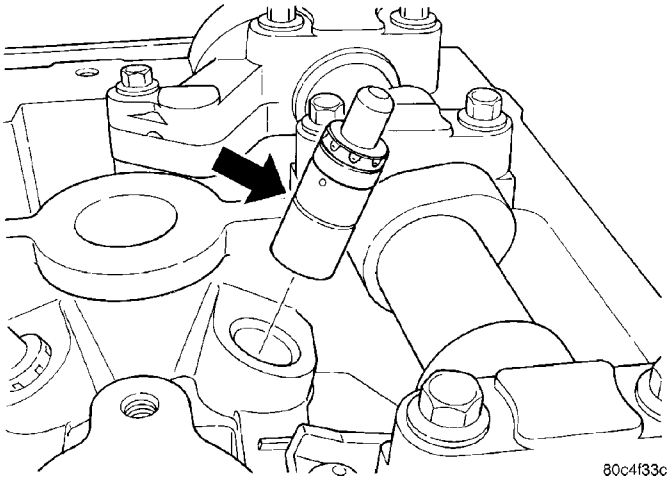

Fig. 30 Hydraulic Lifter

INSTALLATION

(1) Install hydraulic lifter (Fig. 30). Ensure the lifters are at least partially full of engine oil. This is indicated by little or no plunger travel when the lifter is depressed.
(2) Install rocker arm (Refer to 9 - ENGINE/CYLINDER HEAD/ROCKER ARMS - INSTALLATION).
(3) Repeat installation procedure for each hydraulic lifter.
(4) Install cylinder head cover (Refer to 9 - ENGINE/CYLINDER HEAD/CYLINDER HEAD COVER(S) - INSTALLATION).

INTAKE/EXHAUST VALVES & SEATS

DESCRIPTION

The valves are made of heat resistant steel. They have chrome plated stems to prevent scuffing. Viton rubber valve stem seals are integral with the spring seats. The valves have three-bead lock keepers to retain springs and to promote valve rotation.

OPERATION

The four valves per cylinder (two intake and two exhaust) are opened by using roller camshaft followers which pivot on hydraulic lash adjusters.

CLEANING

(1) Clean all valves thoroughly and discard burned, warped and cracked valves.

ROCKER ARMS

REMOVAL

NOTE: This procedure is for in-vehicle service with camshafts installed.

(1) Disconnect negative battery cable.
(2) Remove cylinder head cover (Refer to 9 - ENGINE/CYLINDER HEAD/CYLINDER HEAD COVER(S) - REMOVAL).
(3) Remove spark plugs.
(4) Rotate engine until the camshaft lobe, on the rocker arm being removed, is positioned on its base circle (heel). Also, the piston should be a minimum of 6.3 mm (0.25 in) below TDC position.

CAUTION: If cam follower assemblies are to be reused, always mark position for reassembly in their original positions.

(5) Using Special Tools 8215-A and 8436 slowly depress valve assembly until rocker arm can be removed (Fig. 31).
(6) Repeat removal procedure for each rocker arm.

ROCKER ARMS (Continued)

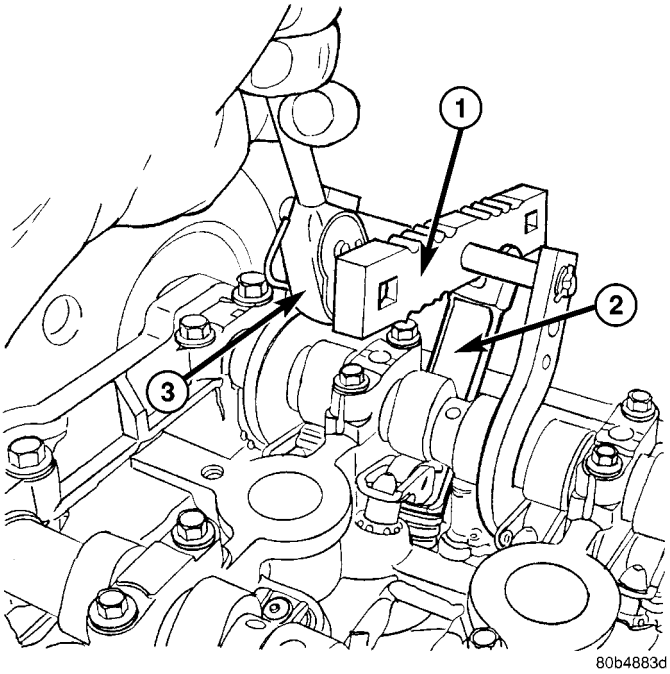

Fig. 31 Rocker Arm - Removal/Installation

1 - SPECIAL TOOL 8215-A
2 - SPECIAL TOOL 8436
3 - 3/8″ DRIVE RACHET

INSPECTION

Inspect the rocker arm for wear or damage (Fig. 32). Replace as necessary.

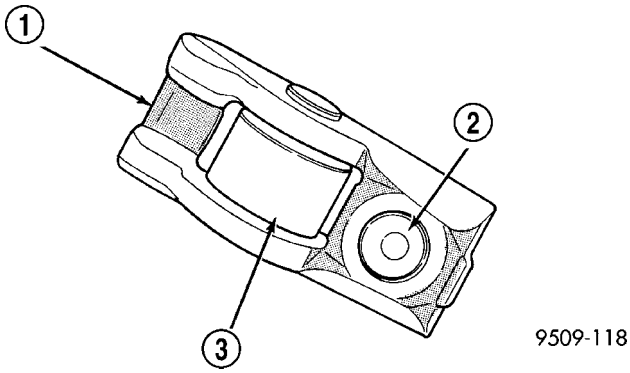

Fig. 32 Rocker Arm

1 - TIP
2 - LASH ADJUSTER POCKET
3 - ROLLER

INSTALLATION

(1) Lubricate rocker arm with clean engine oil.

(2) Using Special Tools 8215-A and 8436 slowly depress valve assembly until rocker arm can be installed on the hydraulic lifter and valve stem (Fig. 31).

(3) Repeat installation procedure for each rocker arm.

(4) Install spark plugs.

(5) Install cylinder head cover (Refer to 9 - ENGINE/CYLINDER HEAD/CYLINDER HEAD COVER(S) - INSTALLATION).

(6) Connect negative battery cable.

VALVE SPRINGS AND SEALS

REMOVAL

REMOVAL - CYLINDER HEAD ON

(1) Disconnect negative battery cable.

(2) Remove timing belt (Refer to 9 - ENGINE/VALVE TIMING/TIMING BELT/CHAIN AND SPROCKETS - REMOVAL).

(3) Remove cylinder head cover (Refer to 9 - ENGINE/CYLINDER HEAD/CYLINDER HEAD COVER(S) - REMOVAL).

(4) Remove camshafts (Refer to 9 - ENGINE/CYLINDER HEAD/CAMSHAFT(S) - REMOVAL).

(5) Rotate crankshaft until piston is at TDC.

(6) With air hose attached to adapter tool installed in spark plug hole, apply 90-120 psi air pressure.

(7) Using Special Tool MD-998772-A with adapter 6779 (Fig. 33), compress valve springs and remove valve locks.

(8) Remove valve spring(s).

(9) Remove valve stem seal(s) by a using valve stem seal tool (Fig. 35).

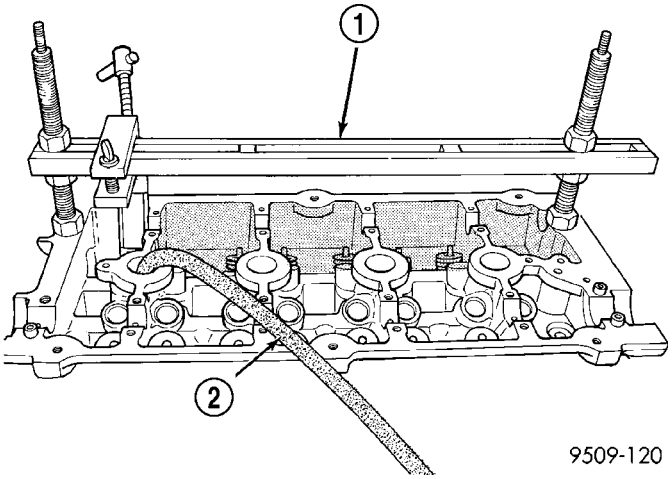

Fig. 33 Valve Spring - Removal/Installation

1 - VALVE SPRING COMPRESSOR MD 998772A
2 - AIR HOSE

REMOVAL - CYLINDER HEAD OFF

(1) With cylinder head removed from cylinder block, compress valve springs using a universal valve spring compressor.

(2) Remove valve retaining locks, valve spring retainers, valve stem seals and valve springs.

VALVE SPRINGS AND SEALS (Continued)

(3) Before removing valves, **remove any burrs from valve stem lock grooves to prevent damage to the valve guides.** Identify valves, locks and retainers to insure installation in original location.

(4) Inspect the valves. (Refer to 9 - ENGINE/CYLINDER HEAD/VALVE SPRINGS - INSPECTION)

INSPECTION

(1) Whenever valves have been removed for inspection, reconditioning or replacement, valve springs should be tested for correct tension. Discard the springs that do not meet specifications. The following specifications apply to both intake and exhaust valves springs:

- Valve Closed Nominal Tension—76 lbs. @ 38.0 mm (1.50 in.)
- Valve Open Nominal Tension—136 lbs. @ 29.75 mm (1.17 in.)

(2) Inspect each valve spring for squareness with a steel square and surface plate, test springs from both ends. If the spring is more than 1.5 mm (1/16 inch) out of square, install a new spring.

INSTALLATION

INSTALLATION - CYLINDER HEAD ON

(1) Install valve seal/valve spring seat assembly (Fig. 34). Push the assembly down to seat it onto the valve guide.

(2) Install valve spring and retainer, use Special Tool MD-998772-A with adapter 6779 to compress valve springs only enough to install locks (Fig. 33). Correct alignment of tool is necessary to avoid nicking valve stems.

(3) Remove air hose and install spark plugs.

(4) Install camshafts (Refer to 9 - ENGINE/CYLINDER HEAD/CAMSHAFT(S) - INSTALLATION).

(5) Install cylinder head cover (Refer to 9 - ENGINE/CYLINDER HEAD/CYLINDER HEAD COVER(S) - INSTALLATION).

(6) Install timing belt (Refer to 9 - ENGINE/VALVE TIMING/TIMING BELT/CHAIN AND SPROCKETS - INSTALLATION).

(7) Connect negative battery cable.

INSTALLATION - CYLINDER HEAD OFF

(1) Coat valve stems with clean engine oil and insert in cylinder head.

(2) Install new valve stem seals on all valves using a valve stem seal tool (Fig. 35). The valve stem seals should be pushed firmly and squarely over valve guide.

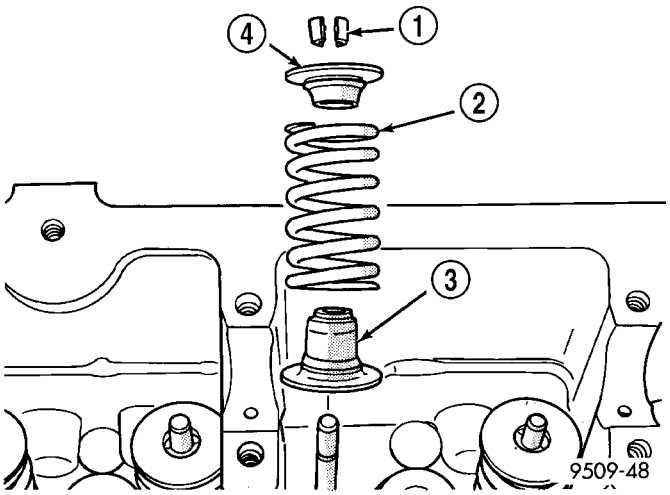

Fig. 34 Valve Stem Seal/Valve Spring Seat

1 - VALVE RETAINING LOCKS
2 - VALVE SPRING
3 - VALVE SEAL AND VALVE SPRING SEAT ASSEMBLY
4 - VALVE SPRING RETAINER

CAUTION: When oversize valves are used, the corresponding oversize valve seal must also be used. Excessive guide wear may result if oversize seals are not used with oversize valves.

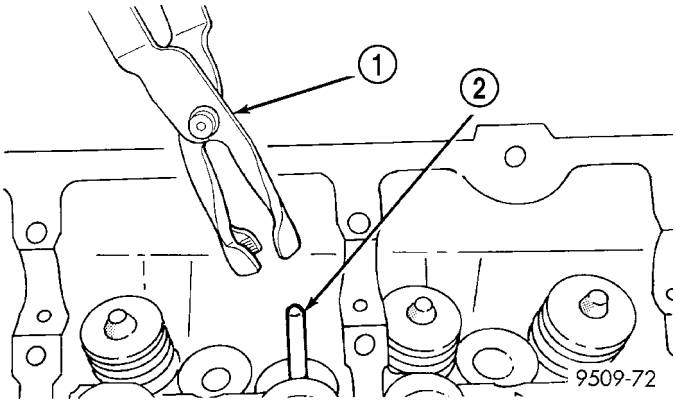

Fig. 35 Valve Stem Oil Seal Tool

1 - VALVE SEAL TOOL
2 - VALVE STEM

(3) Install valve springs and retainers. Compress valve springs only enough to install locks, taking care not to misalign the direction of compression. Nicked valve stems may result from misalignment of the valve spring compressor.

CAUTION: When depressing the valve spring retainers with valve spring compressor the locks can become dislocated. Ensure both locks are in the correct location after removing tool.

VALVE SPRINGS AND SEALS (Continued)

(4) Check the valve spring installed height B after refacing the valve and seat (Fig. 36). Make sure measurements are taken from top of spring seat to the bottom surface of spring retainer. If height is greater than 38.75 mm (1.525 in.), install a 0.762 mm (0.030 in.) spacer under the valve spring seat to bring spring height back within specification.

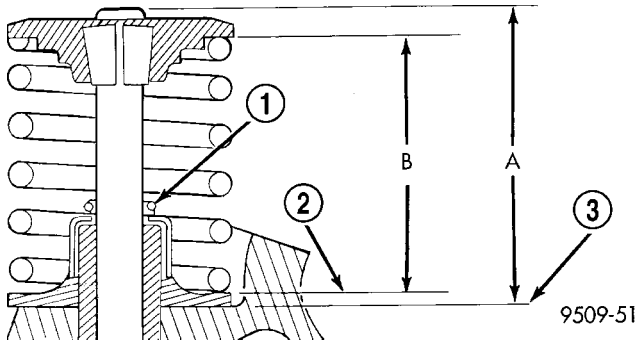

Fig. 36 Checking Spring Installed Height and Valve Tip Height Dimensions

1 - GARTER SPRING
2 - VALVE SPRING SEAT
3 - CYLINDER HEAD SURFACE

ENGINE BLOCK

DESCRIPTION

The cast iron cylinder block is a two-piece assembly, consisting of the cylinder block and bedplate (Fig. 37). The bedplate incorporates the main bearing caps and bolts to the cylinder block. This design offers a much stronger lower end and increased cylinder block rigidity. The rear oil seal retainer is integral with the block. The bedplate and block are serviced as an assembly.

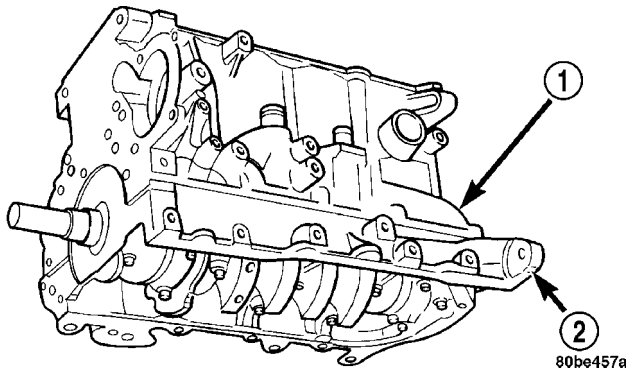

Fig. 37 Cylinder Block and Bedplate

1 - CYLINDER BLOCK
2 - BEDPLATE

STANDARD PROCEDURE - CYLINDER BORE HONING

(1) Used carefully, the cylinder bore resizing hone, recommended tool C-823 or equivalent, equipped with 220 grit stones, is the best tool for this honing procedure. In addition to deglazing, it will reduce taper and out-of-round as well as removing light scuffing, scoring or scratches. Usually a few strokes will clean up a bore and maintain the required limits.

(2) Deglazing of the cylinder walls may be done using a cylinder surfacing hone, recommended tool C-3501 or equivalent, equipped with 280 grit stones, if the cylinder bore is straight and round. 20–60 strokes depending on the bore condition, will be sufficient to provide a satisfactory surface. Use a light honing oil. **Do not use engine or transmission oil, mineral spirits or kerosene.** Inspect cylinder walls after each 20 strokes.

(3) Honing should be done by moving the hone up and down fast enough to get a cross-hatch pattern. When hone marks **intersect** at 40-60 degrees, the cross hatch angle is most satisfactory for proper seating of rings (Fig. 38).

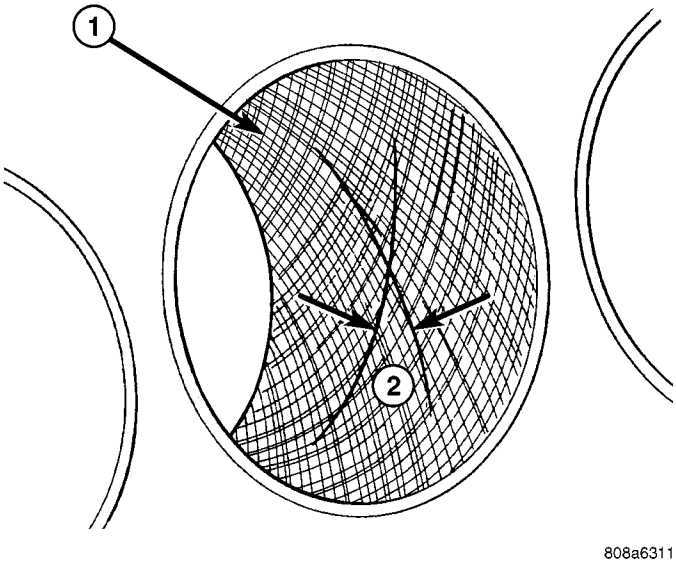

Fig. 38 Cylinder Bore Cross-Hatch Pattern

1 - CROSS-HATCH PATTERN
2 - 40°–60°

(4) A controlled hone motor speed between 200–300 RPM is necessary to obtain the proper cross-hatch angle. The number of up and down strokes per minute can be regulated to get the desired 40–60 degree angle. Faster up and down strokes increase the cross-hatch angle.

(5) After honing, it is necessary that the block be cleaned again to remove all traces of abrasive.

ENGINE BLOCK (Continued)

CAUTION: Ensure all abrasives are removed from engine parts after honing. It is recommended that a solution of soap and hot water be used with a brush and the parts then thoroughly dried. The bore can be considered clean when it can be wiped clean with a white cloth and cloth remains clean. Oil the bores after cleaning to prevent rusting.

CLEANING

Clean cylinder block thoroughly using a suitable cleaning solvent.

INSPECTION

ENGINE BLOCK

(1) Clean cylinder block thoroughly and check all core hole plugs for evidence of leaking.

(2) If new core plugs are to be installed, (Refer to 9 - ENGINE - STANDARD PROCEDURE - ENGINE CORE AND OIL GALLERY PLUGS).

(3) Examine block and cylinder bores for cracks or fractures.

(4) Check block deck surfaces for flatness. Deck surface must be within service limit of 0.1 mm (0.004 in.).

CYLINDER BORE

NOTE: The cylinder bores should be measured at normal room temperature, 21°C (70°F).

The cylinder walls should be checked for out-of-round and taper with Tool C119 or equivalent (Fig. 39) (Refer to 9 - ENGINE - SPECIFICATIONS). If the cylinder walls are badly scuffed or scored, the cylinder block should be replaced, and new pistons and rings fitted.

Measure the cylinder bore at three levels in directions A and B (Fig. 39). Top measurement should be 10 mm (3/8 in.) down and bottom measurement should be 10 mm (3/8 in.) up from bottom of bore. (Refer to 9 - ENGINE - SPECIFICATIONS).

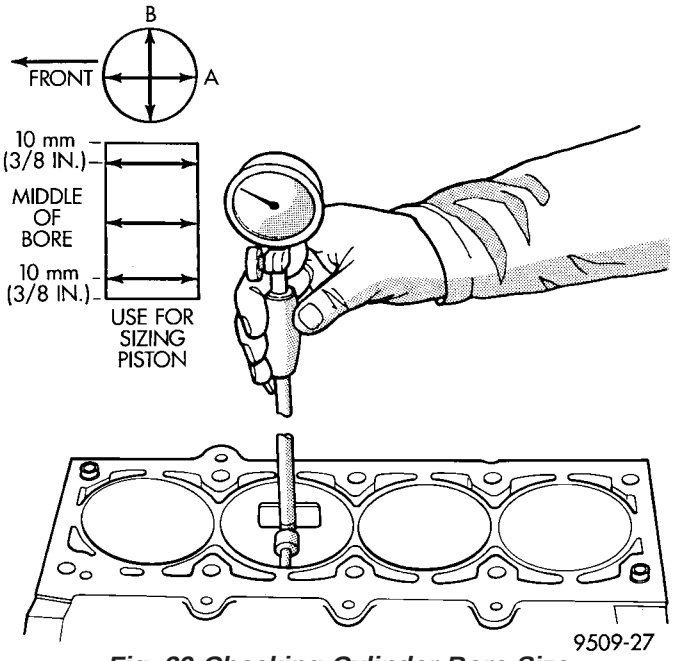

Fig. 39 Checking Cylinder Bore Size

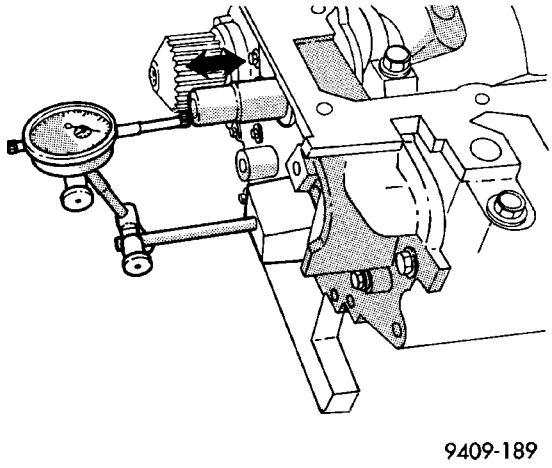

Fig. 40 Checking Crankshaft End Play

CRANKSHAFT

STANDARD PROCEDURE - CRANKSHAFT END PLAY

(1) Mount a dial indicator to front of engine, locating probe on nose of the crankshaft (Fig. 40).

(2) Move crankshaft all the way to the rear of its travel.

(3) Zero the dial indicator.

(4) Move crankshaft all the way to the front of its travel and read the dial indicator. For crankshaft specifications (Refer to 9 - ENGINE - SPECIFICATIONS)

REMOVAL - CRANKSHAFT

(1) Remove engine assembly from vehicle (Refer to 9 - ENGINE - REMOVAL).

(2) Separate transaxle from engine.

(3) Remove drive plate/flexplate.

(4) Remove crankshaft rear oil seal (Refer to 9 - ENGINE/ENGINE BLOCK/CRANKSHAFT OIL SEAL - REAR - REMOVAL).

(5) Mount engine on a suitable repair stand.

(6) Drain engine oil.

(7) Remove crankshaft vibration damper (Refer to 9 - ENGINE/ENGINE BLOCK/VIBRATION DAMPER - REMOVAL).

(8) Remove front timing belt cover, front engine mount bracket, and timing belt (Refer to 9 - ENGINE/VALVE TIMING/TIMING BELT AND SPROCKETS - REMOVAL).

CRANKSHAFT (Continued)

(9) Remove the timing belt tensioner and pulley bracket (Refer to 9 - ENGINE/VALVE TIMING/TIMING BELT TENSIONER & PULLEY - REMOVAL).

(10) Remove camshaft sprockets and rear timing belt cover (Refer to 9 - ENGINE/VALVE TIMING/TIMING BELT COVER(S) - REMOVAL).

(11) Remove crankshaft sprocket (Refer to 9 - ENGINE/ENGINE BLOCK/CRANKSHAFT OIL SEAL - FRONT - REMOVAL).

(12) Remove oil filter and adapter (Fig. 41).

(13) Remove oil pan (Refer to 9 - ENGINE/LUBRICATION/OIL PAN - REMOVAL).

(14) Remove oil pump pick-up tube.

(15) Remove oil pump (Refer to 9 - ENGINE/LUBRICATION/OIL PUMP - REMOVAL).

(16) Remove crankshaft position sensor (Fig. 41).

(17) Using a permanent ink or paint marker, identify cylinder number on each connecting rod cap (Fig. 42).

CAUTION: DO NOT use a number stamp or a punch to mark connecting rods. Damage to connecting rod could occur.

(18) Remove all connecting rod bolts and caps. Care should be taken not to damage the fracture rod and cap surfaces.

NOTE: Do not reuse connecting rod bolts.

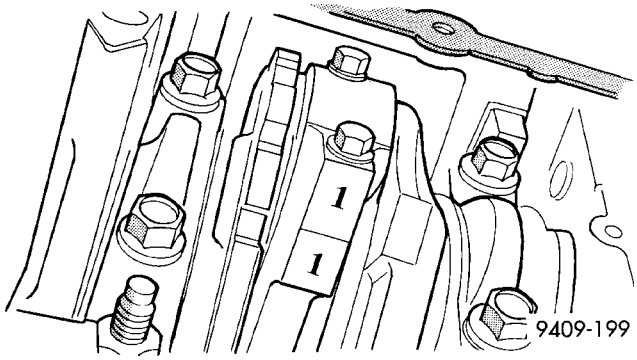

Fig. 42 Identify Connecting Rod to Cylinder

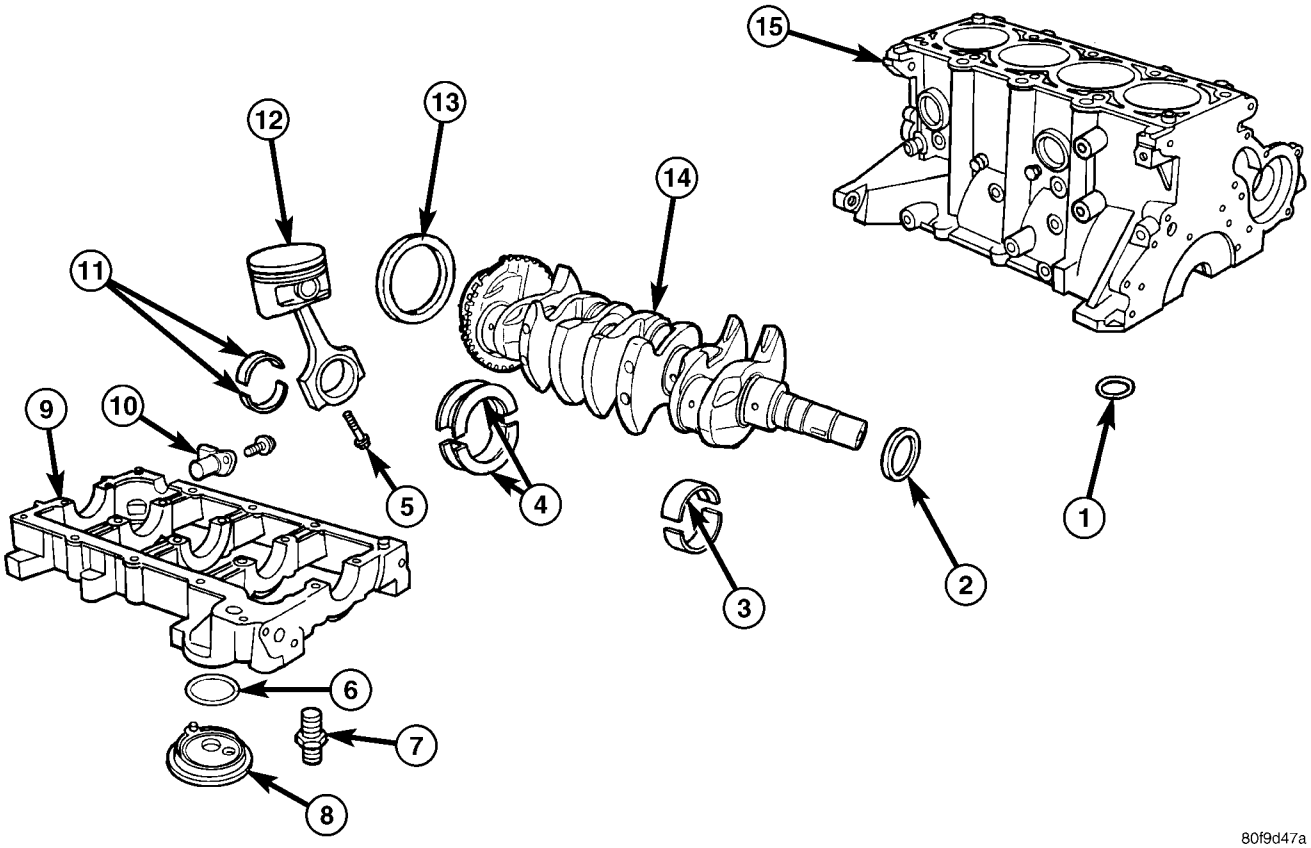

Fig. 41 Engine Block and Components

1 - OIL PASSAGE O-RING
2 - FRONT CRANKSHAFT SEAL
3 - UPPER BEARING (GROOVED)
4 - THRUST BEARINGS
5 - BOLT
6 - O-RING
7 - NIPPLE
8 - OIL FILTER ADAPTER
9 - BEDPLATE
10 - CRANKSHAFT POSITION SENSOR
11 - CONNECTING ROD BEARINGS
12 - PISTON AND CONNECTING ROD ASSEMBLY
13 - REAR CRANKSHAFT SEAL
14 - CRANKSHAFT
15 - ENGINE BLOCK

CRANKSHAFT (Continued)

(19) Remove all bedplate bolts from the engine block (Fig. 43).

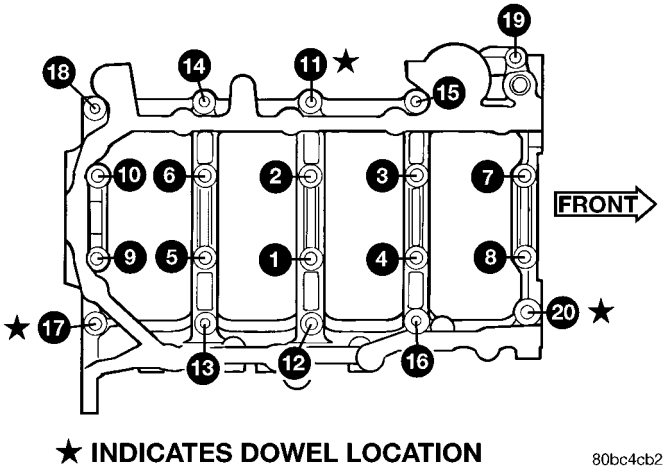

Fig. 43 Bedplate Bolts

(20) Using a mallet tap the bedplate loose from the engine block dowel pins.

CAUTION: Do not pry up on one side of the bedplate. Damage may occur to cylinder block to bedplate alignment and thrust bearing.

(21) Bedplate should be removed evenly from the cylinder block dowel pins to prevent damage to the dowel pins and thrust bearing.

CAUTION: Use extreme care when handling crankshaft. Tone wheel damage can occur if crankshaft is mis-handled.

(22) Lift out crankshaft from cylinder block. Do not damage the main bearings or journals when removing the crankshaft.

INSPECTION

The crankshaft journals should be checked for excessive wear, taper and scoring (Fig. 44). Limits of taper or out of round on any crankshaft journals should be held to 0.025 mm (0.001 in.). Journal grinding should not exceed 0.305 mm (0.012 in.) under the standard journal diameter. DO NOT grind thrust faces of No. 3 main bearing. DO NOT nick crank pin or bearing fillets. After grinding, remove rough edges from crankshaft oil holes and clean out all passages.

CAUTION: With the nodular cast iron crankshafts, it is important that the final paper or cloth polish be in the same direction as normal rotation in the engine.

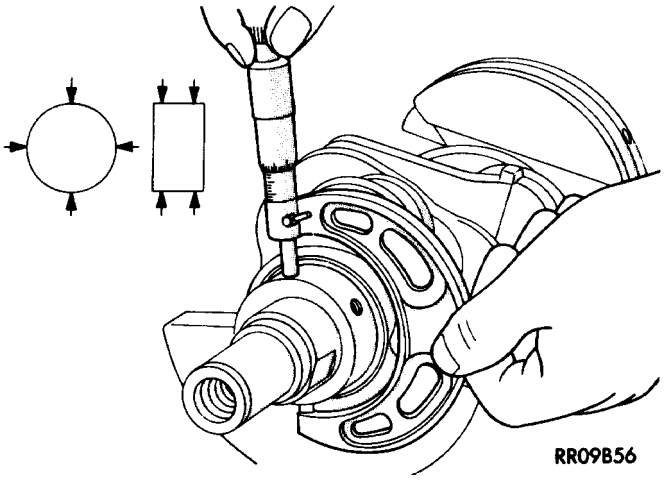

Fig. 44 Crankshaft Journal Measurements

INSTALLATION - CRANKSHAFT

CRANKSHAFT MAIN BEARING LOCATION

The crankshaft is supported in five main bearings. All upper bearing shells in the crankcase have oil grooves and holes. All lower bearing shells installed in the (bedplate) main bearing cap are plain. Crankshaft end play is controlled by a flanged bearing on the number three main bearing journal (Fig. 45).

NOTE: The upper and lower main Bearing shells are Not interchangeable. The lower shell locating tabs prevent improper installation.

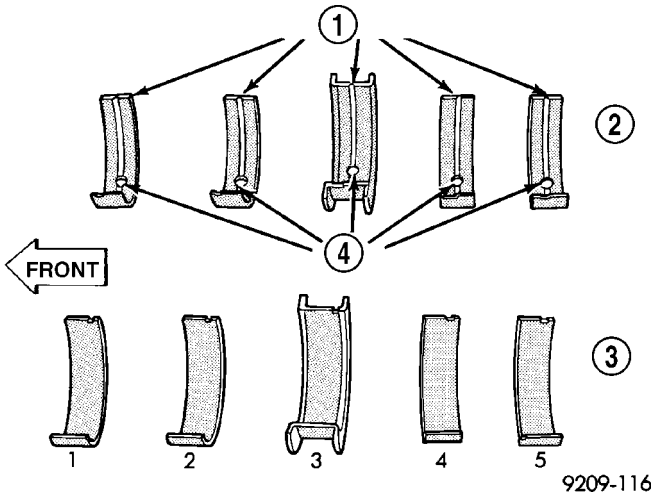

Fig. 45 Main Bearing Identification

1 - OIL GROOVES
2 - UPPER BEARINGS
3 - LOWER BEARINGS
4 - OIL HOLES

CRANKSHAFT (Continued)

(1) Install the main bearing upper shells with the lubrication groove and oil hole in the engine block. Install O-ring into recess in the block (Fig. 46).

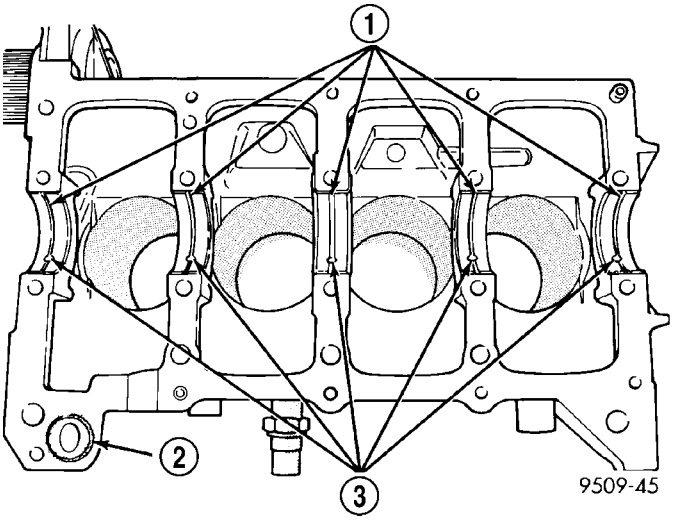

Fig. 46 Installing Main Bearing Upper Shell

1 - LUBRICATION GROOVES
2 - O-RING
3 - OIL HOLES

(2) Make certain oil holes in block line up with oil hole in bearings and bearing tabs seat in the block tab slots.

CAUTION: Use extreme care when handling crankshaft. Tone wheel damage can occur if crankshaft is mis-handled.

CAUTION: Do Not get oil on the bedplate mating surface. It will affect the sealer ability to seal the bedplate to cylinder block.

(3) Oil the bearings and journals and install crankshaft in engine block.

CAUTION: Use only the specified anaerobic sealer on the bedplate or damage may occur to the engine.

(4) Apply a 1.5 to 2.0 mm (0.059 to 0.078 in.) bead of Mopar® Bed Plate Sealant to the bed plate as shown in (Fig. 47).

(5) Install lower main bearings into main bearing cap/bedplate. Make certain the bearing tabs are seated into the bedplate slots. Install the main bearing/bedplate into engine block.

(6) Before installing the bolts oil threads with clean engine oil, wipe off any excess oil.

(7) Install main bearing bedplate to engine block bolts 11, 17 and 20 finger tight. Tighten these bolts down together until the bedplate contacts the cylinder block (Fig. 48).

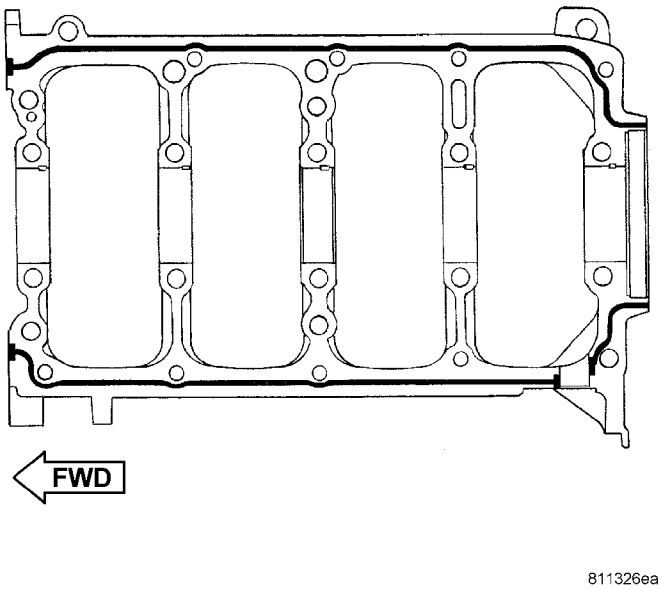

Fig. 47 BEDPLATE SEALING

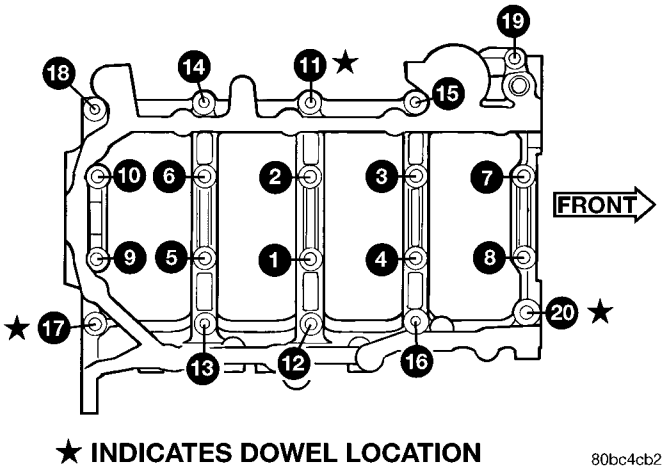

Fig. 48 Main Bearing Caps/Bedplate Torque Sequence

(8) To ensure correct thrust bearing alignment, perform the following steps:

- Step 1: Rotate crankshaft until number 4 piston is at TDC.
- Step 2: Move crankshaft rearward to limits of travel.
- Step 3: Then, move crankshaft forward to limits of travel.
- Step 4: Wedge an appropriate tool between the rear of the cylinder block **(NOT BED PLATE)** and the rear crankshaft counterweight. This will hold the crankshaft in it's furthest forward position.
- Step 5: Install and tighten bolts (1–10) in sequence shown in (Fig. 48) to 41 N·m (30 ft. lbs.).
- Step 6: Remove wedge tool used to hold crankshaft.

(9) Tighten bolts (1–10) again to 41 N·m (30 ft. lbs.) in sequence shown in (Fig. 48).

(10) Install main bearing bedplate to engine block bolts (11–20), with baffle studs in positions 12, 13

CRANKSHAFT (Continued)

and 16 and torque each bolt to 34 N·m (25 ft. lbs.) in sequence shown in (Fig. 48).

(11) Tighten bolts (1–10) to 81 N·m (60 ft. lbs.) in sequence shown in (Fig. 48).

(12) Tighten bolts (11–20) again to 34 N·m (25 ft. lbs.) in sequence shown in (Fig. 48).

(13) After the main bearing bedplate is installed, check the crankshaft turning torque. The turning torque should not exceed 5.6 N·m (50 in. lbs.).

(14) Check crankshaft end play (Refer to 9 - ENGINE/ENGINE BLOCK/CRANKSHAFT - STANDARD PROCEDURE).

NOTE: The connecting rod cap bolts should not be reused.

(15) Before installing **NEW** bolts, lubricate the threads with clean engine oil.

(16) Install each bolt finger tight then alternately torque each bolt to assemble the cap properly.

(17) Tighten the connecting rod bolts using the 2 step torque-turn method. Tighten according to the following values:

CAUTION: Do not use a torque wrench for the second step.

1. Tighten the bolts to 27 N·m (20 ft. lbs.).
2. Tighten the connecting rod bolts an additional **1/4 TURN.**

(18) Install oil pump (Refer to 9 - ENGINE/LUBRICATION/OIL PUMP - INSTALLATION).

(19) Install oil pump pick-up tube. Torque fastener to 23 N·m (200 in. lbs.).

(20) Install the oil pan (Refer to 9 - ENGINE/LUBRICATION/OIL PAN - INSTALLATION).

(21) Install oil filter adapter and oil filter (Fig. 41) (Refer to 9 - ENGINE/LUBRICATION/OIL FILTER ADAPTER - INSTALLATION).

(22) Install rear timing belt cover and camshaft sprockets (Refer to 9 - ENGINE/VALVE TIMING/TIMING BELT COVER(S) - INSTALLATION).

(23) Install front crankshaft oil seal and crankshaft sprocket (Refer to 9 - ENGINE/ENGINE BLOCK/CRANKSHAFT OIL SEAL - FRONT - INSTALLATION).

(24) Install the timing belt tensioner and pulley bracket (Refer to 9 - ENGINE/VALVE TIMING/TIMING BELT TENSIONER & PULLEY - INSTALLATION).

(25) Install the timing belt, front engine mount bracket, and front timing belt cover (Refer to 9 - ENGINE/VALVE TIMING/TIMING BELT AND SPROCKETS - INSTALLATION).

(26) Install crankshaft vibration damper (Refer to 9 - ENGINE/ENGINE BLOCK/VIBRATION DAMPER - INSTALLATION).

(27) Install crankshaft position sensor (Fig. 41).

(28) Install **NEW** oil filter.

(29) Remove engine from repair stand and position on Special Tools 6135 and 6710 Engine Dolly and Cradle. Install safety straps around the engine to cradle and tighten and lock them into position.

(30) Install the crankshaft rear oil seal (Refer to 9 - ENGINE/ENGINE BLOCK/CRANKSHAFT OIL SEAL - REAR - INSTALLATION).

(31) Install drive plate/flex plate. Apply Mopar® Lock & Seal Adhesive to bolt threads and tighten to 95 N·m (70 ft. lbs.).

(32) Attach transaxle to engine. Tighten attaching bolts to 101 N·m (75 ft. lbs.).

(33) Install the engine assembly (Refer to 9 - ENGINE - INSTALLATION).

CRANKSHAFT OIL SEAL - FRONT

REMOVAL

(1) Remove the accessory drive belts. (Refer to 7 - COOLING/ACCESSORY DRIVE/DRIVE BELTS - REMOVAL)

(2) Remove the crankshaft vibration damper. (Refer to 9 - ENGINE/ENGINE BLOCK/VIBRATION DAMPER - REMOVAL)

(3) Remove the timing belt. (Refer to 9 - ENGINE/VALVE TIMING/TIMING BELT/CHAIN AND SPROCKETS - REMOVAL)

(4) Remove the crankshaft sprocket using Special Tool 6793 and insert C-4685-C2 (Fig. 49).

(5) Remove the crankshaft sprocket key from crankshaft (Fig. 50).

CAUTION: Do not nick shaft seal surface or seal bore.

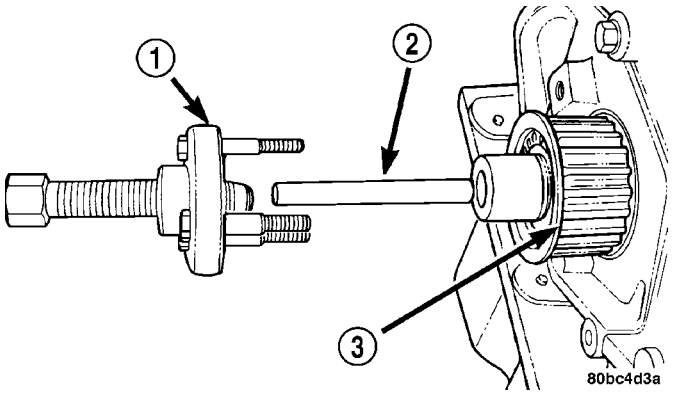

Fig. 49 Crankshaft Sprocket—Removal

1 - SPECIAL TOOL 6793
2 - SPECIAL TOOL C-4685–C2
3 - CRANKSHAFT SPROCKET

CRANKSHAFT OIL SEAL - FRONT (Continued)

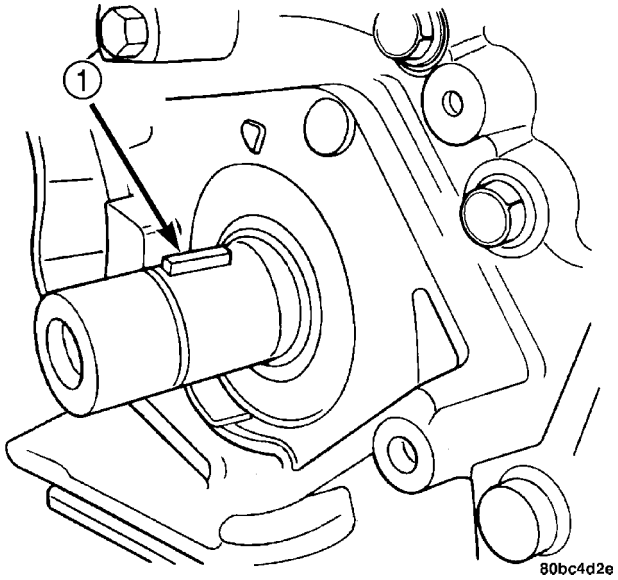

Fig. 50 Crankshaft Key

1 - CRANKSHAFT KEY

(6) Using Special Tool 6771, remove front crankshaft oil seal (Fig. 51). Do not damage the seal contact area on the crankshaft.

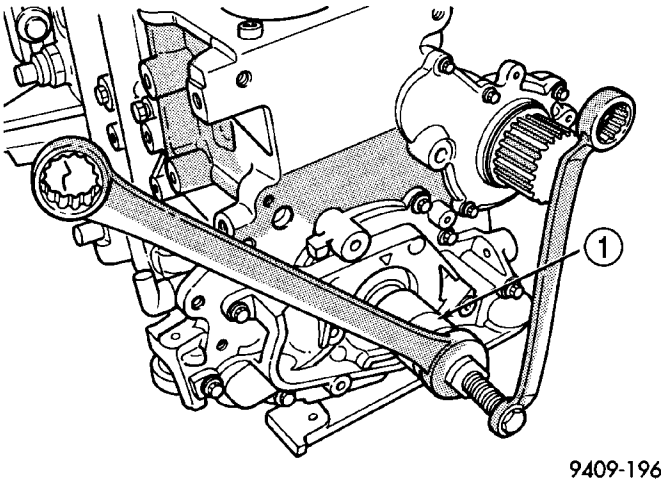

Fig. 51 Front Crankshaft Oil Seal—Removal

1 - SPECIAL TOOL 6771

INSTALLATION

(1) Position seal into opening with seal spring towards the inside of engine. Using Special Tool 6780-1 (Fig. 52), install seal until flush with cover.

(2) Install the crankshaft sprocket key (Fig. 50).

(3) Install the crankshaft sprocket (Fig. 53) using Special Tool 6792.

NOTE: Make sure the word "front" on the sprocket is facing outward.

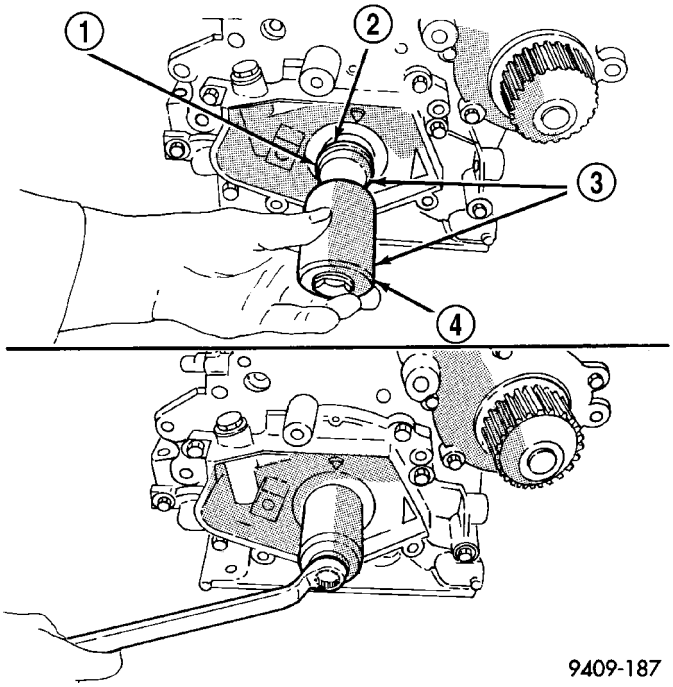

Fig. 52 Front Crankshaft Oil Seal - Installation

1 - PROTECTOR
2 - SEAL
3 - SPECIAL TOOL 6780–1
4 - INSTALLER

CAUTION: Use of Special Tool 6792 is required to install the crankshaft sprocket to the proper depth. Failure to use this tool will cause improper timing belt tracking.

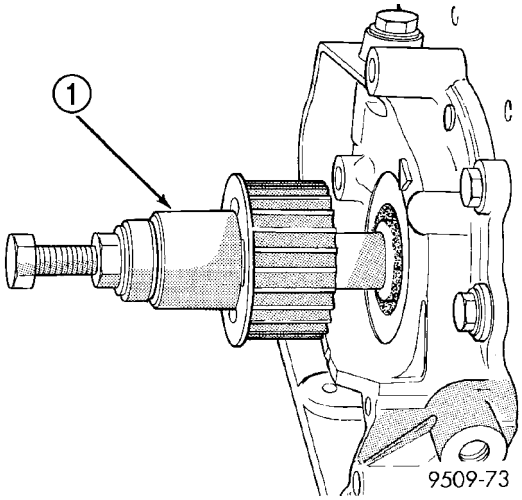

Fig. 53 Crankshaft Sprocket - Installation

1 - SPECIAL TOOL 6792

(4) Install the timing belt. (Refer to 9 - ENGINE/VALVE TIMING/TIMING BELT/CHAIN AND SPROCKETS - INSTALLATION)

CRANKSHAFT OIL SEAL - FRONT (Continued)

(5) Install crankshaft vibration damper. (Refer to 9 - ENGINE/ENGINE BLOCK/VIBRATION DAMPER - INSTALLATION)

(6) Install accessory drive belts. (Refer to 7 - COOLING/ACCESSORY DRIVE/DRIVE BELTS - INSTALLATION)

CRANKSHAFT OIL SEAL - REAR

REMOVAL

(1) Remove the transaxle. (Refer to 21 - TRANSAXLE - REMOVAL) for procedure.

(2) Remove the flex plate. (Refer to 9 - ENGINE/ENGINE BLOCK/FLEX PLATE - REMOVAL)

(3) Insert a 3/16 flat bladed screwdriver between the dust lip and the metal case of the crankshaft seal. Angle the screwdriver (Fig. 54)through the dust lip against metal case of the seal. Pry out seal.

CAUTION: Do not permit the screwdriver blade to contact crankshaft seal surface. Contact of the screwdriver blade against crankshaft edge (chamfer) is permitted.

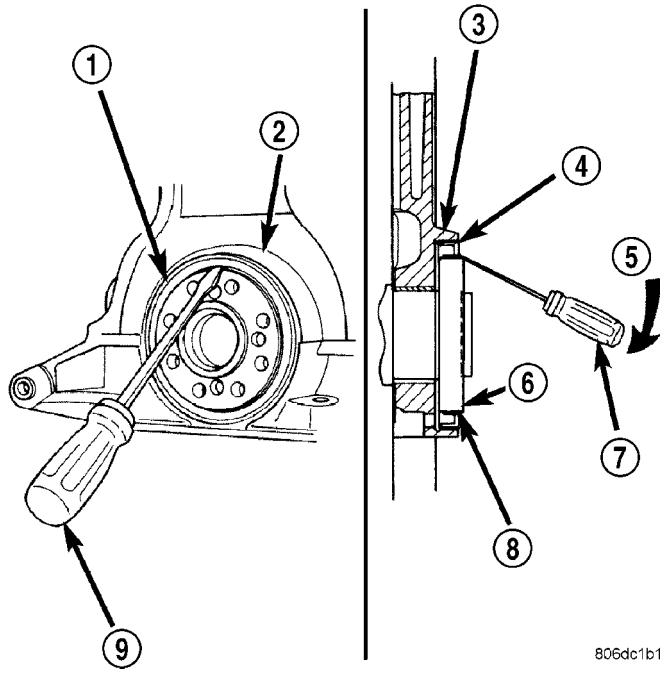

Fig. 54 Rear Crankshaft Oil Seal—Removal

1 - REAR CRANKSHAFT SEAL
2 - ENGINE BLOCK
3 - ENGINE BLOCK
4 - REAR CRANKSHAFT SEAL METAL CASE
5 - PRY IN THIS DIRECTION
6 - CRANKSHAFT
7 - SCREWDRIVER
8 - REAR CRANKSHAFT SEAL DUST LIP
9 - SCREWDRIVER

INSTALLATION

CAUTION: If burr or scratch is present on the crankshaft edge (chamfer), cleanup with 400 grit sand paper to prevent seal damage during installation of new seal.

NOTE: When installing seal, no lube on seal is needed.

(1) Place Special Tool 6926-1 on crankshaft. This is a pilot tool with a magnetic base (Fig. 55).

(2) Position seal over pilot tool. Make sure you can read the words **THIS SIDE OUT** on seal (Fig. 55). Pilot tool should remain on crankshaft during installation of seal. Ensure that the lip of the seal is facing towards the crankcase during installation.

CAUTION: If the seal is driven into the block past flush, this may cause an oil leak.

(3) Drive the seal into the block using Special Tool 6926-2 and handle C-4171 (Fig. 56) until the tool bottoms out against the block (Fig. 57).

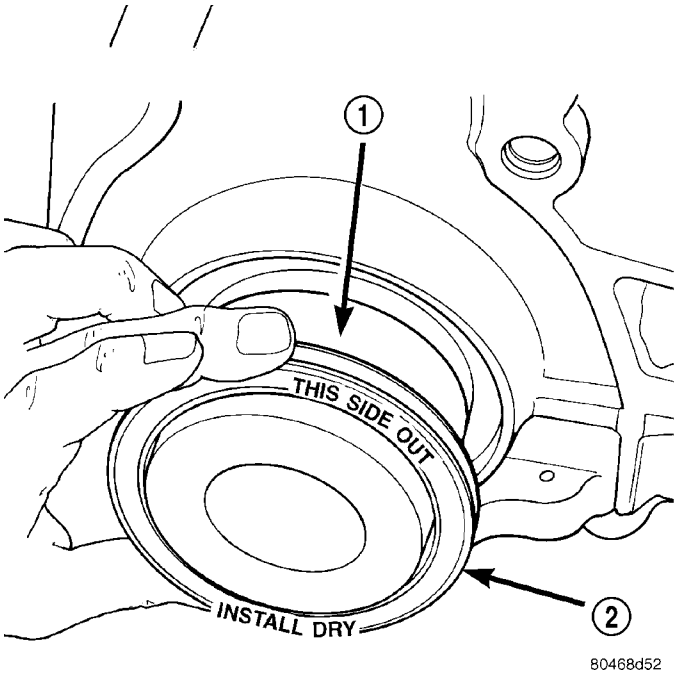

Fig. 55 Crankshaft Rear Seal and Special Tool 6926-1

1 - SPECIAL TOOL 6926–1 PILOT
2 - SEAL

CRANKSHAFT OIL SEAL - REAR (Continued)

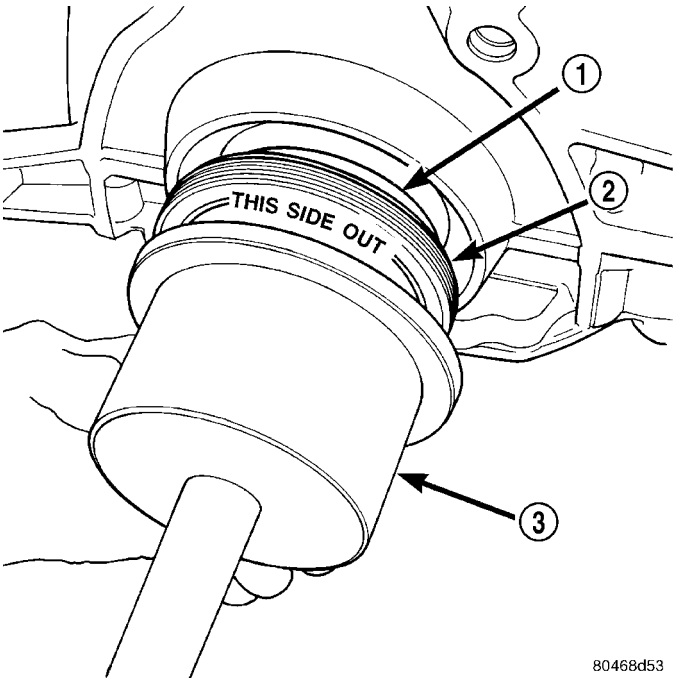

Fig. 56 Crankshaft Seal Special Tool 6926-2

1 - SPECIAL TOOL 6926–1 PILOT
2 - SEAL
3 - SPECIAL TOOL 6926–2 INSTALLER

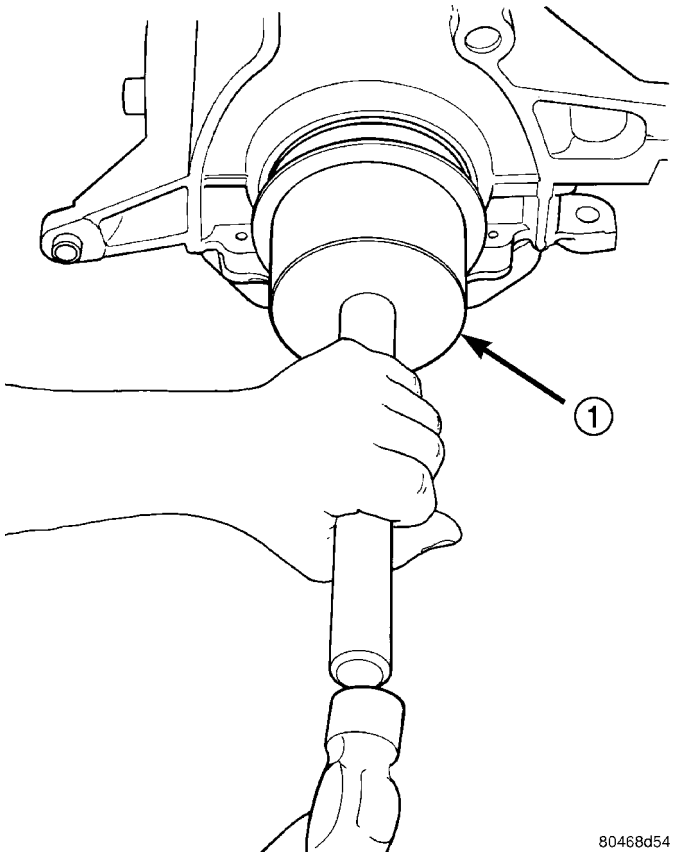

Fig. 57 Crankshaft Rear Oil Seal - Installation

1 - SPECIAL TOOL 6926–2 INSTALLER

(4) Install the flex plate. (Refer to 9 - ENGINE/ENGINE BLOCK/FLEX PLATE - INSTALLATION)

(5) Install the transaxle. (Refer to 21 - TRANSAXLE - INSTALLATION)

PISTON & CONNECTING ROD

DESCRIPTION

NOTE: The engine DOES NOT have provisions for a free wheeling valve train. Non free wheeling valve train means, in the event of a broken timing belt, pistons will contact the valves.

The pistons are made of a cast aluminum alloy. The pistons have pressed-in pins attached to forged powdered metal connecting rods. The pistons pin is offset 1 mm (0.0394 in.) towards the thrust side of the piston. The connecting rods are a cracked cap design and are not repairable. Hex head cap screws are used to provide alignment and durability in the assembly. The pistons and connecting rods are serviced as an assembly.

STANDARD PROCEDURE - PISTON TO CYLINDER BORE FITTING

NOTE: Pistons and cylinder bores should be measured at normal room temperature, 70°F (21°C).

Piston and cylinder wall must be clean and dry. Piston diameter should be measured 90 degrees to piston pin about 14 mm (9/16 inch.) from the bottom of the skirt as shown in (Fig. 58). Cylinder bores should be measured halfway down the cylinder bore and transverse (measurement location B) to the engine crankshaft center line shown in (Fig. 59). (Refer to 9 - ENGINE - SPECIFICATIONS) Correct piston to bore clearance must be established in order to assure quiet and economical operation.

REMOVAL

(1) Remove the cylinder head (Refer to 9 - ENGINE/CYLINDER HEAD - REMOVAL).

(2) Remove the oil pan (Refer to 9 - ENGINE/LUBRICATION/OIL PAN - REMOVAL).

(3) Remove top ridge of cylinder bores with a reliable ridge reamer before removing pistons from cylinder block. **Be sure to keep tops of pistons covered during this operation**. Mark piston with matching cylinder number (Fig. 60).

CAUTION: DO NOT use a number stamp or a punch to mark connecting rods. Damage to connecting rod could occur.

PISTON & CONNECTING ROD (Continued)

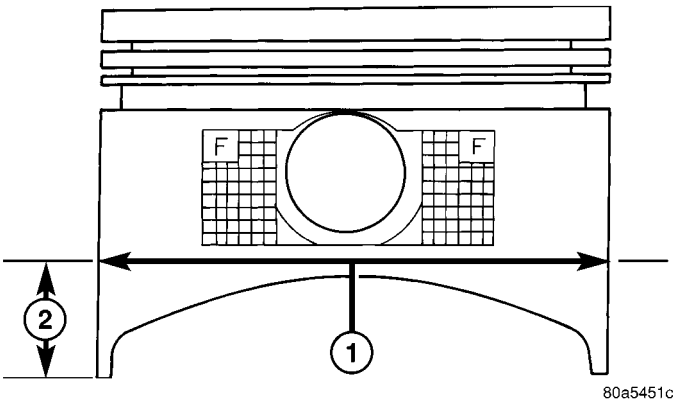

Fig. 58 PISTON MEASUREMENT LOCATION

1 - PISTON DIAMETER
2 - 14 mm (9/16 in.)

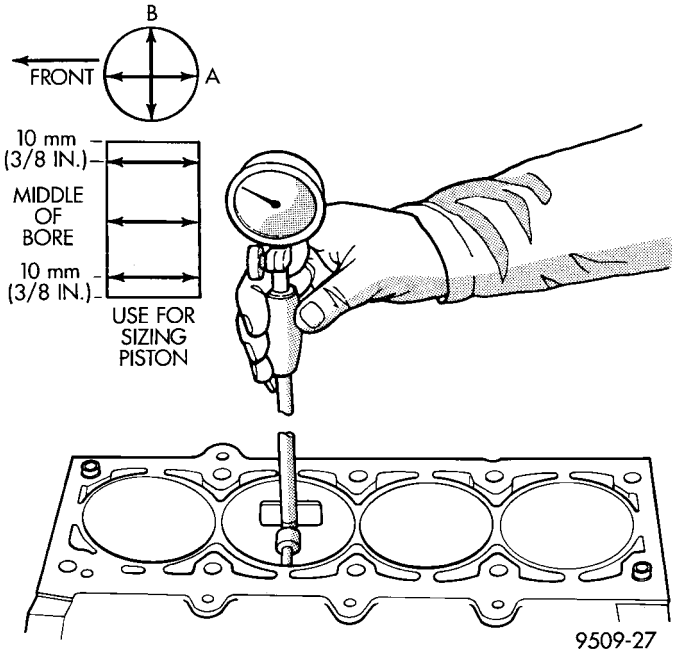

Fig. 59 Cylinder Bore Measurement

(4) Using a permanent ink or paint marker, identify cylinder number on each connecting rod cap (Fig. 61).

(5) Pistons will have a stamping in the approximate location shown in (Fig. 60). These stamps will be either a directional arrow or a weight identification for the assembly. L is for light and H is for heavy. These assemblies should all be the same weight class. Service piston assemblies are marked with a S and can be used with either L or H production assemblies. The weight designation stamps should face toward the timing belt side of the engine.

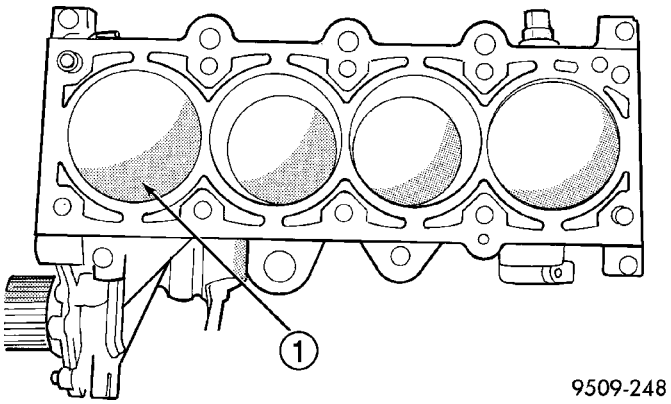

Fig. 60 Piston Markings

1 - WEIGHT DESIGNATION AND DIRECTIONAL ARROW WILL BE IMPRINTED IN THIS AREA

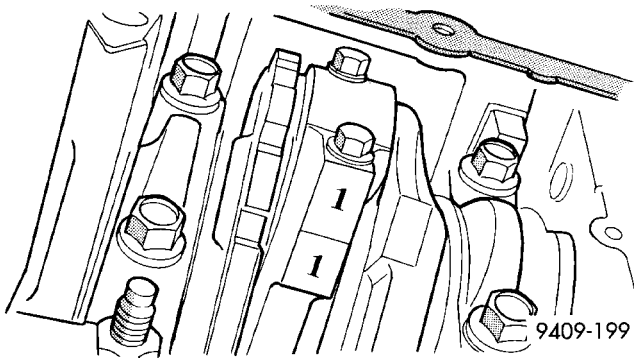

Fig. 61 Identify Connecting Rod to Cylinder

(6) Pistons and connecting rods must be removed from top of cylinder block. Rotate crankshaft so that each connecting rod is centered in cylinder bore.

(7) Remove connecting rod bolts and cap. Care should be taken not to damage the fracture rod and cap surfaces.

NOTE: Do not reuse connecting rod bolts.

CAUTION: Care must be taken not to damage the fractured rod and cap joint surfaces, as engine damage many occur.

PISTON & CONNECTING ROD (Continued)

(8) To protect crankshaft journal and fractured rod surfaces, install Special Tool 8189, connecting rod guides onto connecting rod (Fig. 62). Carefully push each piston and rod assembly out of cylinder bore.

(9) Remove Special Tool 8189, connecting rod guides and re-install bearing cap on the mating rod.

NOTE: Piston and rods are serviced as an assembly.

(10) Repeat procedure for each piston and connecting rod assembly.

(11) Remove piston rings (Refer to 9 - ENGINE/ENGINE BLOCK/PISTON RINGS - REMOVAL).

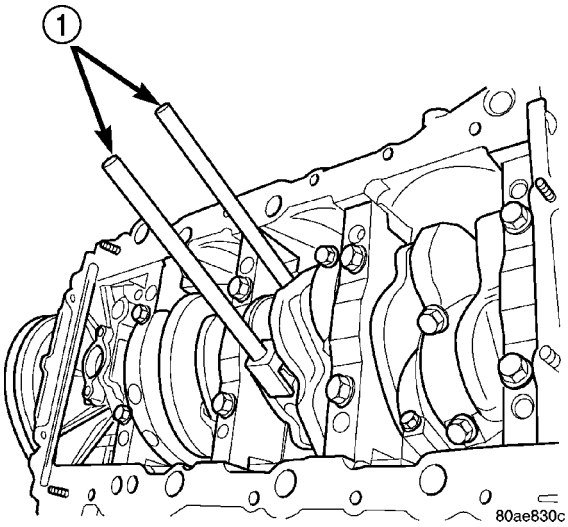

Fig. 62 Connecting Rod Guides—Typical

1 - SPECIAL TOOL 8189 CONNECTING ROD GUIDES

INSTALLATION

(1) Install piston rings on piston (Refer to 9 - ENGINE/ENGINE BLOCK/PISTON RINGS - INSTALLATION).

(2) Before installing pistons and connecting rod assemblies into the bore, ensure the compression ring gaps are staggered, and neither is in line with the oil ring rail gap (Fig. 70).

(3) Before installing the ring compressor, ensure the oil ring expander ends are butted and the rail gaps are located as shown in (Fig. 70). As viewed from top.

(4) Immerse the piston head and rings in clean engine oil, slide the ring compressor, over the piston (Fig. 63). **Be sure position of rings does not change during this operation**.

(5) The weight stamp designation L or H will be in the front half of the piston should face toward the front of the engine (Fig. 60).

(6) Rotate crankshaft so that the connecting rod journal is on the center of the cylinder bore. Lubricate connecting rod journal with clean engine oil.

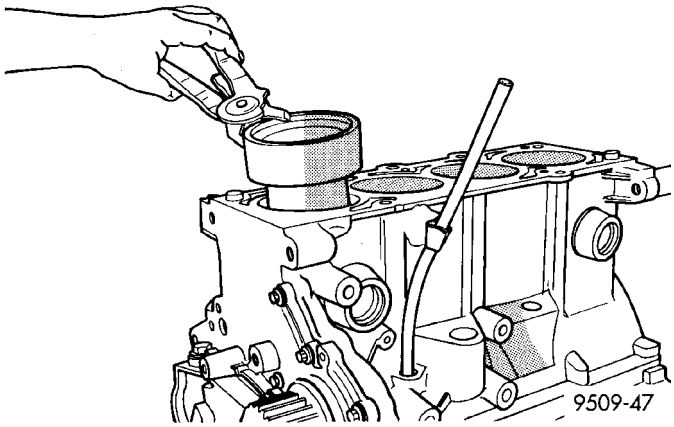

Fig. 63 Installing Piston

(7) Install connecting rod upper bearing half into connecting rod. Install Special Tool 8189, connecting rod guides onto connecting rod (Fig. 62).

(8) Insert rod and piston assembly into cylinder bore and carefully guide rod over the crankshaft journal.

(9) Tap the piston down in cylinder bore, using a hammer handle. At the same time, guide connecting rod into position on connecting rod journal.

(10) Remove Special Tool 8189, connecting rod guides.

NOTE: The connecting rod cap bolts should not be reused.

(11) Before installing the **NEW** bolts, the threads should be coated with clean engine oil.

(12) Install connecting rod lower bearing half into connecting rod cap. Install connecting rod cap.

(13) Install each bolt finger tight then alternately torque each bolt to assemble the cap properly.

(14) Tighten the connecting rod bolts using the 2 step torque-turn method. Tighten according to the following values:

CAUTION: Do not use a torque wrench for the second step.

1. Tighten the bolts to 27 N·m (20 ft. lbs.).
2. Tighten the connecting rod bolts an additional **1/4 TURN.**

(15) Using a feeler gauge, check connecting rod side clearance (Fig. 64). (Refer to 9 - ENGINE - SPECIFICATIONS) for connecting rod side clearance.

(16) Install the cylinder head (Refer to 9 - ENGINE/CYLINDER HEAD - INSTALLATION).

(17) Install the oil pan (Refer to 9 - ENGINE/LUBRICATION/OIL PAN - INSTALLATION).

CONNECTING ROD BEARINGS

STANDARD PROCEDURE

CONNECTING ROD - FITTING

(1) For measuring connecting rod bearing clearance procedure and use of Plastigage(Refer to 9 - ENGINE - STANDARD PROCEDURE). For bearing clearance refer to Engine Specifications. (Refer to 9 - ENGINE - SPECIFICATIONS)

NOTE: The rod bearing bolts should not be reused.

(2) Before installing the **NEW** bolts the threads should be oiled with clean engine oil.

(3) Install each bolt finger tight then alternately torque each bolt to assemble the cap properly.

(4) Tighten the connecting rod bolts using the 2 step torque-turn method. Tighten according to the following values:

CAUTION: Do not use a torque wrench for the second step.

1. Tighten the bolts to 27 N·m (20 ft. lbs.).
2. Tighten the connecting rod bolts an additional **1/4 TURN.**

(5) Using a feeler gauge, check connecting rod side clearance (Fig. 64). Refer to clearance specifications (Refer to 9 - ENGINE - SPECIFICATIONS).

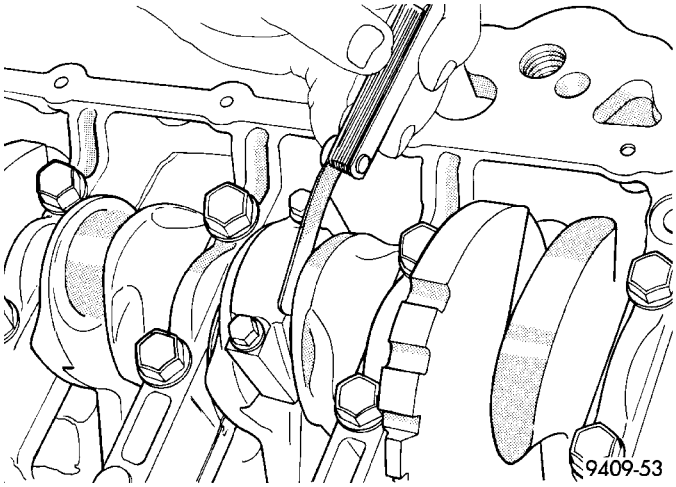

Fig. 64 Connecting Rod Side Clearance

PISTON RINGS

STANDARD PROCEDURE - PISTON RING - FITTING

(1) Wipe cylinder bore clean. Insert ring and push down with piston to ensure it is square in bore. The ring gap measurement must be made with the ring positioned below normal ring travel in the cylinder bore. Check gap with feeler gauge (Fig. 65). For piston ring specifications (Refer to 9 - ENGINE - SPECIFICATIONS).

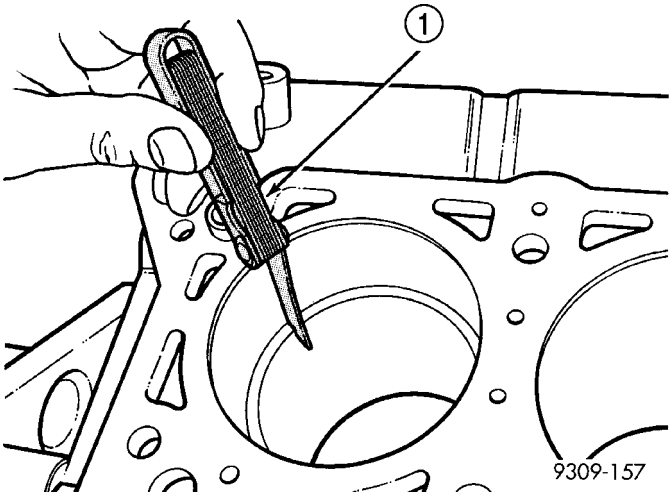

Fig. 65 Piston Ring Gap

1 - FEELER GAUGE

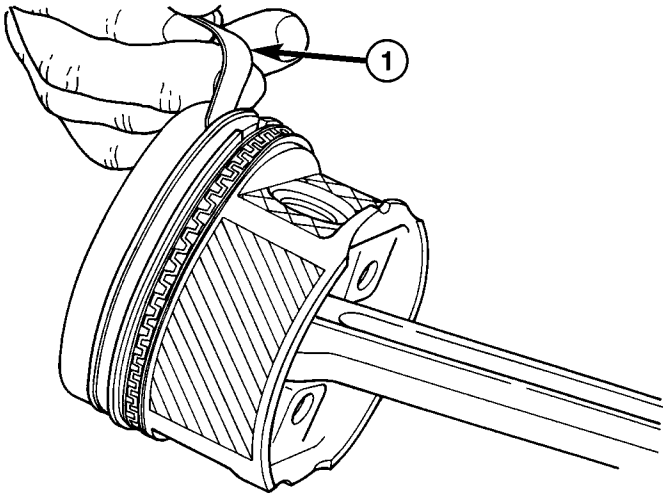

Fig. 66 Piston Ring Side Clearance

1 - FEELER GAUGE

(2) Check piston ring to groove side clearance (Fig. 66). For piston ring specifications (Refer to 9 - ENGINE - SPECIFICATIONS).

PISTON RINGS (Continued)

REMOVAL

(1) Using a suitable ring expander, remove upper and intermediate piston rings (Fig. 67).

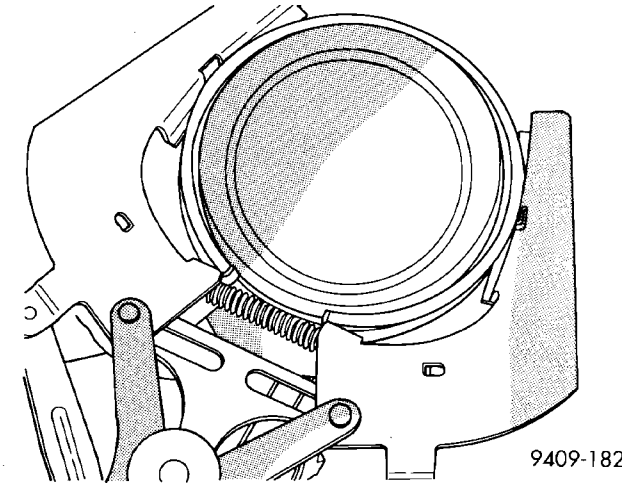

Fig. 67 Piston Rings—Removing and Installing

(2) Remove the upper oil ring side rail, lower oil ring side rail and then oil ring expander from piston.

(3) Clean ring grooves of any carbon deposits.

INSTALLATION

NOTE: The identification mark on face of upper and intermediate piston rings must point toward top of piston.

Install rings with manufacturers identification mark facing up, to the top of the piston (Fig. 68).

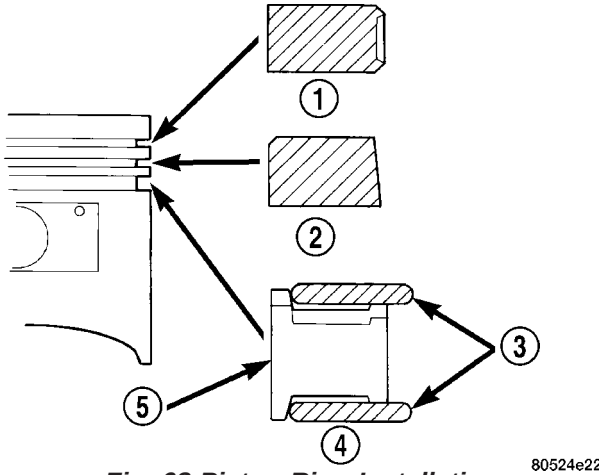

Fig. 68 Piston Ring Installation

1 - NO. 1 PISTON RING
2 - NO. 2 PISTON RING
3 - SIDE RAIL
4 - OIL RING
5 - SPACER EXPANDER

CAUTION: Install piston rings in the following order:

1. Oil ring expander.
2. Upper oil ring side rail.
3. Lower oil ring side rail.
4. No. 2 Intermediate piston ring.
5. No. 1 Upper piston ring.

(1) Install oil ring expander (Fig. 68).

(2) Install upper side rail first and then the lower side rail. Install the side rails by placing one end between the piston ring groove and the oil ring expander. Hold end firmly and press down the portion to be installed until side rail is in position. **Do not use a piston ring expander (Fig. 69).**

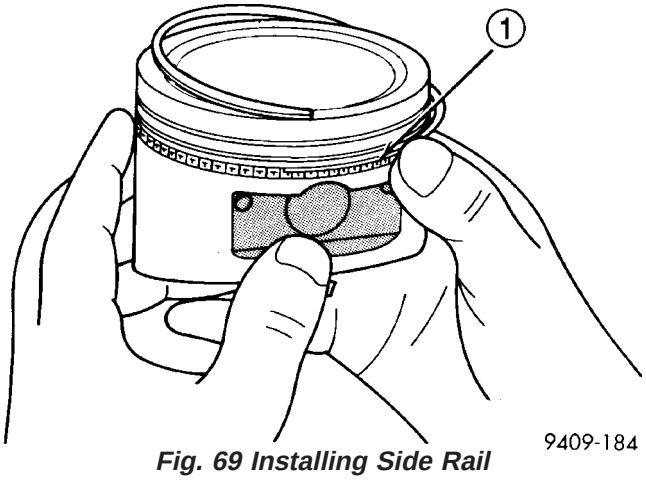

Fig. 69 Installing Side Rail

1 - SIDE RAIL END

(3) Install No. 2 piston ring and then No. 1 piston ring (Fig. 68).

(4) Position piston ring end gaps as shown in (Fig. 70).

(5) Position oil ring expander gap at least 45° from the side rail gaps but **not** on the piston pin center or on the thrust direction. Staggering ring gap is important for oil control.

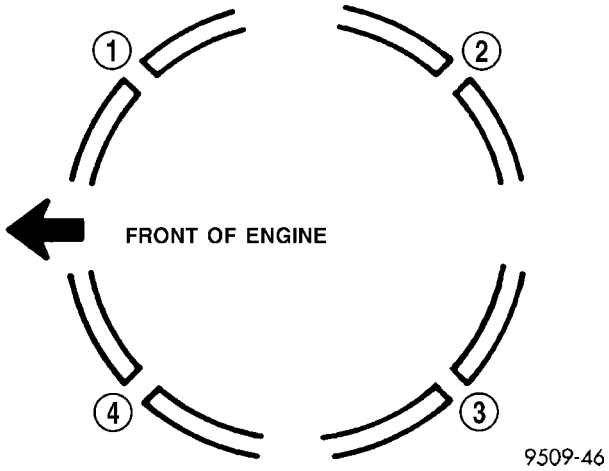

Fig. 70 Piston Ring End Gap Position

1 - GAP OF LOWER SIDE RAIL
2 - NO. 1 RING GAP
3 - GAP OF UPPER SIDE RAIL
4 - NO. 2 RING GAP AND SPACER EXPANDER GAP

STRUCTURAL COLLAR

REMOVAL

(1) Raise vehicle on hoist.

NOTE: To remove transaxle dust cover, the front bending strut must be removed.

(2) Remove structural collar from oil pan to transaxle (Fig. 71).

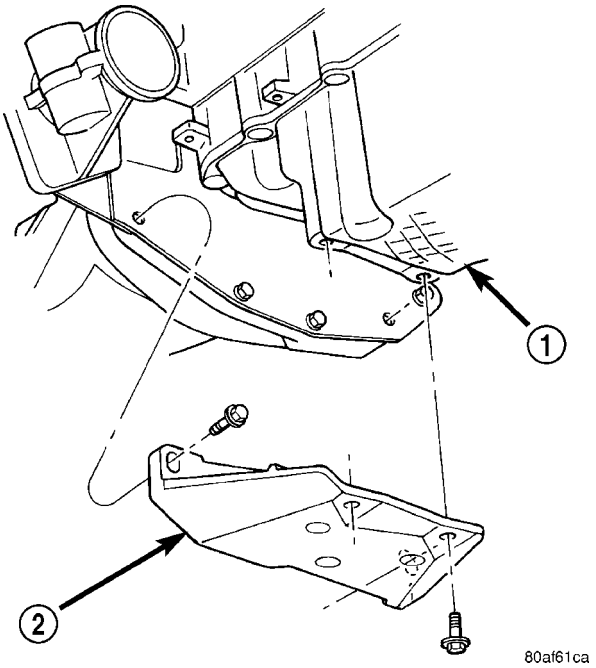

Fig. 71 Structural Collar - Removal/Installation

1 - OIL PAN
2 - STRUCTURAL COLLAR

INSTALLATION

CAUTION: The torque procedure for the structural collar must be followed, as damage to oil pan or collar could occur.

(1) Install the structural collar (Fig. 71) using the following 3 step torque sequence:

- Step 1: Install the collar to oil pan bolts and tighten to 3 N·m (30 in. lbs.).
- Step 2: Install collar to transaxle bolts and tighten to 108 N·m (80 ft. lbs.).
- Step 3: Final torque the collar to oil pan bolts to 54 N·m (40 ft. lbs.).

(2) Lower vehicle.

VIBRATION DAMPER

REMOVAL

(1) Disconnect negative battery cable.

(2) Support engine under oil pan with wooden block and floor jack.

(3) Remove three right side engine mount vertical bolts to front engine bracket.

(4) Raise vehicle on hoist.

(5) Remove right front wheel and belt splash shield.

(6) Support engine under oil pan with a wooden block and screw jack (Fig. 72).

(7) Remove front and rear engine mount through bolts.

(8) Slowly lower engine down with screw jack.

(9) Remove accessory drive belts (Refer to 7 - COOLING/ACCESSORY DRIVE/DRIVE BELTS - REMOVAL).

(10) Remove crankshaft damper bolt.

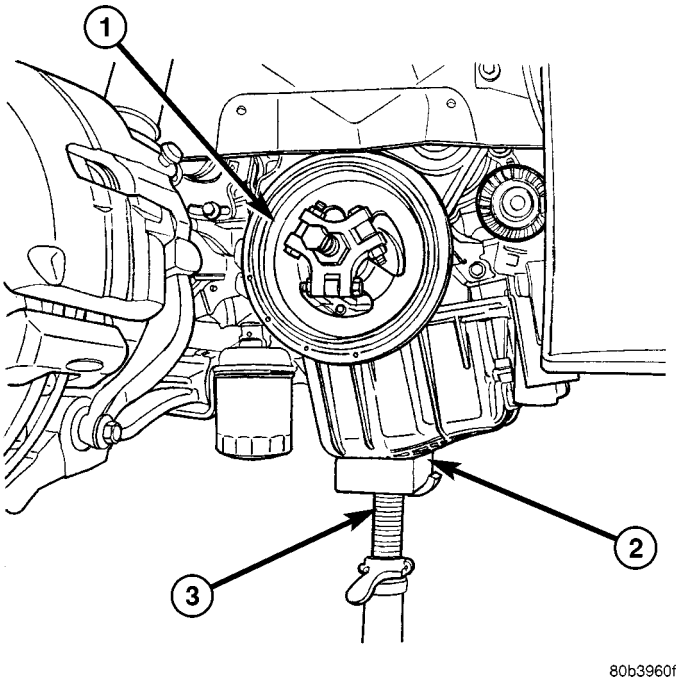

Fig. 72 Vibration Damper - Removal

1 - VIBRATION DAMPER
2 - WOODEN BLOCK
3 - SCREW JACK

VIBRATION DAMPER (Continued)

(11) Remove damper using Special Tool 8454 Puller and Insert 6827–A (Fig. 73).

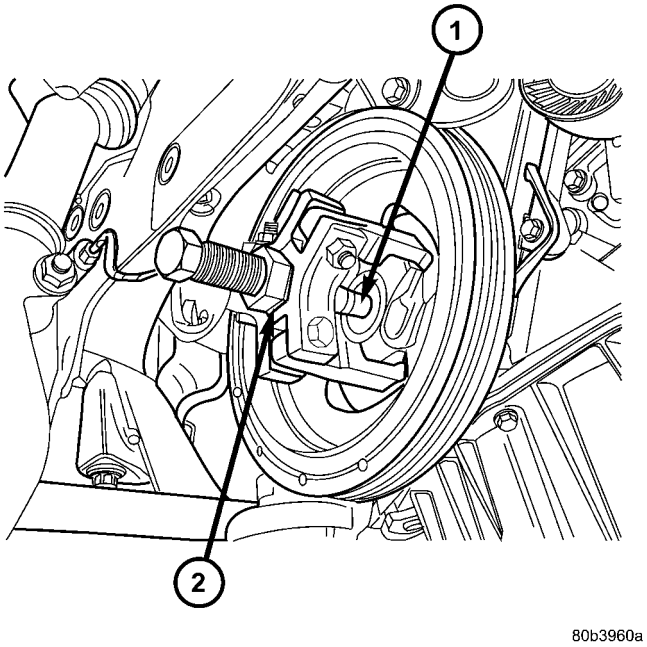

Fig. 73 Vibration Damper - Removal

1 - SPECIAL TOOL 6827-A INSERT
2 - SPECIAL TOOL 8454 PULLER

INSTALLATION

(1) Install crankshaft vibration damper using M12 1.75 x 150 mm bolt, washer, thrust bearing and nut from Special Tool 6792 (Fig. 74).

(2) Install crankshaft vibration damper bolt and tighten to 136 N·m (100 ft. lbs.).

(3) Install accessory drive belts (Refer to 7 - COOLING/ACCESSORY DRIVE/DRIVE BELTS - INSTALLATION).

(4) Raise engine with screw jack enough to install front and rear engine mount through bolts. Torque fasteners to 61 N·m (45 ft. lbs.).

(5) Install belt splash shield and right front wheel.

(6) Lower vehicle.

(7) Support engine under oil pan with wooden block and floor jack.

(8) Slowly raise engine with floor jack until engine mount bracket aligns with right side engine mount. Install three vertical bolts to front engine bracket. Torque fasteners to 61 N·m (45 ft. lbs.).

(9) Remove floor jack.

(10) Connect negative battery cable.

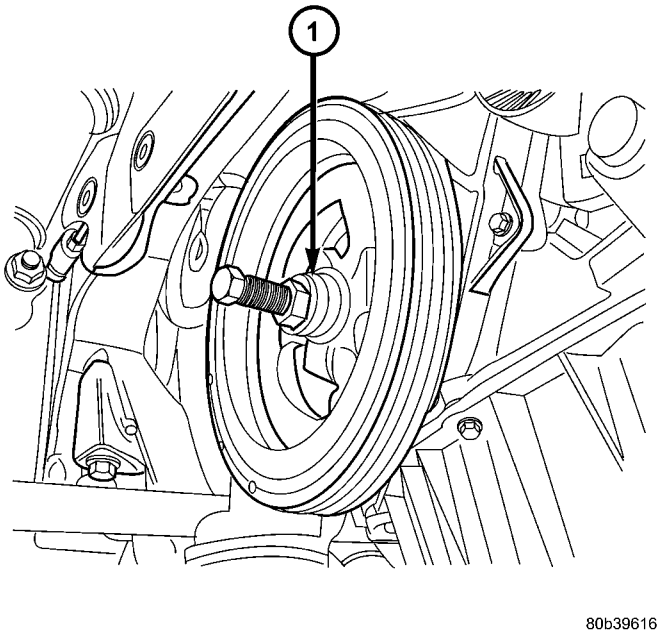

Fig. 74 Vibration Damper - Installation

1 - M12–1.75 × 150 MM BOLT, WASHER AND THRUST BEARING FROM SPECIAL TOOL 6792

ENGINE MOUNTING

ADJUSTMENTS

ENGINE SUPPORT ADJUSTMENT

The right and left support assemblies are slotted to allow for right/left drive train adjustment in relation to drive shaft assembly length.

Check and reposition right and left engine support assemblies as required. Adjust drive train position, if required, for the following conditions:

- Drive shaft distress: See Group 2, Suspension and Driveshaft.
- Any front end structural damage (after repair).
- Support Assembly replacement.

ENGINE SUPPORT ADJUSTMENT

(1) Remove the load on the engine motor mounts by carefully supporting the engine and transmission assembly with a floor jack.

(2) Loosen the right engine support assembly vertical fasteners.

(3) Loosen the left engine support assembly vertical bolts.

(4) Pry the engine right or left as required to achieve the proper drive shaft assembly length. Refer to Group 2, Suspension and Driveshaft for driveshaft identification and related assembly length measuring.

ENGINE MOUNTING (Continued)

(5) Tighten right engine support assembly vertical bolts to 61 N·m (45 ft. lbs.). and tighten left engine support assembly bolts to 61 N·m (45 ft. lbs.).

(6) Recheck drive shaft length.

LEFT MOUNT

REMOVAL

(1) Disconnect negative battery cable.

(2) Remove throttle body air inlet hose and air cleaner housing assembly.

(3) Remove two nuts securing speed control servo bracket to left shock tower. Reposition servo.

(4) Support transmission with floor jack and wooden block.

(5) Remove the three vertical bolts from mount to transmission bracket (A) (Fig. 75).

(6) Slightly lower transmission with floor jack.

(7) Remove mount to frame rail fasteners (B) and remove mount (Fig. 75).

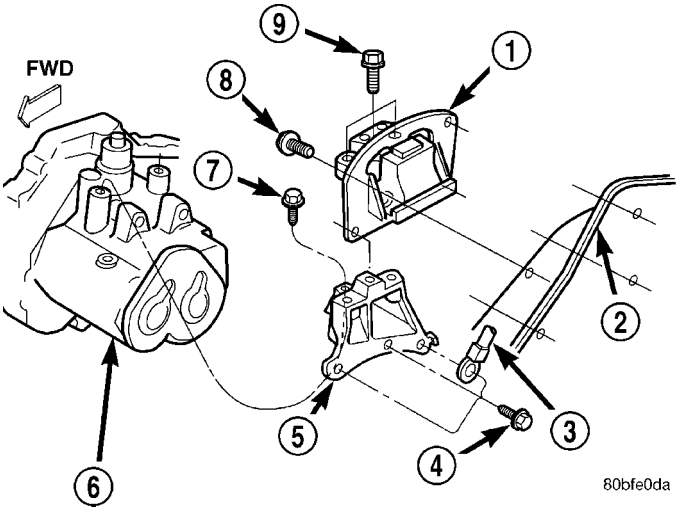

Fig. 75 Left Side Mount - Typical

1 - TRANSMISSION SUPPORT ASSEMBLY
2 - LEFT FRAME RAIL
3 - GROUND CABLE
4 - BOLT (D)
5 - TRANSMISSION BRACKET
6 - TRANSMISSION
7 - BOLT (C)
8 - BOLT (B)
9 - BOLT (A)

INSTALLATION

(1) Position mount to frame rail. Install mount to frame rail fasteners (B) (Fig. 75). Torque fasteners to 33 N·m (24 ft. lbs.).

(2) Raise transmission into position with floor jack.

(3) Install three vertical bolts from mount to transmission bracket (A) (Fig. 75). Torque fasteners to 61 N·m (45 ft. lbs.).

(4) Remove floor jack and wooden block.

(5) Install speed control servo to left shock tower. Torque fasteners to 6.7 N·m (60 in. lbs.)

(6) Install throttle body air inlet hose and air cleaner housing assembly.

(7) Connect negative battery cable.

RIGHT MOUNT

REMOVAL

(1) Remove coolant recovery container (Refer to 7 - COOLING/ENGINE/COOLANT RECOVERY CONTAINER - REMOVAL).

(2) Remove heater tube front attaching screw.

(3) Raise vehicle on a hoist and remove inner splash shield.

(4) Remove heater tube rear attaching screw.

(5) Remove the right engine support assembly vertical fasteners from frame rail (Fig. 76).

(6) Lower vehicle. Remove the load on the engine motor mounts by carefully supporting the engine assembly with floor jack and wooden block on oil pan.

(7) Remove the bolts attaching the engine support assembly to the engine bracket (Fig. 76).

(8) Remove right engine mount.

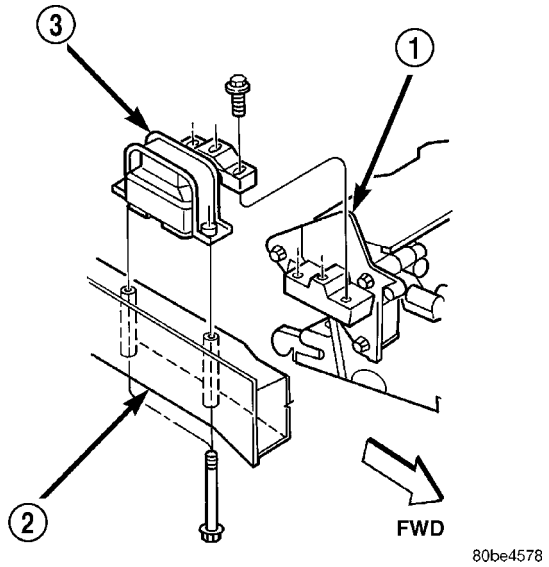

Fig. 76 Engine Mounting—Right Side

1 - ENGINE SUPPORT BRACKET
2 - FRAME RAIL
3 - RIGHT ENGINE MOUNT

INSTALLATION

(1) Position right engine mount and install frame rail to mount bolts. Tighten bolts to 61 N·m (45 ft. lbs.) (Fig. 76).

(2) Install the mount to engine support bracket bolts and tighten to 61 N·m (45 ft. lbs.) (Fig. 76).

(3) Raise vehicle on a hoist.

RIGHT MOUNT (Continued)

(4) Install heater tube rear attaching screw.
(5) Install inner splash shield and lower vehicle.
(6) Install heater tube front attaching screw.
(7) Install coolant recovery container (Refer to 7 - COOLING/ENGINE/COOLANT RECOVERY CONTAINER - INSTALLATION).

FRONT MOUNT

REMOVAL

(1) Raise vehicle.
(2) Remove front mount to bracket horizontal through bolt (Fig. 77).
(3) Remove front mount vertical bolts (Fig. 77).
(4) Remove front mount.

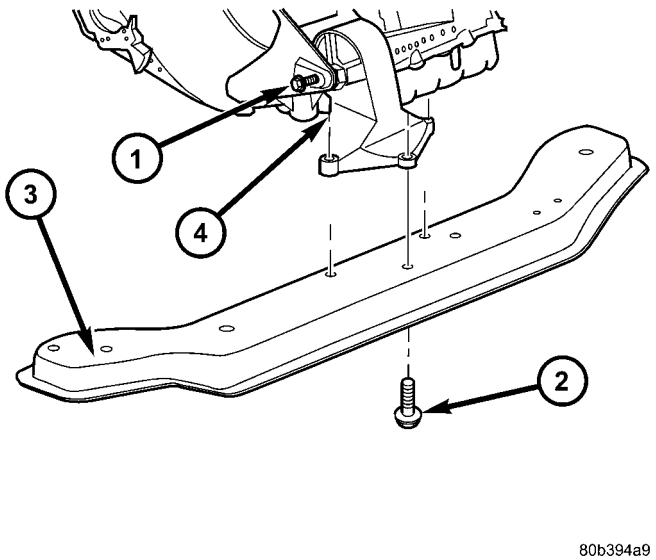

Fig. 77 FRONT ENGINE MOUNT

1 - HORIZONTAL THROUGH BOLT
2 - VERTICAL BOLT(S)
3 - LOWER RADIATOR CROSSMEMBER
4 - FRONT ENGINE MOUNT

INSTALLATION

(1) Position front mount on lower radiator crossmember.
(2) Loose install front mount to bracket through bolt.
(3) Install front mount vertical bolts. Tighten bolts to 61 N·m (45 ft. lbs.) (Fig. 77).
(4) Tighten horizontal through bolt to 61 N·m (45 ft. lbs.) (Fig. 77).
(5) Lower vehicle.

REAR MOUNT

REMOVAL

(1) Remove throttle body air inlet hose and air cleaner housing assembly.
(2) Remove three vertical bolts attaching rear mount bracket to transaxle case (Fig. 78).
(3) Raise vehicle on hoist.
(4) Remove rear mount bracket through bolt (Fig. 78).
(5) Remove horizontal bolt attaching rear mount bracket to transaxle case (Fig. 78).
(6) Remove mount bracket.
(7) Remove rear mount to suspension crossmember attaching bolts.
(8) Remove rear mount.

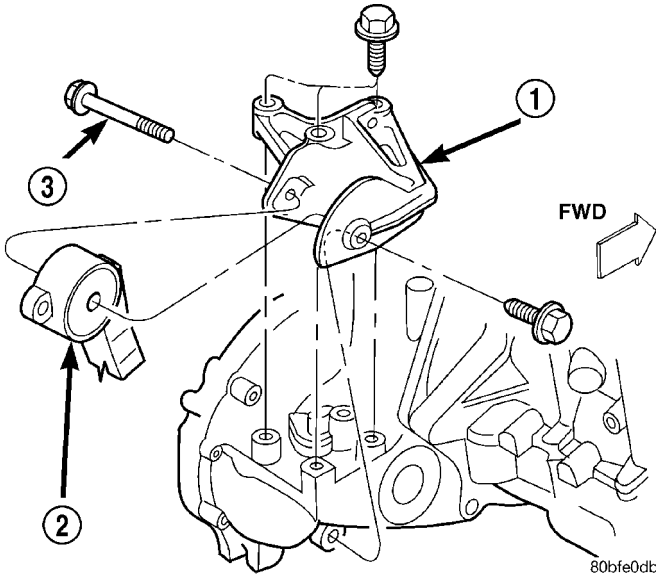

Fig. 78 Engine Mounting—Rear

1 - REAR TORQUE BRACKET
2 - REAR MOUNT
3 - THROUGH BOLT

INSTALLATION

(1) Position rear mount on suspension crossmember and loosely install bolts.
(2) Position mount bracket on transaxle and install bolts. Tighten to 110 N·m (80 ft. lbs.) (Fig. 78).
(3) Install rear mount to bracket through bolt and tighten to 61 N·m (45 ft. lbs.) (Fig. 78).
(4) Tighten rear mount to crossmember bolts to 61 N·m (45 ft. lbs.) (Fig. 78).
(5) Lower vehicle. Install throttle body air inlet hose and air cleaner housing assembly.

LUBRICATION

DESCRIPTION

The lubrication system is a full-flow filtration, pressure feed type. The oil pump (Fig. 79) is mounted in the front engine cover and driven by the crankshaft.

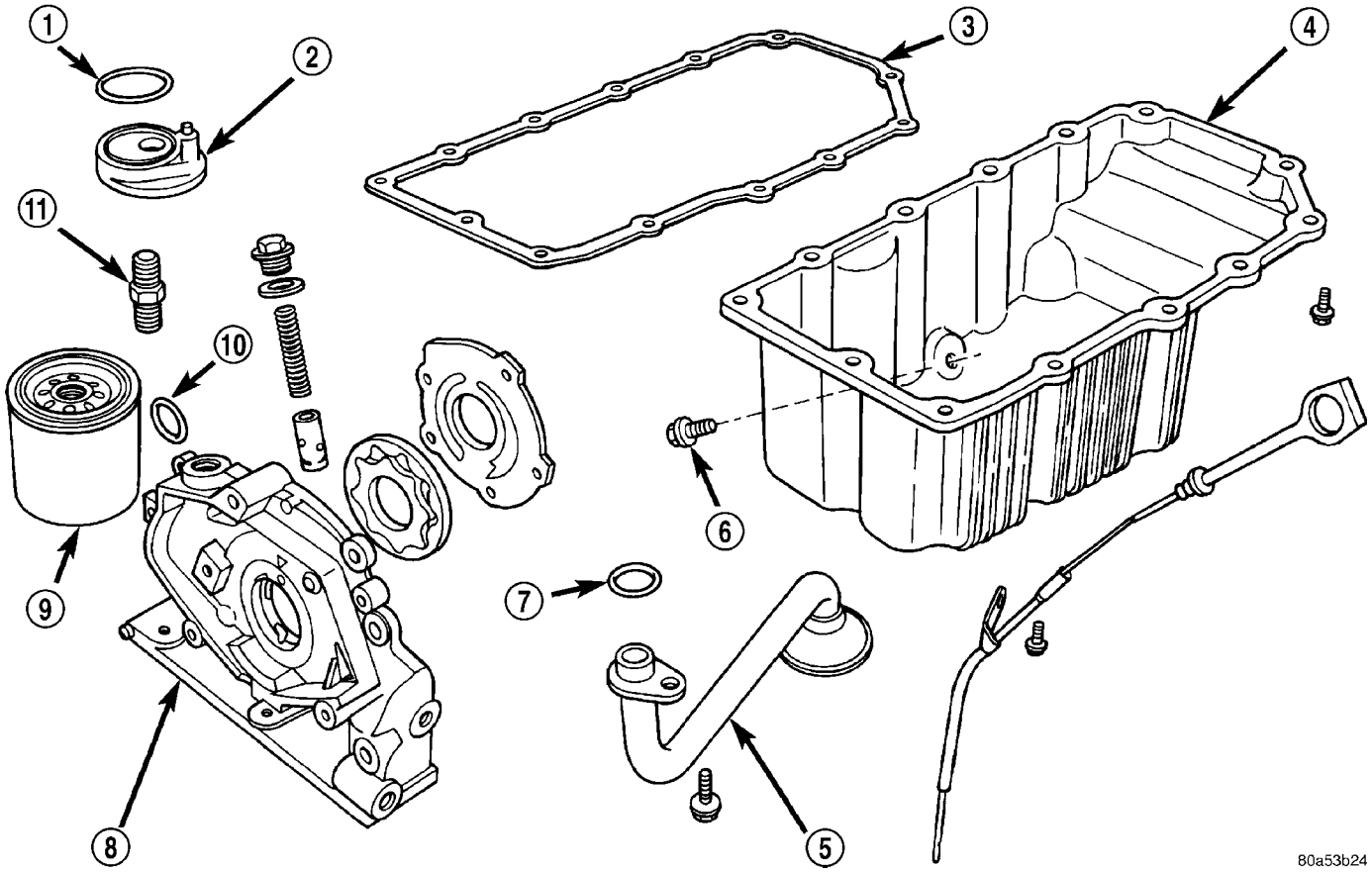

Fig. 79 Engine Lubrication Components

1 - O-RING
2 - OIL FILTER ADAPTER
3 - OIL PAN GASKET
4 - OIL PAN
5 - OIL PICK-UP TUBE
6 - DRAIN PLUG
7 - O-RING
8 - OIL PUMP BODY
9 - FILTER
10 - O-RING
11 - NIPPLE

LUBRICATION (Continued)

OPERATION

Refer to (Fig. 80) for lubrication system flow.

Engine oil drawn from the oil pan sump through the pickup tube is pressurized by the pump and routed through the full-flow filter to the main oil gallery running the length of the cylinder block. A diagonal hole in each bulkhead feeds oil to each main bearing. Drilled passages within the crankshaft route oil from main bearing journals to connecting rod journals. A vertical hole at the number five bulkhead routes pressurized oil through a restrictor and up past a cylinder head bolt to an oil gallery running the length of the cylinder head. The restrictor, an integral part of the cylinder head gasket, provides increased oil flow to the main oil gallery. The camshaft journals are partially slotted to allow a predetermined amount of pressurized oil to pass into the bearing cap cavities with small holes directed to spray lubricate the camshaft lobes. Oil returning to the pan from pressurized components supplies lubrication to the valve stems. Cylinder bores and wrist pins are splash lubricated from directed slots on the connecting rod thrust collars.

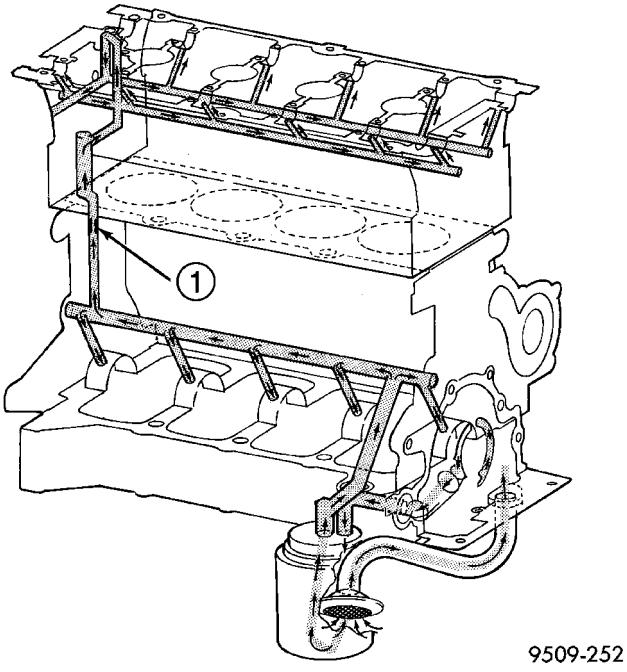

Fig. 80 Engine Lubrication System

1 - RESTRICTOR

DIAGNOSIS AND TESTING - CHECKING ENGINE OIL PRESSURE

Check oil pressure using a gauge at oil pressure switch location.

(1) Remove oil pressure switch.

(2) Install oil pressure test gauge assembly C-3292 with adaptor 8406. For Special Tool identification, (Refer to 9 - ENGINE - SPECIAL TOOLS).

CAUTION: If oil pressure is 0 at idle, Do Not Run engine at 3000 RPM.

(3) Warm engine to normal operating temperature.

(4) Monitor gauge readings at idle and 3000 rpm. Oil Pressure: **Idle** 25 kPa (4 psi) minimum, **3000 RPM** 170-550 kPa (25-80 psi).

(5) If oil pressure is 0 at idle, shut off engine and check the following:

- Pressure relief valve stuck open
- Clogged oil pick-up screen
- Damaged oil pick-up tube O-ring

OIL

STANDARD PROCEDURE

ENGINE OIL LEVEL CHECK

The best time to check engine oil level is after it has sat overnight, or if the engine has been running, allow the engine to be shut off for at least 5 minutes before checking oil level.

Checking the oil while the vehicle is on level ground will improve the accuracy of the oil level reading. Remove dipstick and observe oil level (Fig. 81). Add oil only when the level is at or below the ADD mark (Fig. 82).

STANDARD PROCEDURE - ENGINE OIL AND FILTER CHANGE

Change engine oil at mileage and time intervals described in the Maintenance Schedule. (Refer to LUBRICATION & MAINTENANCE/MAINTENANCE SCHEDULES - DESCRIPTION)

WARNING: NEW OR USED ENGINE OIL CAN BE IRRITATING TO THE SKIN. AVOID PROLONGED OR REPEATED SKIN CONTACT WITH ENGINE OIL. CONTAMINANTS IN USED ENGINE OIL, CAUSED BY INTERNAL COMBUSTION, CAN BE HAZARDOUS TO YOUR HEALTH. THOROUGHLY WASH EXPOSED SKIN WITH SOAP AND WATER. DO NOT WASH SKIN WITH GASOLINE, DIESEL FUEL, THINNER, OR SOLVENTS, HEALTH PROBLEMS CAN RESULT. DO NOT POLLUTE, DISPOSE OF USED ENGINE OIL PROPERLY. CONTACT YOUR DEALER OR GOVERNMENT AGENCY FOR LOCATION OF COLLECTION CENTER IN YOUR AREA.

Run engine until achieving normal operating temperature.

(1) Position the vehicle on a level surface and turn engine off.

(2) Remove oil fill cap.

(3) Raise vehicle on hoist.

OIL (Continued)

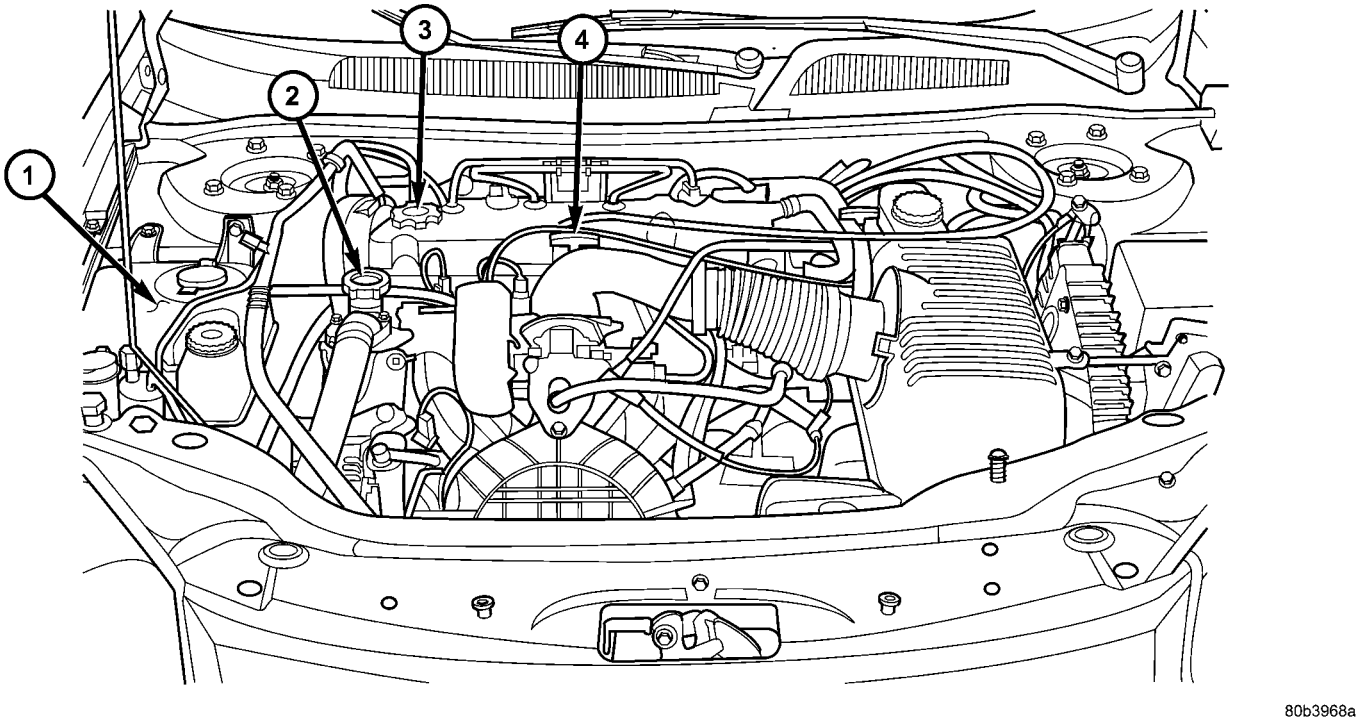

Fig. 81 Fluid Level Check - 2.0/2.4L

1 - COOLANT RECOVERY CONTAINER
2 - COOLANT PRESSURE CAP
3 - ENGINE OIL FILL
4 - ENGINE OIL DIPSTICK

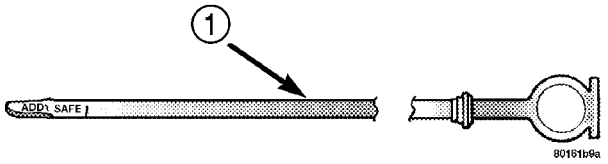

Fig. 82 Oil Level

1 - ENGINE OIL LEVEL DIPSTICK

(4) Place a suitable drain pan under crankcase drain.

(5) Remove drain plug from crankcase and allow oil to drain into pan. Inspect drain plug threads for stretching or other damage. Replace drain plug and gasket if damaged.

(6) Remove oil filter. (Refer to 9 - ENGINE/LUBRICATION/OIL FILTER - REMOVAL)

(7) Install and tighten drain plug in crankcase.

(8) Install new oil filter. (Refer to 9 - ENGINE/LUBRICATION/OIL FILTER - INSTALLATION)

(9) Lower vehicle and fill crankcase with specified type and amount of engine oil. (Refer to LUBRICATION & MAINTENANCE/FLUID TYPES - DESCRIPTION)

(10) Install oil fill cap.

(11) Start engine and inspect for leaks.

(12) Stop engine and inspect oil level.

NOTE: Care should be exercised when disposing used engine oil after it has been drained from a vehicle engine. Refer to the WARNING listed above.

OIL FILTER

REMOVAL

CAUTION: When servicing the oil filter (Fig. 83), avoid deforming the filter. Use an appropriate oil filter removing tool. Position filter wrench strap close the seam at the base of the filter. The oil filter seam that joins the can to the base, is reinforced by the base plate.

(1) Turn filter counterclockwise to remove (Fig. 83).

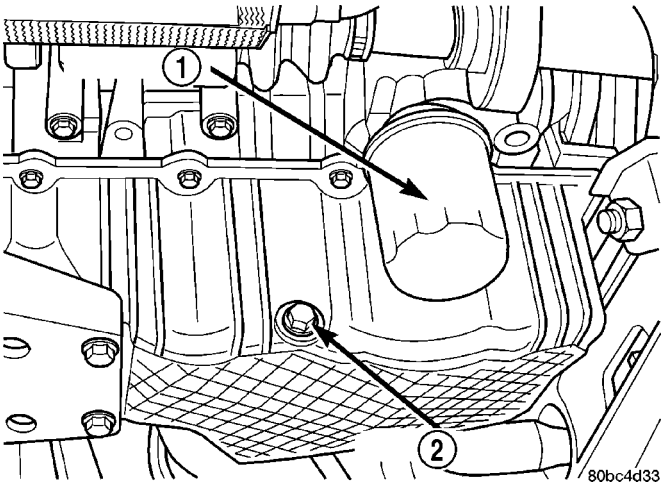

Fig. 83 Engine Oil Filter

1 - OIL FILTER
2 - DRAIN PLUG

INSTALLATION

(1) Clean and check the filter mounting surface. The surface must be smooth, flat and free of debris or old pieces of rubber.

(2) Lubricate new filter gasket.

(3) Screw filter on until gasket contacts base (Fig. 83). Tighten to 11 N·m (8 ft. lbs.).

OIL FILTER ADAPTER

REMOVAL

(1) Remove the oil filter (Refer to 9 - ENGINE/LUBRICATION/OIL FILTER - REMOVAL).

(2) Remove assembly by unscrewing adaptor fitting (Fig. 84).

(3) Remove O-ring seal.

INSTALLATION

(1) Position O-ring in the groove on adapter.

(2) Align roll pin into engine block and tighten assembly to 80 N·m (60 ft. lbs.) (Fig. 84).

(3) Install oil filter (Refer to 9 - ENGINE/LUBRICATION/OIL FILTER - INSTALLATION).

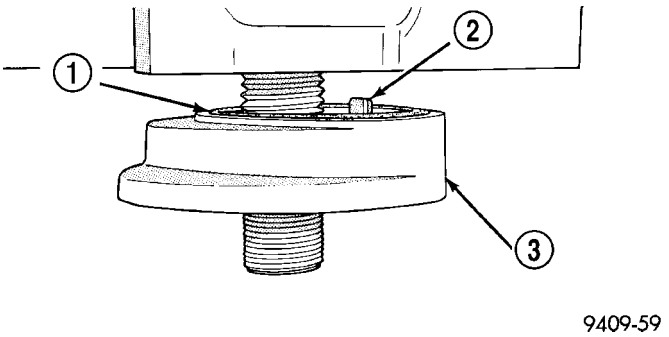

Fig. 84 Engine Oil Filter Adapter to Engine Block

1 - O-RING
2 - LOCATING ROLL PIN
3 - OIL FILTER ADAPTER

OIL PAN

REMOVAL

(1) Disconnect negative cable from battery.

(2) Raise vehicle on hoist.

(3) Drain engine oil and remove oil filter.

(4) Remove oil filter adaptor from engine block (Fig. 84) (Refer to 9 - ENGINE/LUBRICATION/OIL FILTER ADAPTER - REMOVAL).

(5) Remove structural collar (Fig. 85).

(6) Remove lateral bending brace.

(7) Remove transaxle dust cover.

(8) Remove oil pan bolts.

(9) Remove oil pan.

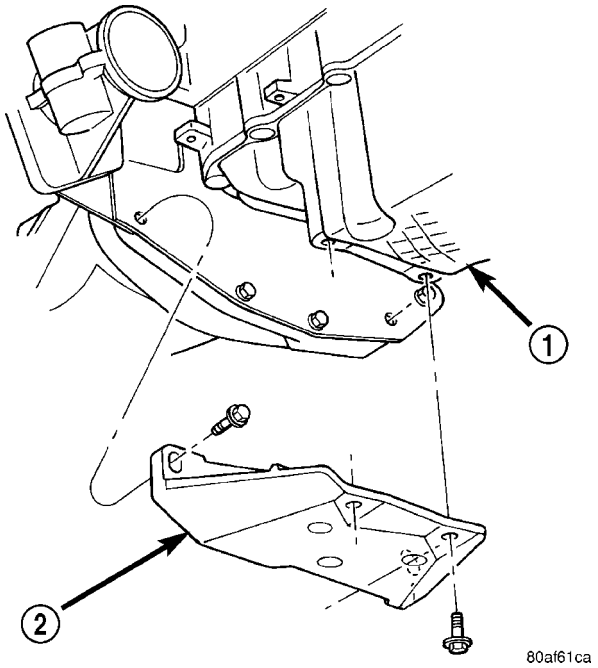

Fig. 85 Structural Collar

1 - OIL PAN
2 - STRUCTURAL COLLAR

OIL PAN (Continued)

INSTALLATION

(1) Clean oil pan and all sealing surfaces.

(2) Apply Mopar® Silicone Rubber Adhesive Sealant at the oil pump to engine block parting line (Fig. 86).

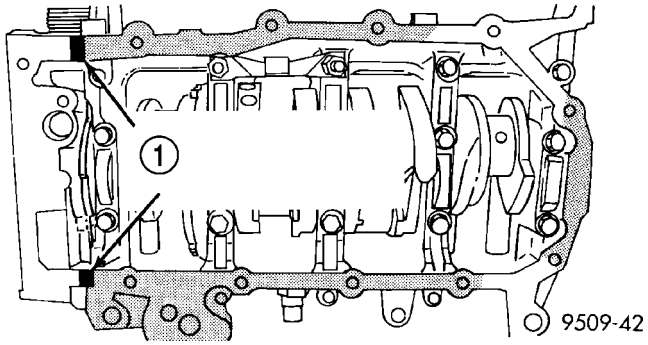

Fig. 86 Oil Pan Sealing

1 - PLACE A 1/8 INCH BEAD OF SEALER AT THE PARTING LINE OF THE OIL PUMP TO ENGINE BLOCK

(3) Position a new oil pan gasket onto pan.

(4) Install oil pan and tighten screws to 12 N·m (105 in. lbs.).

(5) Install transaxle dust cover.

(6) Install lateral bending brace.

(7) Install structural collar (Fig. 85) (Refer to 9 - ENGINE/ENGINE BLOCK/STRUCTURAL COVER - INSTALLATION).

(8) Install oil filter adaptor (Fig. 84)(Refer to 9 - ENGINE/LUBRICATION/OIL FILTER ADAPTER - INSTALLATION).

(9) Install oil filter (Refer to 9 - ENGINE/LUBRICATION/OIL FILTER - INSTALLATION).

(10) Lower vehicle and fill engine crankcase with proper oil to correct level.

OIL PRESSURE SENSOR/ SWITCH

REMOVAL

(1) Raise vehicle.

(2) Position oil collecting container under pressure switch location.

(3) Disconnect oil pressure switch electrical connector and remove switch (Fig. 87).

INSTALLATION

(1) Install oil pressure switch and connect electrical connector (Fig. 87).

(2) Lower vehicle.

(3) Start engine and allow to run a minimum of 2 minutes.

(4) Shut engine off and check engine oil level. Adjust level as necessary.

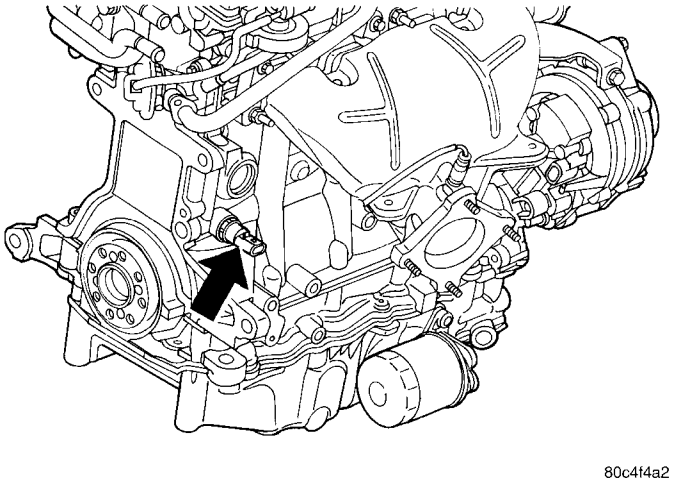

Fig. 87 Engine Oil Pressure Switch

OIL PUMP

REMOVAL

(1) Disconnect negative cable from battery.

(2) Remove crankshaft vibration damper (Refer to 9 - ENGINE/ENGINE BLOCK/VIBRATION DAMPER - REMOVAL).

(3) Remove the front timing belt cover (Refer to 9 - ENGINE/VALVE TIMING/TIMING BELT COVER(S) - REMOVAL).

(4) Remove the timing belt (Refer to 9 - ENGINE/VALVE TIMING/TIMING BELT AND SPROCKETS - REMOVAL).

(5) Remove the timing belt tensioner pulley bracket (Refer to 9 - ENGINE/VALVE TIMING/TIMING BELT TENSIONER & PULLEY - REMOVAL).

(6) Remove the camshaft sprockets and the rear timing belt cover (Refer to 9 - ENGINE/VALVE TIMING/TIMING BELT COVER(S) - REMOVAL).

(7) Drain engine oil. Remove the oil pan (Refer to 9 - ENGINE/LUBRICATION/OIL PAN - REMOVAL).

(8) Remove crankshaft sprocket using Special Tool 6793 and insert C-4685-C2 (Fig. 88).

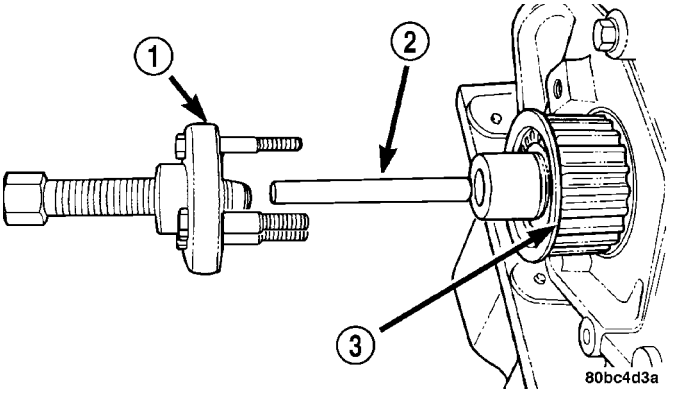

Fig. 88 Crankshaft Sprocket—Removal

1 - SPECIAL TOOL 6793
2 - SPECIAL TOOL C-4685–C2
3 - CRANKSHAFT SPROCKET

OIL PUMP (Continued)

(9) Remove the oil pick-up tube.

(10) Remove the oil pump (Fig. 89) and front crankshaft seal.

DISASSEMBLY

(1) To remove the relief valve, proceed as follows:

(2) Remove the threaded plug and gasket from the oil pump (Fig. 90).

CAUTION: Oil pump pressure relief valve must be installed as shown in (Fig. 90) or serious damage may occur.

(3) Remove spring and relief valve (Fig. 90).

(4) Remove oil pump cover screws, and lift off cover.

(5) Remove pump rotors.

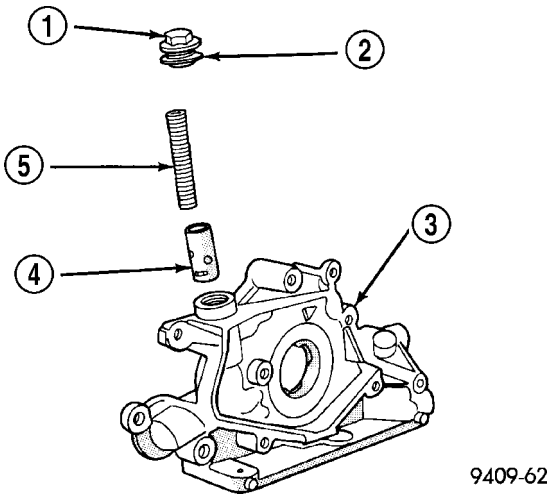

Fig. 90 Oil Pressure Relief Valve

1 - RETAINER CAP
2 - GASKET
3 - OIL PUMP BODY
4 - RELIEF VALVE
5 - SPRING

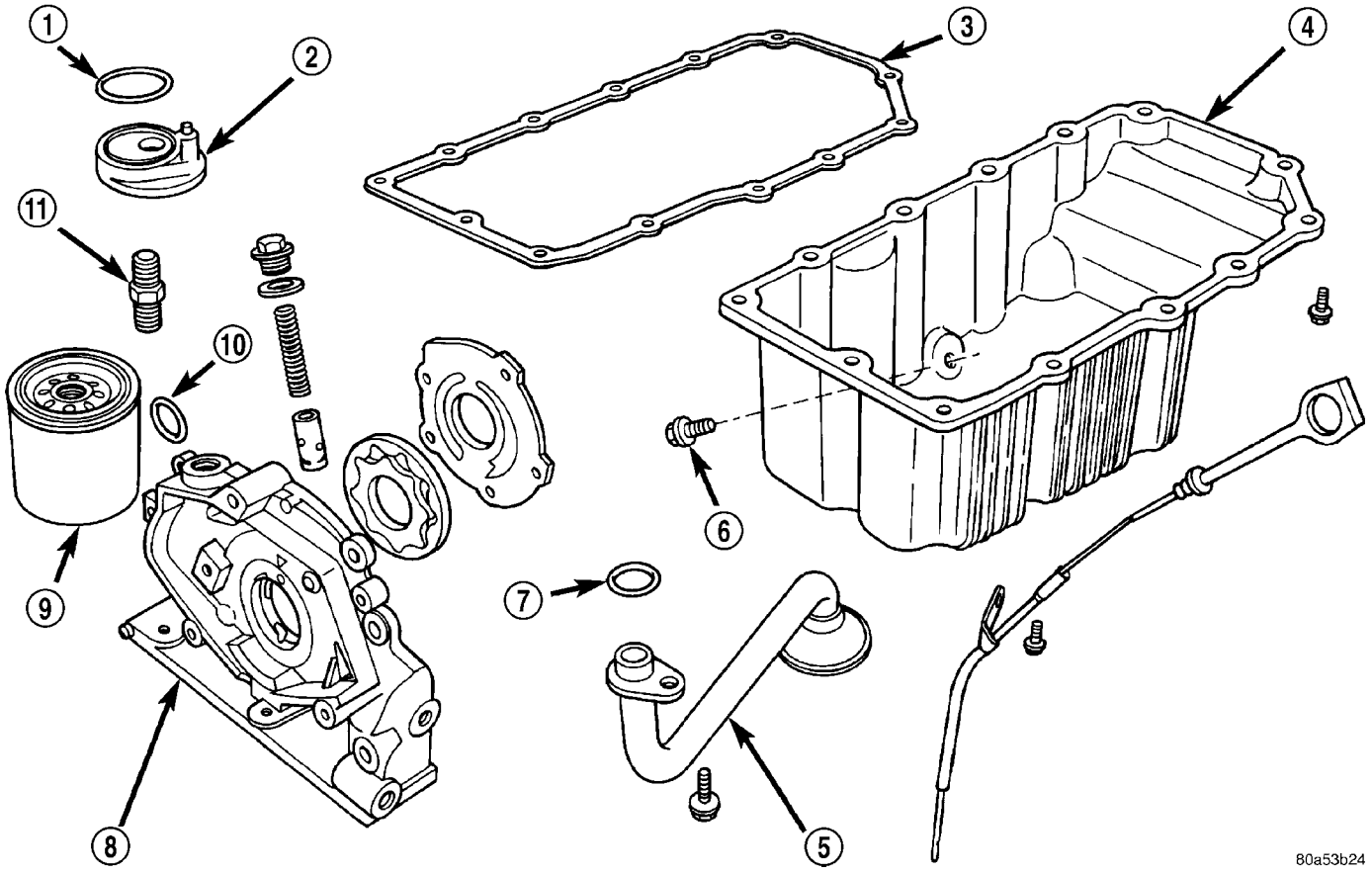

Fig. 89 Oil Pump and Tube

1 - O-RING
2 - OIL FILTER ADAPTER
3 - OIL PAN GASKET
4 - OIL PAN
5 - OIL PICK-UP TUBE
6 - DRAIN PLUG
7 - O-RING
8 - OIL PUMP BODY
9 - FILTER
10 - O-RING
11 - NIPPLE

OIL PUMP (Continued)

(6) Wash all parts in a suitable solvent and inspect carefully for damage or wear (Fig. 91).

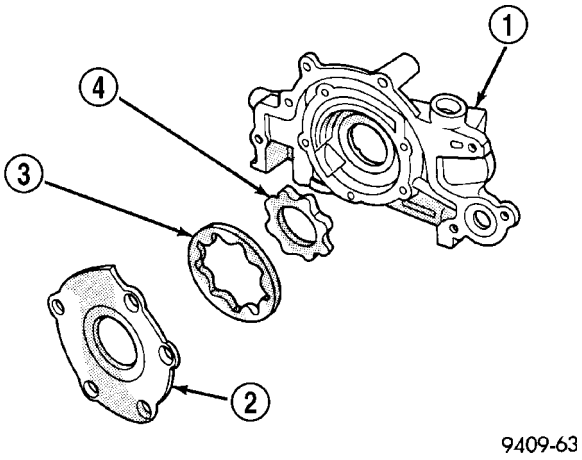

Fig. 91 Oil Pump

1 - OIL PUMP BODY
2 - OIL PUMP COVER
3 - OUTER ROTOR
4 - INNER ROTOR

INSPECTION

(1) Clean all parts thoroughly. Mating surface of the oil pump should be smooth. Replace pump cover if scratched or grooved.

(2) Lay a straightedge across the pump cover surface (Fig. 92). If a 0.076 mm (0.003 in.) feeler gauge can be inserted between cover and straight edge, cover should be replaced.

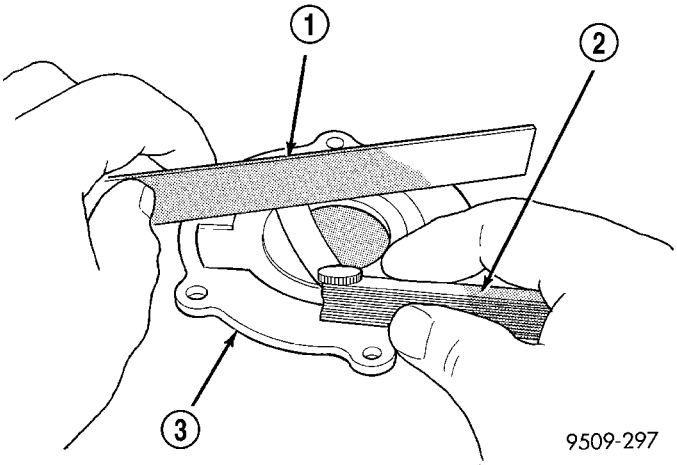

Fig. 92 Checking Oil Pump Cover Flatness

1 - STRAIGHT EDGE
2 - FEELER GAUGE
3 - OIL PUMP COVER

(3) Measure thickness and diameter of outer rotor. If outer rotor thickness measures 7.64 mm (0.301 in.) or less (Fig. 93), or if the diameter is 79.95 mm (3.148 in.) or less, replace outer rotor.

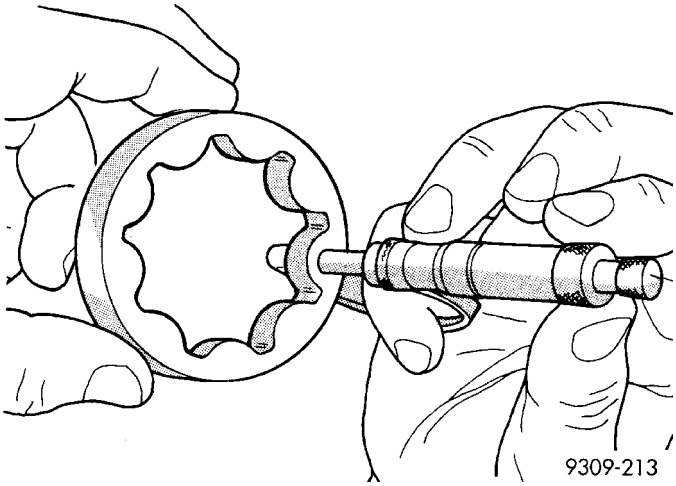

Fig. 93 Measuring Outer Rotor Thickness

(4) If inner rotor measures 7.64 mm (0.301 in) or less replace inner rotor (Fig. 94).

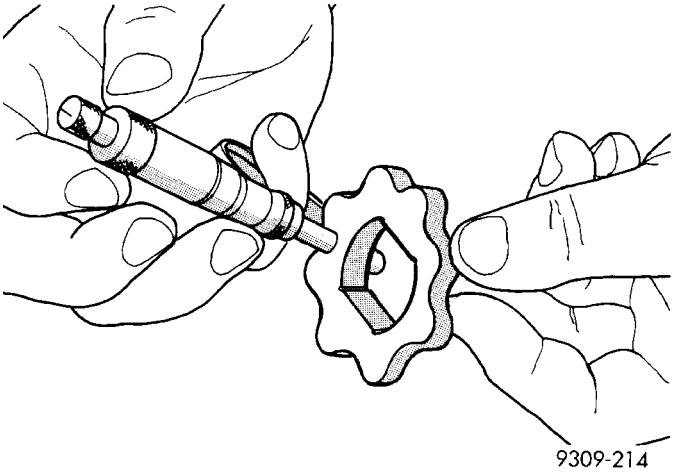

Fig. 94 Measuring Inner Rotor Thickness

OIL PUMP (Continued)

(5) Slide outer rotor into pump housing, press to one side with fingers and measure clearance between rotor and housing (Fig. 95). If measurement is 0.39 mm (0.015 in.) or more, replace housing only if outer rotor is in specification.

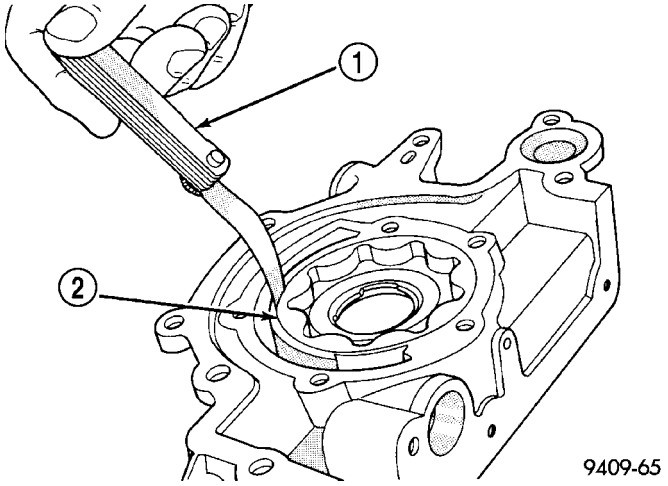

Fig. 95 Measuring Outer Rotor Clearance in Housing

1 - FEELER GAUGE
2 - OUTER ROTOR

(6) Install inner rotor into pump housing. If clearance between inner and outer rotors (Fig. 96) is 0.203 mm (0.008 in.) or more, replace both rotors.

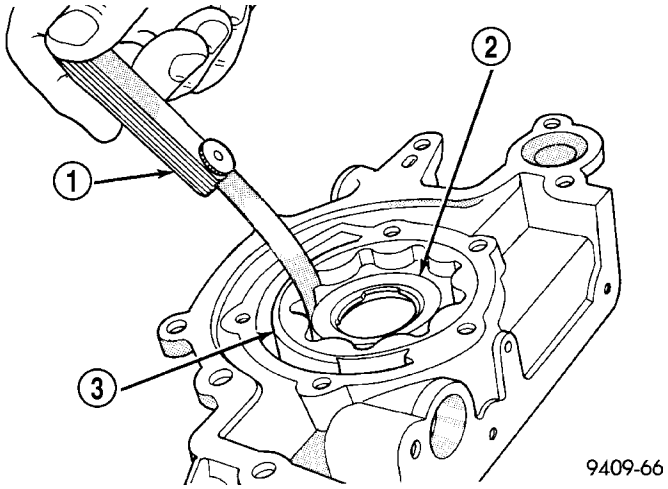

Fig. 96 Measuring Clearance Between Rotors

1 - FEELER GAUGE
2 - INNER ROTOR
3 - OUTER ROTOR

(7) Place a straightedge across the face of the pump housing, between bolt holes. If a feeler gauge of 0.102 mm (0.004 inch) or more can be inserted between rotors and the straightedge, replace pump assembly (Fig. 97). **ONLY** if rotors are in specs.

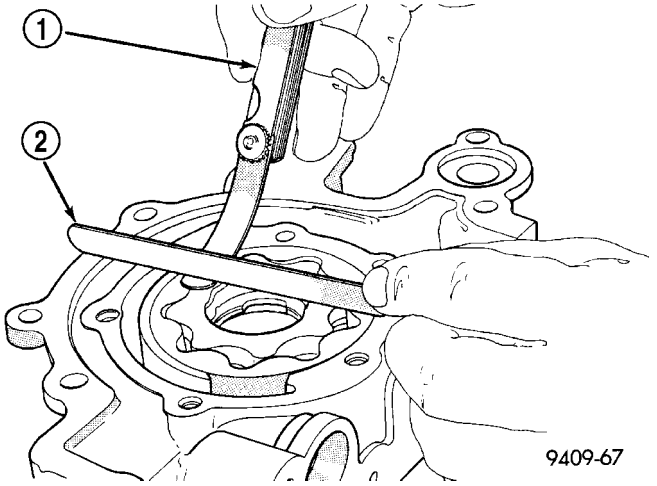

Fig. 97 Measuring Clearance Over Rotors

1 - FEELER GAUGE
2 - STRAIGHT EDGE

(8) Inspect oil pressure relief valve plunger for scoring and free operation in its bore. Small marks may be removed with 400-grit wet or dry sandpaper.

(9) The relief valve spring has a free length of approximately 60.7 mm (2.39 in.) it should test between 18 and 19 pounds when compressed to 40.5 mm (1.60 in.). Replace spring that fails to meet specifications.

(10) If oil pressure is low and pump is within specifications, inspect for worn engine bearings, damaged or missing oil pick-up tube O-ring, clogged oil pick-up tube screen, clogged oil filter and stuck open pressure relief valve or other reasons for oil pressure loss.

ASSEMBLY

(1) Install oil pump rotors (Fig. 91).

(2) Install oil pump cover and screws (Fig. 91). Tighten screws to 12 N·m (105 in. lbs.).

CAUTION: Oil pump pressure relief valve must be installed as shown in (Fig. 90) or serious damage may occur.

(3) Install spring and relief valve (Fig. 90).

(4) Install threaded plug and gasket to the oil pump (Fig. 90). Tighten plug to 41 N·m (30 ft. lbs.).

INSTALLATION

(1) Make sure all surfaces are clean and free of oil and dirt.

OIL PUMP (Continued)

(2) Apply Mopar® Gasket Maker to oil pump as shown in (Fig. 98). Install oil ring into oil pump body discharge passage.

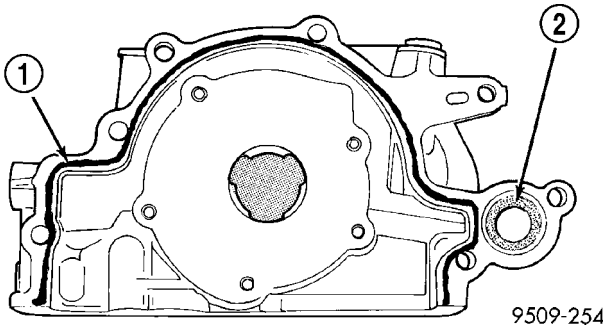

Fig. 98 Oil Pump Sealing

1 - APPLY GASKET MAKER TO OIL PUMP BODY FLANGE
2 - O-RING

(3) Prime oil pump before installation.

(4) Align oil pump rotor flats with flats on crankshaft as you install the oil pump to the block.

NOTE: Front crankshaft seal MUST be out of pump to align, or damage may result.

(5) Torque all oil pump attaching bolts to 28 N·m (250 in. lbs.).

(6) Install new front crankshaft seal using Special Tool 6780 (Fig. 99).

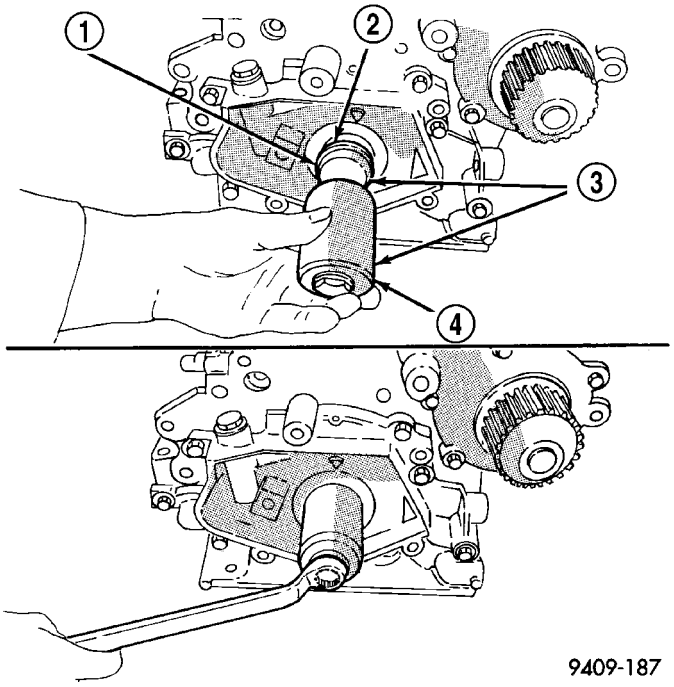

Fig. 99 Front Crankshaft Seal—Installation

1 - PROTECTOR
2 - SEAL
3 - SPECIAL TOOL 6780–1
4 - INSTALLER

(7) Install crankshaft sprocket, using Special Tool 6792 (Fig. 100).

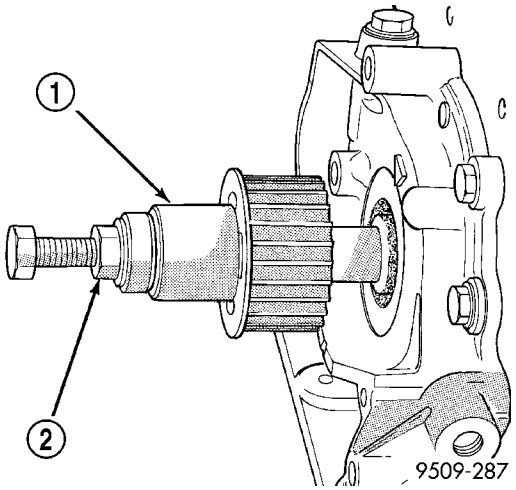

Fig. 100 Crankshaft Sprocket—Installation

1 - SPECIAL TOOL 6792
2 - TIGHTEN NUT TO INSTALL

(8) Install oil pick-up tube and oil pan (Refer to 9 - ENGINE/LUBRICATION/OIL PAN - INSTALLATION).

(9) Install timing belt rear cover and camshaft sprockets (Refer to 9 - ENGINE/VALVE TIMING/TIMING BELT COVER(S) - INSTALLATION).

(10) Install the timing belt tensioner pulley bracket (Refer to 9 - ENGINE/VALVE TIMING/TMNG BELT/CHAIN TENSIONER&PULLEY - INSTALLATION).

(11) Install the timing belt (Refer to 9 - ENGINE/VALVE TIMING/TIMING BELT AND SPROCKETS - INSTALLATION).

(12) Install the front timing belt cover (Refer to 9 - ENGINE/VALVE TIMING/TIMING BELT COVER(S) - INSTALLATION).

(13) Install crankshaft vibration damper (Refer to 9 - ENGINE/ENGINE BLOCK/VIBRATION DAMPER - INSTALLATION).

(14) Fill engine crankcase with proper oil to correct level.

(15) Connect negative cable to battery.

INTAKE MANIFOLD

DIAGNOSIS AND TESTING - INTAKE MANIFOLD LEAKS

An intake manifold air leak is characterized by lower than normal manifold vacuum. Also, one or more cylinders may not be functioning.

WARNING: USE EXTREME CAUTION WHEN THE ENGINE IS OPERATING. DO NOT STAND IN A DIRECT LINE WITH THE FAN. DO NOT PUT YOUR HANDS NEAR THE PULLEYS, BELTS OR THE FAN. DO NOT WEAR LOOSE CLOTHING.

(1) Start the engine.
(2) Spray a small stream of water (Spray Bottle) at the suspected leak area.
(3) If engine RPM'S change, the area of the suspected leak has been found.
(4) Repair as required.

REMOVAL

WARNING: RELEASE FUEL SYSTEM PRESSURE BEFORE SERVICING SYSTEM COMPONENTS. SERVICE VEHICLES IN WELL VENTILATED AREAS AND AVOID IGNITION SOURCES. NEVER SMOKE WHILE SERVICING THE VEHICLE.

(1) Perform fuel system pressure release procedure **before attempting any repairs.**(Refer to 14 - FUEL SYSTEM/FUEL DELIVERY - STANDARD PROCEDURE).
(2) Disconnect negative battery cable.
(3) Drain cooling system (Refer to 7 - COOLING/ ENGINE - STANDARD PROCEDURE).
(4) Remove throttle body air inlet hose and air cleaner housing assembly.
(5) Remove throttle and speed control cables from throttle lever and bracket.
(6) Remove EGR tube (if equipped).
(7) Remove engine oil dipstick and tube from engine block. Plug hole in block to prevent debris or fluid from entering engine crankcase.
(8) Disconnect necessary vacuum hoses from intake manifold.
(9) Disconnect the fuel supply line quick connect at the fuel rail assembly.

WARNING: WRAP SHOP TOWELS AROUND HOSE TO CATCH ANY GASOLINE SPILLAGE.

(10) Remove fastener holding fuel rail bracket to side of cylinder head.
(11) Disconnect the following electrical connectors:
- Fuel Injectors
- Knock Sensor
- ECT Sensor
- IAC
- TPS
- MAP Sensor
- A/C Pressure Sensor
- A/C Compressor Clutch
- Generator

(12) Reposition wiring harness.
(13) Remove fuel rail support bracket (Fig. 101).
(14) Remove fuel rail.

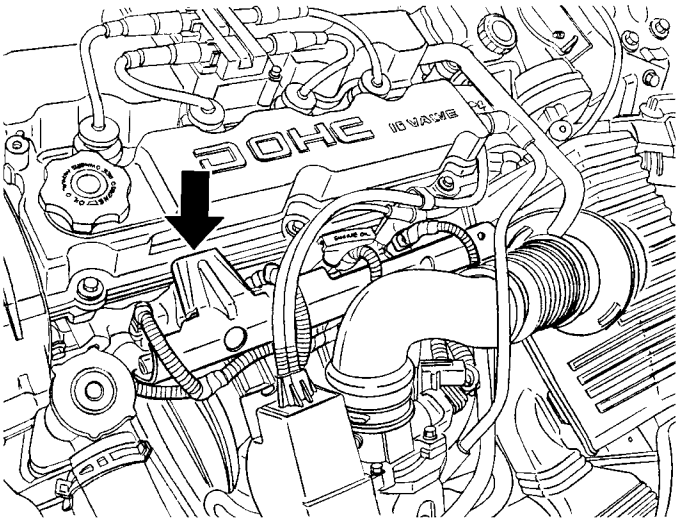

Fig. 101 Fuel Rail Support Bracket

(15) Remove coolant outlet connector (Refer to 7 - COOLING/ENGINE/COOLANT OUTLET HOUSING - REMOVAL).
(16) Remove intake manifold fasteners. Remove intake manifold.

CLEANING

(1) Discard gasket(s).
(2) Clean all sealing surfaces.

INSPECTION

(1) Inspect manifold for cracks or distortion. Replace manifold if necessary.
(2) Inspect manifold for gasket surface damage or warpage. Replace manifold if necessary.

INSTALLATION

(1) Install new intake manifold and gasket. Gradually tighten fasteners to 28 N·m (250 in. lbs.) in sequence shown in (Fig. 102).
(2) Install coolant outlet connector (Refer to 7 - COOLING/ENGINE/COOLANT OUTLET HOUSING - INSTALLATION).
(3) Install fuel rail.
(4) Install fuel rail support bracket (Fig. 101).

INTAKE MANIFOLD (Continued)

(5) Connect previously disconnected electrical connectors.

(6) Install fastener holding fuel rail bracket to side of cylinder head.

(7) Inspect quick connect fittings for damage, replace if necessary. Connect fuel supply hose to fuel rail assembly. Check connection by pulling on connector to insure it locked into position.

(8) Connect vacuum hoses to intake manifold.

(9) Install engine oil dipstick and tube.

(10) Install EGR tube (if equipped).

(11) Install throttle and speed control cables to bracket. Connect cables to the throttle lever.

(12) Fill cooling system (Refer to 7 - COOLING/ ENGINE - STANDARD PROCEDURE).

(13) Connect negative battery cable.

(14) With the DRB scan tool use ASD Fuel System Test to pressurize system to check for leaks.

CAUTION: When using the ASD Fuel System Test, the Auto Shutdown (ASD) relay will remain energized for 7 minutes or until the ignition switch is turned to the OFF position, or Stop All Test is selected.

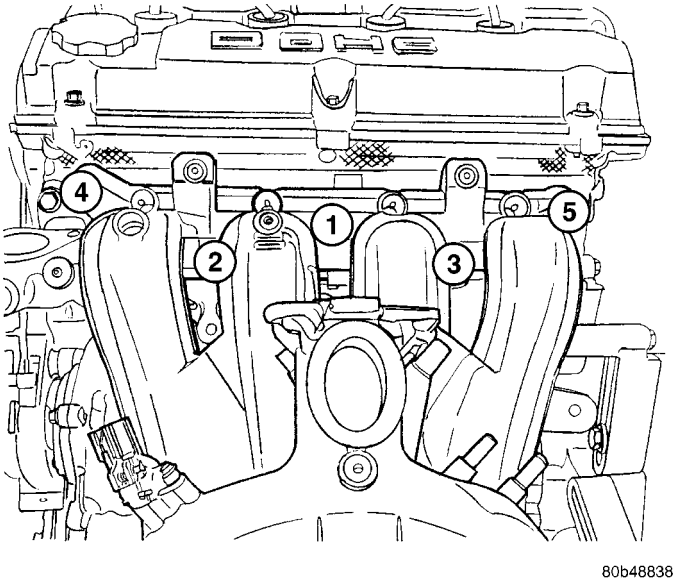

Fig. 102 Intake Manifold Tightening Sequence

EXHAUST MANIFOLD

REMOVAL

(1) Disconnect negative battery cable.

(2) Raise vehicle on hoist.

(3) Remove complete exhaust system (Refer to 11 - EXHAUST SYSTEM - REMOVAL).

(4) Remove rear engine mount and transaxle bracket.

(5) Remove exhaust manifold heat shield (Fig. 103).

(6) Disconnect oxygen sensor electrical connector.

(7) Remove exhaust manifold retaining fasteners and remove exhaust manifold.

(8) Remove and discard manifold gasket.

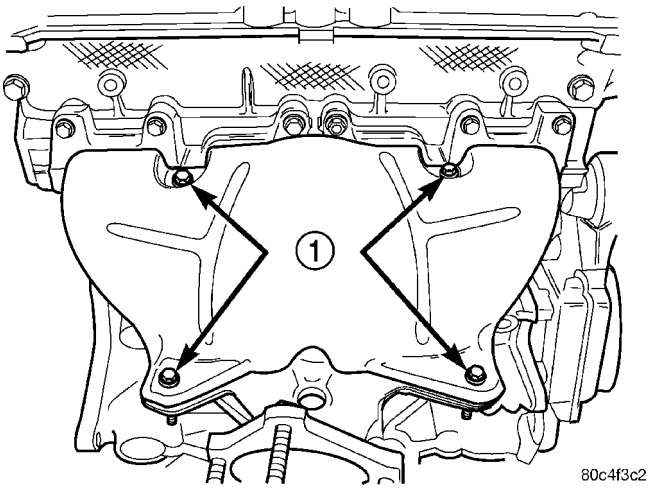

Fig. 103 Exhaust Manifold Heat Shield Bolts

1 - BOLTS

CLEANING

(1) Discard gasket (if equipped) and clean all surfaces of manifold and cylinder head.

INSPECTION

(1) Inspect manifold gasket surfaces for flatness with straight edge. Surface must be flat within 0.15 mm per 300 mm (0.006 in. per foot) of manifold length.

(2) Inspect manifolds for cracks or distortion. Replace manifold as necessary.

EXHAUST MANIFOLD (Continued)

INSTALLATION

(1) Install new exhaust manifold gasket. **DO NOT APPLY SEALER**.

(2) Position exhaust manifold in place. Gradually tighten fasteners in sequence shown in (Fig. 104) to 23 N·m (200 in. lbs.).

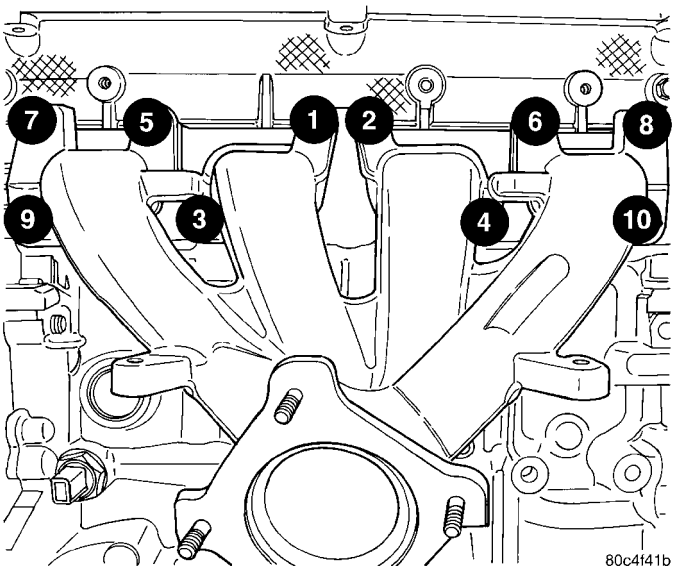

Fig. 104 Exhaust Manifold Tightening Sequence

(3) Install exhaust manifold heat shield.

(4) Connect oxygen sensor electrical connector.

(5) Install rear engine mount and transaxle bracket.

(6) Install exhaust system (Refer to 11 - EXHAUST SYSTEM - INSTALLATION). Tighten fasteners to 28 N·m (250 in. lbs.).

(7) Lower vehicle.

(8) Connect negative battery cable.

VALVE TIMING

STANDARD PROCEDURE - VALVE TIMING VERIFICATION

(1) Remove number one spark plug.

(2) Using a dial indicator, set number one cylinder to TDC on the compression stroke.

(3) Remove the access plug from the front timing belt cover.

(4) Check the timing marks on the camshaft sprockets, they should align with each other (Fig. 105).

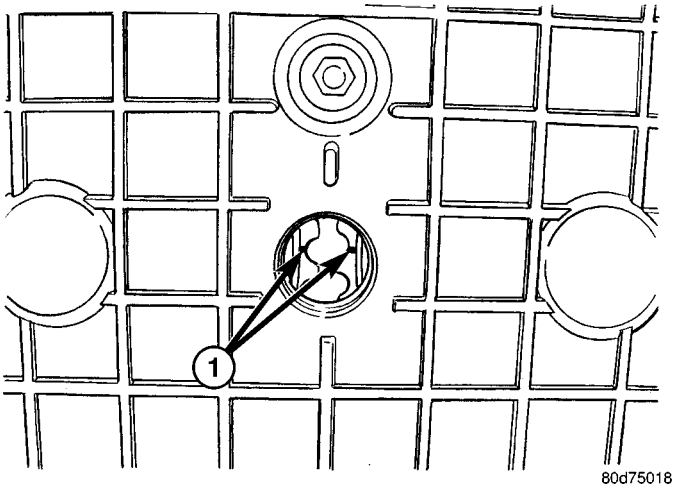

Fig. 105 Camshaft Timing Check

1 - CAMSHAFT TIMING MARKS SHOULD LINE UP

TIMING BELT COVER(S)

REMOVAL

FRONT COVER

(1) Disconnect negative battery cable.

(2) Raise vehicle on hoist.

(3) Remove right front wheel and accessory drive belt splash shield.

(4) Remove the accessory drive belts (Refer to 7 - COOLING/ACCESSORY DRIVE/DRIVE BELTS - REMOVAL).

(5) Remove the crankshaft damper (Refer to 9 - ENGINE/ENGINE BLOCK/VIBRATION DAMPER - REMOVAL).

(6) Remove accessory drive belt automatic tensioner.

(7) Disconnect generator connectors. Remove generator and bracket.

(8) Lower vehicle.

(9) Position a jack under engine. Raise jack enough to support engine weight.

TIMING BELT COVER(S) (Continued)

(10) Remove the right engine mount (Refer to 9 - ENGINE/ENGINE MOUNTING/RIGHT MOUNT - REMOVAL).

(11) Remove front engine mount bracket (Fig. 106).

(12) Remove the front timing belt cover (Fig. 106).

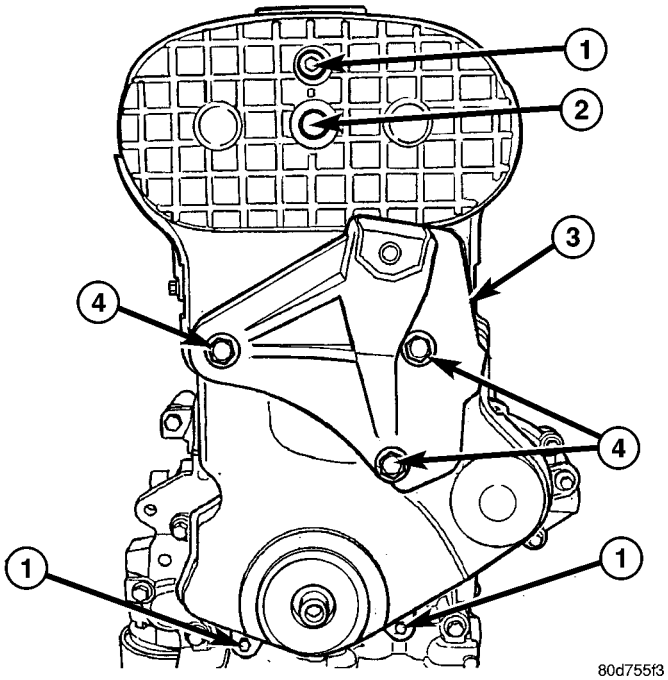

Fig. 106 Front Timing Belt Cover

1 - FRONT TIMING BELT COVER FASTENERS
2 - ACCESS PLUG
3 - FRONT ENGINE MOUNT BRACKET
4 - FASTENERS

REAR COVER

(1) Remove front timing belt cover.

CAUTION: Camshaft(s) or crankshaft should not be rotated after timing belt is removed. Damage to valve components may occur. Always align timing marks before removing timing belt.

(2) Remove timing belt (Refer to 9 - ENGINE/ VALVE TIMING/TIMING BELT AND SPROCKETS - REMOVAL).

(3) Remove timing belt tensioner assembly (Refer to 9 - ENGINE/VALVE TIMING/TIMING BELT TENSIONER & PULLEY - REMOVAL).

(4) Remove timing belt idler pulley.

(5) Hold camshaft sprockets with Special Tools C-4687 and Adaptor C-4687-1 (Fig. 107), while removing attaching bolts.

(6) Remove camshaft sprockets.

(7) Remove rear timing belt cover attaching bolts.

(8) Remove rear cover.

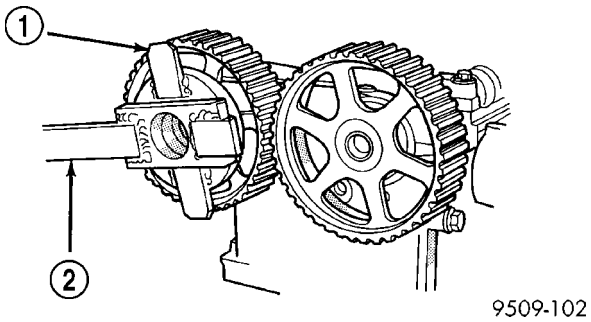

Fig. 107 Camshaft Sprocket - Removal/Installation

1 - ADAPTER C-4687–1
2 - SPECIAL TOOL C-4687

INSTALLATION

REAR COVER

(1) Install rear cover and tighten bolts to 12 N·m (105 in. lbs.).

(2) Install camshaft sprockets. While holding sprockets with Special Tools C-4687 and Adaptor C-4687-1 (Fig. 107), tighten attaching bolts to 115 N·m (85 ft. lbs.).

(3) Install timing belt idler pulley.

(4) Install timing belt tensioner assembly (Refer to 9 - ENGINE/VALVE TIMING/TIMING BELT TENSIONER & PULLEY - INSTALLATION).

(5) Install timing belt (Refer to 9 - ENGINE/ VALVE TIMING/TIMING BELT AND SPROCKETS - INSTALLATION).

(6) Install front cover.

FRONT COVER

(1) Install front cover and tighten bolts to 12 N·m (105 in. lbs.).

(2) Install engine front engine mount bracket (Fig. 106).

(3) Install right side engine mount (Refer to 9 - ENGINE/ENGINE MOUNTING/RIGHT MOUNT - INSTALLATION).

(4) Remove jack from under engine.

(5) Install generator bracket and generator. Reconnect generator connectors.

(6) Install accessory drive belt automatic tensioner.

(7) Install the crankshaft damper (Refer to 9 - ENGINE/ENGINE BLOCK/VIBRATION DAMPER - INSTALLATION).

(8) Install accessory drive belts (Refer to 7 - COOLING/ACCESSORY DRIVE/DRIVE BELTS - INSTALLATION).

(9) Install accessory drive belt splash shield and right front wheel.

(10) Connect negative battery cable.

TIMING BELT AND SPROCKETS

REMOVAL

REMOVAL - TIMING BELT

CAUTION: Camshaft(s) or crankshaft should not be rotated after timing belt is removed. Damage to valve components may occur. Always align timing marks before removing timing belt.

(1) Disconnect negative battery cable.

(2) Remove the front timing belt cover (Fig. 108) (Refer to 9 - ENGINE/VALVE TIMING/TIMING BELT COVER(S) - REMOVAL).

CAUTION: Align camshaft and crankshaft timing marks before removing the timing belt by rotating the engine with the crankshaft.

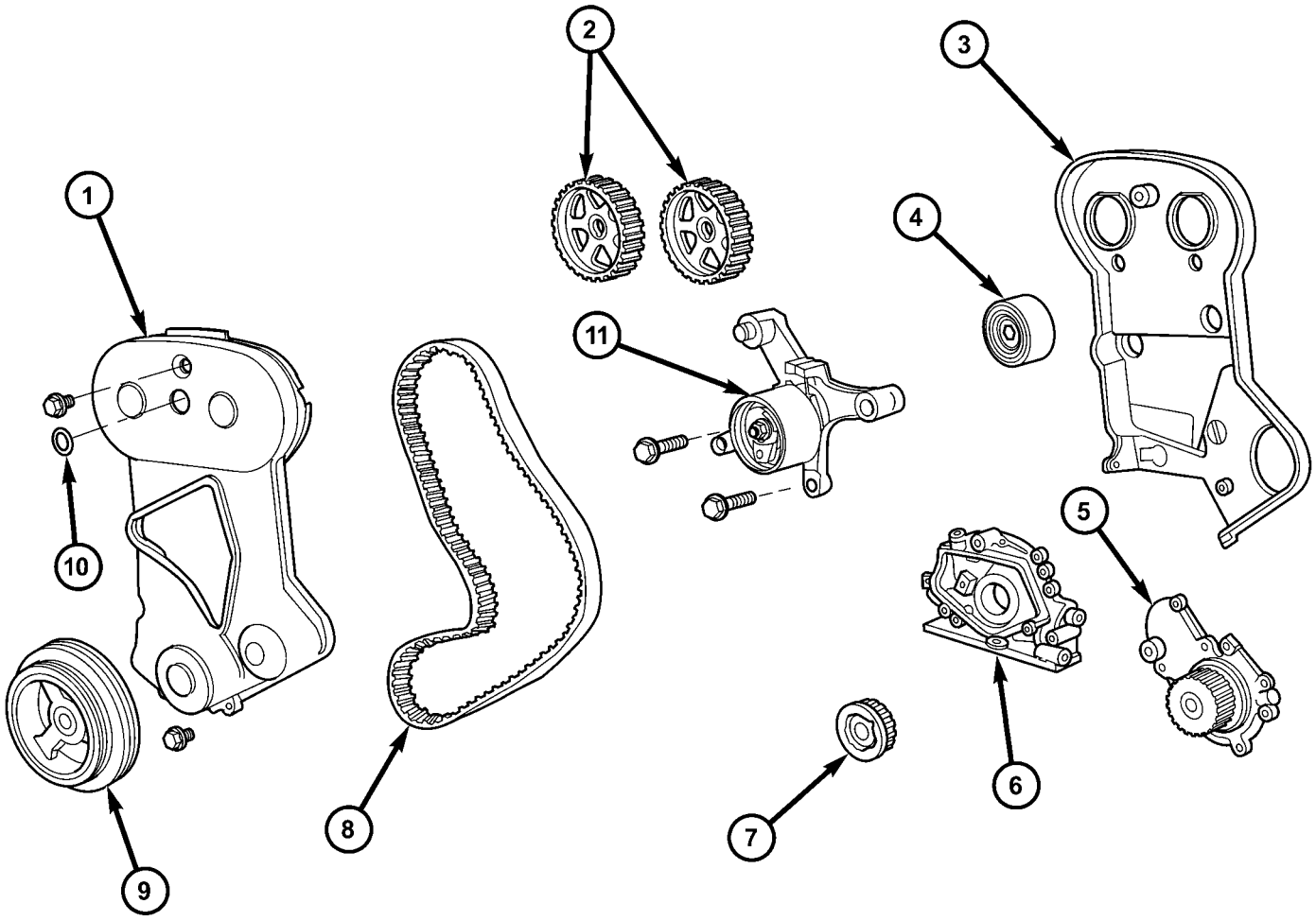

80f42fa2

Fig. 108 Timing Belt System - 2.0L DOHC

1 - FRONT TIMING BELT COVER
2 - CAMSHAFT SPROCKETS
3 - REAR TIMING BELT COVER
4 - IDLER PULLEY
5 - WATER PUMP
6 - OIL PUMP
7 - CRANKSHAFT SPROCKET
8 - TIMING BELT
9 - CRANKSHAFT DAMPER
10 - ACCESS PLUG
11 - TIMING BELT TENSIONER

TIMING BELT AND SPROCKETS (Continued)

(3) Rotate crankshaft until timing marks are aligned at both the camshafts and crankshaft (Fig. 109) and (Fig. 110).

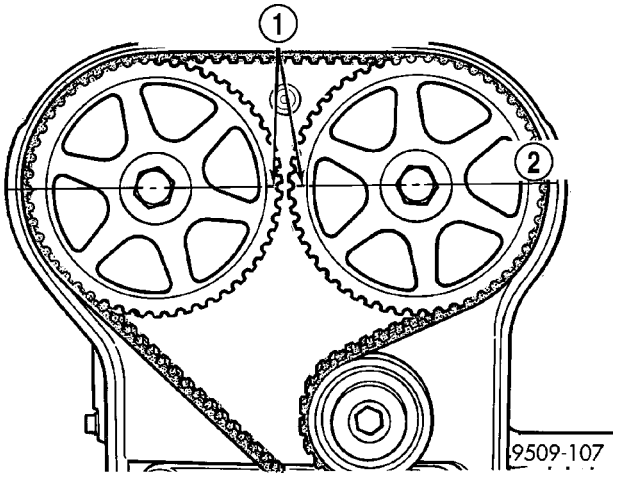

Fig. 109 Camshaft Timing Marks

1 - ALIGN CAMSHAFT SPROCKET TIMING MARKS TOGETHER
2 - CENTERLINE

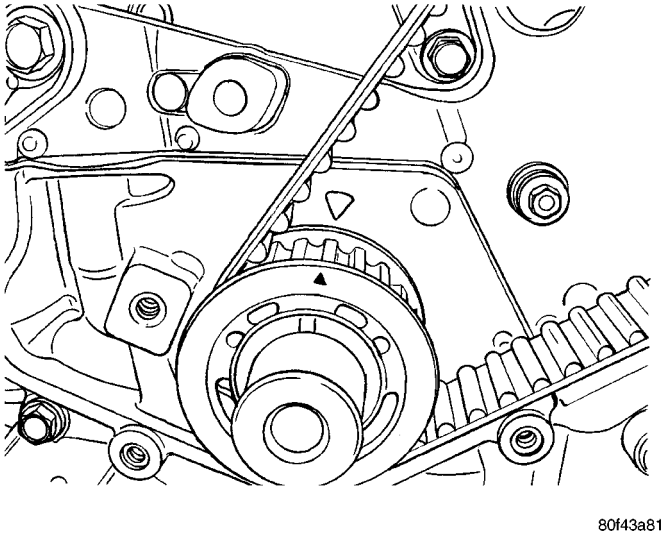

Fig. 110 Crankshaft Timing Mark Alignment

(4) Loosen timing belt tensioner lock nut (Fig. 111).

(5) Insert a 6 mm Allen wrench into the hexagon opening located on the top plate of the belt tensioner pulley. Rotate the top plate **CLOCKWISE** until there is enough slack in timing belt to allow for removal (Fig. 111).

(6) Remove timing belt.

CAUTION: Do not rotate the camshaft(s) once the timing belt has been removed or damage to valve components may occur.

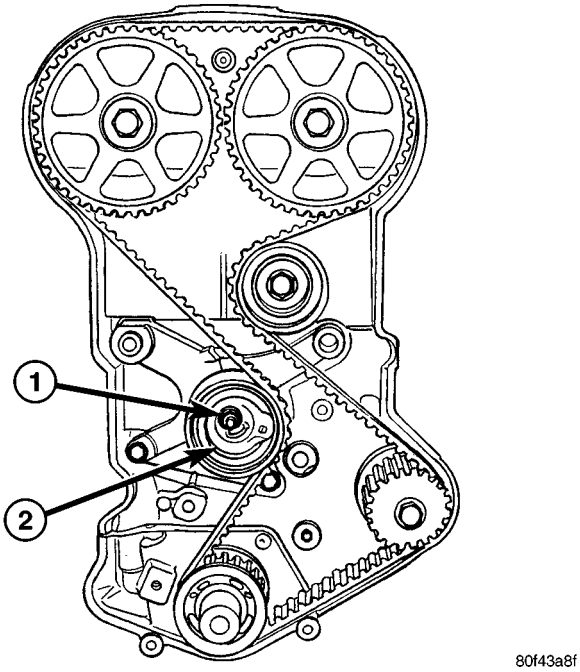

Fig. 111 Timing Belt Removal

1 - LOCK NUT
2 - TOP PLATE

REMOVAL - CAMSHAFT SPROCKET(S)

(1) Disconnect negative battery cable.

(2) Remove timing belt (Refer to 9 - ENGINE/VALVE TIMING/TIMING BELT AND SPROCKETS - REMOVAL).

(3) Hold camshaft sprockets with Special Tools C-4687 and Adaptor C-4687-1 (Fig. 112), while removing attaching bolts. Remove camshaft sprockets.

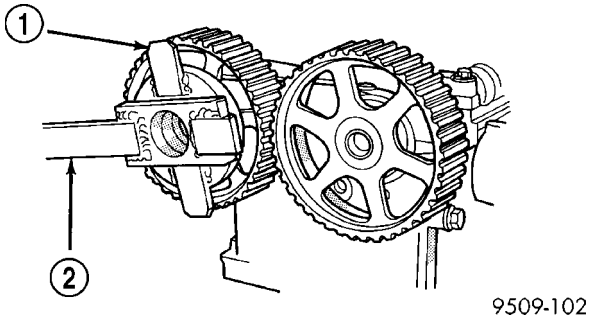

Fig. 112 Camshaft Sprocket - Removal/Installation

1 - ADAPTER C-4687–1
2 - SPECIAL TOOL C-4687

REMOVAL - CRANKSHAFT SPROCKET

(1) Disconnect negative battery cable.

(2) Remove timing belt (Refer to 9 - ENGINE/VALVE TIMING/TIMING BELT AND SPROCKETS - REMOVAL).

TIMING BELT AND SPROCKETS (Continued)

(3) Remove crankshaft sprocket using Special Tools 6793 and insert C-4685-C2 (Fig. 113).

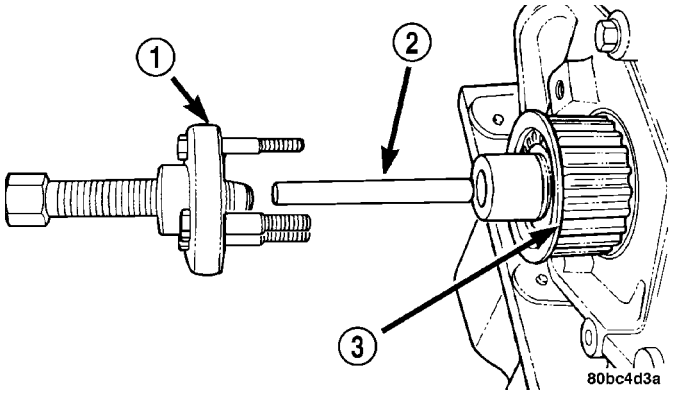

Fig. 113 Crankshaft Sprocket - Removal

1 - SPECIAL TOOL 6793
2 - SPECIAL TOOL C-4685–C2
3 - CRANKSHAFT SPROCKET

CLEANING

Do Not attempt to clean a timing belt. If contamination from oil, grease, or coolants have occurred, the timing belt should be replaced.

Clean all sprockets using a suitable solvent. Clean all sprocket grooves of any debris.

INSTALLATION

INSTALLATION - CRANKSHAFT SPROCKET

CAUTION: The crankshaft sprocket is set to a predetermined depth from the factory for correct timing belt tracking. If removed, use of Special Tool 6792 is required to set the sprocket to original installation depth. An incorrectly installed sprocket will result in timing belt and engine damage.

(1) Install crankshaft sprocket using Special Tool 6792 (Fig. 114).

(2) Install timing belt (Refer to 9 - ENGINE/ VALVE TIMING/TIMING BELT AND SPROCKETS - INSTALLATION).

(3) Connect negative battery cable.

INSTALLATION - CAMSHAFT SPROCKETS

(1) Install camshaft sprockets. Hold camshaft sprockets with Special Tools C-4687 and Adaptor C-4687-1 while tightening center bolts to 115 N·m (85 ft. lbs.) (Fig. 112).

(2) Install timing belt (Refer to 9 - ENGINE/ VALVE TIMING/TIMING BELT AND SPROCKETS - INSTALLATION).

(3) Connect negative battery cable.

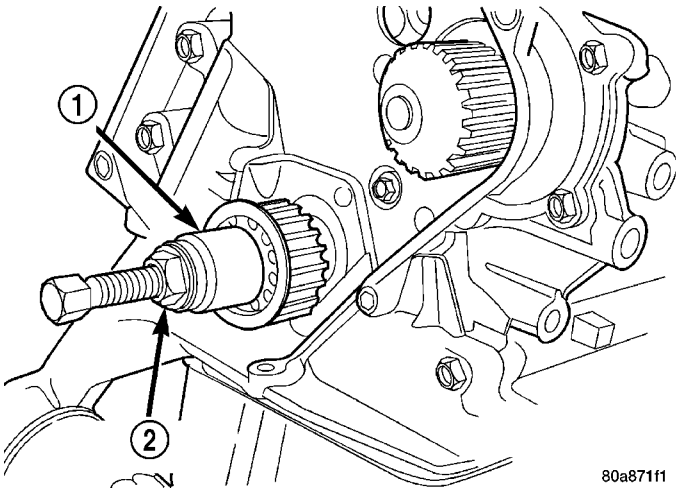

Fig. 114 Crankshaft Sprocket—Installation

1 - SPECIAL TOOL 6792
2 - TIGHTEN NUT TO INSTALL

INSTALLATION - TIMING BELT

(1) Set crankshaft sprocket to TDC by aligning the sprocket with the arrow on the oil pump housing, then back off to 3 notches before TDC (Fig. 115).

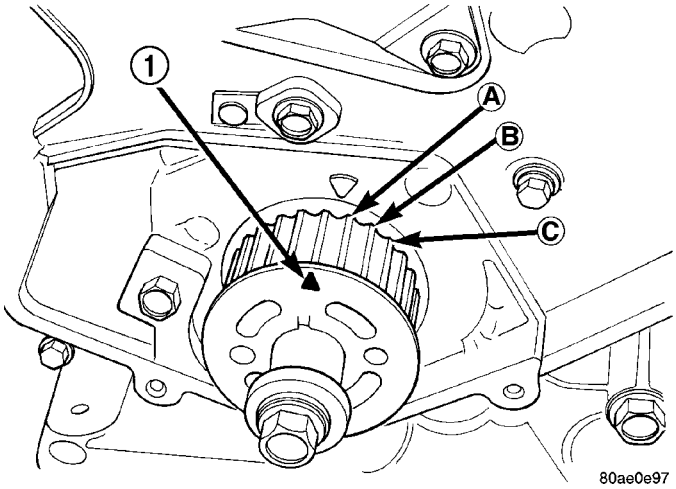

Fig. 115 Crankshaft Sprocket Timing

1 - TDC MARK

TIMING BELT AND SPROCKETS (Continued)

(2) Set camshafts timing marks together by aligning notches on sprockets (Fig. 116).

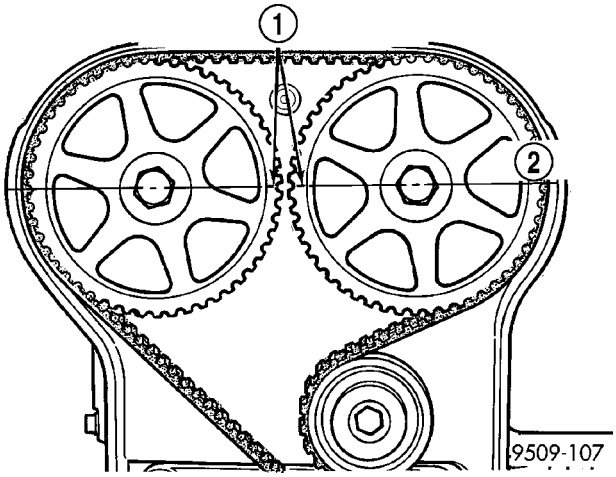

Fig. 116 Camshaft Timing Marks

1 - ALIGN CAMSHAFT SPROCKET TIMING MARKS TOGETHER
2 - CENTERLINE

(3) Rotate crankshaft 1/2 tooth counterclockwise from TDC (Fig. 117).

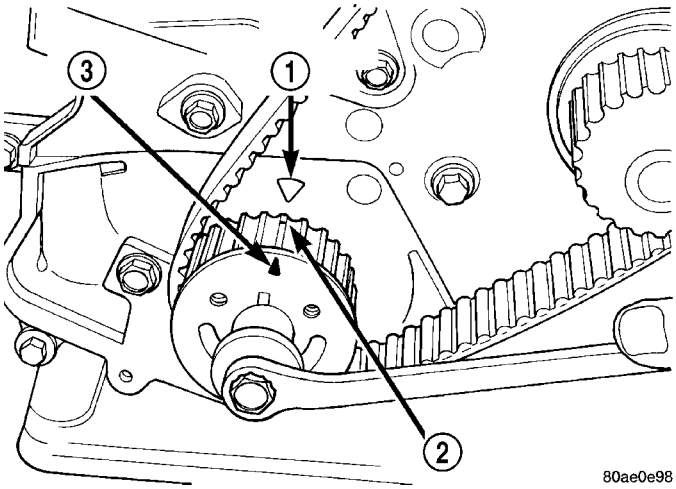

Fig. 117 Adjusting Crankshaft Sprocket for Timing Belt

1 - TDC REFERENCE MARK
2 - 1/2 NOTCH LOCATION
3 - TDC MARK

(4) Install the timing belt. Starting at the crankshaft, go around the water pump sprocket, idler pulley, camshaft sprockets, and finally route the back side of the timing belt around the timing belt tensioner pulley.

(5) Move crankshaft sprocket to TDC to take up belt slack.

(6) Insert a 6 mm Allen wrench into the hexagon opening located on the top plate of the belt tensioner pulley. Rotate the top plate **COUNTERCLOCKWISE**. The tensioner pulley will move against the belt and the tensioner setting notch will eventually start to move clockwise. Watching the movement of the setting notch, continue rotating the top plate counterclockwise until the setting notch is aligned with the spring tang (Fig. 118). Using the allen wrench to prevent the top plate from moving, torque the tensioner lock nut to 30 N·m (22 ft. lbs.). Setting notch and spring tang should remain aligned after lock nut is torqued.

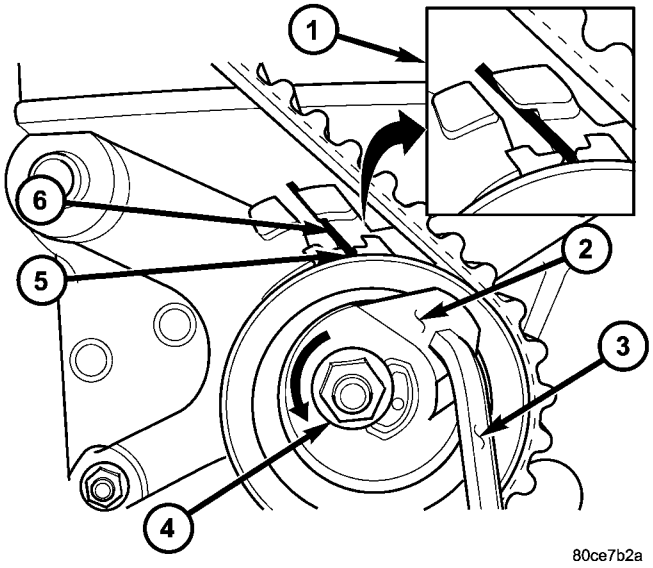

Fig. 118 Timing Belt Tension Adjustment

1 - ALIGN SETTING NOTCH WITH SPRING TANG
2 - TOP PLATE
3 - 6mm ALLEN WRENCH
4 - LOCK NUT
5 - SETTING NOTCH
6 - SPRING TANG

(7) Remove allen wrench and torque wrench.

NOTE: Repositioning the crankshaft to the TDC position must be done only during the CLOCKWISE rotation movement. If TDC is missed, rotate a further two revolutions until TDC is achieved. DO NOT rotate crankshaft counterclockwise as this will make verification of proper tensioner setting impossible.

TIMING BELT AND SPROCKETS (Continued)

(8) Rotate the crankshaft CLOCKWISE two complete revolutions manually for seating of the belt, until the crankshaft is repositioned at the TDC position. Verify that the camshaft and crankshaft timing marks are in proper position.

(9) Check if the spring tang is within the tolerance window (Fig. 119). If the spring tang is within the tolerance window, the installation process is complete and nothing further is required. If the spring tang is not within the tolerance window, repeat Steps 6 through 8.

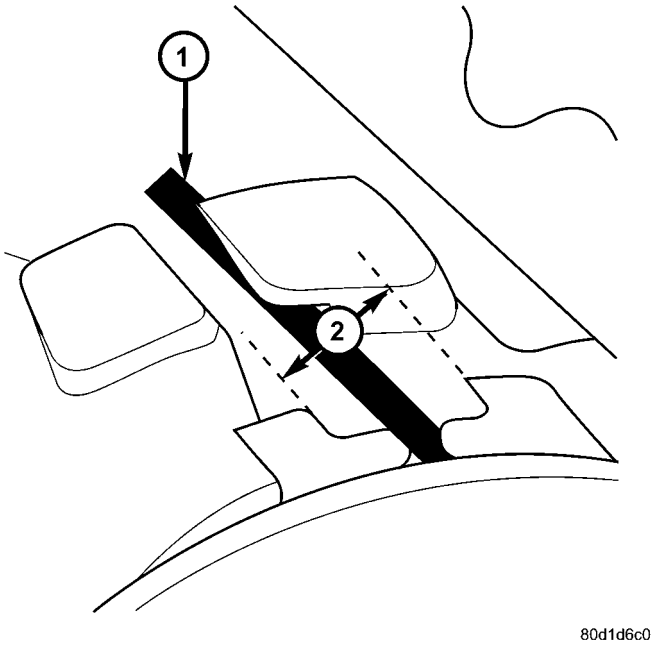

Fig. 119 Timing Belt Tension Verification

1 - SPRING TANG
2 - TOLERANCE WINDOW

(10) Install the front timing belt cover (Fig. 108) (Refer to 9 - ENGINE/VALVE TIMING/TIMING BELT COVER(S) - INSTALLATION).

(11) Connect negative battery cable.

TIMING BELT TENSIONER & PULLEY

REMOVAL

(1) Remove the timing belt (Refer to 9 - ENGINE/VALVE TIMING/TIMING BELT AND SPROCKETS - REMOVAL).

(2) Remove bolts attaching the timing belt tensioner assembly to engine.

(3) Remove the timing belt tensioner assembly (Fig. 120).

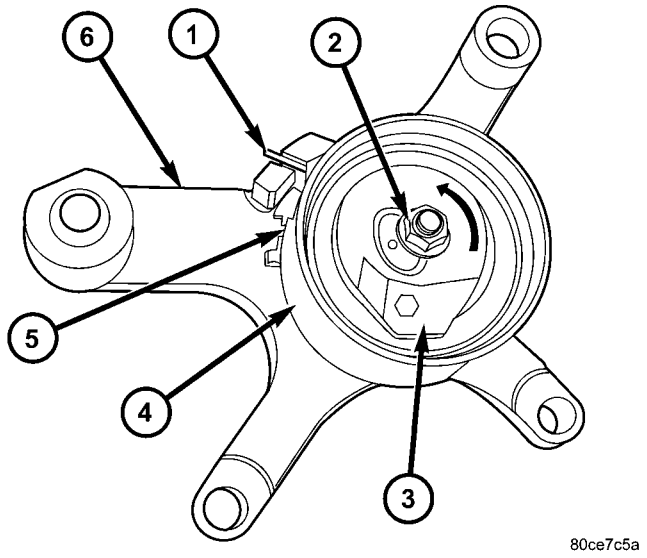

Fig. 120 Timing Belt Tensioner Assembly

1 - SPRING TANG
2 - LOCK NUT
3 - TOP PLATE
4 - PULLEY
5 - SETTING NOTCH
6 - BRACKET

INSTALLATION

(1) Position timing belt tensioner assembly to the engine. To ensure proper alignment of tensioner to engine block, temporarily install the engine mount bracket bolts into the upper holes of the timing belt tensioner. Install timing belt tensioner lower mounting bolts. Tighten lower mounting bolts to 31 N·m (23 ft. lbs.). Remove temporarily installed engine mount bracket bolts.

(2) Install the timing belt (Refer to 9 - ENGINE/VALVE TIMING/TIMING BELT AND SPROCKETS - INSTALLATION).

ENGINE 2.4L DOHC

TABLE OF CONTENTS

page

ENGINE 2.4L DOHC
DESCRIPTION 73
DIAGNOSIS AND TESTING
DIAGNOSIS AND TESTING - ENGINE DIAGNOSIS - INTRODUCTION 73
DIAGNOSIS AND TESTING - ENGINE DIAGNOSIS - PERFORMANCE 74
DIAGNOSIS AND TESTING - ENGINE DIAGNOSIS - MECHANICAL 76
DIAGNOSIS AND TESTING - CYLINDER COMPRESSION PRESSURE TEST 78
DIAGNOSIS AND TESTING - CYLINDER COMBUSTION PRESSURE LEAKAGE TEST 78
DIAGNOSIS AND TESTING - ENGINE OIL LEAK INSPECTION 78
STANDARD PROCEDURE
STANDARD PROCEDURE - REPAIR OF DAMAGED OR WORN THREADS 79
STANDARD PROCEDURE - HYDROSTATIC LOCKED ENGINE 79
STANDARD PROCEDURE - FORM-IN-PLACE GASKETS AND SEALERS 80
STANDARD PROCEDURE - ENGINE GASKET SURFACE PREPARATION 81
STANDARD PROCEDURE - MEASURING BEARING CLEARANCE USING PLASTIGAGE 81
STANDARD PROCEDURE - ENGINE CORE AND OIL GALLERY PLUGS 82
REMOVAL - ENGINE ASSEMBLY 82
INSTALLATION - ENGINE ASSEMBLY 83
SPECIFICATIONS
2.4L ENGINE 85
TORQUE 88
SPECIAL TOOLS
2.4L ENGINE 89
AIR CLEANER ELEMENT
REMOVAL 92
INSTALLATION 92
AIR CLEANER HOUSING
REMOVAL 92
INSTALLATION 92
CYLINDER HEAD
DESCRIPTION 92
DIAGNOSIS AND TESTING—CYLINDER HEAD GASKET 92
REMOVAL - CYLINDER HEAD 93
CLEANING 94
INSPECTION 94
INSTALLATION - CYLINDER HEAD 95
CAMSHAFT OIL SEAL(S)
REMOVAL 95
INSTALLATION 96
CAMSHAFT(S)
DESCRIPTION 96
OPERATION 96
STANDARD PROCEDURE - MEASURING CAMSHAFT END PLAY 96
REMOVAL 97
CLEANING 97
INSPECTION 97
INSTALLATION 98
CYLINDER HEAD COVER
REMOVAL 99
CLEANING 99
INSPECTION 99
INSTALLATION 99
HYDRAULIC LASH ADJUSTERS
DIAGNOSIS AND TESTING
HYDRAULIC LASH ADJUSTER NOISE DIAGNOSIS 99
REMOVAL 100
INSTALLATION 100
INTAKE/EXHAUST VALVES & SEATS
DESCRIPTION 100
OPERATION 100
CLEANING 100
ROCKER ARMS
REMOVAL 100
INSPECTION 101
INSTALLATION 101
VALVE SPRINGS & SEALS
REMOVAL
REMOVAL - CYLINDER HEAD ON 101
REMOVAL - CYLINDER HEAD OFF 102
INSPECTION 102
INSTALLATION
INSTALLATION - CYLINDER HEAD ON 102
INSTALLATION - CYLINDER HEAD OFF . . . 102
ENGINE BLOCK
DESCRIPTION 103
STANDARD PROCEDURE - CYLINDER BORE HONING 103
CLEANING 104
INSPECTION 104

CRANKSHAFT
STANDARD PROCEDURE - MEASURING CRANKSHAFT END PLAY . . . 104
REMOVAL - CRANKSHAFT . . . 104
INSPECTION . . . 105
INSTALLATION - CRANKSHAFT . . . 106
CRANKSHAFT OIL SEAL - FRONT
REMOVAL . . . 108
INSTALLATION . . . 108
CRANKSHAFT OIL SEAL - REAR
REMOVAL . . . 109
INSTALLATION . . . 109
FLEX PLATE
REMOVAL . . . 111
INSTALLATION . . . 111
PISTON & CONNECTING ROD
DESCRIPTION . . . 111
STANDARD PROCEDURE - PISTON TO CYLINDER BORE FITTING . . . 111
REMOVAL . . . 112
INSTALLATION . . . 113
CONNECTING ROD BEARINGS
STANDARD PROCEDURE CONNECTING ROD - FITTING . . . 113
PISTON RINGS
STANDARD PROCEDURE PISTON RING - FITTING . . . 114
REMOVAL . . . 114
INSTALLATION . . . 114
VIBRATION DAMPER
REMOVAL . . . 115
INSTALLATION . . . 116
STRUCTURAL COLLAR
REMOVAL . . . 117
INSTALLATION . . . 117
ENGINE MOUNTING
ADJUSTMENTS
ENGINE SUPPORT ADJUSTMENT . . . 117
LEFT MOUNT
REMOVAL . . . 118
INSTALLATION . . . 118
REAR MOUNT
REMOVAL . . . 118
INSTALLATION . . . 118
RIGHT MOUNT
REMOVAL . . . 119
INSTALLATION . . . 119
FRONT MOUNT
REMOVAL . . . 119
INSTALLATION . . . 119
LUBRICATION
DESCRIPTION . . . 120
OPERATION . . . 121
DIAGNOSIS AND TESTING - CHECKING ENGINE OIL PRESSURE . . . 121
OIL
STANDARD PROCEDURE
ENGINE OIL LEVEL CHECK . . . 121
STANDARD PROCEDURE - ENGINE OIL AND FILTER CHANGE . . . 121
OIL FILTER
DESCRIPTION . . . 123
REMOVAL . . . 123
INSTALLATION . . . 123
OIL PAN
REMOVAL . . . 123
INSTALLATION . . . 123
OIL PRESSURE SENSOR/SWITCH
REMOVAL . . . 124
INSTALLATION . . . 124
OIL PUMP
REMOVAL . . . 124
DISASSEMBLY . . . 124
CLEANING . . . 124
INSPECTION . . . 125
ASSEMBLY . . . 127
INSTALLATION . . . 127
INTAKE MANIFOLD
DIAGNOSIS AND TESTING - INTAKE MANIFOLD LEAKS . . . 128
REMOVAL . . . 128
CLEANING . . . 129
INSPECTION . . . 129
INSTALLATION . . . 129
EXHAUST MANIFOLD
REMOVAL . . . 130
CLEANING . . . 130
INSPECTION . . . 130
INSTALLATION . . . 130
TIMING BELT COVER(S)
REMOVAL . . . 130
INSTALLATION . . . 132
TIMING BELT AND SPROCKET(S)
REMOVAL
REMOVAL - TIMING BELT . . . 132
REMOVAL - CAMSHAFT SPROCKETS . . . 133
REMOVAL - CRANKSHAFT SPROCKET . . . 133
CLEANING . . . 133
INSTALLATION
INSTALLATION - CRANKSHAFT SPROCKET . 134
INSTALLATION - CAMSHAFT SPROCKETS . 134
INSTALLATION - TIMING BELT . . . 134
TIMING BELT TENSIONER & PULLEY
REMOVAL . . . 136
INSTALLATION . . . 137
BALANCE SHAFTS AND CARRIER ASSEMBLY
DESCRIPTION . . . 138
OPERATION . . . 138
REMOVAL . . . 139
INSTALLATION . . . 140

ENGINE 2.4L DOHC

DESCRIPTION

The 2.4 Liter (148 cu. in.) in-line four cylinder engine is a double over head camshaft with hydraulic lifters and four valve per cylinder design (Fig. 1). The engine is free-wheeling; meaning it has provisions for piston-to-valve clearance. However valve-to-valve interference can occur, if camshafts are rotated independently.

The cylinders are numbered from front of the engine to the rear. The firing order is 1–3–4–2.

The engine identification number is located on the rear of the cylinder block (Fig. 2).

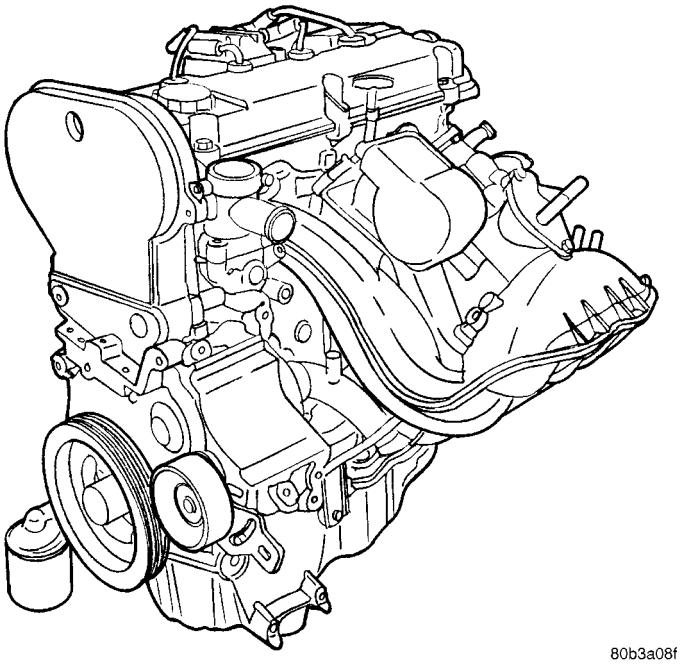

Fig. 1 2.4 Liter Engine

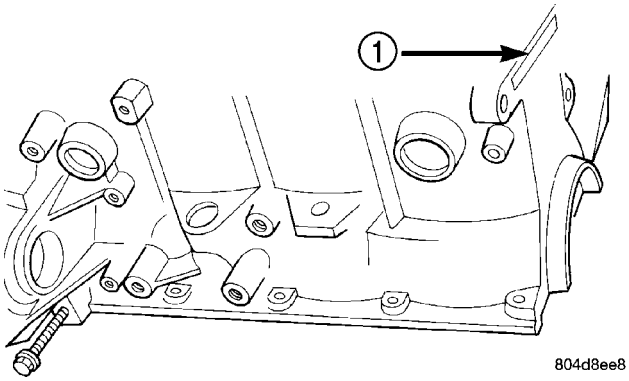

Fig. 2 Engine Identification

1 - ENGINE IDENTIFICATION LOCATION

DIAGNOSIS AND TESTING

DIAGNOSIS AND TESTING - ENGINE DIAGNOSIS - INTRODUCTION

Engine diagnosis is helpful in determining the causes of malfunctions not detected and remedied by routine maintenance.

These malfunctions may be classified as either mechanical (e.g., a strange noise), or performance (e.g., engine idles rough and stalls).

Refer to the Engine Mechanical and the Engine Performance diagnostic charts, for possible causes and corrections of malfunctions (Refer to 9 - ENGINE - DIAGNOSIS AND TESTING - MECHANICAL) (Refer to 9 - ENGINE - DIAGNOSIS AND TESTING - PERFORMANCE).

For fuel system diagnosis, (Refer to 14 - FUEL SYSTEM/FUEL DELIVERY - DIAGNOSIS AND TESTING).

Additional tests and diagnostic procedures may be necessary for specific engine malfunctions that cannot be isolated with the Service Diagnosis charts. Information concerning additional tests and diagnosis is provided within the following:

- Cylinder Compression Pressure Test
- Cylinder Combustion Pressure Leakage Test
- Engine Cylinder Head Gasket Failure Diagnosis
- Intake Manifold Leakage Diagnosis
- Hydraulic Lash Adjuster Noise Diagnosis
- Engine Oil Leak Inspection

ENGINE 2.4L DOHC (Continued)

DIAGNOSIS AND TESTING - ENGINE DIAGNOSIS - PERFORMANCE

CONDITION	POSSIBLE CAUSE	CORRECTION
ENGINE WILL NOT START	1. Weak battery.	1. Test battery. Charge or replace as necessary. (Refer to 8 - ELECTRICAL/BATTERY SYSTEM - DIAGNOSIS AND TESTING)
	2. Corroded or loose battery connections.	2. Clean and tighten battery connections. Apply a coat of light mineral grease to terminals.
	3. Faulty starter.	3. Test starting system. (Refer to 8 - ELECTRICAL/STARTING - DIAGNOSIS AND TESTING)
	4. Faulty coil(s) or control unit.	4. Test and replace as needed. (Refer to Appropriate Diagnostic Information)
	5. Incorrect spark plug gap.	5. Set gap. (Refer to 8 - ELECTRICAL/IGNITION CONTROL - SPECIFICATIONS)
	6. Contamination in fuel system.	6. Clean system and replace fuel filter.
	7. Faulty fuel pump.	7. Test fuel pump and replace as needed. (Refer to Appropriate Diagnostic Information)
	8. Incorrect engine timing.	8. Check for a skipped timing belt/chain.
ENGINE STALLS OR IDLES ROUGH	1. Idle speed too low.	1. Test minimum air flow. (Refer to Appropriate Diagnostic Information)
	2. Incorrect fuel mixture.	2. (Refer to Appropriate Diagnostic Information)
	3. Intake manifold leakage.	3. Inspect intake manifold, manifold gasket, and vacuum hoses.
	4. Faulty ignition coil(s).	4. Test and replace as necessary. (Refer to Appropriate Diagnostic Information)

ENGINE 2.4L DOHC (Continued)

CONDITION	POSSIBLE CAUSE	CORRECTION
ENGINE LOSS OF POWER	1. Dirty or incorrectly gapped plugs.	1. Clean plugs and set gap.
	2. Contamination in fuel system.	2. Clean system and replace fuel filter.
	3. Faulty fuel pump.	3. Test and replace as necessary. (Refer to Appropriate Diagnostic Information)
	4. Incorrect valve timing.	4. Correct valve timing.
	5. Leaking cylinder head gasket.	5. Replace cylinder head gasket.
	6. Low compression.	6. Test compression of each cylinder.
	7. Burned, warped, or pitted valves.	7. Replace valves.
	8. Plugged or restricted exhaust system.	8. Perform exhaust restriction test. (Refer to 11 - EXHAUST SYSTEM - DIAGNOSIS AND TESTING) Install new parts, as necessary.
	9. Faulty ignition coil(s).	9. Test and replace as necessary. (Refer to Appropriate Diagnostic Information)
ENGINE MISSES ON ACCELERATION	1. Dirty or incorrectly gapped spark plugs.	1. Clean spark plugs and set gap.
	2. Contamination in Fuel System.	2. Clean fuel system and replace fuel filter.
	3. Burned, warped, or pitted valves.	3. Replace valves.
	4. Faulty ignition coil(s).	4. Test and replace as necessary. (Refer to Appropriate Diagnostic Information)
ENGINE MISSES AT HIGH SPEED	1. Dirty or incorrect spark plug gap.	1. Clean spark plugs and set gap.
	2. Faulty ignition coil(s).	2. Test and replace as necessary. (Refer to Appropriate Diagnostic Information)
	3. Dirty fuel injector(s).	3. Test and replace as necessary. (Refer to Appropriate Diagnostic Information)
	4. Contamination in fuel system.	4. Clean system and replace fuel filter.

ENGINE 2.4L DOHC (Continued)

DIAGNOSIS AND TESTING - ENGINE DIAGNOSIS - MECHANICAL

CONDITION	POSSIBLE CAUSES	CORRECTION
NOISY VALVES	1. High or low oil level in crankcase.	1. Check and correct engine oil level.
	2. Thin or diluted oil.	2. Change oil to correct viscosity.
	3. Thick oil	3. (a) Change engine oil and filter. (b) Run engine to operating temperature. (c) Change engine oil and filter again.
	4. Low oil pressure.	4. Check and correct engine oil level.
	5. Dirt in tappets/lash adjusters.	5. Replace rocker arm/hydraulic lash adjuster assembly.
	6. Worn rocker arms.	6. Inspect oil supply to rocker arms.
	7. Worn tappets/lash adjusters.	7. Install new rocker arm/hydraulic lash adjuster assembly.
	8. Worn valve guides.	8. Ream guides and install new valves with oversize stems.
	9. Excessive runout of valve seats on valve faces.	9. Grind valve seats and valves.
	10. Missing adjuster pivot.	10. Replace rocker arm/hydraulic lash adjuster assembly.
CONNECTING ROD NOISE	1. Insufficient oil supply.	1. Check engine oil level.
	2. Low oil pressure.	2. Check engine oil level. Inspect oil pump relief valve and spring.
	3. Thin or diluted oil.	3. Change oil to correct viscosity.
	4. Thick oil	4. (a) Change engine oil and filter. (b) Run engine to operating temperature. (c) Change engine oil and filter again.
	5. Excessive bearing clearance.	5. Measure bearings for correct clearance. Repair as necessary.
	6. Connecting rod journal out-of-round.	6. Replace crankshaft or grind surface.
	7. Misaligned connecting rods.	7. Replace bent connecting rods.
MAIN BEARING NOISE	1. Insufficient oil supply.	1. Check engine oil level.
	2. Low oil pressure.	2. Check engine oil level. Inspect oil pump relief valve and spring.
	3. Thin or diluted oil.	3. Change oil to correct viscosity.
	4. Thick oil	4. (a) Change engine oil and filter. (b) Run engine to operating temperature. (c) Change engine oil and filter again.
	5. Excessive bearing clearance.	5. Measure bearings for correct clearance. Repair as necessary.
	6. Excessive end play.	6. Check thrust bearing for wear on flanges.
	7. Crankshaft journal out-of-round or worn.	7. Replace crankshaft or grind journals.
	8. Loose flywheel or torque converter.	8. Tighten to correct torque.

ENGINE 2.4L DOHC (Continued)

CONDITION	POSSIBLE CAUSES	CORRECTION
OIL PRESSURE DROP	1. Low oil level.	1. Check engine oil level.
	2. Faulty oil pressure sending unit.	2. Install new sending unit.
	3. Low oil pressure.	3. Check sending unit and main bearing oil clearance.
	4. Clogged oil filter.	4. Install new oil filter.
	5. Worn parts in oil pump.	5. Replace worn parts or pump.
	6. Thin or diluted oil.	6. Change oil to correct viscosity.
	7. Oil pump relief valve stuck.	7. Remove valve and inspect, clean, or replace.
	8. Oil pump suction tube loose.	8. Remove oil pan and install new tube or clean, if necessary.
	9. Oil pump cover warped or cracked.	9. Install new oil pump.
	10. Excessive bearing clearance.	10. Measure bearings for correct clearance.
OIL LEAKS	1. Misaligned or deteriorated gaskets.	1. Replace gasket(s).
	2. Loose fastener, broken or porous metal part.	2. Tighten, repair or replace the part.
	3. Misaligned or deteriorated cup or threaded plug.	3. Replace as necessary.
OIL CONSUMPTION OR SPARK PLUGS FOULED	1. PCV system malfunction.	1. Check system and repair as necessary. (Refer to 25 - EMISSIONS CONTROL/EVAPORATIVE EMISSIONS/ PCV VALVE - DIAGNOSIS AND TESTING)
	2. Worn, scuffed or broken rings.	2. Hone cylinder bores. Install new rings.
	3. Carbon in oil ring slots.	3. Install new rings.
	4. Rings fitted too tightly in grooves.	4. Remove rings and check grooves. If groove is not proper width, replace piston.
	5. Worn valve guide(s).	5. Ream guide(s) and replace valve(s) with oversize valve(s) and seal(s).
	6. Valve stem seal(s) worn or damaged.	6. Replace seal(s).

ENGINE 2.4L DOHC (Continued)

DIAGNOSIS AND TESTING - CYLINDER COMPRESSION PRESSURE TEST

The results of a cylinder compression pressure test can be utilized to diagnose several engine malfunctions.

Ensure the battery is completely charged and the engine starter motor is in good operating condition. Otherwise the indicated compression pressures may not be valid for diagnosis purposes.

(1) Check engine oil level and add oil if necessary.

(2) Drive the vehicle until engine reaches normal operating temperature. Select a route free from traffic and other forms of congestion, observe all traffic laws, and accelerate through the gears several times briskly.

(3) Remove all spark plugs from engine. As spark plugs are being removed, check electrodes for abnormal firing indicators fouled, hot, oily, etc. Record cylinder number of spark plug for future reference.

(4) Remove the Auto Shutdown (ASD) relay from the PDC.

(5) Be sure throttle blade is fully open during the compression check.

(6) Insert compression gauge adaptor Special Tool 8116 or the equivalent, into the #1 spark plug hole in cylinder head. Connect the 0–500 psi (Blue) pressure transducer (Special Tool CH7059) with cable adaptors to the DRBIII®. For Special Tool identification, (Refer to 9 - ENGINE - SPECIAL TOOLS).

(7) Crank engine until maximum pressure is reached on gauge. Record this pressure as #1 cylinder pressure.

(8) Repeat the previous step for all remaining cylinders.

(9) Compression should not be less than 689 kPa (100 psi) and not vary more than 25 percent from cylinder to cylinder.

(10) If one or more cylinders have abnormally low compression pressures, repeat the compression test.

(11) If the same cylinder or cylinders repeat an abnormally low reading on the second compression test, it could indicate the existence of a problem in the cylinder in question. **The recommended compression pressures are to be used only as a guide to diagnosing engine problems. An engine should not be disassembled to determine the cause of low compression unless some malfunction is present.**

DIAGNOSIS AND TESTING - CYLINDER COMBUSTION PRESSURE LEAKAGE TEST

The combustion pressure leakage test provides an accurate means for determining engine condition.

Combustion pressure leakage testing will detect:

- Exhaust and intake valve leaks (improper seating).
- Leaks between adjacent cylinders or into water jacket.
- Any causes for combustion/compression pressure loss.

WARNING: DO NOT REMOVE THE PRESSURE CAP WITH THE SYSTEM HOT AND UNDER PRESSURE BECAUSE SERIOUS BURNS FROM COOLANT CAN OCCUR.

Check the coolant level and fill as required. DO NOT install the pressure cap.

Start and operate the engine until it attains normal operating temperature, then turn the engine OFF.

Clean spark plug recesses with compressed air.

Remove the spark plugs.

Remove the oil filler cap.

Remove the air cleaner.

Calibrate the tester according to the manufacturer's instructions. The shop air source for testing should maintain 483 kPa (70 psi) minimum, 1,379 kPa (200 psi) maximum, with 552 kPa (80 psi) recommended.

Perform the test procedures on each cylinder according to the tester manufacturer's instructions. While testing, listen for pressurized air escaping through the throttle body, tailpipe and oil filler cap opening. Check for bubbles in the coolant.

All gauge pressure indications should be equal, with no more than 25% leakage per cylinder.

FOR EXAMPLE: At 552 kPa (80 psi) input pressure, a minimum of 414 kPa (60 psi) should be maintained in the cylinder.

DIAGNOSIS AND TESTING - ENGINE OIL LEAK INSPECTION

Begin with a thorough visual inspection of the engine, particularly at the area of the suspected leak. If an oil leak source is not readily identifiable, the following steps should be followed:

(1) Do not clean or degrease the engine at this time because some solvents may cause rubber to swell, temporarily stopping the leak.

(2) Add an oil soluble dye (use as recommended by manufacturer). Start the engine and let idle for approximately 15 minutes. Check the oil dipstick to make sure the dye is thoroughly mixed as indicated with a bright yellow color under a black light.

(3) Using a black light, inspect the entire engine for fluorescent dye, particularly at the suspected area of oil leak. If the oil leak is found and identified, repair as necessary.

(4) If dye is not observed, drive the vehicle at various speeds for approximately 24 km (15 miles), and repeat inspection.

ENGINE 2.4L DOHC (Continued)

(5) **If the oil leak source is not positively identified at this time**, proceed with the air leak detection test method as follows:

- Disconnect the fresh air hose (make-up air) at the cylinder head cover and plug or cap the nipple on the cover.
- Remove the PCV valve hose from the cylinder head cover. Cap or plug the PCV valve nipple on the cover.
- Attach an air hose with pressure gauge and regulator to the dipstick tube.

CAUTION: Do not subject the engine assembly to more than 20.6 kpa (3 PSI) of test pressure.

- Gradually apply air pressure from 1 psi to 2.5 psi maximum while applying soapy water at the suspected source. Adjust the regulator to the suitable test pressure that provides the best bubbles which will pinpoint the leak source. If the oil leak is detected and identified, repair per service manual procedures.
- If the leakage occurs at the crankshaft rear oil seal area, refer to the section, Inspection for Rear Seal Area Leak.

(6) If no leaks are detected, turn off the air supply. Remove the air hose, all plugs, and caps. Install the PCV valve and fresh air hose (make-up air). Proceed to next step.

(7) Clean the oil off the suspect oil leak area using a suitable solvent. Drive the vehicle at various speeds approximately 24 km (15 miles). Inspect the engine for signs of an oil leak by using a black light.

NOTE: If oil leakage is observed at the dipstick tube to block location; remove the tube, clean and reseal using Mopar® Stud & Bearing Mount (press fit tube applications only), and for O-ring style tubes, remove tube and replace the O-ring seal.

INSPECTION FOR REAR SEAL AREA LEAKS

Since it is sometimes difficult to determine the source of an oil leak in the rear seal area of the engine, a more involved inspection is necessary. The following steps should be followed to help pinpoint the source of the leak.

If the leakage occurs at the crankshaft rear oil seal area:

(1) Disconnect the battery.

(2) Raise the vehicle.

(3) Remove torque converter or clutch housing cover and inspect rear of block for evidence of oil. Use a black light to check for the oil leak. If a leak is present in this area, remove transmission for further inspection.

(a) Circular spray pattern generally indicates seal leakage or crankshaft damage.

(b) Where leakage tends to run straight down, possible causes are a porous block, oil gallery cup plug, bedplate to cylinder block mating surfaces and seal bore. See proper repair procedures for these items.

(4) If no leaks are detected, pressurize the crankcase as previously described.

CAUTION: Do not exceed 20.6 kPa (3 psi).

(5) If the leak is not detected, very slowly turn the crankshaft and watch for leakage. If a leak is detected between the crankshaft and seal while slowly turning the crankshaft, it is possible the crankshaft seal surface is damaged. The seal area on the crankshaft could have minor nicks or scratches that can be polished out with emery cloth.

CAUTION: Use extreme caution when crankshaft polishing is necessary to remove minor nicks and scratches. The crankshaft seal flange is especially machined to complement the function of the rear oil seal.

(6) For bubbles that remain steady with shaft rotation, no further inspection can be done until disassembled.

(7) After the oil leak root cause and appropriate corrective action have been identified, replace component(s) as necessary.

STANDARD PROCEDURE

STANDARD PROCEDURE - REPAIR OF DAMAGED OR WORN THREADS

Damaged or worn threads (excluding spark plug and camshaft bearing cap attaching threads) can be repaired. Essentially, this repair consists of drilling out worn or damaged threads, tapping the hole with a special Heli-Coil Tap, (or equivalent) and installing an insert into the tapped hole. This brings the hole back to its original thread size.

CAUTION: Be sure that the tapped holes maintain the original center line.

Heli-Coil tools and inserts are readily available from automotive parts jobbers.

STANDARD PROCEDURE - HYDROSTATIC LOCKED ENGINE

When an engine is suspected to be hydrostatically locked, regardless of what caused the problem, the following steps should be used.

ENGINE 2.4L DOHC (Continued)

CAUTION: DO NOT use starter motor to rotate the engine, severe damage may occur.

(1) Inspect air cleaner, induction system and intake manifold to insure system is dry and clear of foreign material.
(2) Remove negative battery cable.
(3) Place a shop towel around the spark plugs when removing them from the engine. This will catch any fluid that may possibly be in the cylinder under pressure.
(4) With all spark plugs removed, rotate engine crankshaft using a breaker bar and socket.
(5) Identify the fluid in the cylinder(s) (i.e., coolant, fuel, oil or other).
(6) Make sure all fluid has been removed from the cylinders. Inspect engine for damage (i.e., connecting rods, pistons, valves, etc.)
(7) Repair engine or components as necessary to prevent this problem from re-occurring.

CAUTION: Squirt approximately one teaspoon of oil into the cylinders, rotate engine to lubricate the cylinder walls to prevent damage on restart.

(8) Install new spark plugs.
(9) Drain engine oil and remove oil filter.
(10) Install a new oil filter.
(11) Fill engine with specified amount of approved oil.
(12) Connect negative battery cable.
(13) Start engine and check for any leaks.

STANDARD PROCEDURE - FORM-IN-PLACE GASKETS AND SEALERS

There are numerous places where form-in-place gaskets are used on the engine. Care must be taken when applying form-in-place gaskets to assure obtaining the desired results. **Do not use form-in-place gasket material unless specified.** Bead size, continuity, and location are of great importance. Too thin a bead can result in leakage while too much can result in spill-over which can break off and obstruct fluid feed lines. A continuous bead of the proper width is essential to obtain a leak-free gasket.

There are numerous types of form-in-place gasket materials that are used in the engine area. Mopar® Engine RTV GEN II, Mopar® ATF-RTV, and Mopar® Gasket Maker gasket materials, each have different properties and can not be used in place of the other.

MOPAR® ENGINE RTV GEN II is used to seal components exposed to engine oil. This material is a specially designed black silicone rubber RTV that retains adhesion and sealing properties when exposed to engine oil. Moisture in the air causes the material to cure. This material is available in three ounce tubes and has a shelf life of one year. After one year this material will not properly cure. Always inspect the package for the expiration date before use.

MOPAR® ATF RTV is a specifically designed black silicone rubber RTV that retains adhesion and sealing properties to seal components exposed to automatic transmission fluid, engine coolants, and moisture. This material is available in three ounce tubes and has a shelf life of one year. After one year this material will not properly cure. Always inspect the package for the expiration date before use.

MOPAR® GASKET MAKER is an anaerobic type gasket material. The material cures in the absence of air when squeezed between two metallic surfaces. It will not cure if left in the uncovered tube. The anaerobic material is for use between two machined surfaces. Do not use on flexible metal flanges.

MOPAR® BED PLATE SEALANT is a unique (green-in-color) anaerobic type gasket material that is specially made to seal the area between the bedplate and cylinder block without disturbing the bearing clearance or alignment of these components. The material cures slowly in the absence of air when torqued between two metallic surfaces, and will rapidly cure when heat is applied.

MOPAR® GASKET SEALANT is a slow drying, permanently soft sealer. This material is recommended for sealing threaded fittings and gaskets against leakage of oil and coolant. Can be used on threaded and machined parts under all temperatures. This material is used on engines with multilayer steel (MLS) cylinder head gaskets. This material also will prevent corrosion. Mopar® Gasket Sealant is available in a 13 oz. aerosol can or 4oz./16 oz. can w/applicator.

SEALER APPLICATION

Mopar® Gasket Maker material should be applied sparingly 1 mm (0.040 in.) diameter or less of sealant to one gasket surface. Be certain the material surrounds each mounting hole. Excess material can easily be wiped off. Components should be torqued in place within 15 minutes. The use of a locating dowel is recommended during assembly to prevent smearing material off the location.

Mopar® Engine RTV GEN II or ATF RTV gasket material should be applied in a continuous bead approximately 3 mm (0.120 in.) in diameter. All mounting holes must be circled. For corner sealing, a 3.17 or 6.35 mm (1/8 or 1/4 in.) drop is placed in the center of the gasket contact area. Uncured sealant may be removed with a shop towel. Components should be torqued in place while the sealant is still wet to the touch (within 10 minutes). The usage of a locating dowel is recommended during assembly to prevent smearing material off the location.

ENGINE 2.4L DOHC (Continued)

Mopar® Gasket Sealant in an aerosol can should be applied using a thin, even coat sprayed completely over both surfaces to be joined, and both sides of a gasket. Then proceed with assembly. Material in a can w/applicator can be brushed on evenly over the sealing surfaces. Material in an aerosol can should be used on engines with multi-layer steel gaskets.

STANDARD PROCEDURE - ENGINE GASKET SURFACE PREPARATION

To ensure engine gasket sealing, proper surface preparation must be performed, especially with the use of aluminum engine components and multi-layer steel cylinder head gaskets.

Never use the following to clean gasket surfaces:

- Metal scraper
- Abrasive pad or paper to clean cylinder block and head
- High speed power tool with an abrasive pad or a wire brush (Fig. 3)

NOTE: Multi-Layer Steel (MLS) head gaskets require a scratch free sealing surface.

Only use the following for cleaning gasket surfaces:

- Solvent or a commercially available gasket remover
- Plastic or wood scraper (Fig. 3)
- Drill motor with 3M Roloc™ Bristle Disc (white or yellow) (Fig. 3)

CAUTION: Excessive pressure or high RPM (beyond the recommended speed), can damage the sealing surfaces. The mild (white, 120 grit) bristle disc is recommended. If necessary, the medium (yellow, 80 grit) bristle disc may be used on cast iron surfaces with care.

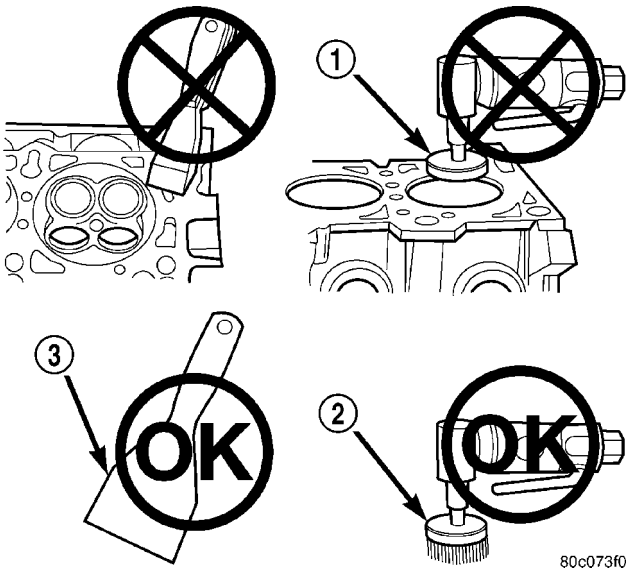

Fig. 3 Proper Tool Usage For Surface Preparation

1 - ABRASIVE PAD
2 - 3M ROLOC™ BRISTLE DISC
3 - PLASTIC/WOOD SCRAPER

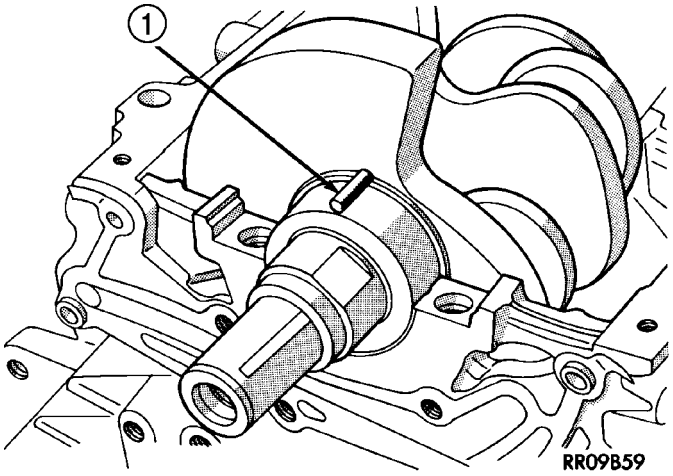

Fig. 4 Plastigage Placed in Lower Shell—Typical

1 - PLASTIGAGE

STANDARD PROCEDURE - MEASURING BEARING CLEARANCE USING PLASTIGAGE

Engine crankshaft bearing clearances can be determined by use of Plastigage or equivalent. The following is the recommended procedure for the use of Plastigage:

(1) Remove oil film from surface to be checked. Plastigage is soluble in oil.

(2) Place a piece of Plastigage across the entire width of the bearing shell in the cap approximately 6.35 mm (1/4 in.) off center and away from the oil holes (Fig. 4). (In addition, suspected areas can be checked by placing the Plastigage in the suspected area). Torque the bearing cap bolts of the bearing being checked to the proper specifications.

(3) Remove the bearing cap and compare the width of the flattened Plastigage with the metric scale provided on the package. Locate the band closest to the same width. This band shows the amount of clearance in thousandths of a millimeter. Differences in readings between the ends indicate the amount of taper present. Record all readings taken. Compare clearance measurements to specs found in engine specifications (Refer to 9 - ENGINE - SPECIFICATIONS). **Plastigage generally is accompanied by two scales. One scale is in inches, the other is a metric scale.**

NOTE: Plastigage is available in a variety of clearance ranges. Use the most appropriate range for the specifications you are checking.

(4) Install the proper crankshaft bearings to achieve the specified bearing clearances.

ENGINE 2.4L DOHC (Continued)

STANDARD PROCEDURE - ENGINE CORE AND OIL GALLERY PLUGS

Using a blunt tool such as a drift and a hammer, strike the bottom edge of the cup plug. With the cup plug rotated, grasp firmly with pliers or other suitable tool and remove plug (Fig. 5).

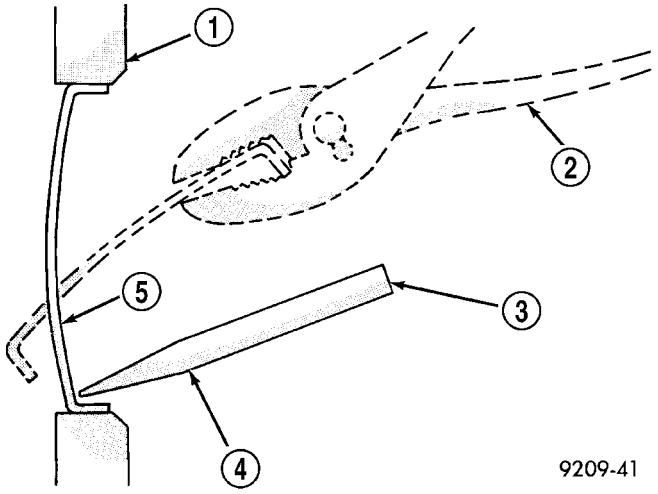

Fig. 5 Core Hole Plug Removal

1 - CYLINDER BLOCK
2 - REMOVE PLUG WITH PLIERS
3 - STRIKE HERE WITH HAMMER
4 - DRIFT PUNCH
5 - CUP PLUG

CAUTION: Do not drive cup plug into the casting as restricted cooling can result and cause serious engine problems.

Thoroughly clean inside of cup plug hole in cylinder block or head. Be sure to remove old sealer. Lightly coat inside of cup plug hole with Mopar® Stud and Bearing Mount. Make certain the new plug is cleaned of all oil or grease. Using proper drive plug, drive plug into hole so that the sharp edge of the plug is at least 0.5 mm (0.020 in.) inside the lead-in chamfer.

It is not necessary to wait for curing of the sealant. The cooling system can be refilled and the vehicle placed in service immediately.

REMOVAL - ENGINE ASSEMBLY

(1) Perform fuel pressure release procedure (Refer to 14 - FUEL SYSTEM/FUEL DELIVERY - STANDARD PROCEDURE).

(2) Disconnect negative battery cable.

(3) Drain cooling system (Refer to 7 - COOLING/ENGINE - STANDARD PROCEDURE).

(4) Discharge A/C system using a suitable refrigerant recovery machine.

(5) Remove throttle body air inlet hose and air cleaner housing assembly.

(6) Remove upper radiator crossmember.

(7) Disconnect upper and lower radiator hoses at radiator.

(8) Using a blade or suitable hose cutter, cut transaxle oil cooler lines off flush with fittings. Plug lines and fittings to prevent debris from entering transaxle or cooler circuit. A service splice kit will be installed upon reassembly.

(9) Disconnect A/C lines at condenser. Remove cooling module assembly (radiator, fan module, and condenser).

(10) Disconnect transmission electrical harness connectors (C104 & C105) (Refer to 8 - ELECTRICAL/CONNECTOR/GROUND LOCATIONS - DESCRIPTION).

(11) Disconnect transmission shift cable.

(12) Disconnect engine electrical harness from PCM and bulkhead connectors.

(13) Raise vehicle on hoist.

(14) Remove both front wheels.

(15) Remove left and right splash shields.

(16) Remove both axle shafts (Refer to 3 - DIFFERENTIAL & DRIVELINE/HALF SHAFT - REMOVAL).

(17) Drain engine oil.

(18) Remove accessory drive belts (Refer to 7 - COOLING/ACCESSORY DRIVE/DRIVE BELTS - REMOVAL).

(19) Remove power steering pump from bracket. **Do not** disconnect power steering lines from pump. Reposition pump and support with suitable retaining strap.

(20) Disconnect heater return hose from pipe connection at right front frame rail area.

(21) Disconnect A/C compressor electrical connectors.

(22) Disconnect exhaust pipe from manifold.

(23) Remove through bolts from front and rear engine mounts.

(24) Remove rear mount bracket from transmission.

(25) Remove structural collar and torque reaction bracket (Refer to 9 - ENGINE/ENGINE BLOCK/STRUCTURAL COVER - REMOVAL).

(26) Mark flex plate to torque converter position. Remove torque converter bolts.

(27) Lower vehicle.

(28) Disconnect positive cable from battery and PDC.

(29) Disconnect ground cable from left side transaxle mount bracket.

(30) Disconnect throttle and speed control cables.

(31) Disconnect coolant recovery container overflow hose.

(32) Disconnect heater hose at thermostat housing.

ENGINE 2.4L DOHC (Continued)

(33) Disconnect all ground straps attaching to engine.

(34) Disconnect brake booster and vapor purge vacuum hoses.

(35) Disconnect fuel line from fuel rail.

(36) Disconnect generator connectors.

(37) Remove intake manifold (Refer to 9 - ENGINE/MANIFOLDS/INTAKE MANIFOLD - REMOVAL).

(38) Remove generator.

(39) Remove A/C suction line at compressor. Cap suction port and line.

(40) Remove A/C compressor.

(41) Raise vehicle enough to allow engine dolly 6135 and cradle 6710 with posts 6848 to be installed under vehicle (Fig. 6).

(42) Loosen cradle engine mounts to allow movement for positioning onto engine locating holes on the engine bedplate, compressor and support bracket. Install adapters 6909 to the two post at rear of engine. Lower vehicle and position cradle mounts until the engine is resting on posts. Tighten post mounts to cradle frame. This will keep mounts from moving when removing or installing engine/transmission assembly. Secure engine/transmission to dolly/cradle with safety straps.

(43) Lower vehicle so weight of the engine and transmission ONLY is on the cradle.

(44) Remove right and left side vertical engine mount bolts.

(45) Slowly raise vehicle in short length spans. Inspect at each interval for potential engine or transaxle contact to vehicle components. Move the cradle/dolly fixture as necessary to allow for removal clearance.

INSTALLATION - ENGINE ASSEMBLY

(1) Position engine/transaxle assembly under vehicle and slowly lower vehicle in short length spans. Inspect at each interval for potential engine or transaxle contact to vehicle components. Move the cradle/dolly fixture as necessary to allow for installation clearance.

(2) Continue lowering vehicle until right side engine mount and left side transaxle mount align to their mounting locations. Install mounting bolts and torque to 61 N·m (45 ft. lbs.).

(3) Remove safety straps from engine/transaxle assembly. Slowly raise vehicle enough to remove the engine dolly and cradle.

(4) Install A/C compressor.

(5) Connect A/C suction line to compressor.

(6) Install generator.

(7) Install intake manifold. Torque fasteners to 12 N·m (105 in. lbs.) (Refer to 9 - ENGINE/MANIFOLDS/INTAKE MANIFOLD - INSTALLATION).

(8) Connect generator connectors.

(9) Connect fuel line to fuel rail.

(10) Connect brake booster and vapor purge hoses.

(11) Connect all ground straps to engine.

(12) Connect heater hose to thermostat housing.

(13) Connect coolant recovery container overflow hose.

(14) Connect throttle and speed control cables.

(15) Connect ground cable to left side transaxle mount bracket.

(16) Connect positive cable to battery and PDC.

(17) Raise vehicle on hoist.

(18) Install torque converter bolts.

(19) Install structural collar and torque reaction bracket (Refer to 9 - ENGINE/ENGINE BLOCK/STRUCTURAL COVER - INSTALLATION).

(20) Install rear mount bracket to transmission.

(21) Install front and rear engine mount through bolts. Torque fasteners to 61 N·m (45 ft. lbs.).

(22) Connect exhaust pipe to exhaust manifold. Torque fasteners to 28 N·m (250 in. lbs.).

(23) Connect A/C compressor electrical connectors.

(24) Connect heater return hose to pipe connection at right front frame rail area.

(25) Install power steering pump to bracket.

(26) Install accessory drive belts (Refer to 7 - COOLING/ACCESSORY DRIVE/DRIVE BELTS - INSTALLATION).

(27) Install both axle shafts (Refer to 3 - DIFFERENTIAL & DRIVELINE/HALF SHAFT - INSTALLATION).

(28) Install new oil filter.

(29) Install left and right splash shields.

(30) Install both front wheels.

(31) Lower vehicle.

(32) Connect engine electrical harness to PCM and bulkhead connectors.

(33) Connect transmission shift cable.

(34) Connect transmission electrical connectors (C104 & C105) (Refer to 8 - ELECTRICAL/CONNECTOR/GROUND LOCATIONS - DESCRIPTION).

(35) Install cooling module assembly (radiator, fan module, and condenser). Connect A/C lines to condenser.

(36) Connect transmission oil cooler lines using service splice kit. Refer to instructions provided with kit.

(37) Connect upper and lower radiator hoses.

(38) Install upper radiator crossmember.

(39) Install throttle body air inlet hose and air cleaner housing assembly.

(40) Fill engine crankcase with proper oil to correct level.

(41) Evacuate and recharge A/C system (Refer to 24 - HEATING & AIR CONDITIONING - STANDARD PROCEDURE).

(42) Fill cooling system (Refer to 7 - COOLING/ENGINE - STANDARD PROCEDURE).

(43) Connect negative battery cable.

(44) Start engine and run until normal operating temperature is reached.

ENGINE 2.4L DOHC (Continued)

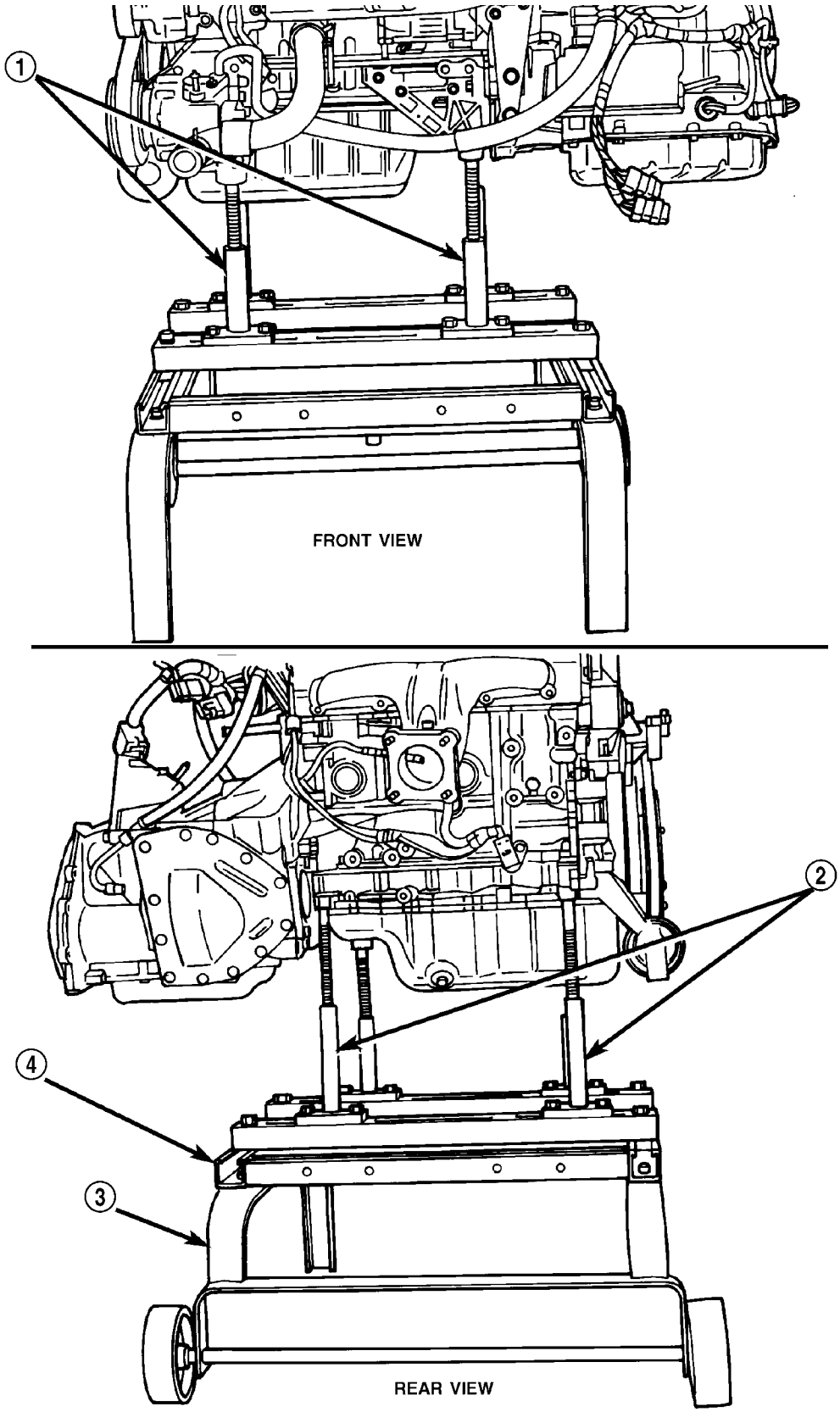

Fig. 6 Positioning Engine Cradle Support Post Mounts

1 - SPECIAL TOOLS POST 6848
2 - SPECIAL TOOLS POST 6848 WITH ADAPTERS 6909
3 - SPECIAL TOOL 6135 DOLLY
4 - SPECIAL TOOL 6710 CRADLE

ENGINE 2.4L DOHC (Continued)

SPECIFICATIONS

2.4L ENGINE

DESCRIPTION	SPECIFICATION
General Specification	
Type	In-Line OHV, DOHC
Number of Cylinders	4
Displacement	2.4 Liters (148 cu. in.)
Bore	87.5 mm (3.445 in.)
Stroke	101.0 mm (3.976 in.)
Compression Ratio	9.5:1
Firing Order	1-3-4-2
Compression Pressure	1172–1551 kPa (170–225 psi)
Max. Variation Between Cylinders	25%
Cylinder Block	
Cylinder Bore Diameter	87.4924–87.5076 mm (3.4446–3.4452 in.)
Out-of-Round (Max.)	0.051 mm (0.002 in.)
Taper (Max.)	0.051 mm (0.002 in.)
Pistons	
Piston Diameter	87.463–87.481 mm (3.4434–3.4441 in.)
Clearance @ 14 mm (9/16 in.) from bottom of skirt	0.024–0.057 mm (0.0009–0.0022 in.)
Weight	332–346 grams (11.85–12.20 oz.)
Land Clearance (Diametrical)	0.614–0.664 mm (0.024–0.026 in.)
Piston Length	60.3 mm (2.374 in.)
Piston Ring Groove Depth No. 1	4.640–4.784 mm (0.182–0.188 in.)
Piston Ring Groove Depth No. 2	4.575–4.719 mm (0.180–0.185 in.)
Piston Ring Groove Depth No. 3	4.097–4.236 mm (0.161–0.166 in.)
Piston Pins	
Clearance in Piston	0.005–0.018 mm (0.0002–0.0008 in.)
Clearance in Connecting Rod	Interference
Diameter	21.998–22.003 mm (0.8660–0.8662 in.)
End Play	None
Length	72.75–73.25 mm (2.864–2.883 in.)
Piston Rings	
Ring Gap—Top Compression Ring	0.25–0.51 mm (0.0098–0.020 in.)
Wear Limit	0.8 mm (0.031 in.)
Ring Gap—2nd Compression Ring	0.23–0.48 mm (0.009–0.018 in.)
Wear Limit	0.8 mm (0.031 in.)
Ring Gap—Oil Control Steel Rails	0.25–0.64 mm (0.0098–0.025 in.)
Wear Limit	1.0 mm (0.039 in.)
Ring Side Clearance—Compression Rings	0.030–0.080 mm (0.0011–0.0031 in.)
Wear Limit	0.10 mm (0.004 in.)
Ring Side Clearance—Oil Ring Pack	0.012–0.178 mm (0.0004–0.0070 in.)
Ring Width—Compression Rings	1.47–1.50 mm (0.057–0.059 in.)
Ring Width—Oil Ring Pack	2.72–2.88 mm (0.107–0.1133 in.)
Connecting Rod	
Bearing Clearance	0.025–0.071 mm (0.0009–0.0027 in.)
Wear Limit	0.075 mm (0.003 in.)
Bore Diameter—Piston Pin	20.96–20.98 mm (0.8252–0.8260 in.)

ENGINE 2.4L DOHC (Continued)

DESCRIPTION	SPECIFICATION
Bore Diameter—Crankshaft End	53.007–52.993 mm (2.0868–2.0863 in.)
Side Clearance	0.13–0.38 mm (0.005–0.015 in.)
Wear Limit	0.40 mm (0.016 in.)
Weight—Total (Less Bearing)	565.8 grams (19.96 oz.)
Crankshaft	
Connecting Rod Journal Diameter	49.984–50.000 mm (1.967–1.9685 in.)
Main Bearing Journal Diameter	59.992–60.008 mm (2.361–2.3625 in.)
Journal Out-of-Round (Max.)	0.0035 mm (0.0001 in.)
Journal Taper (Max.)	0.0038 mm (0.0001 in.)
End Play	0.09–0.24 mm (0.0035–0.0094 in.)
Wear Limit	0.37 mm (0.015 in.)
Main Bearing Diametrical Clearance	0.018–0.058 mm (0.0007–0.0023 in.)
Hydraulic Lash Adjuster	
Body Diameter	15.901–15.913 mm (0.626–0.6264 in.)
Plunger Travel Minimum (Dry)	3.0 mm (0.118 in.)
Cylinder Head Camshaft Bearing Bore Diameter	
Journals No.1–6	26.020–26.041 mm (1.024–1.025 in.)
Camshaft	
Journal Diameter No. 1–6	25.951–25.970 mm (1.021–1.022 in.)
Bearing Clearance—Diametrical	0.069–0.071 mm (0.0027–0.003 in.)
End Play	0.05–0.17 mm (0.0019–0.0066 in.)
Lift (Zero Lash)	
Intake	8.25 mm (0.324 in.)

DESCRIPTION	SPECIFICATION
Exhaust	6.52 mm (0.256 in.)
Intake Valve Timing*	
Closes (ABDC	51°
Opens (BTDC)	1°
Duration	232°
Exhaust Valve Timing*	
Closes (ATDC)	8°
Opens (BBDC)	52°
Duration	240°
Valve Overlap	9°
*All readings in crankshaft degrees, at 0.5 mm (0.019 in.) of valve lift.	
Cylinder Head	
Material	Cast Aluminum
Gasket Thickness (Compressed)	0.71 mm (0.028 in.)
Valve Seat	
Angle	45°
Seat Diameter—Intake	33 mm (1.299 in.)
Seat Diameter—Exhaust	28 mm (1.102 in.)
Runout (Max.)	0.05 mm (0.002 in.)
Valve Seat Width—Intake and Exhaust	0.9–1.3 mm (0.035–0.051 in.)
Service Limit—Intake	2.0 mm (0.079 in.)
Service Limit—Exhaust	2.5 mm (0.098 in.)
Valve Guide	
Diameter I.D.	5.975–6.000 mm (0.235–0.236 in.)
Guide Bore Diameter	11.0–11.02 mm (0.4330–0.4338 in.)
Guide Height (spring seat to guide tip)	13.25–13.75 mm (0.521–0.541 in.)

ENGINE 2.4L DOHC (Continued)

DESCRIPTION	SPECIFICATION
Valves	
Face Angle—Intake and Exhaust	44.5—45°
Head Diameter—Intake	34.67–34.93 mm 1.364–1.375 in.)
Head Diameter—Exhaust	30.37–30.63 mm (1.195–1.205 in.)
Valve Length (Overall) —Intake —Exhaust	 112.76–113.32 mm (4.439–4.461 in.) 109.59–110.09 mm (4.314–4.334 in.)
Valve Stem Diameter —Intake —Exhaust	 5.934–5.952 mm (0.2337–0.2344 in.) 5.906–5.924 mm (0.2326–0.2333 in.)
Valve Margin	
Intake	1.285–1.615 mm (0.050–0.063
Service Limit	0.95 mm (1/32 in.)
Exhaust	0.985–1.315 mm (0.038–0.051 in.)
Service Limit	1.05 mm (3/64 in.)
Valve Stem Tip Height	
Intake	48.04 mm (1.891 in.)
Exhaust	47.99 mm (1.889 in.)
Valve Stem to Guide Clearance	
Intake	0.048–0.066 mm (0.0018–0.0025 in.)
Max. Allowable	0.076 mm (0.003 in.)
Service Limit	0.25 mm (0.010 in.)
Exhaust	0.0736–0.094 mm (0.0029–0.0037 in.)
Max. Allowable	0.101 mm (0.004 in.)

DESCRIPTION	SPECIFICATION
Service Limit	0.25 mm (0.010 in.)
Valve Springs	
Free Length (Approx.)	48.4 mm (1.905 in.)
Nominal Force (Valve Closed)	338 N @ 38.0 mm (75.98 lbs. @ 1.496 in.)
Nominal Force (Valve Open)	607 N @ 29.75 mm (136 lbs. @ 1.172 in.)
Installed Height	38.00 mm (1.496 in.)
Number of Coils	7.82
Wire Diameter	3.86 mm (1.496 in.)
Oil Pump	
Clearance Over Rotors (Max.)	0.10 mm (0.004 in.)
Cover Out-of-Flat (Max.)	0.025 mm (0.001 in.)
Inner Rotor Thickness (Min.)	9.40 mm (0.370 in.)
Outer Rotor Thickness (Min.)	9.40 mm (0.370 in.)
Outer Rotor Clearance (Max.)	0.039 mm (0.015 in.)
Outer Rotor Diameter (Min.)	79.95 mm (3.148 in.)
Tip Clearance Between Rotors (Max.)	0.20 mm (0.008 in.)
Oil Pressure	
At Curb Idle Speed*	25 kPa (4 psi)
At 3000 rpm	170–550 kPa (25–80 psi)
CAUTION: *If pressure is ZERO at curb idle, DO NOT run engine at 3000 rpm.	

ENGINE 2.4L DOHC (Continued)

TORQUE

DESCRIPTION	N·m	Ft. Lbs.	In. Lbs.
Balance Shaft Carrier to Block—Bolts	54	40	—
Balance Shaft Gear Cover—Double Ended Fastener	12	—	105
Balance Shaft Sprocket—Bolt	28	—	250
Balance Shaft Chain Tensioner—Bolts	12	—	105
Balance Shaft Carrier Cover—Bolts	12	—	105
Camshaft Sprocket—Bolt	115	85	—
Connecting Rod Cap—Bolts	27 +¼ turn	20 +¼ turn	—
Crankshaft Main Bearing Cap/Bedplate			
—M8 Bolts	28		250
—M11 Bolts	75	55	—
Crankshaft Damper	136	100	—
Cylinder Head—Bolts	(Refer to 9 - ENGINE/ CYLINDER HEAD - INSTALLATION)		
Cylinder Head Cover—Bolts	12	—	105
Flex Plate to Crankshaft	95	70	—
Engine Mount Bracket Right—Bolts	61	45	—
Engine Mounting—Bolts	(Refer to 9 ENGINE/ ENGINE MOUNTING)		
Exhaust Manifold to Cylinder Head—Bolts	23	—	200
Exhaust Manifold Heat Shield—Bolts	12	—	105
Intake Manifold —Bolts	28	—	250
Oil Filter	11	8	—
Oil Pan—Bolts	12	—	105
Oil Pan Drain—Plug	28	20	—
Oil Pump to Block—Bolts	28	—	250
Oil Pump Cover Plate—Bolts	12	—	105
Oil Pump Pick-up Tube—Bolt	23	—	200

DESCRIPTION	N·m	Ft. Lbs.	In. Lbs.
Oil Pump Relief Valve—Cap	41	30	—
Spark Plugs	18	13	—
Structural Collar	(Refer to 9 - ENGINE/ ENGINE BLOCK/ STRUCTURAL COLLAR - INSTALLATION)		
Timing Belt Covers			
- Front Covers to Rear Cover—Screws	6	—	50
- Rear Cover—M6 Bolts	12	—	105
—M8 Bolts	28	—	250
Timing Belt Idler Pulley	61	45	—
Timing Belt Tensioner Lock Bolt	25	—	220
Timing Belt Tensioner Assembly—Bolts	61	45	—

ENGINE 2.4L DOHC (Continued)

SPECIAL TOOLS

2.4L ENGINE

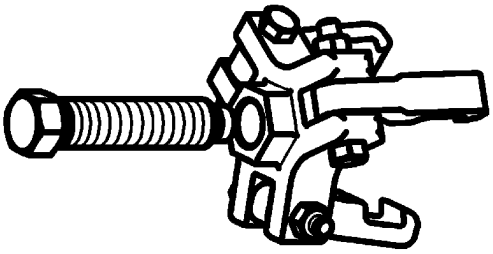

Puller 8454

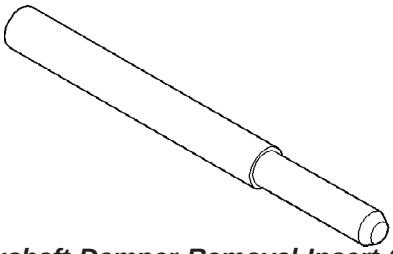

Crankshaft Damper Removal Insert 6827A

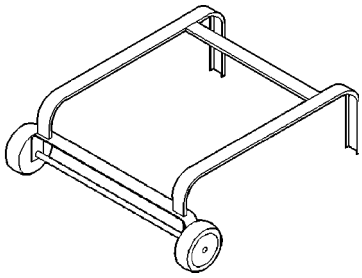

Dolly 6135

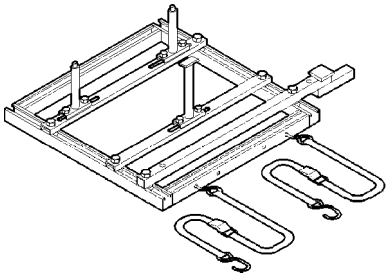

Cradle 6710A

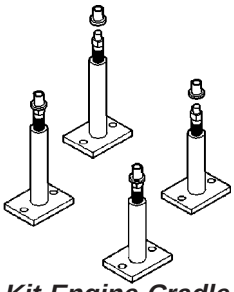

Post Kit Engine Cradle 6848

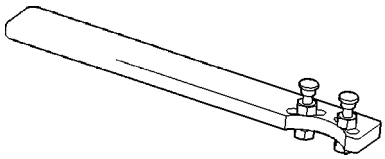

Camshaft Sprocket Holder 6847

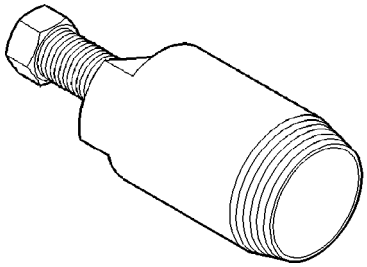

Camshaft Seal Remover C-4679A

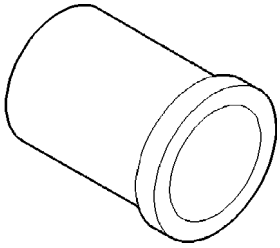

Camshaft Seal Installer MD-998306

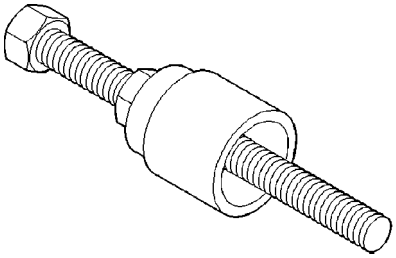

Crankshaft Damper/Sprocket Installer 6792

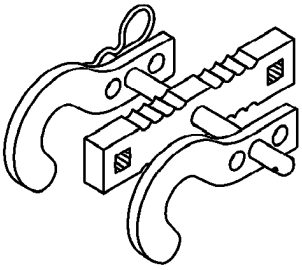

Valve Spring Compressor 8215-A

ENGINE 2.4L DOHC (Continued)

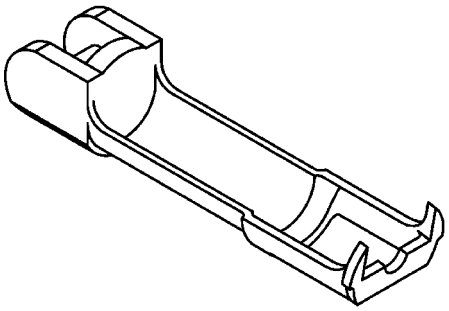

Adaptor 8436

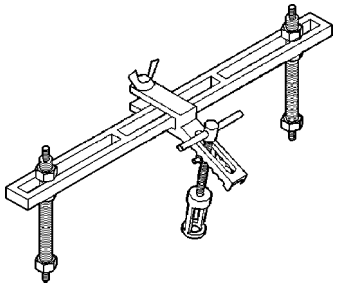

Valve Spring Compressor MD998772A

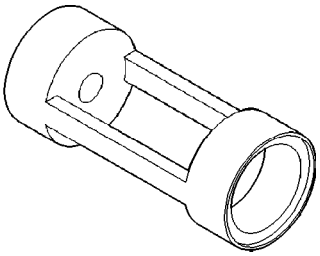

Valve Spring Compressor Adapter 6779

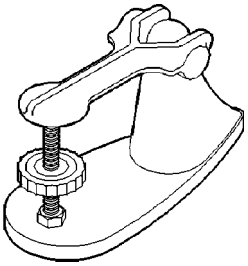

Valve Spring Tester C-647

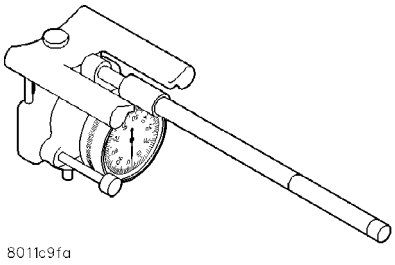

Indicator, Cylinder Bore C-119

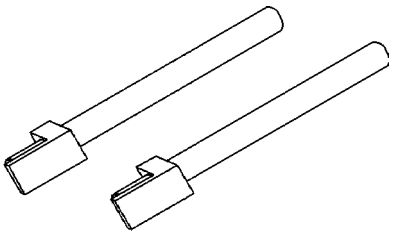

Connecting Rod Guides 8189

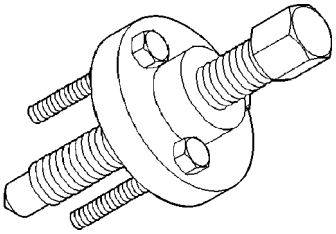

Crankshaft Sprocket Remover 6793

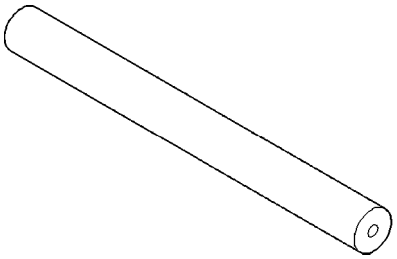

Crankshaft Sprocket Remover Insert C-4685-C2

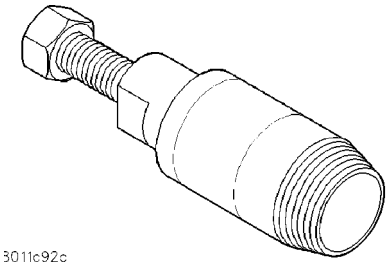

Front Crankshaft Oil Seal Remover 6771

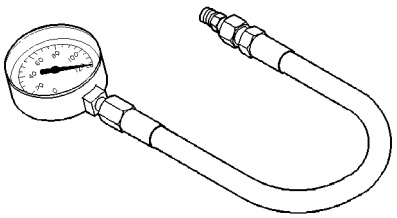

Oil Pressure Gauge C-3292

ENGINE 2.4L DOHC (Continued)

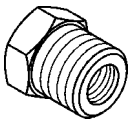

Adapter 8406

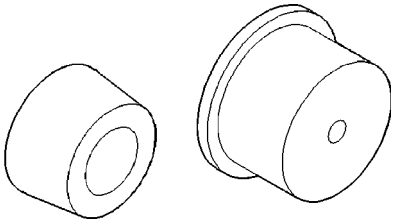

Rear Crankshaft Oil Seal Installer 6926

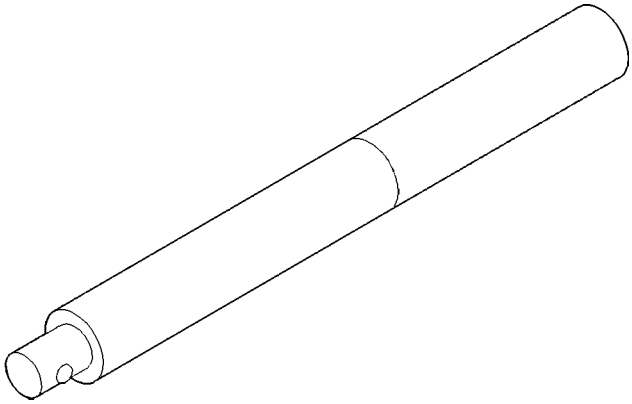

Driver Handle C-4171

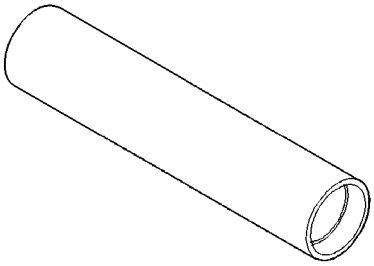

Balance Shaft Sprocket Installer 6052

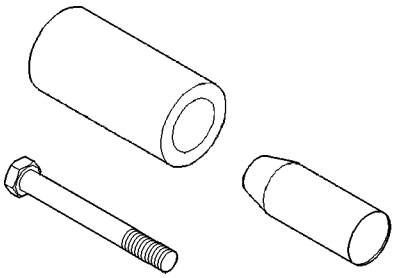

Front Crankshaft Oil Seal Installer 6780

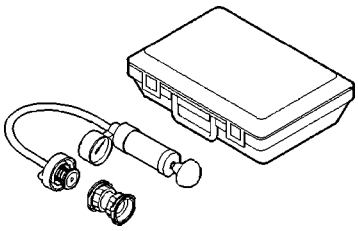

Cooling System Tester 7700

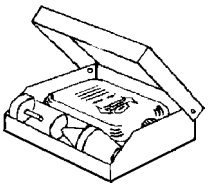

Combustion Leak Tester C-3685-A

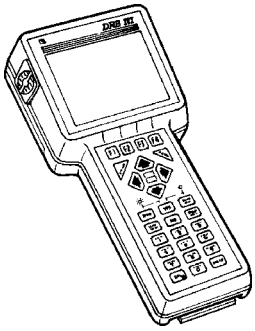

DRB III® with PEP Module OT-CH6010A

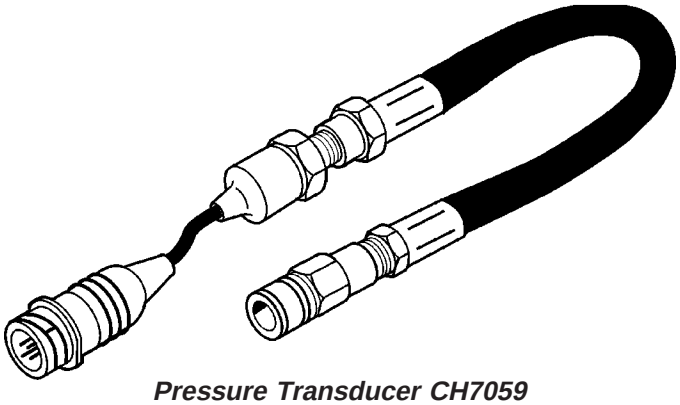

Pressure Transducer CH7059

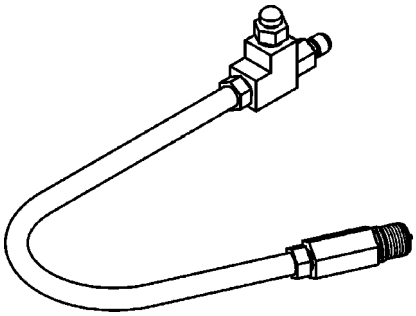

Cylinder Compression Pressure Adaptor 8116

AIR CLEANER ELEMENT

REMOVAL

(1) Disconnect negative battery cable.

(2) Disconnect inlet air temperature sensor electrical connector.

(3) Disconnect fresh air makeup hose from throttle body air inlet hose.

(4) Disconnect PCV hose from intake manifold.

(5) Loosen hose clamp at throttle body air inlet hose. Remove hose from throttle body.

(6) Push in on locking tabs to disengage air inlet hose from air cleaner housing. Remove throttle body air inlet hose and air cleaner element together.

(7) Separate air cleaner element from throttle body air inlet hose.

INSTALLATION

(1) Clean any debris from inside air cleaner housing.

(2) Install air cleaner element onto throttle body air inlet hose.

(3) Install throttle body air inlet hose into air cleaner housing. Push in on hose until an audible “click” is heard from locking tabs.

(4) Install hose on throttle body. Tighten hose clamp.

(5) Connect PCV hose to intake manifold.

(6) Connect fresh air makeup hose.

(7) Connect inlet air temperature sensor electrical connector.

(8) Connect negative battery cable.

AIR CLEANER HOUSING

REMOVAL

(1) Disconnect negative battery cable.

(2) Disconnect inlet air temperature sensor electrical connector.

(3) Disconnect fresh air makeup hose from throttle body air inlet hose.

(4) Loosen hose clamp at throttle body air inlet hose. Remove hose from throttle body (Fig. 7).

(5) Remove push pin securing air duct to upper radiator support.

(6) Remove nut on bracket that holds air cleaner housing.

(7) Pull air cleaner housing straight up off locating pins (Fig. 7).

INSTALLATION

(1) Install air cleaner housing straight down on locating pins (Fig. 7).

(2) Install nut on bracket that holds air cleaner housing and tighten.

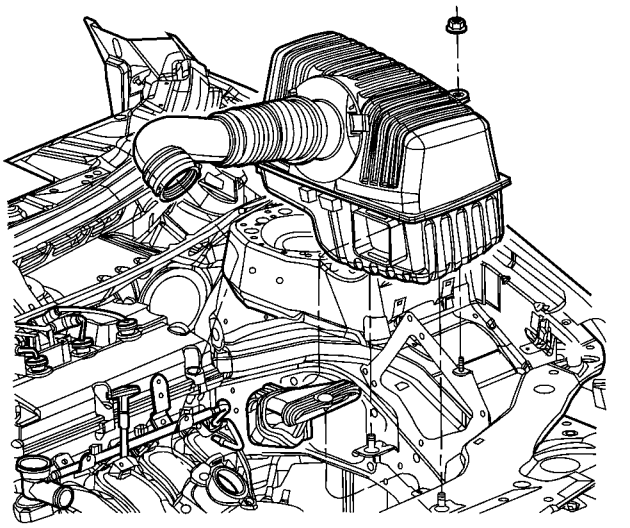

Fig. 7 Air Cleaner Housing

(3) Install push pin that secures air duct to upper radiator support.

(4) Install throttle body air inlet hose to throttle body. Tighten hose clamp.

(5) Connect fresh air makeup hose.

(6) Connect inlet air temperature sensor electrical connector.

(7) Connect negative battery cable.

CYLINDER HEAD

DESCRIPTION

The cross flow designed, aluminum cylinder head contains dual over-head camshafts with four valves per cylinder (Fig. 8). The valves are arranged in two in-line banks. The intake valves face toward the front of the vehicle. The exhaust valves face the dash panel. The cylinder head incorporates powdered metal valve guides and seats. The cylinder head is sealed to the block using a multi-layer steel head gasket and retaining bolts.

Integral oil galleries provide lubrication passages to the hydraulic lash adjusters, camshafts, and valve mechanisms.

DIAGNOSIS AND TESTING—CYLINDER HEAD GASKET

A cylinder head gasket leak can be located between adjacent cylinders or between a cylinder and the adjacent water jacket.

Possible indications of the cylinder head gasket leaking between adjacent cylinders are:

- Loss of engine power
- Engine misfiring
- Poor fuel economy

CYLINDER HEAD (Continued)

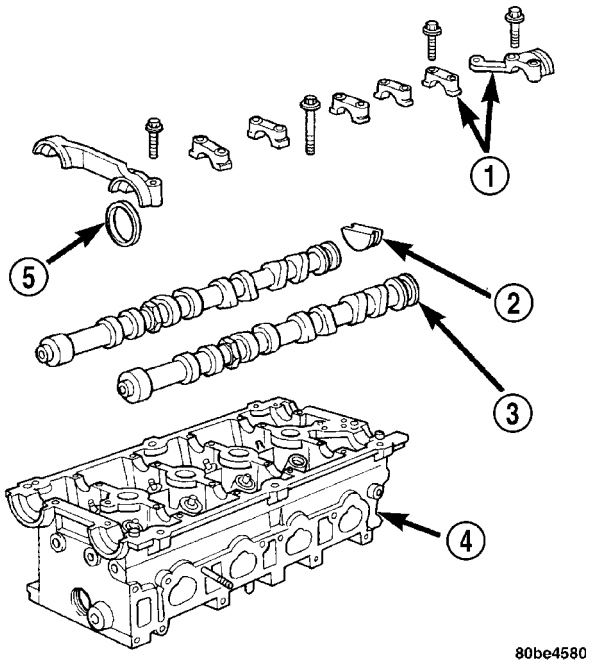

Fig. 8 Cylinder Head and Camshafts

1 - CAMSHAFT BEARING CAPS
2 - PLUG
3 - CAMSHAFT
4 - CYLINDER HEAD
5 - CAMSHAFT OIL SEAL

Possible indications of the cylinder head gasket leaking between a cylinder and an adjacent water jacket are:

- Engine overheating
- Loss of coolant
- Excessive steam (white smoke) emitting from exhaust
- Coolant foaming

CYLINDER-TO-CYLINDER LEAKAGE TEST

To determine if an engine cylinder head gasket is leaking between adjacent cylinders, follow the procedures in Cylinder Compression Pressure Test (Refer to 9 - ENGINE - DIAGNOSIS AND TESTING). An engine cylinder head gasket leaking between adjacent cylinders will result in approximately a 50–70% reduction in compression pressure.

CYLINDER-TO-WATER JACKET LEAKAGE TEST

WARNING: USE EXTREME CAUTION WHEN THE ENGINE IS OPERATING WITH COOLANT PRESSURE CAP REMOVED.

VISUAL TEST METHOD

With the engine cool, remove the coolant pressure cap. Start the engine and allow it to warm up until thermostat opens.

If a large combustion/compression pressure leak exists, bubbles will be visible in the coolant.

COOLING SYSTEM TESTER METHOD

WARNING: WITH COOLING SYSTEM TESTER IN PLACE, PRESSURE WILL BUILD UP FAST. EXCESSIVE PRESSURE BUILT UP, BY CONTINUOUS ENGINE OPERATION, MUST BE RELEASED TO A SAFE PRESSURE POINT. NEVER PERMIT PRESSURE TO EXCEED 138 kPa (20 psi).

Install Cooling System Tester 7700 or equivalent to pressure cap neck. Start the engine and observe the tester's pressure gauge. If gauge pulsates with every power stroke of a cylinder a combustion pressure leak is evident.

CHEMICAL TEST METHOD

Combustion leaks into the cooling system can also be checked by using Bloc-Chek Kit C-3685-A or equivalent. Perform test following the procedures supplied with the tool kit.

REMOVAL - CYLINDER HEAD

(1) Perform fuel system pressure release procedure **before attempting any repairs.** (Refer to 14 - FUEL SYSTEM/FUEL DELIVERY - STANDARD PROCEDURE)

(2) Disconnect negative battery cable.

(3) Drain cooling system (Refer to 7 - COOLING/ENGINE - STANDARD PROCEDURE).

(4) Remove throttle body air inlet hose and air cleaner housing assembly.

(5) Remove intake manifold (Refer to 9 - ENGINE/MANIFOLDS/INTAKE MANIFOLD - REMOVAL).

(6) Disconnect heater hose from thermostat housing.

(7) Remove heater tube support bracket from cylinder head.

(8) Disconnect camshaft position sensor electrical connector.

(9) Disconnect EGR solenoid electrical connector.

(10) Raise vehicle on hoist.

(11) Disconnect exhaust pipe from exhaust manifold.

(12) Remove accessory drive belts (Refer to 7 - COOLING/ACCESSORY DRIVE/DRIVE BELTS - REMOVAL).

(13) Remove crankshaft damper (Refer to 9 - ENGINE/ENGINE BLOCK/VIBRATION DAMPER - REMOVAL).

(14) Remove upper and lower timing belt covers (Refer to 9 - ENGINE/VALVE TIMING/TIMING BELT / CHAIN COVER(S) - REMOVAL).

CYLINDER HEAD (Continued)

(15) Remove timing belt (Refer to 9 - ENGINE/VALVE TIMING/TIMING BELT/CHAIN AND SPROCKETS - REMOVAL).

(16) Remove camshaft sprockets (Refer to 9 - ENGINE/VALVE TIMING/TIMING BELT/CHAIN AND SPROCKETS - REMOVAL).

(17) Remove timing belt idler pulley and rear timing belt cover.

(18) Remove cylinder head cover (Refer to 9 - ENGINE/CYLINDER HEAD/CYLINDER HEAD COVER(S) - REMOVAL).

(19) Remove camshafts and rocker arms (Refer to 9 - ENGINE/CYLINDER HEAD/CAMSHAFT(S) - REMOVAL).

(20) Remove cylinder head bolts and remove cylinder head from engine block.

(21) Inspect and clean cylinder head (Refer to 9 - ENGINE - STANDARD PROCEDURE).

CLEANING

To ensure engine gasket sealing, proper surface preparation must be performed, especially with the use of aluminum engine components and multi-layer steel cylinder head gaskets.

NOTE: Multi-Layer Steel (MLS) head gaskets require a scratch free sealing surface.

Remove all gasket material from cylinder head and block (Refer to 9 - ENGINE - STANDARD PROCEDURE). Be careful not to gouge or scratch the aluminum head sealing surface.

Clean all engine oil passages.

INSPECTION

(1) Cylinder head must be flat within 0.1 mm (0.004 in.) (Fig. 9).

(2) Inspect camshaft bearing journals for scoring.

(3) Remove carbon and varnish deposits from inside of valve guides with a reliable guide cleaner.

(4) Using a small hole gauge and a micrometer, measure valve guides in 3 places top, middle and bottom (Fig. 10). (Refer to 9 - ENGINE - SPECIFICATIONS) Replace guides if they are not within specification.

(5) Check valve guide height (Fig. 11).

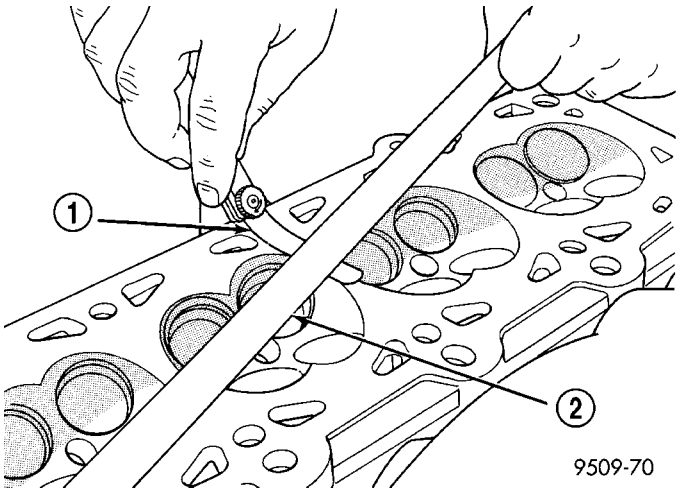

Fig. 9 Checking Cylinder Head Flatness

1 - FEELER GAUGE
2 - STRAIGHT EDGE

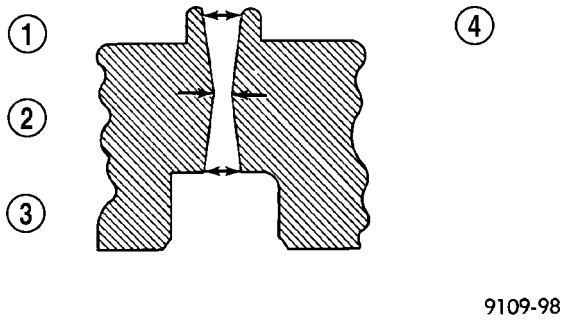

Fig. 10 Checking Wear on Valve Guide—Typical

1 - TOP
2 - MIDDLE
3 - BOTTOM
4 - CUT AWAY VIEW OF VALVE GUIDE MEASUREMENT LOCATIONS

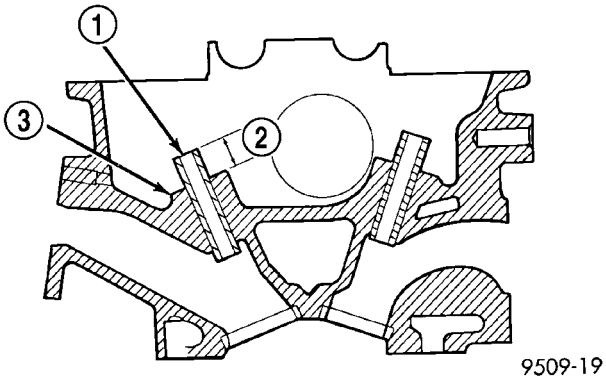

Fig. 11 Valve Guide Height

1 - VALVE GUIDE
2 - 13.25 - 13.75 MM (0.521 - 0.541 IN.)
3 - SPRING SEAT

CYLINDER HEAD (Continued)

INSTALLATION - CYLINDER HEAD

NOTE: The Cylinder head bolts should be examined BEFORE reuse. If the threads are necked down, the bolts must be replaced (Fig. 12).

Necking can be checked by holding a scale or straight edge against the threads. If all the threads do not contact the scale, the bolt should be replaced.

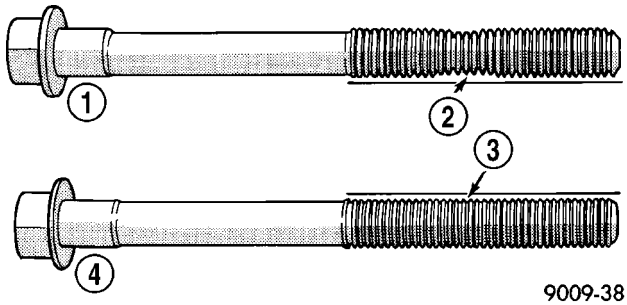

Fig. 12 Checking Bolts for Stretching (Necking)

1 - STRETCHED BOLT
2 - THREADS ARE NOT STRAIGHT ON LINE
3 - THREADS ARE STRAIGHT ON LINE
4 - UNSTRETCHED BOLT

(1) Before installing the bolts, the threads should be coated with engine oil.

(2) Position cylinder head gasket on block.

(3) Install cyllinder head on block.

(4) Tighten the cylinder head bolts in the sequence shown in (Fig. 13). Using the 4 step torque turn method, tighten according to the following values:

- First: All to 34 N·m (25 ft. lbs.)
- Second: All to 68 N·m (50 ft. lbs.)
- Third: All to 68 N·m (50 ft. lbs.)

CAUTION: Do not use a torque wrench for the Fourth step.

- **Fourth: Turn all bolts an additional 1/4 Turn**

(5) Install rocker arms and camshafts (Refer to 9 - ENGINE/CYLINDER HEAD/CAMSHAFT(S) - INSTALLATION).

(6) Install cylinder head cover (Refer to 9 - ENGINE/CYLINDER HEAD/CYLINDER HEAD COVER(S) - INSTALLATION).

(7) Install rear timing belt cover and timing belt idler pulley (Refer to 9 - ENGINE/VALVE TIMING/TIMING BELT / CHAIN COVER(S) - INSTALLATION).

(8) Install camshaft sprockets (Refer to 9 - ENGINE/VALVE TIMING/TIMING BELT/CHAIN AND SPROCKETS - INSTALLATION).

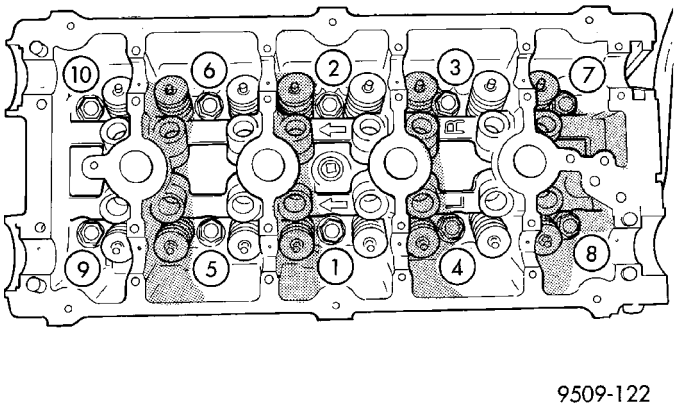

Fig. 13 Cylinder Head Tightening Sequence

(9) Install timing belt (Refer to 9 - ENGINE/VALVE TIMING/TIMING BELT/CHAIN AND SPROCKETS - INSTALLATION).

(10) Install upper and lower timing belt covers (Refer to 9 - ENGINE/VALVE TIMING/TIMING BELT / CHAIN COVER(S) - INSTALLATION).

(11) Install crankshaft damper (Refer to 9 - ENGINE/ENGINE BLOCK/VIBRATION DAMPER - INSTALLATION).

(12) Install accessory drive belts (Refer to 7 - COOLING/ACCESSORY DRIVE/DRIVE BELTS - INSTALLATION).

(13) Connect exhaust pipe to exhaust manifold. Torque fasteners to 28 N·m (250 in. lbs.).

(14) Connect camshaft position sensor electrical connector.

(15) Connect EGR solenoid electrical connector.

(16) Install heater tube support bracket to cylinder head.

(17) Connect heater hose to thermostat housing.

(18) Install intake manifold (Refer to 9 - ENGINE/MANIFOLDS/INTAKE MANIFOLD - INSTALLATION).

(19) Install throttle body air inlet hose and air cleaner housing assembly.

(20) Fill cooling system (Refer to 7 - COOLING/ENGINE - STANDARD PROCEDURE).

(21) Connect negative battery cable.

CAMSHAFT OIL SEAL(S)

REMOVAL

(1) Remove timing belt (Refer to 9 - ENGINE/VALVE TIMING/TIMING BELT AND SPROCKETS - REMOVAL).

(2) Hold each camshaft sprocket with Special Tool 6847 while removing center bolt (Fig. 14).

(3) Remove camshaft sprockets.

CAMSHAFT OIL SEAL(S) (Continued)

(4) Remove rear timing belt cover (Refer to 9 - ENGINE/VALVE TIMING/TIMING BELT COVER(S) - REMOVAL).

(5) Remove camshaft seal using Special Tool C-4679A (Fig. 15).

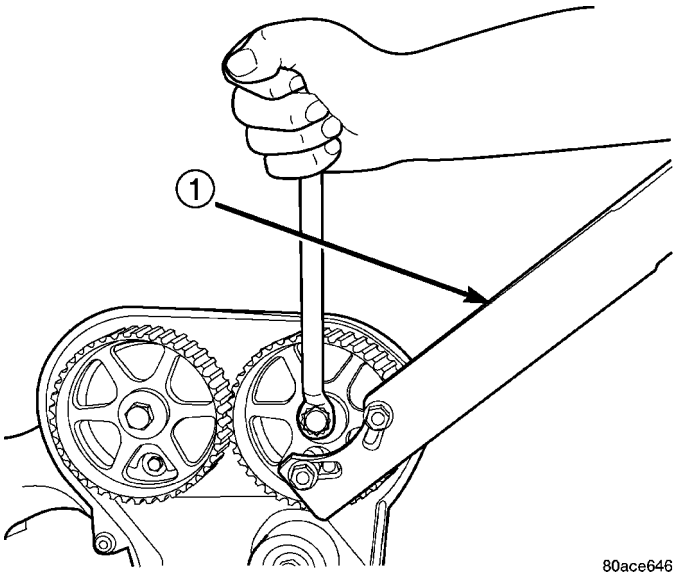

Fig. 14 Camshaft Sprocket - Removal/Installation

1 - SPECIAL TOOL 6847

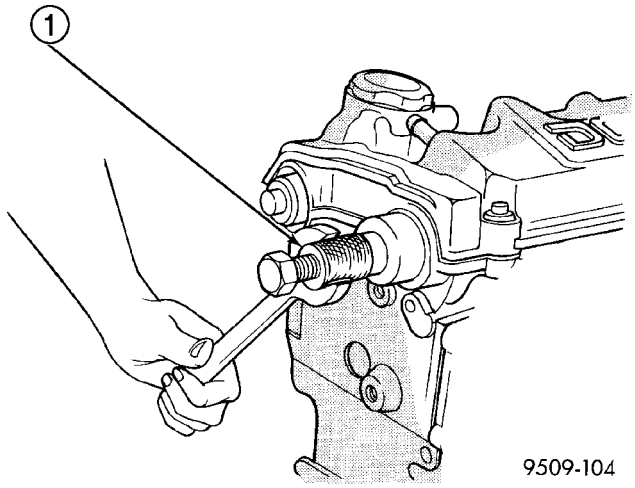

Fig. 15 Camshaft Oil Seal - Removal With C-4679A

1 - SPECIAL TOOL C-4679

CAUTION: Do not nick shaft seal surface or seal bore.

INSTALLATION

(1) Shaft seal surface must be free of varnish, dirt or nicks. Polish with 400 grit paper if necessary.

(2) Install camshaft seals into cylinder head using Special Tool MD-998306 until flush with head (Fig. 16).

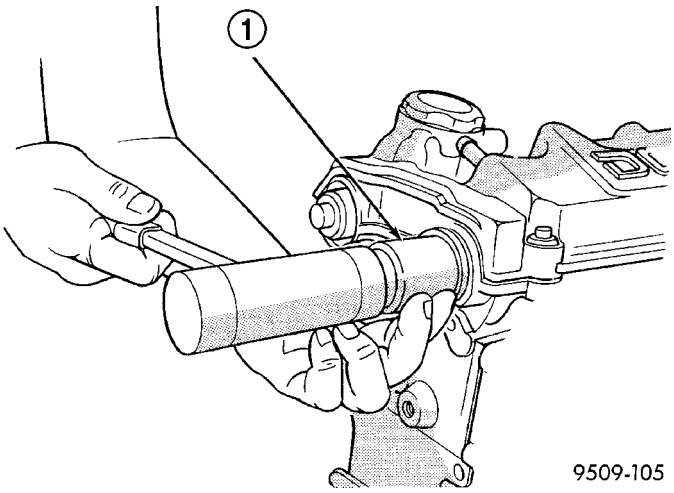

Fig. 16 Camshaft Seal - Installation

1 - SPECIAL TOOL MD-998306

(3) Install timing belt rear cover (Refer to 9 - ENGINE/VALVE TIMING/TIMING BELT COVER(S) - INSTALLATION).

(4) Install camshaft sprockets. Hold each sprocket with Special Tool 6847 and tighten center bolt to 115 N·m (85 ft. lbs.) (Fig. 14).

(5) Install timing belt and front covers (Refer to 9 - ENGINE/VALVE TIMING/TIMING BELT AND SPROCKETS - INSTALLATION) (Refer to 9 - ENGINE/VALVE TIMING/TIMING BELT COVER(S) - INSTALLATION).

CAMSHAFT(S)

DESCRIPTION

Both camshafts have six bearing journal surfaces and two cam lobes per cylinder (Fig. 17). Flanges at the rear journals control camshaft end play. Provision for a cam position sensor is located on the intake camshaft on the rear of the cylinder head. A hydrodynamic oil seal is used for oil control at the front of the camshaft.

OPERATION

The camshaft is driven by the crankshaft via drive sprockets and belt. The camshaft has precisely machined lobes to provide accurate valve timing and duration.

STANDARD PROCEDURE - MEASURING CAMSHAFT END PLAY

(1) Oil camshaft journals and install camshaft **WITHOUT** rocker arms. Install rear cam caps and tighten screws to specified torque.

(2) Using a suitable tool, move camshaft as far rearward as it will go.

CAMSHAFT(S) (Continued)

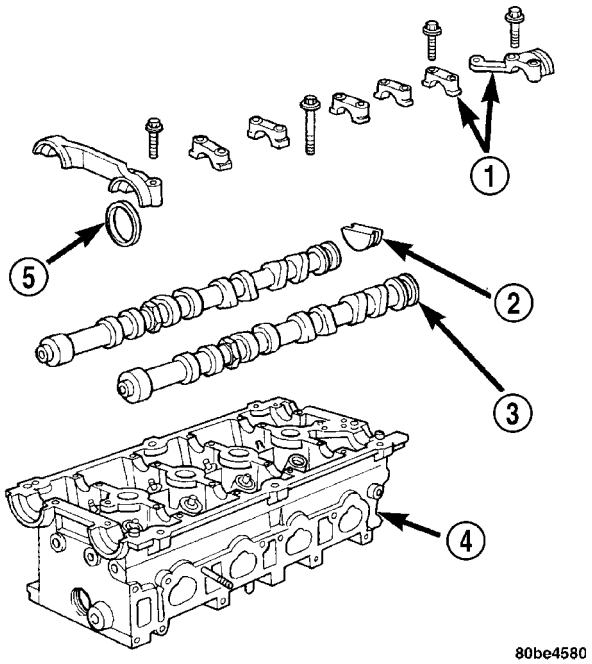

Fig. 17 Camshafts

1 - CAMSHAFT BEARING CAPS
2 - PLUG
3 - CAMSHAFT
4 - CYLINDER HEAD
5 - CAMSHAFT OIL SEAL

(3) Zero dial indicator (Fig. 18).

(4) Move camshaft as far forward as it will go.

(5) Record reading on dial indicator. For end play specification, (Refer to 9 - ENGINE - SPECIFICATIONS).

(6) If end play is excessive, check cylinder head and camshaft for wear; replace as necessary.

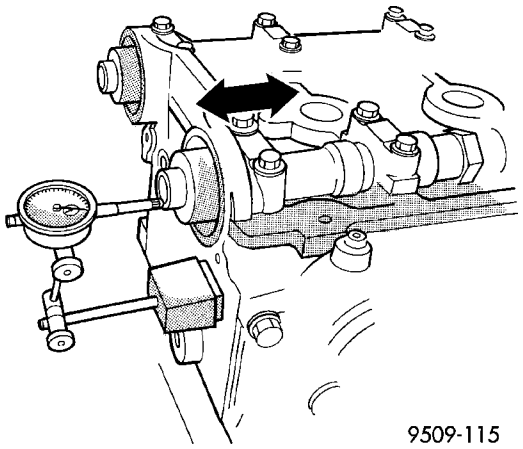

Fig. 18 Camshaft End Play - Typical

REMOVAL

(1) Remove cylinder head cover (Refer to 9 - ENGINE/CYLINDER HEAD/CYLINDER HEAD COVER - REMOVAL).

(2) Remove camshaft position sensor and camshaft target magnet (Refer to 8 - ELECTRICAL/IGNITION CONTROL/CAMSHAFT POSITION SENSOR - REMOVAL).

(3) Remove timing belt (Refer to 9 - ENGINE/VALVE TIMING/TIMING BELT AND SPROCKETS - REMOVAL).

(4) Remove camshaft sprockets and timing belt rear cover (Refer to 9 - ENGINE/VALVE TIMING/TIMING BELT COVER(S) - REMOVAL).

(5) Bearing caps are identified for location. Remove the outside bearing caps first (Fig. 19).

(6) Loosen the camshaft bearing cap attaching fasteners in sequence shown (Fig. 20) one camshaft at a time.

CAUTION: Camshafts are not interchangeable. The intake cam number 6 thrust bearing face spacing is wider.

(7) Identify the camshafts before removing from the head. The camshafts are not interchangeable.

(8) Remove camshafts from cylinder head.

NOTE: If removing rocker arms, identify for reinstallation in the original position.

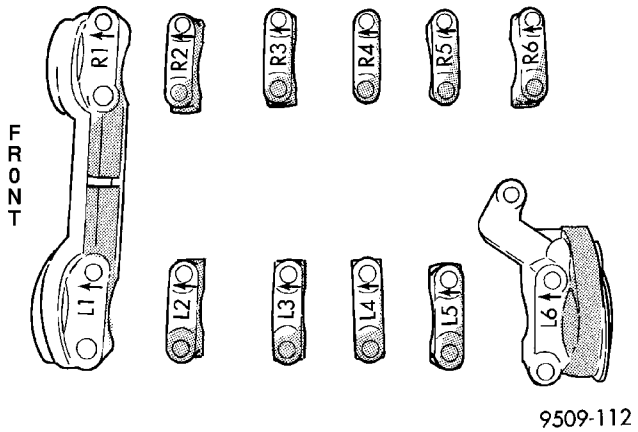

Fig. 19 Camshaft Bearing Cap Identification

CLEANING

Clean camshaft with a suitable solvent.

INSPECTION

(1) Inspect camshaft bearing journals for damage and binding (Fig. 21). If journals are binding, check the cylinder head for damage. Also check cylinder head oil holes for clogging.

(2) Check the cam lobe and bearing surfaces for abnormal wear and damage. Replace camshaft if defective.

NOTE: If camshaft is replaced due to lobe wear or damage, always replace the rocker arms.

CAMSHAFT(S) (Continued)

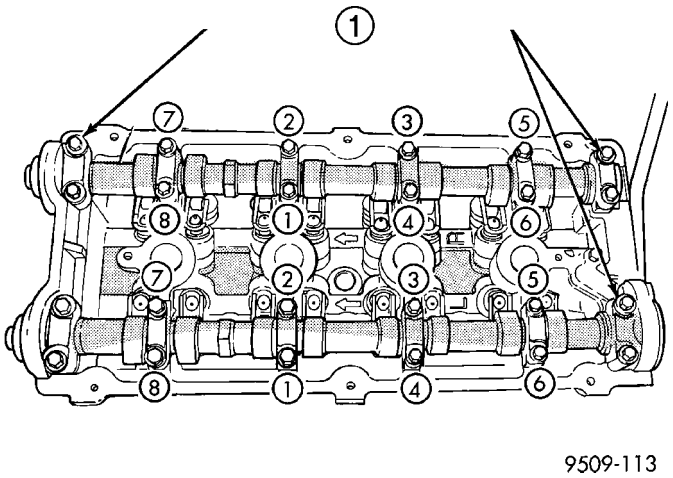

Fig. 20 Camshaft Bearing Cap - Removal

1 - REMOVE OUTSIDE BEARING CAPS FIRST

(3) Measure the lobe actual wear (unworn area - wear zone = actual wear) (Fig. 21) and replace camshaft if out of limit. Standard value is 0.0254 mm (0.001 in.), wear **limit** is 0.254 mm (0.010 in.).

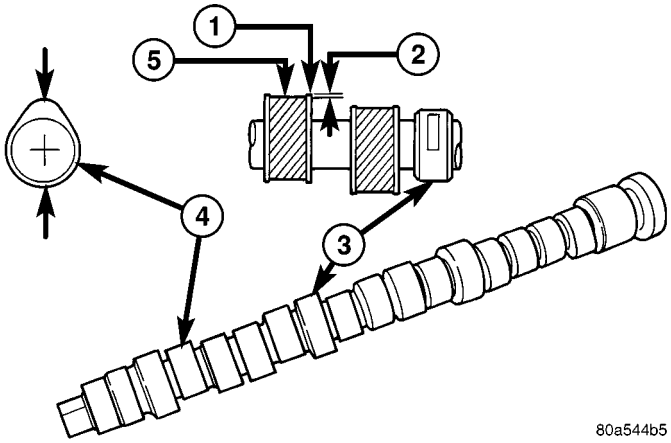

Fig. 21 Checking Camshaft(s) for Wear

1 - UNWORN AREA
2 - ACTUAL WEAR
3 - BEARING JOURNAL
4 - LOBE
5 - WEAR ZONE

INSTALLATION

CAUTION: Ensure that NONE of the pistons are at top dead center when installing the camshafts.

(1) Lubricate all camshaft bearing journals, rocker arms and camshaft lobes.

(2) Install all rocker arms in original positions, if reused.

(3) Position camshafts on cylinder head bearing journals. Install right and left camshaft bearing caps No. 2 – 5 and right No. 6. Tighten M6 fasteners to 12 N·m (105 in. lbs.) in sequence shown in (Fig. 22).

(4) Apply Mopar® Gasket Maker to No. 1 and No. 6 bearing caps (Fig. 23). Install bearing caps and tighten M8 fasteners to 28 N·m (250 in. lbs.).

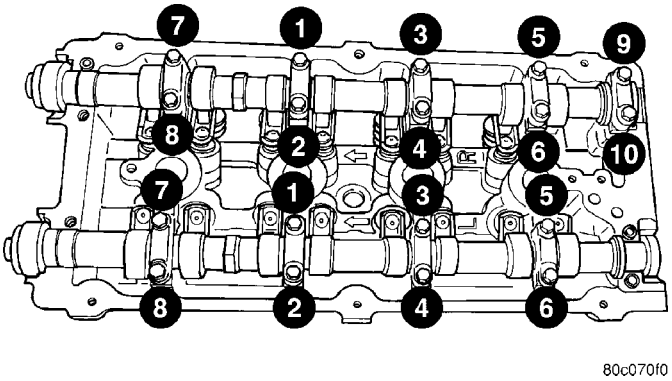

Fig. 22 Camshaft Bearing Cap Tightening Sequence

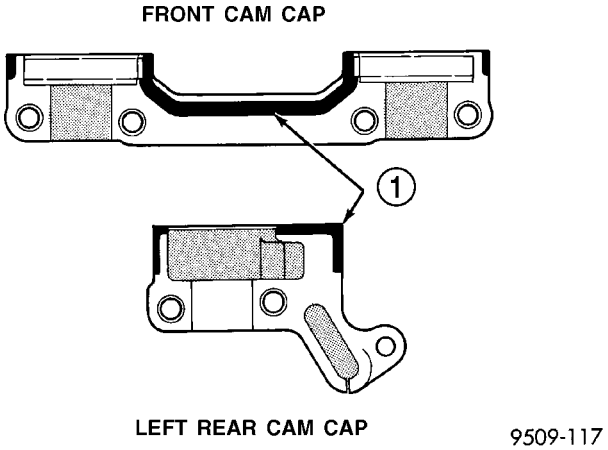

Fig. 23 Camshaft Bearing Cap Sealing

1 - 1.5 mm (.060 in.) DIAMETER BEAD OF MOPAR GASKET MAKER

NOTE: Bearing end caps must be installed before seals can be installed.

(5) Install camshaft oil seals (Refer to 9 - ENGINE/CYLINDER HEAD/CAMSHAFT OIL SEAL(S) - INSTALLATION).

(6) Install camshaft target magnet and camshaft position sensor.

(7) Install cylinder head cover (Refer to 9 - ENGINE/CYLINDER HEAD/CYLINDER HEAD COVER - INSTALLATION).

(8) Install timing belt rear cover and camshaft sprockets (Refer to 9 - ENGINE/VALVE TIMING/TIMING BELT COVER(S) - INSTALLATION).

(9) Install timing belt (Refer to 9 - ENGINE/VALVE TIMING/TIMING BELT AND SPROCKETS - INSTALLATION).

CYLINDER HEAD COVER

REMOVAL

(1) Remove ignition coil and plug wires (Fig. 24). Remove ground strap.

(2) Remove the cylinder head cover fasteners.

(3) Remove cylinder head cover from cylinder head.

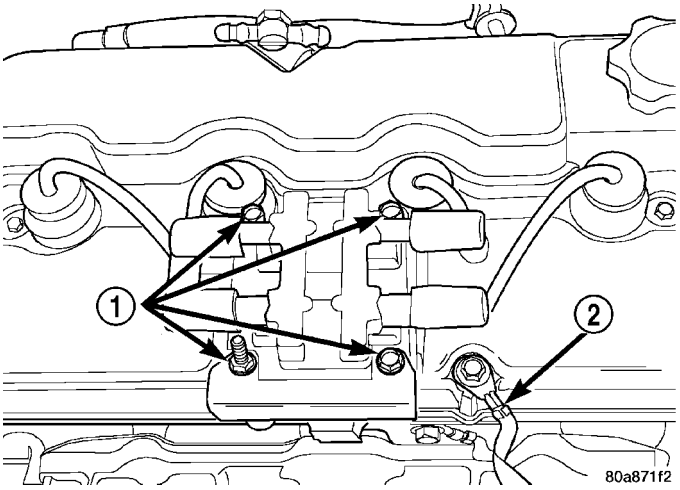

Fig. 24 Ignition Coil and Ground Strap

1 - IGNITION COIL FASTENERS
2 - GROUND STRAP

CLEANING

Clean cylinder head and cover mating surfaces using a suitable solvent.

INSPECTION

Inspect cover rails for flatness.

INSTALLATION

NOTE: Replace spark plug well seals when installing a new cylinder head cover gasket.

(1) Install new cylinder head cover gaskets and spark plug seals (Fig. 25).

CAUTION: Do not allow oil or solvents to contact the timing belt as they can deteriorate the rubber and cause tooth skipping.

(2) Apply Mopar® Engine RTV GEN II at the camshaft cap corners and at the top edge of the 1/2 round seal.

(3) Install cylinder head cover assembly to head and tighten fasteners in sequence shown in (Fig. 26). Using the 3 step torque method:

(a) Tighten all fasteners to 4.5 N·m (40 in. lbs.)
(b) Tighten all fasteners to 9.0 N·m (80 in. lbs.)
(c) Tighten all fasteners to 12 N·m (105 in. lbs.)

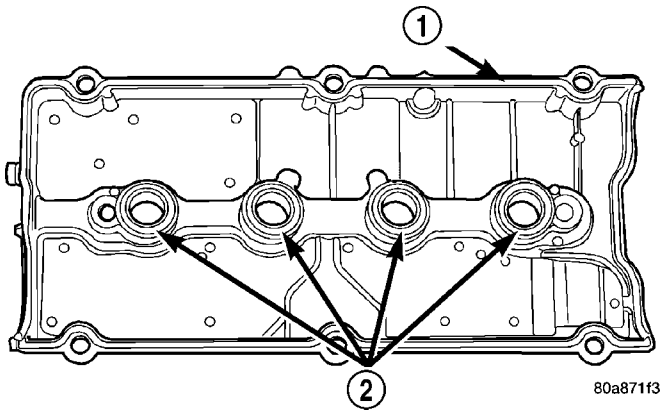

Fig. 25 Cylinder Head Cover Gasket and Spark Plug Seals

1 - ONE PIECE RUBBER GASKET
2 - SPARK PLUG WELL SEALS

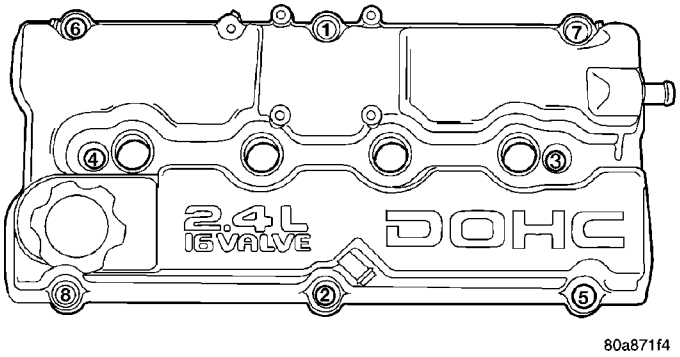

Fig. 26 Cylinder Head Cover Tightening Sequence

(4) Install ignition coil and plug wires. Tighten fasteners to 12 N·m (105 in. lbs.).

(5) Install ground strap.

HYDRAULIC LASH ADJUSTERS

DIAGNOSIS AND TESTING

HYDRAULIC LASH ADJUSTER NOISE DIAGNOSIS

A tappet-like noise may be produced from several items. Check the following items.

(1) Engine oil level too high or too low. This may cause aerated oil to enter the adjusters and cause them to be spongy.

(2) Insufficient running time after rebuilding cylinder head. Low speed running up to 1 hour may be required.

(3) During this time, turn engine off and let set for a few minutes before restarting. Repeat this several

HYDRAULIC LASH ADJUSTERS (Continued)

times after engine has reached normal operating temperature.

(4) Low oil pressure.

(5) The oil restrictor (integral to the cylinder head gasket) in the vertical oil passage to the cylinder head is plugged with debris.

(6) Air ingested into oil due to broken or cracked oil pump pick up.

(7) Worn valve guides.

(8) Rocker arm ears contacting valve spring retainer.

(9) Rocker arm loose, adjuster stuck or at maximum extension and still leaves lash in the system.

(10) Faulty lash adjuster.

- Check lash adjusters for sponginess while installed in cylinder head. Depress part of rocker arm over adjuster. Normal adjusters should feel very firm. Spongy adjusters can be bottomed out easily.
- Remove suspected lash adjusters, and replace as necessary.

REMOVAL

NOTE: This procedure is for in-vehicle service with camshafts installed.

(1) Remove cylinder head cover. (Refer to 9 - ENGINE/CYLINDER HEAD/CYLINDER HEAD COVER(S) - REMOVAL)

(2) Remove rocker arm. (Refer to 9 - ENGINE/CYLINDER HEAD/ROCKER ARMS - REMOVAL)

(3) Remove hydraulic lash adjuster (Fig. 27).

(4) Repeat removal procedure for each hydraulic lash adjuster.

(5) If reusing, mark each hydraulic lash adjuster for reassembly in original position. Lash adjusters are serviced as an assembly.

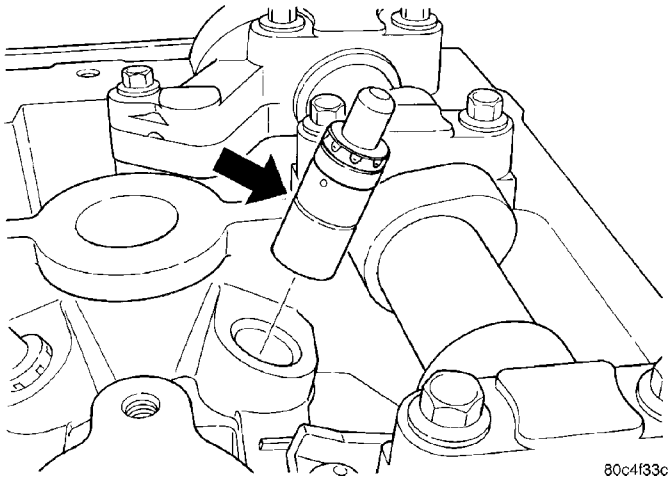

Fig. 27 Hydraulic Lash Adjuster

INSTALLATION

(1) Install hydraulic lash adjuster (Fig. 27). Ensure the lash adjusters are at least partially full of engine oil. This is indicated by little or no plunger travel when the lifter is depressed.

(2) Install rocker arm. (Refer to 9 - ENGINE/CYLINDER HEAD/ROCKER ARMS - INSTALLATION)

(3) Repeat installation procedure for each hydraulic lash adjuster.

(4) Install cylinder head cover. (Refer to 9 - ENGINE/CYLINDER HEAD/CYLINDER HEAD COVER(S) - INSTALLATION)

INTAKE/EXHAUST VALVES & SEATS

DESCRIPTION

The valves are made of heat resistant steel. They have chrome plated stems to prevent scuffing. Viton rubber valve stem seals are integral with the spring seats. The valves have three-bead lock keepers to retain springs and to promote valve rotation.

OPERATION

The four valves per cylinder (two intake and two exhaust) are opened by using roller rocker arms which pivot on hydraulic lash adjusters.

CLEANING

(1) Clean all valves thoroughly and discard burned, warped and cracked valves.

ROCKER ARMS

REMOVAL

NOTE: This procedure is for in-vehicle service with camshafts installed.

(1) Disconnect negative battery cable.

(2) Remove cylinder head cover. (Refer to 9 - ENGINE/CYLINDER HEAD/CYLINDER HEAD COVER(S) - REMOVAL)

(3) Remove spark plugs.

(4) Rotate engine until the camshaft lobe, on the follower being removed, is positioned on its base circle (heel). Also, the piston should be a minimum of 6.3 mm (0.25 in) below TDC position.

CAUTION: If cam follower assemblies are to be reused, always mark position for reassembly in their original positions.

ROCKER ARMS (Continued)

(5) Using Special Tools 8215-A and 8436 slowly depress valve assembly until rocker arm can be removed (Fig. 28).

(6) Repeat removal procedure for each rocker arm.

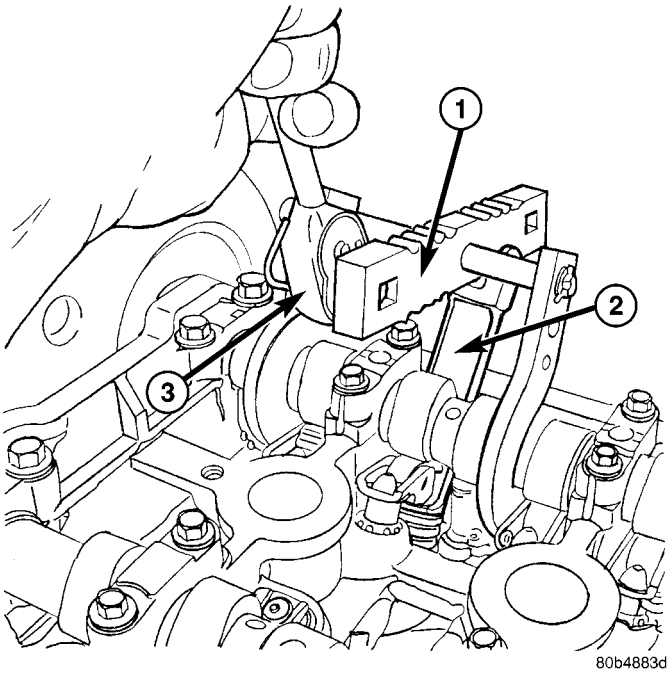

Fig. 28 Rocker Arm - Removal/Installation

1 - SPECIAL TOOL 8215-A
2 - SPECIAL TOOL 8436
3 - 3/8″ DRIVE RACHET

INSPECTION

Inspect the rocker arm for wear or damage (Fig. 29). Replace as necessary.

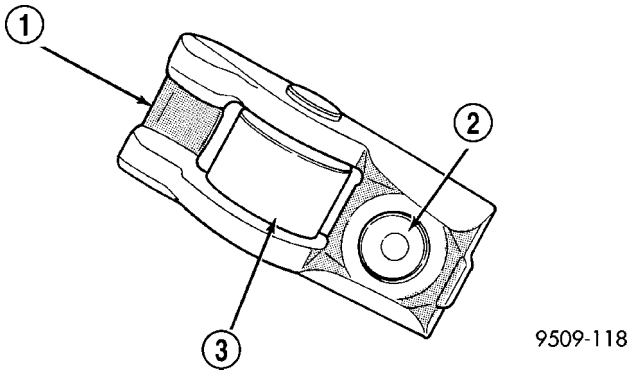

Fig. 29 Rocker Arm

1 - TIP
2 - LASH ADJUSTER POCKET
3 - ROLLER

INSTALLATION

(1) Lubricate rocker arm with clean engine oil.

(2) Using Special Tools 8215-A and 8436 slowly depress valve assembly until rocker arm can be installed on the hydraulic lifter and valve stem (Fig. 28).

(3) Repeat installation procedure for each rocker arm.

(4) Install spark plugs.

(5) Install cylinder head cover. (Refer to 9 - ENGINE/CYLINDER HEAD/CYLINDER HEAD COVER(S) - INSTALLATION)

(6) Connect negative battery cable.

VALVE SPRINGS & SEALS

REMOVAL

REMOVAL - CYLINDER HEAD ON

(1) Disconnect negative battery cable.

(2) Remove timing belt (Refer to 9 - ENGINE/VALVE TIMING/TIMING BELT/CHAIN AND SPROCKETS - REMOVAL).

(3) Remove cylinder head cover (Refer to 9 - ENGINE/CYLINDER HEAD/CYLINDER HEAD COVER(S) - REMOVAL).

(4) Remove camshafts (Refer to 9 - ENGINE/CYLINDER HEAD/CAMSHAFT(S) - REMOVAL).

(5) Rotate crankshaft until piston is at TDC.

(6) With air hose attached to adapter tool installed in spark plug hole, apply 90-120 psi air pressure.

(7) Using Special Tool MD-998772-A with adapter 6779 (Fig. 30), compress valve springs and remove valve locks.

(8) Remove valve spring(s).

(9) Remove valve stem seal(s) by a using valve stem seal tool (Fig. 32).

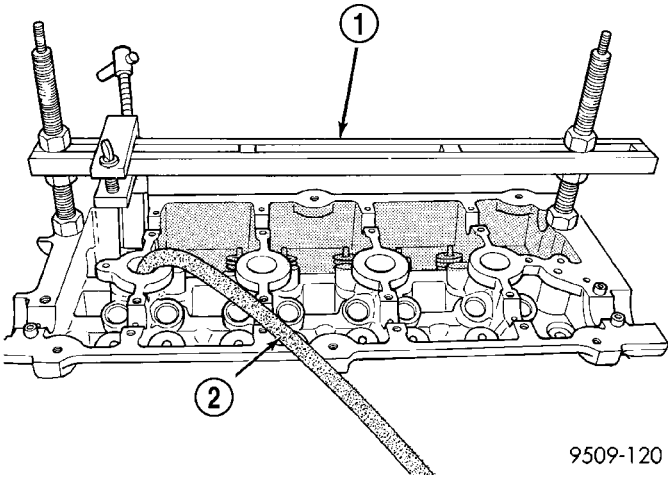

Fig. 30 Valve Spring - Removal/Installation

1 - VALVE SPRING COMPRESSOR MD 998772A
2 - AIR HOSE

VALVE SPRINGS & SEALS (Continued)

REMOVAL - CYLINDER HEAD OFF

(1) With cylinder head removed from cylinder block, compress valve springs using a universal valve spring compressor.

(2) Remove valve retaining locks, valve spring retainers, valve stem seals and valve springs.

(3) Before removing valves, **remove any burrs from valve stem lock grooves to prevent damage to the valve guides.** Identify valves, locks and retainers to insure installation in original location.

(4) Inspect the valves. (Refer to 9 - ENGINE/CYLINDER HEAD/VALVE SPRINGS - INSPECTION)

INSPECTION

(1) Whenever valves have been removed for inspection, reconditioning or replacement, valve springs should be tested for correct tension. Discard the springs that do not meet specifications. The following specifications apply to both intake and exhaust valves springs:

- Valve Closed Nominal Tension—76 lbs. @ 38.0 mm (1.50 in.)
- Valve Open Nominal Tension—136 lbs. @ 29.75 mm (1.17 in.)

(2) Inspect each valve spring for squareness with a steel square and surface plate, test springs from both ends. If the spring is more than 1.5 mm (1/16 inch) out of square, install a new spring.

INSTALLATION

INSTALLATION - CYLINDER HEAD ON

(1) Install valve seal/valve spring seat assembly (Fig. 31). Push the assembly down to seat it onto the valve guide.

(2) Install valve spring and retainer, use Special Tool MD-998772-A with adapter 6779 to compress valve springs only enough to install locks (Fig. 30). Correct alignment of tool is necessary to avoid nicking valve stems.

(3) Remove air hose and install spark plugs.

(4) Install camshafts (Refer to 9 - ENGINE/CYLINDER HEAD/CAMSHAFT(S) - INSTALLATION).

(5) Install cylinder head cover (Refer to 9 - ENGINE/CYLINDER HEAD/CYLINDER HEAD COVER(S) - INSTALLATION).

(6) Install timing belt (Refer to 9 - ENGINE/VALVE TIMING/TIMING BELT/CHAIN AND SPROCKETS - INSTALLATION).

(7) Connect negative battery cable.

INSTALLATION - CYLINDER HEAD OFF

(1) Coat valve stems with clean engine oil and insert in cylinder head.

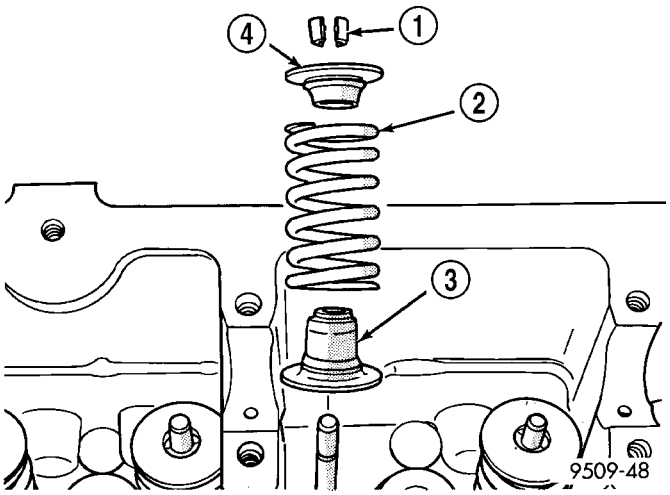

Fig. 31 Valve Stem Seal/Valve Spring Seat

1 - VALVE RETAINING LOCKS
2 - VALVE SPRING
3 - VALVE SEAL AND VALVE SPRING SEAT ASSEMBLY
4 - VALVE SPRING RETAINER

(2) Install new valve stem seals on all valves using a valve stem seal tool (Fig. 32). The valve stem seals should be pushed firmly and squarely over valve guide.

CAUTION: When oversize valves are used, the corresponding oversize valve seal must also be used. Excessive guide wear may result if oversize seals are not used with oversize valves.

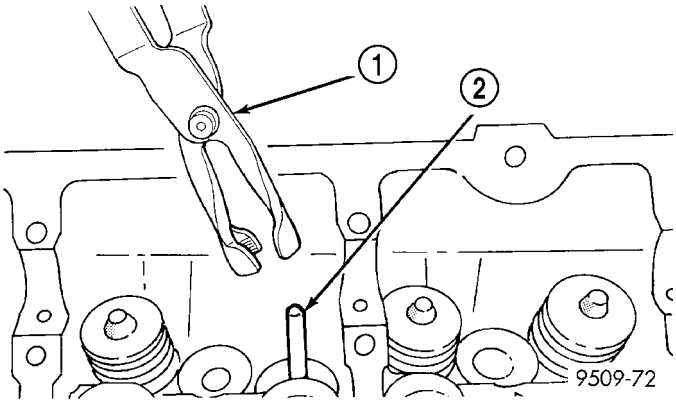

Fig. 32 Valve Stem Oil Seal Tool

1 - VALVE SEAL TOOL
2 - VALVE STEM

(3) Install valve springs and retainers. Compress valve springs only enough to install locks, taking care not to misalign the direction of compression. Nicked valve stems may result from misalignment of the valve spring compressor.

VALVE SPRINGS & SEALS (Continued)

CAUTION: When depressing the valve spring retainers with valve spring compressor the locks can become dislocated. Ensure both locks are in the correct location after removing tool.

(4) Check the valve spring installed height B after refacing the valve and seat (Fig. 33). Make sure measurements are taken from top of spring seat to the bottom surface of spring retainer. If height is greater than 38.75 mm (1.525 in.), install a 0.762 mm (0.030 in.) spacer under the valve spring seat to bring spring height back within specification.

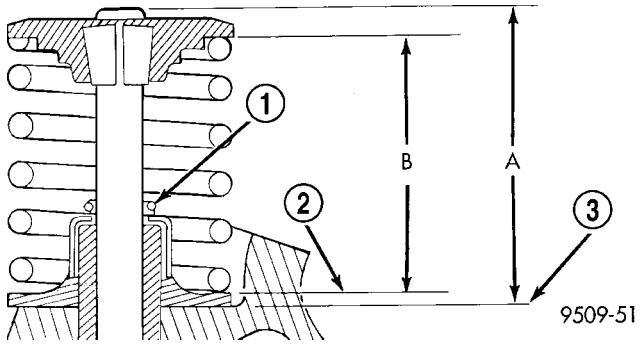

Fig. 33 Checking Spring Installed Height and Valve Tip Height Dimensions

1 - GARTER SPRING
2 - VALVE SPRING SEAT
3 - CYLINDER HEAD SURFACE

ENGINE BLOCK

DESCRIPTION

The cast iron cylinder block is a two-piece assembly, consisting of the cylinder block and bedplate (Fig. 34). The bedplate incorporates the main bearing caps and bolts to the cylinder block. This design offers a much stronger lower end and increased cylinder block rigidity. The rear oil seal retainer is integral with the block. The bedplate and block are serviced as an assembly.

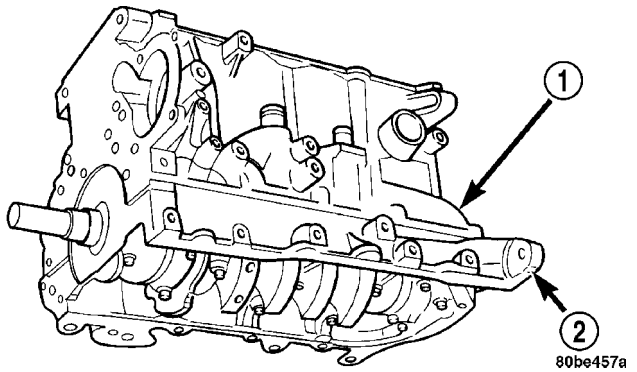

Fig. 34 Cylinder Block and Bedplate

1 - CYLINDER BLOCK
2 - BEDPLATE

STANDARD PROCEDURE - CYLINDER BORE HONING

(1) Used carefully, the cylinder bore resizing hone, recommended tool C-823 or equivalent, equipped with 220 grit stones, is the best tool for this honing procedure. In addition to deglazing, it will reduce taper and out-of-round as well as removing light scuffing, scoring or scratches. Usually a few strokes will clean up a bore and maintain the required limits.

(2) Deglazing of the cylinder walls may be done using a cylinder surfacing hone, recommended tool C-3501 or equivalent, equipped with 280 grit stones, if the cylinder bore is straight and round. 20–60 strokes depending on the bore condition, will be sufficient to provide a satisfactory surface. Use a light honing oil. **Do not use engine or transmission oil, mineral spirits or kerosene.** Inspect cylinder walls after each 20 strokes.

(3) Honing should be done by moving the hone up and down fast enough to get a cross-hatch pattern. When hone marks **intersect** at 40-60 degrees, the cross hatch angle is most satisfactory for proper seating of rings (Fig. 35).

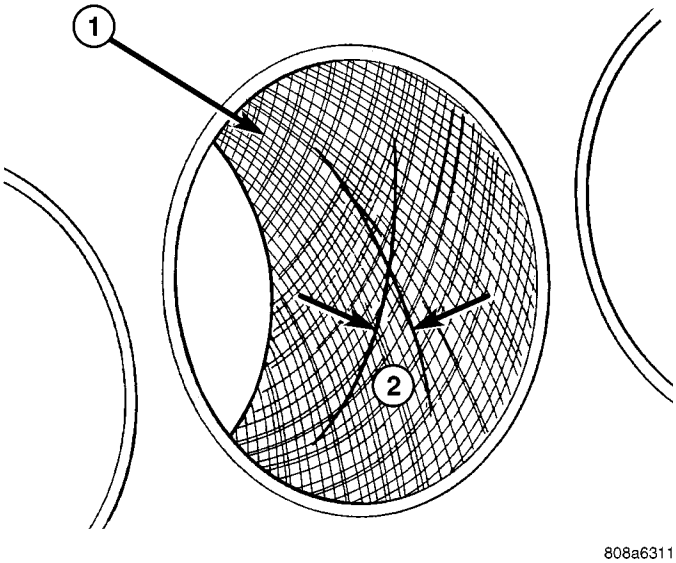

Fig. 35 Cylinder Bore Cross-Hatch Pattern

1 - CROSS-HATCH PATTERN
2 - 40°–60°

(4) A controlled hone motor speed between 200–300 RPM is necessary to obtain the proper cross-hatch angle. The number of up and down strokes per minute can be regulated to get the desired 40–60 degree angle. Faster up and down strokes increase the cross-hatch angle.

(5) After honing, it is necessary that the block be cleaned again to remove all traces of abrasive.

ENGINE BLOCK (Continued)

CAUTION: Ensure all abrasives are removed from engine parts after honing. It is recommended that a solution of soap and hot water be used with a brush and the parts then thoroughly dried. The bore can be considered clean when it can be wiped clean with a white cloth and cloth remains clean. Oil the bores after cleaning to prevent rusting.

CLEANING

Clean cylinder block thoroughly using a suitable cleaning solvent.

INSPECTION

ENGINE BLOCK

(1) Clean cylinder block thoroughly and check all core hole plugs for evidence of leaking.

(2) If new core plugs are to be installed, (Refer to 9 - ENGINE - STANDARD PROCEDURE - ENGINE CORE AND OIL GALLERY PLUGS).

(3) Examine block and cylinder bores for cracks or fractures.

(4) Check block deck surfaces for flatness. Deck surface must be within service limit of 0.1 mm (0.004 in.).

CYLINDER BORE

NOTE: The cylinder bores should be measured at normal room temperature, 21°C (70°F).

The cylinder walls should be checked for out-of-round and taper with Tool C119 or equivalent (Fig. 36) (Refer to 9 - ENGINE - SPECIFICATIONS). If the cylinder walls are badly scuffed or scored, the cylinder block should be replaced, and new pistons and rings fitted.

Measure the cylinder bore at three levels in directions A and B (Fig. 36). Top measurement should be 10 mm (3/8 in.) down and bottom measurement should be 10 mm (3/8 in.) up from bottom of bore. (Refer to 9 - ENGINE - SPECIFICATIONS).

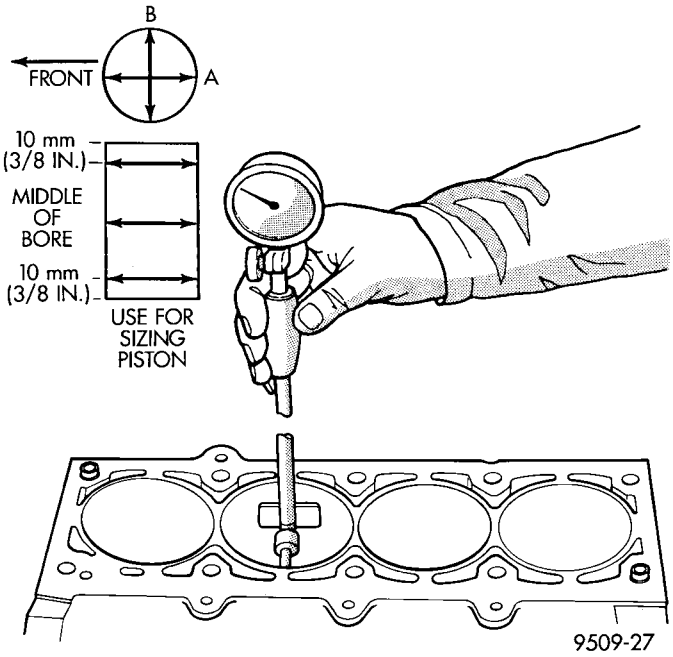

Fig. 36 Checking Cylinder Bore Size

CRANKSHAFT

STANDARD PROCEDURE - MEASURING CRANKSHAFT END PLAY

(1) Mount a dial indicator to front of engine with the locating probe on nose of crankshaft (Fig. 37).

(2) Move crankshaft all the way to the rear of its travel.

(3) Zero the dial indicator.

(4) Move crankshaft all the way to the front and read the dial indicator. (Refer to 9 - ENGINE - SPECIFICATIONS) for end play specification.

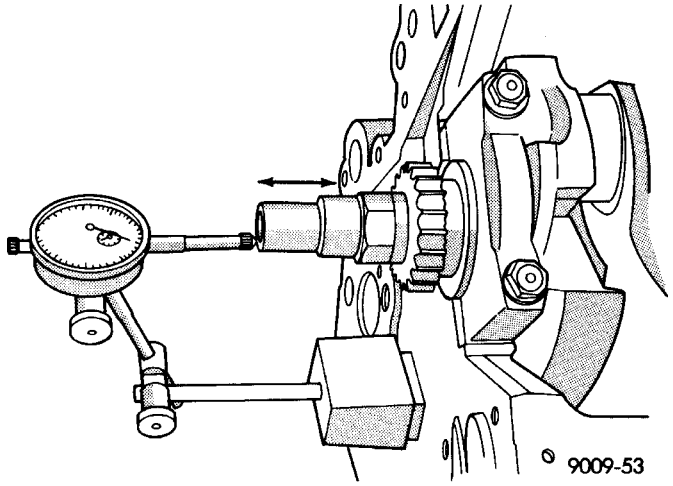

Fig. 37 Checking Crankshaft End Play—Typical

REMOVAL - CRANKSHAFT

NOTE: Crankshaft can not be removed when engine is in vehicle.

(1) Remove engine assembly from vehicle (Refer to 9 - ENGINE - REMOVAL).

(2) Separate transaxle from engine.

(3) Remove drive plate/flex plate.

(4) Remove crankshaft rear oil seal (Refer to 9 - ENGINE/ENGINE BLOCK/CRANKSHAFT OIL SEAL - REAR - REMOVAL).

CRANKSHAFT (Continued)

(5) Mount engine on a suitable repair stand.
(6) Drain engine oil and remove oil filter.
(7) Remove crankshaft vibration damper (Refer to 9 - ENGINE/ENGINE BLOCK/VIBRATION DAMPER - REMOVAL).
(8) Remove engine mount support bracket.
(9) Remove front timing belt covers (Refer to 9 - ENGINE/VALVE TIMING/TIMING BELT COVER(S) - REMOVAL).
(10) Remove the timing belt (Refer to 9 - ENGINE/VALVE TIMING/TIMING BELT AND SPROCKETS - REMOVAL).
(11) Remove the rear timing belt cover (Refer to 9 - ENGINE/VALVE TIMING/TIMING BELT COVER(S) - REMOVAL).
(12) Remove the oil pan (Refer to 9 - ENGINE/LUBRICATION/OIL PAN - REMOVAL).
(13) Remove oil pump pick-up tube.
(14) Remove the crankshaft sprocket and oil pump (Refer to 9 - ENGINE/LUBRICATION/OIL PUMP - REMOVAL).
(15) Remove balance shafts and housing assembly (Refer to 9 - ENGINE/VALVE TIMING/BALANCE SHAFT - REMOVAL).
(16) Remove crankshaft position sensor.

NOTE: If piston/connecting rod replacement is necessary, remove cylinder head (Refer to 9 - ENGINE/CYLINDER HEAD - REMOVAL).

(17) Using a permanent ink or paint marker, identify cylinder number on each connecting rod cap (Fig. 38).

CAUTION: DO NOT use a number stamp or a punch to mark connecting rods. Damage to connecting rod could occur.

(18) Remove all connecting rod bolts and caps. Care should be taken not to damage the fracture rod and cap surfaces.

NOTE: Do not reuse connecting rod bolts.

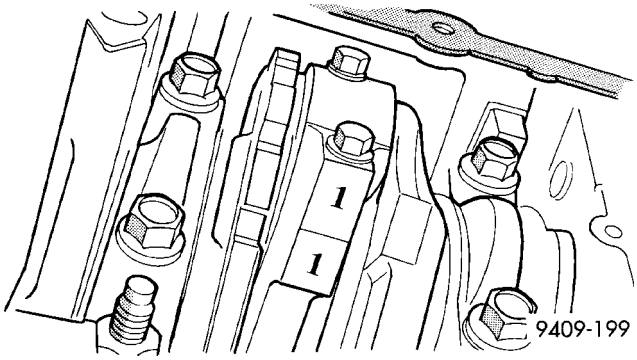

Fig. 38 Identify Connecting Rod to Cylinder

(19) Remove all bedplate bolts from the engine block (Fig. 39).
(20) Using a mallet gently tap the bedplate loose from the engine block dowel pins.

CAUTION: Do not pry up on one side of the bedplate. Damage may occur to cylinder block to bedplate alignment and thrust bearing.

(21) Bedplate should be removed evenly from the cylinder block dowel pins to prevent damage to the dowel pins and thrust bearing.

CAUTION: Use extreme care when handling crankshaft. Tone wheel damage can occur if crankshaft is mis-handled.

(22) Lift out crankshaft from cylinder block. Do not damage the main bearings or journals when removing the crankshaft.

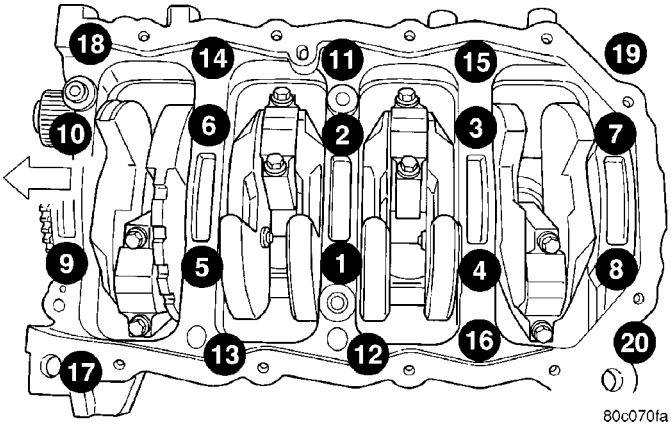

Fig. 39 Bedplate Bolt Tightenening Sequence

INSPECTION

The crankshaft journals should be checked for excessive wear, taper and scoring (Fig. 40). Limits of taper or out of round on any crankshaft journals should be held to 0.025 mm (0.001 in.). Journal grinding should not exceed 0.305 mm (0.012 in.) under the standard journal diameter. DO NOT grind thrust faces of No. 3 main bearing. DO NOT nick crank pin or bearing fillets. After grinding, remove rough edges from crankshaft oil holes and clean out all passages.

CAUTION: With the nodular cast iron crankshafts, it is important that the final paper or cloth polish be in the same direction as normal rotation in the engine.

CRANKSHAFT (Continued)

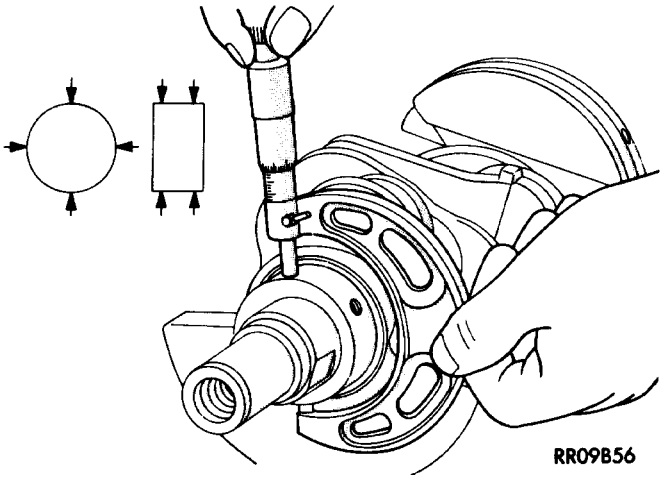

Fig. 40 Crankshaft Journal Measurements

INSTALLATION - CRANKSHAFT

CRANKSHAFT MAIN BEARING LOCATION

The crankshaft is supported in five main bearings. All upper and lower bearing shells in the crankcase have oil grooves and holes (Fig. 41). Crankshaft end play is controlled by a flanged bearing on the number three main bearing journal.

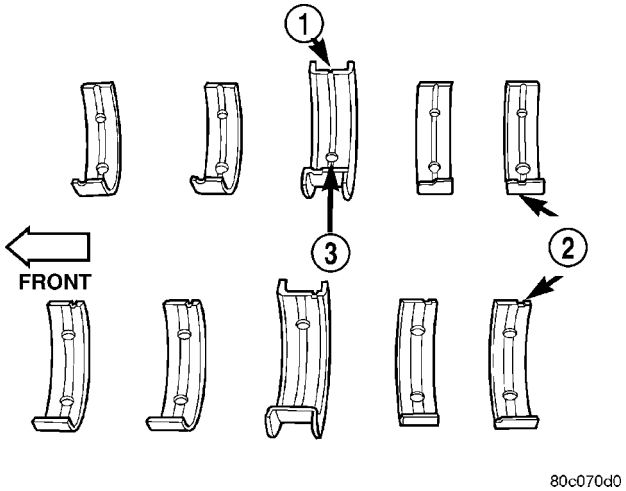

Fig. 41 Main Bearing Identification

1 - OIL GROOVE
2 - MAIN BEARINGS
3 - OIL HOLE

(1) Install the main bearing upper shells with the lubrication groove and oil hole in the engine block (Fig. 42).

(2) Make certain oil holes in block line up with oil hole in bearings and bearing tabs seat in the block tab slots.

CAUTION: Use extreme care when handling crankshaft. Tone wheel damage can occur if crankshaft is mis-handled.

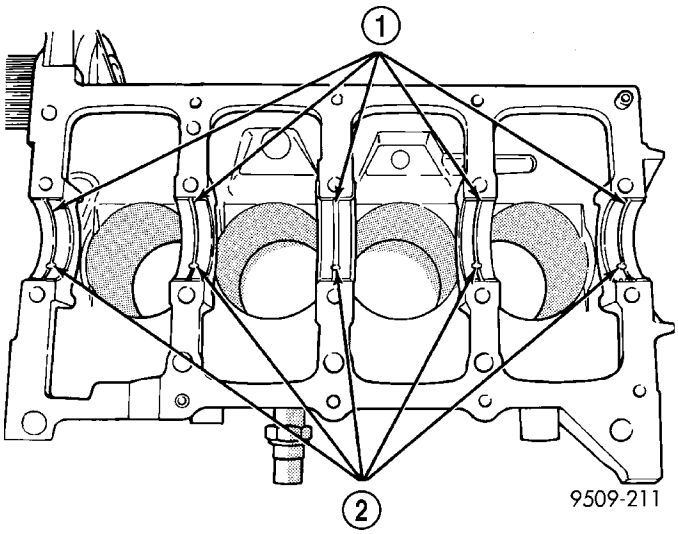

Fig. 42 Installing Main Bearing Upper Shell

1 - LUBRICATION GROOVES
2 - OIL HOLES

CAUTION: Do not get oil on the bedplate mating surface. It will affect the sealer ability to seal the bedplate to cylinder block.

(3) Oil the bearings and journals. Install crankshaft in engine block.

CAUTION: Use only the specified anaerobic sealer on the bedplate or damage may occur to the engine.

(4) Apply 1.5 to 2.0 mm (0.059 to 0.078 in.) bead of Mopar® Bed Plate Sealant to the bed plate as shown in (Fig. 43).

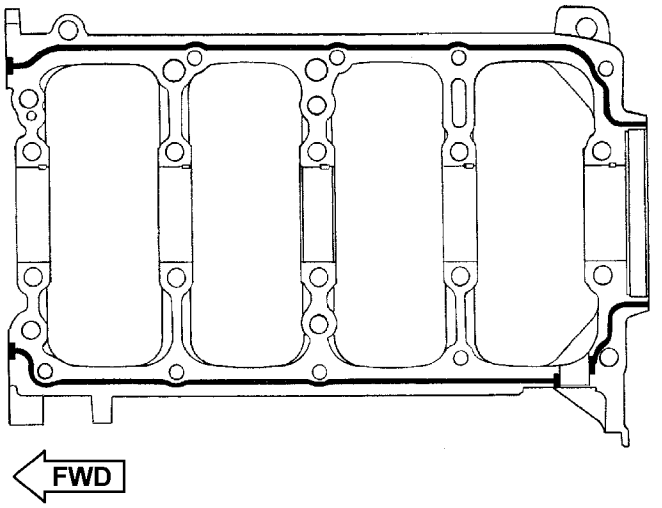

Fig. 43 BEDPLATE SEALING

CRANKSHAFT (Continued)

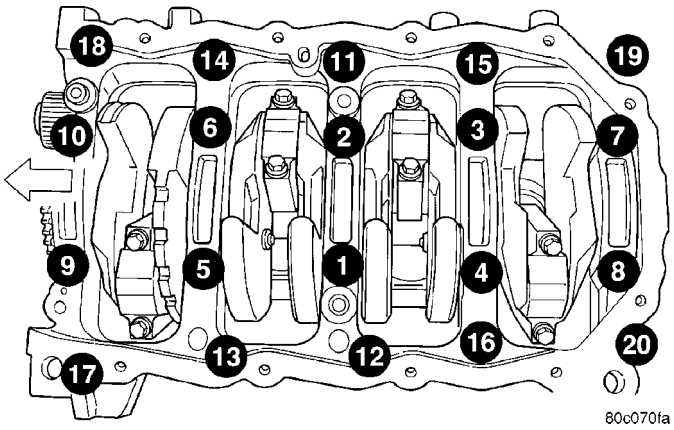

Fig. 44 Bedplate Bolt Torque Sequence

(5) Install lower main bearings into main bearing cap/bedplate. Make certain the bearing tabs are seated into the bedplate slots. Install the main bearing/bedplate into engine block.

(6) Before installing the bolts the threads should be oiled with clean engine oil, wipe off any excess oil.

(7) Install main bearing bedplate to engine block bolts 11, 17, and 20 finger tight. Tighten these bolts down together until the bedplate contacts the cylinder block (Fig. 44).

(8) To ensure correct thrust bearing alignment, perform the following steps:

- Step 1: Rotate crankshaft until number 4 piston is at TDC.
- Step 2: Move crankshaft rearward to limits of travel.
- Step 3: Then, move crankshaft forward to limits of travel.
- Step 4: Wedge an appropriate tool between the rear of the cylinder block **(NOT BED PLATE)** and the rear crankshaft counterweight. This will hold the crankshaft in it's furthest forward position.
- Step 5: Install and tighten bolts (1–10) in sequence shown in (Fig. 44) to 41 N·m (30 ft. lbs.).
- Step 6: Remove wedge tool used to hold crankshaft.

(9) Tighten bolts (1–10) again to 41 N·m (30 ft. lbs.) in sequence shown in (Fig. 44).

(10) Install main bearing bedplate to engine block bolts (11–20), and torque each bolt to 28 N·m (250 in. lbs.) in sequence shown in (Fig. 44).

(11) Tighten bolts (1–10) to 75 N·m (55 ft. lbs.) in sequence shown in (Fig. 44).

(12) Tighten bolts (11–20) again to 28 N·m (250 in. lbs.) in sequence shown in (Fig. 44).

(13) After the main bearing bedplate is installed, check the crankshaft turning torque. The turning torque should not exceed 5.6 N·m (50 in. lbs.).

(14) Check crankshaft end play (Refer to 9 - ENGINE/ENGINE BLOCK/CRANKSHAFT - STANDARD PROCEDURE).

(15) Install connecting rod bearings and caps. **Do Not Reuse Connecting Rod Bolts.** Torque connecting rod bolts to 27 N·m (20 ft. lbs.) plus 1/4 turn.

(16) Install balance shafts and housing assembly (Refer to 9 - ENGINE/VALVE TIMING/BALANCE SHAFT - INSTALLATION).

(17) Install the oil pump (Refer to 9 - ENGINE/LUBRICATION/OIL PUMP - INSTALLATION).

(18) Install oil pump pick-up tube. Torque fastener to 23 N·m (200 in. lbs.).

(19) Install the oil pan (Refer to 9 - ENGINE/LUBRICATION/OIL PAN - INSTALLATION).

(20) Install crankshaft position sensor.

(21) Install cylinder head if it was removed (Refer to 9 - ENGINE/CYLINDER HEAD - INSTALLATION).

(22) Install the timing belt rear cover (Refer to 9 - ENGINE/VALVE TIMING/TIMING BELT COVER(S) - INSTALLATION).

(23) Install crankshaft sprocket (Refer to 9 - ENGINE/VALVE TIMING/TIMING BELT AND SPROCKETS - INSTALLATION).

(24) Install the timing belt (Refer to 9 - ENGINE/VALVE TIMING/TIMING BELT AND SPROCKETS - INSTALLATION).

(25) Install the timing belt front covers (Refer to 9 - ENGINE/VALVE TIMING/TIMING BELT COVER(S) - INSTALLATION).

(26) Install engine mount support bracket.

(27) Install crankshaft vibration damper (Refer to 9 - ENGINE/ENGINE BLOCK/VIBRATION DAMPER - INSTALLATION).

(28) Install **NEW** oil filter.

(29) Install crankshaft rear oil seal (Refer to 9 - ENGINE/ENGINE BLOCK/CRANKSHAFT OIL SEAL - REAR - INSTALLATION).

(30) Install flex plate. Apply Mopar® Lock & Seal Adhesive to bolt threads and tighten to 95 N·m (70 ft. lbs.).

(31) Attach transaxle to engine. Tighten attaching bolts to 101 N·m (75 ft. lbs.).

(32) Install the engine assembly (Refer to 9 - ENGINE - INSTALLATION).

CRANKSHAFT OIL SEAL - FRONT

REMOVAL

(1) Disconnect negative battery cable.

(2) Remove accessory drive belts (Refer to 7 - COOLING/ACCESSORY DRIVE/DRIVE BELTS - REMOVAL).

(3) Remove crankshaft damper (Refer to 9 - ENGINE/ENGINE BLOCK/VIBRATION DAMPER - REMOVAL).

(4) Remove timing belt (Refer to 9 - ENGINE/VALVE TIMING/TIMING BELT/CHAIN AND SPROCKETS - REMOVAL).

(5) Remove crankshaft sprocket using Special Tool 6793 and insert C-4685-C2 (Fig. 45).

CAUTION: Do not nick shaft seal surface or seal bore.

(6) Use Tool 6771 to remove front crankshaft oil seal (Fig. 46). Be careful not to damage the seal surface of cover.

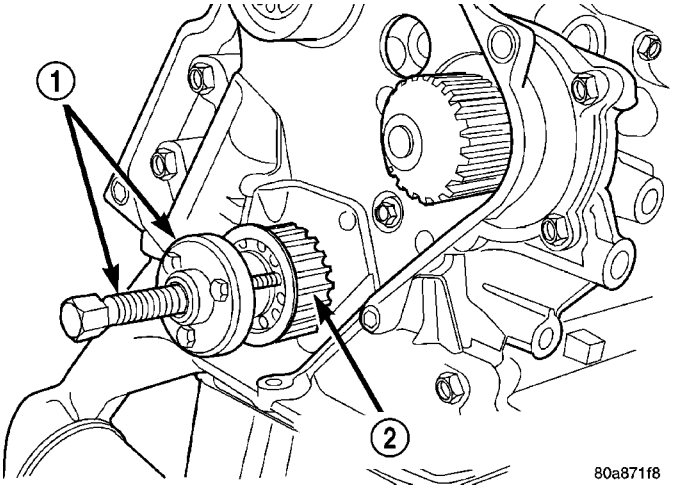

Fig. 45 Crankshaft Sprocket—Removal

1 - SPECIAL TOOL 6793
2 - CRANKSHAFT SPROCKET

INSTALLATION

(1) Install new seal by using Special Tool 6780 (Fig. 47).

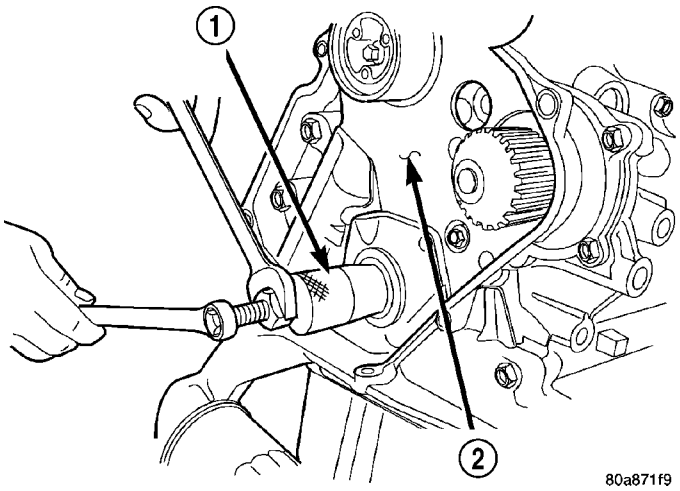

Fig. 46 Front Crankshaft Oil Seal—Removal

1 - SPECIAL TOOL 6771
2 - REAR TIMING BELT COVER

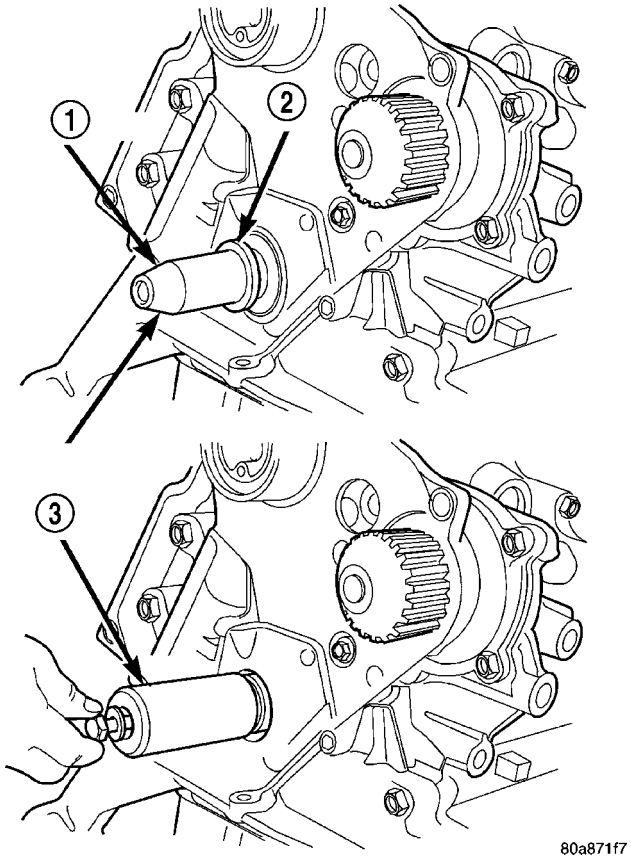

Fig. 47 Front Crankshaft Oil Seal—Installation

1 - PROTECTOR
2 - SEAL
3 - SPECIAL TOOL 6780

CRANKSHAFT OIL SEAL - FRONT (Continued)

(2) Place seal into opening with seal spring towards the inside of engine. Install seal until flush with cover.

(3) Install crankshaft sprocket using Special Tool 6792 (Fig. 48).

(4) Install timing belt and timing belt covers (Refer to 9 - ENGINE/VALVE TIMING/TIMING BELT/CHAIN AND SPROCKETS - INSTALLATION).

(5) Install crankshaft damper (Refer to 9 - ENGINE/ENGINE BLOCK/VIBRATION DAMPER - INSTALLATION).

(6) Install accessory drive belts (Refer to 7 - COOLING/ACCESSORY DRIVE/DRIVE BELTS - INSTALLATION).

(7) Connect negative battery cable.

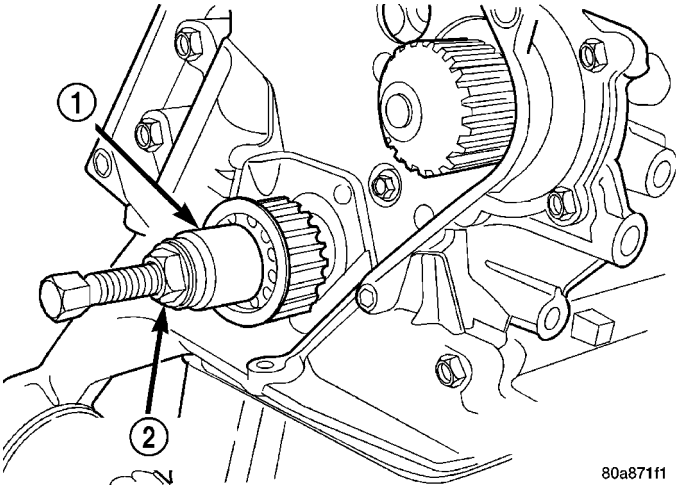

Fig. 48 Crankshaft Sprocket—Installation

1 - SPECIAL TOOL 6792
2 - TIGHTEN NUT TO INSTALL

CRANKSHAFT OIL SEAL - REAR

REMOVAL

(1) Remove transaxle (Refer to 21 - TRANSMISSION/TRANSAXLE/AUTOMATIC - 41TE - REMOVAL).

(2) Remove flex plate (Refer to 9 - ENGINE/ENGINE BLOCK/FLEX PLATE - REMOVAL).

(3) Insert a 3/16 flat bladed screwdriver between the dust lip and the metal case of the crankshaft seal. Angle the screwdriver (Fig. 49)through the dust lip against metal case of the seal. Pry out seal.

CAUTION: Do not permit the screwdriver blade to contact crankshaft seal surface. Contact of the screwdriver blade against crankshaft edge (chamfer) is permitted.

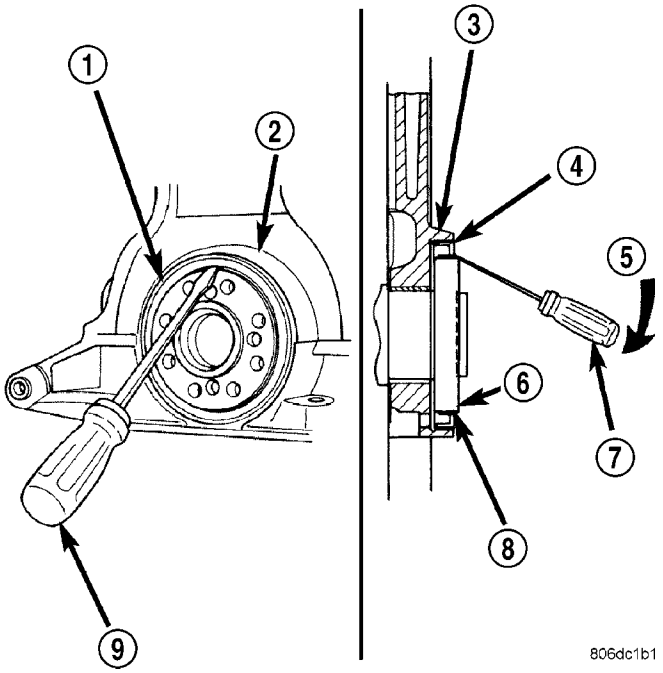

Fig. 49 Rear Crankshaft Oil Seal - Removal

1 - REAR CRANKSHAFT SEAL
2 - ENGINE BLOCK
3 - ENGINE BLOCK
4 - REAR CRANKSHAFT SEAL METAL CASE
5 - PRY IN THIS DIRECTION
6 - CRANKSHAFT
7 - SCREWDRIVER
8 - REAR CRANKSHAFT SEAL DUST LIP
9 - SCREWDRIVER

INSTALLATION

CAUTION: If burr or scratch is present on the crankshaft edge (chamfer), cleanup with 400 grit sand paper to prevent seal damage during installation of new seal.

NOTE: When installing seal, no lube on seal is needed.

(1) Place Special Tool 6926-1 Seal Guide on crankshaft (Fig. 50).

(2) Position seal over guide tool (Fig. 50). Guide tool should remain on crankshaft during installation of seal. Ensure that the lip of the seal is facing towards the crankcase during installation.

CAUTION: If the seal is driven into the block past flush, this may cause an oil leak.

(3) Drive the seal into the block using Special Tool 6926-2 and handle C-4171 (Fig. 51) until the tool bottoms out against the block (Fig. 52).

CRANKSHAFT OIL SEAL - REAR (Continued)

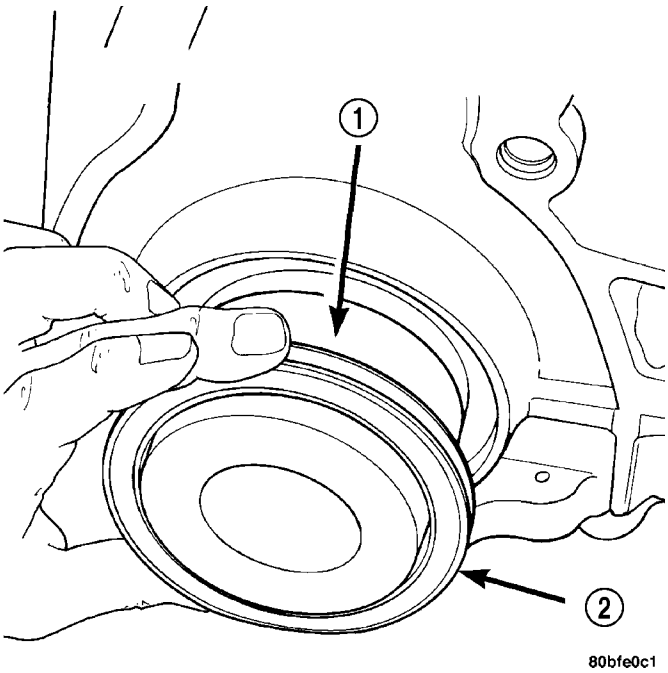

Fig. 50 Rear Crankshaft Seal and Special Tool 6926-1

1 - SPECIAL TOOL 6926–1 PILOT
2 - SEAL

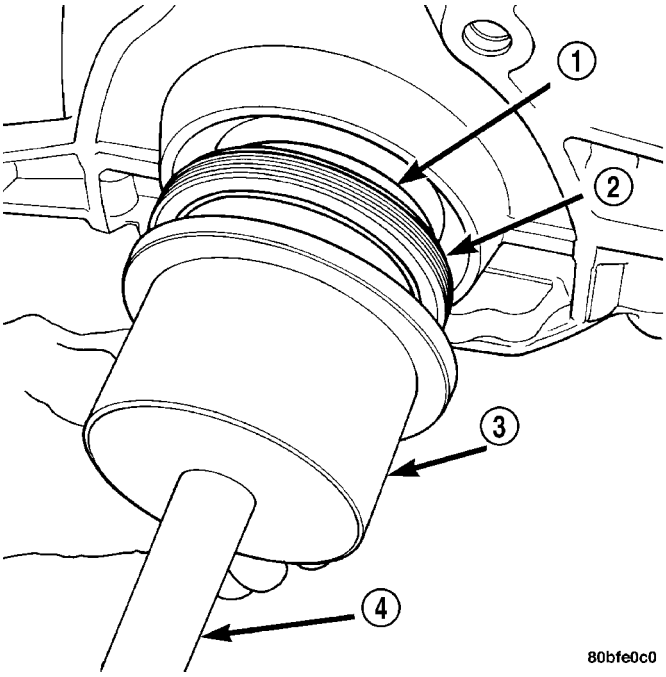

Fig. 51 Crankshaft Seal and Special Tools 6926-2 & C-4171

1 - SPECIAL TOOL 6926–1 PILOT
2 - SEAL
3 - SPECIAL TOOL 6926–2 INSTALLER
4 - SPECIAL TOOL C-4171

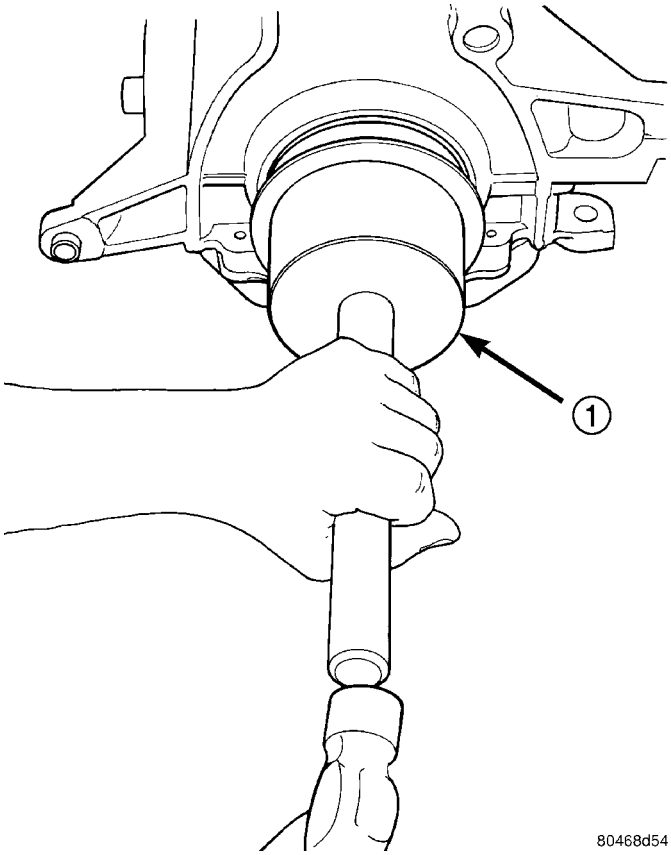

Fig. 52 Rear Crankshaft Seal—Installation

1 - SPECIAL TOOL 6926–2 INSTALLER

(4) Install flex plate. Apply Mopar® Lock & Seal Adhesive to bolt threads and tighten bolts to 95 N·m (70 ft. lbs.).

(5) Install transaxle (Refer to 21 - TRANSMISSION/TRANSAXLE/AUTOMATIC - 41TE - INSTALLATION).

FLEX PLATE

REMOVAL

(1) Remove the transaxle (Refer to 21 - TRANSMISSION/TRANSAXLE/AUTOMATIC - 41TE - REMOVAL).

(2) Remove the flex plate attaching bolts (Fig. 53).

(3) Remove the flex plate (Fig. 53).

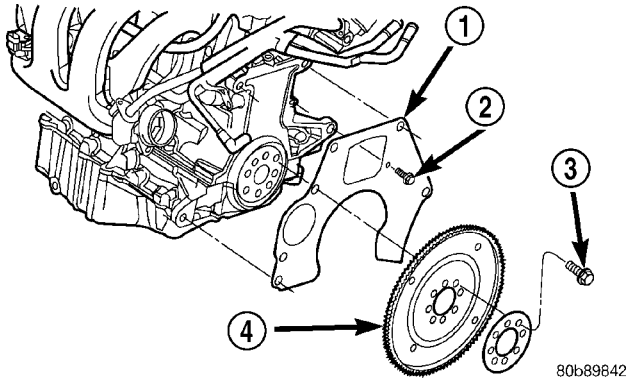

Fig. 53 Flex Plate

1 - ADAPTOR PLATE
2 - BOLT
3 - BOLT (QTY. 8)
4 - FLEX PLATE

INSTALLATION

(1) Position the drive plate on crankshaft (Fig. 53).

(2) Apply Mopar® Lock & Seal Adhesive to flex plate bolt threads.

(3) Install the flex plate bolts and tighten to 95 N·m (70 ft. lbs.) (Fig. 53).

(4) Install the transaxle (Refer to 21 - TRANSMISSION/TRANSAXLE/AUTOMATIC - 41TE - INSTALLATION).

PISTON & CONNECTING ROD

DESCRIPTION

The pistons are made of a cast aluminum alloy. The pistons have pressed-in pins attached to forged powdered metal connecting rods. The pistons pin is offset 1 mm (0.0394 in.) towards the thrust side of the piston. The connecting rods are a cracked cap design and are not repairable. Hex head cap screws are used to provide alignment and durability in the assembly. The pistons and connecting rods are serviced as an assembly.

STANDARD PROCEDURE - PISTON TO CYLINDER BORE FITTING

NOTE: Pistons and cylinder bores should be measured at normal room temperature, 21°C (70°F).

Piston and cylinder wall must be clean and dry. Piston diameter should be measured 90 degrees to piston pin.

Piston measurement should be taken approximately 14 mm (0.551 in.) from the bottom of the skirt as shown in (Fig. 54)

Cylinder bores should be measured halfway down the cylinder bore and transverse (measurement location B) to the engine crankshaft center line shown in (Fig. 55). Refer to for Engine Specifications (Refer to 9 - ENGINE - SPECIFICATIONS). Correct piston to bore clearance must be established in order to assure quiet and economical operation.

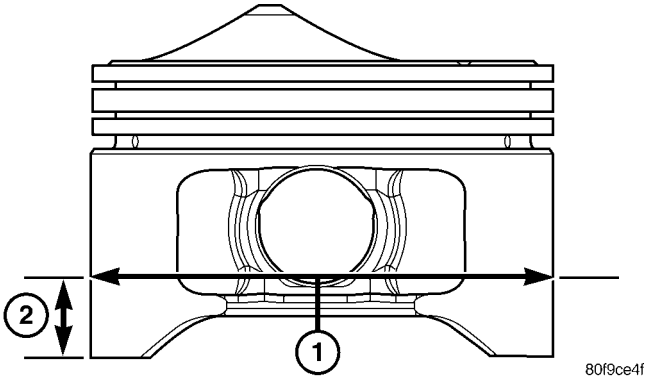

Fig. 54 Piston Measurement

1 - PISTON DIAMETER
2 - 14 mm (0.551 in.)

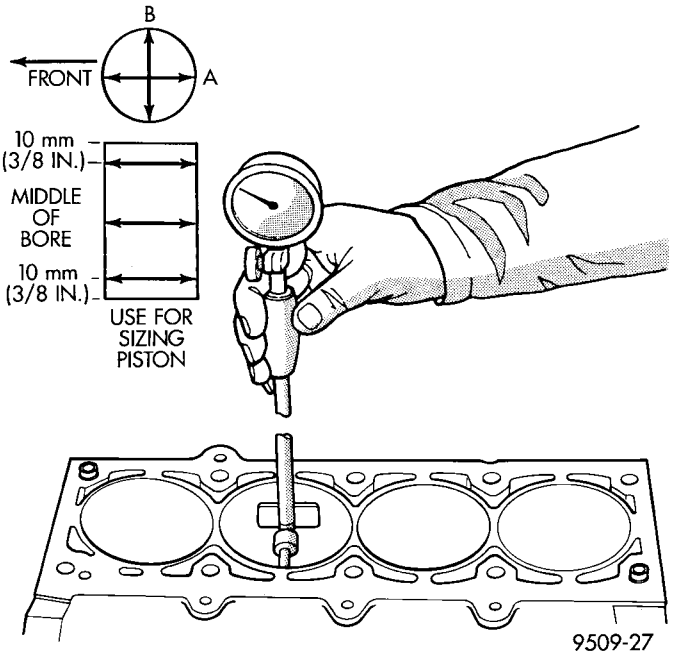

Fig. 55 Checking Cylinder Bore

PISTON & CONNECTING ROD (Continued)

REMOVAL

(1) Remove cylinder head (Refer to 9 - ENGINE/CYLINDER HEAD - REMOVAL).

(2) Remove oil pan (Refer to 9 - ENGINE/LUBRICATION/OIL PAN - REMOVAL).

(3) Remove Balance Shaft Carrier Assembly (Refer to 9 - ENGINE/VALVE TIMING/BALANCE SHAFT CARRIER - REMOVAL).

(4) Remove top ridge of cylinder bores with a reliable ridge reamer before removing pistons from cylinder block. **Be sure to keep tops of pistons covered during this operation**.

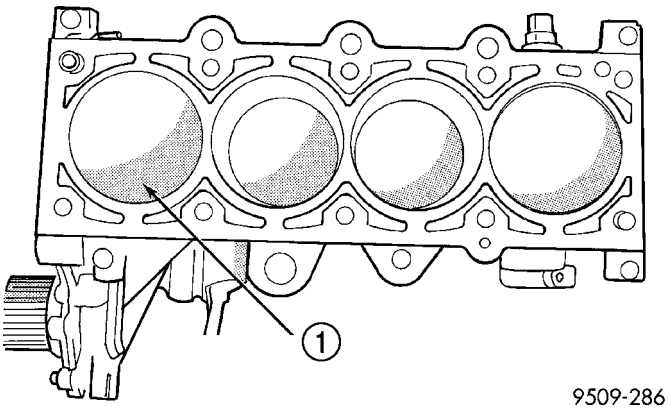

Fig. 56 Piston Markings

1 - DIRECTIONAL ARROW WILL BE IMPRINTED IN THIS AREA

(5) Pistons have a directional stamping in the front half of the piston facing towards the **front** of engine (Fig. 56).

(6) Pistons and connecting rods must be removed from top of cylinder block. Rotate crankshaft so that each connecting rod is centered in cylinder bore.

(7) Using a permanent ink or paint marker, identify cylinder number on each connecting rod cap (Fig. 57).

CAUTION: DO NOT use a number stamp or a punch to mark connecting rods. Damage to connecting rod could occur.

(8) Remove connecting rod bolts and cap. Care should be taken not to damage the fracture rod and cap surfaces.

NOTE: Do not reuse connecting rod bolts.

CAUTION: Care must be taken not to damage the fractured rod and cap joint surfaces, as engine damage many occur.

(9) To protect crankshaft journal and fractured rod surfaces, install Special Tool 8189, connecting rod guides onto connecting rod (Fig. 58). Carefully push each piston and rod assembly out of cylinder bore.

(10) Remove Special Tool 8189, connecting rod guides and re-install bearing cap on the mating rod.

NOTE: Piston and rods are serviced as an assembly.

(11) Repeat procedure for each piston and connecting rod assembly.

(12) Remove piston rings (Refer to 9 - ENGINE/ENGINE BLOCK/PISTON RINGS - REMOVAL).

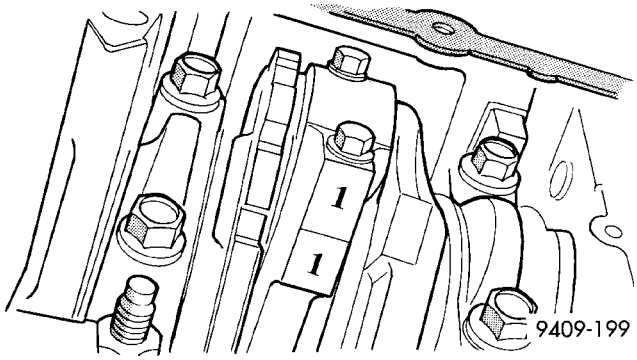

Fig. 57 Identify Connecting Rod to Cylinder

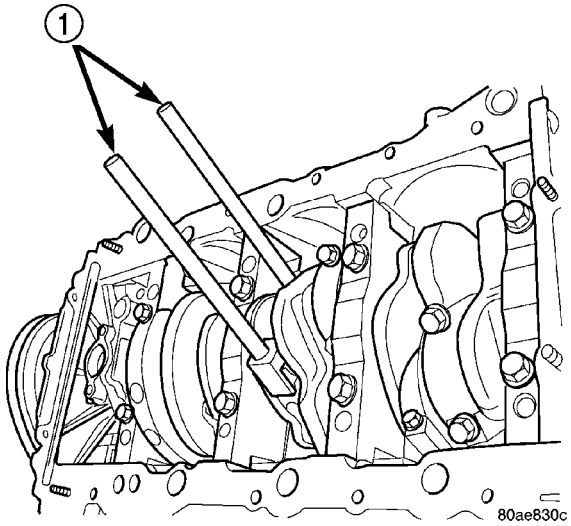

Fig. 58 Connecting Rod Guides—Typical

1 - SPECIAL TOOL 8189 CONNECTING ROD GUIDES

PISTON & CONNECTING ROD (Continued)

INSTALLATION

(1) Install piston rings on piston (Refer to 9 - ENGINE/ENGINE BLOCK/PISTON RINGS - INSTALLATION)

(2) Before installing pistons and connecting rod assemblies into the bore, be sure that compression ring gaps are staggered so that neither is in line with oil ring rail gap (Fig. 59).

(3) Before installing the ring compressor, make sure the oil ring expander ends are butted and the rail gaps located as shown in (Fig. 59). As viewed from top.

(4) Immerse the piston head and rings in clean engine oil, slide the ring compressor, over the piston (Fig. 60). **Be sure position of rings does not change during this operation** .

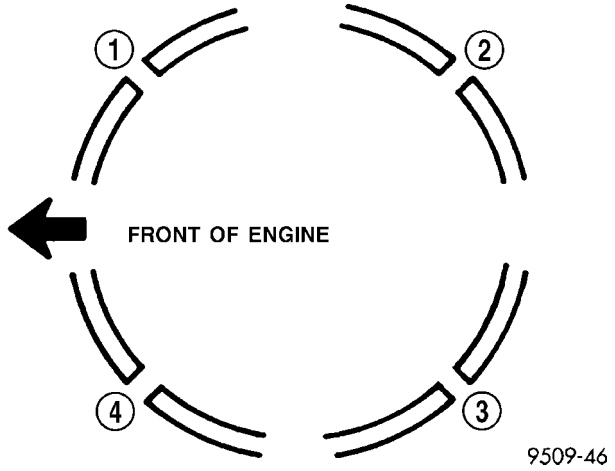

Fig. 59 Piston Ring End Gap Position

1 - GAP OF LOWER SIDE RAIL
2 - NO. 1 RING GAP
3 - GAP OF UPPER SIDE RAIL
4 - NO. 2 RING GAP AND SPACER EXPANDER GAP

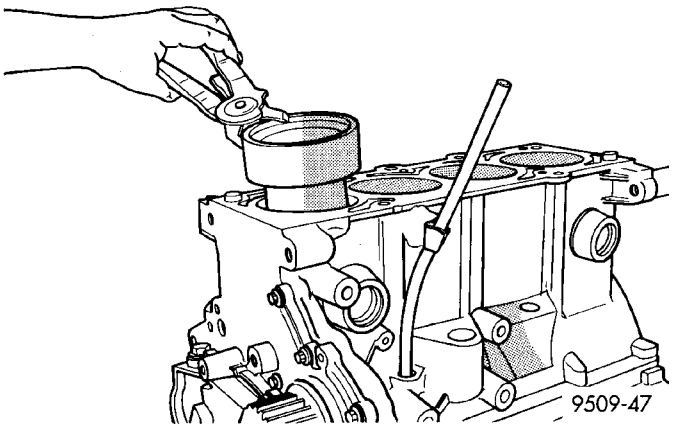

Fig. 60 Piston—Installation

(5) The directional stamp on the piston should face toward the front of the engine (Fig. 56).

(6) Rotate crankshaft so that the connecting rod journal is on the center of the cylinder bore. Lubricate connecting rod journal with clean engine oil.

(7) Install connecting rod upper bearing half into connecting rod. Install Special Tool 8189, connecting rod guides onto connecting rod (Fig. 58).

(8) Tap the piston down in cylinder bore, using a hammer handle. At the same time, guide connecting rod into position on connecting rod journal.

(9) Remove Special Tool 8189, connecting rod guides.

NOTE: The connecting rod cap bolts should not be reused.

(10) Before installing the **NEW** bolts, the threads should be coated with clean engine oil.

(11) Install connecting rod lower bearing half into connecting rod cap. Install connecting rod cap.

(12) Install each bolt finger tight then alternately torque each bolt to assemble the cap properly.

(13) Tighten the connecting rod bolts using the 2 step torque-turn method. Tighten according to the following values:

CAUTION: Do not use a torque wrench for the second step.

1. Tighten the bolts to 27 N·m (20 ft. lbs.).
2. Tighten the connecting rod bolts an additional **1/4 TURN.**

(14) Using a feeler gauge, check connecting rod side clearance (Fig. 61). (Refer to 9 - ENGINE - SPECIFICATIONS) for connecting rod side clearance.

(15) Install Balance Shaft Carrier Assembly (Refer to 9 - ENGINE/VALVE TIMING/BALANCE SHAFT CARRIER - INSTALLATION).

(16) Install oil pan (Refer to 9 - ENGINE/LUBRICATION/OIL PAN - INSTALLATION).

(17) Install cylinder head (Refer to 9 - ENGINE/CYLINDER HEAD - INSTALLATION).

CONNECTING ROD BEARINGS

STANDARD PROCEDURE

CONNECTING ROD - FITTING

(1) For measuring connecting rod bearing clearance procedure and use of Plastigage(Refer to 9 - ENGINE - STANDARD PROCEDURE). For bearing clearance refer to Engine Specifications. (Refer to 9 - ENGINE - SPECIFICATIONS)

CONNECTING ROD BEARINGS (Continued)

NOTE: The rod bearing bolts should not be reused.

(2) Before installing the **NEW** bolts the threads should be oiled with clean engine oil.

(3) Install each bolt finger tight then alternately torque each bolt to assemble the cap properly.

(4) Tighten the connecting rod bolts using the 2 step torque-turn method. Tighten according to the following values:

CAUTION: Do not use a torque wrench for the second step.

1. Tighten the bolts to 27 N·m (20 ft. lbs.).
2. Tighten the connecting rod bolts an additional **1/4 TURN.**

(5) Using a feeler gauge, check connecting rod side clearance (Fig. 61). Refer to clearance specifications (Refer to 9 - ENGINE - SPECIFICATIONS).

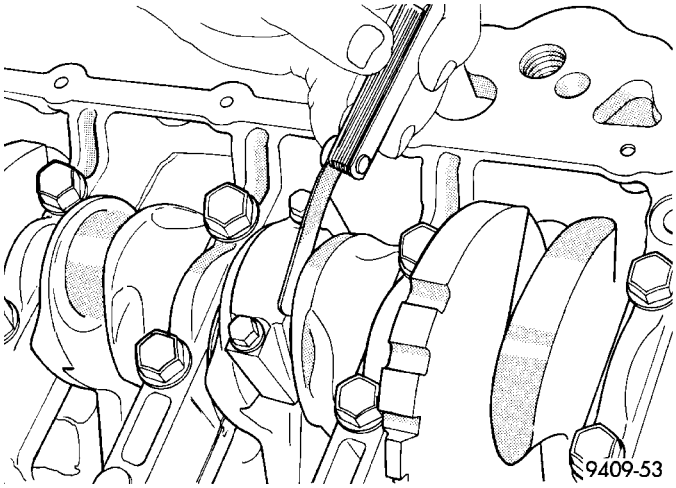

Fig. 61 Connecting Rod Side Clearance

PISTON RINGS

STANDARD PROCEDURE

PISTON RING - FITTING

(1) Wipe cylinder bore clean. Insert ring and push down with piston to ensure it is square in bore. The ring gap measurement must be made with the ring positioning at least 12 mm (0.50 inch) from bottom of cylinder bore. Check gap with feeler gauge (Fig. 62). Refer to Engine Specifications.

(2) Check piston ring to groove side clearance (Fig. 63). Refer to Engine Specifications.

REMOVAL

(1) Using a suitable ring expander, remove upper and intermediate piston rings (Fig. 64).

(2) Remove the upper oil ring side rail, lower oil ring side rail and then oil ring expander from piston.

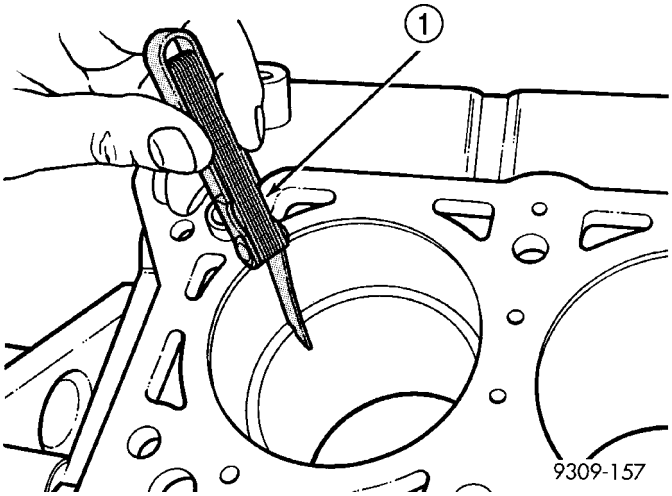

Fig. 62 Piston Ring Gap

1 - FEELER GAUGE

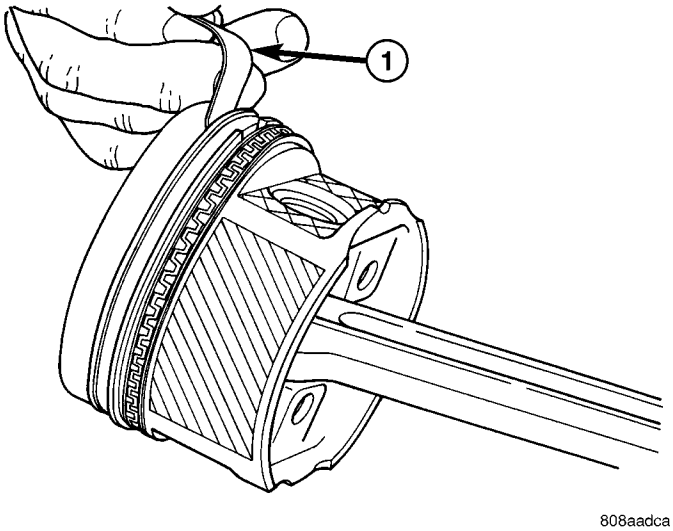

Fig. 63 Piston Ring Side Clearance

1 - FEELER GAUGE

(3) Clean ring grooves of any carbon deposits.

INSTALLATION

NOTE: The identification mark on face of upper and intermediate piston rings must point toward top of piston.

Install rings with manufacturers identification mark facing up, to the top of the piston (Fig. 65).

CAUTION: Install piston rings in the following order:

1. Oil ring expander.
2. Upper oil ring side rail.
3. Lower oil ring side rail.

PISTON RINGS (Continued)

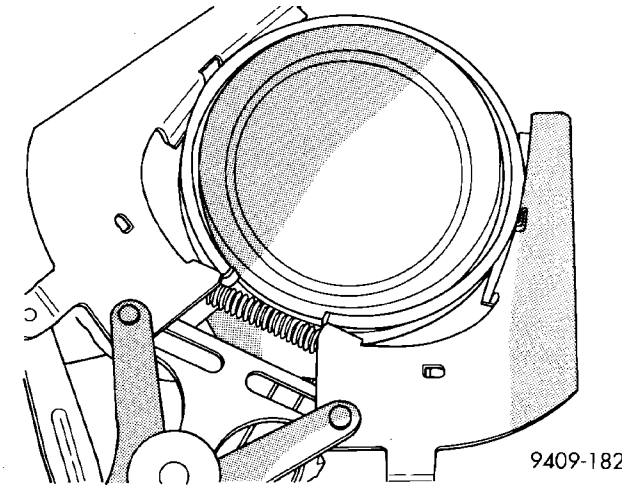

Fig. 64 Piston Rings—Removing and Installing

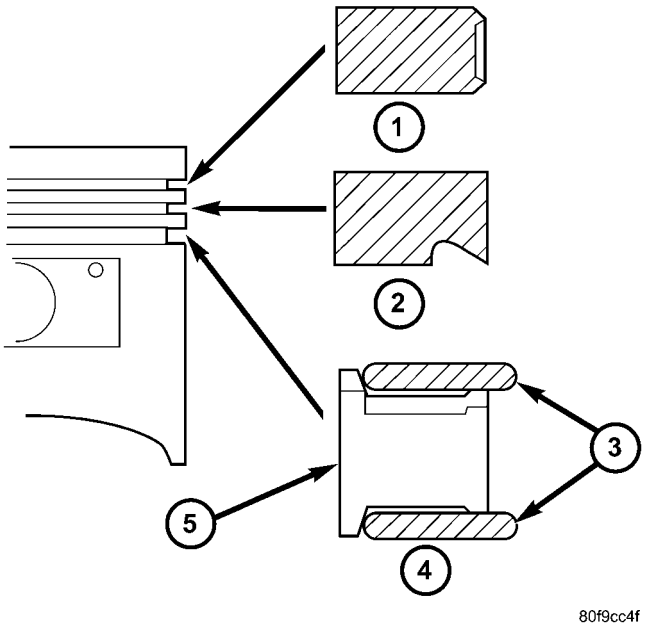

Fig. 65 Piston Ring Installation

1 - NO. 1 PISTON RING
2 - NO. 2 PISTON RING
3 - SIDE RAIL
4 - OIL RING
5 - SPACER EXPANDER

4. No. 2 Intermediate piston ring.
5. No. 1 Upper piston ring.

(1) Install oil ring expander (Fig. 65).

(2) Install upper side rail first and then the lower side rail. Install the side rails by placing one end between the piston ring groove and the oil ring expander. Hold end firmly and press down the portion to be installed until side rail is in position. **Do not use a piston ring expander (Fig. 66).**

(3) Install No. 2 piston ring and then No. 1 piston ring (Fig. 65).

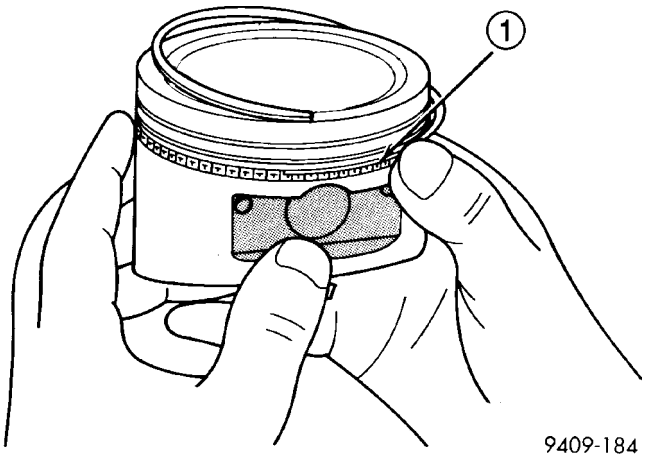

Fig. 66 Installing Side Rail

1 - SIDE RAIL END

(4) Position piston ring end gaps as shown in (Fig. 67).

(5) Position oil ring expander gap at least 45° from the side rail gaps but **not** on the piston pin center or on the thrust direction. Staggering ring gap is important for oil control.

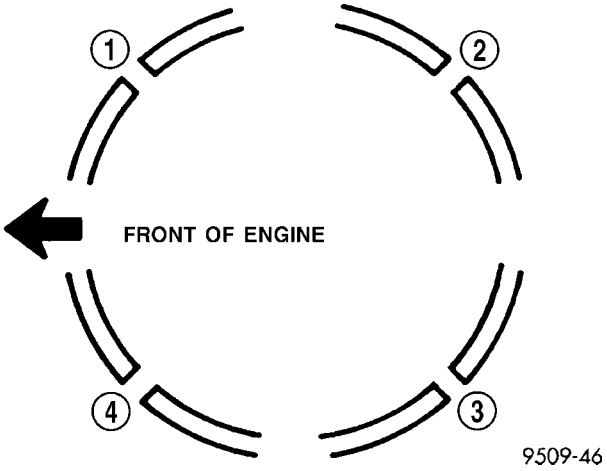

Fig. 67 Piston Ring End Gap Position

1 - GAP OF LOWER SIDE RAIL
2 - NO. 1 RING GAP
3 - GAP OF UPPER SIDE RAIL
4 - NO. 2 RING GAP AND SPACER EXPANDER GAP

VIBRATION DAMPER

REMOVAL

(1) Disconnect negative battery cable.

(2) Support engine under oil pan with wooden block and floor jack.

(3) Remove three right side engine mount vertical bolts to front engine bracket.

(4) Raise vehicle on hoist.

(5) Remove right front wheel and belt splash shield.

VIBRATION DAMPER (Continued)

(6) Support engine under oil pan with a wooden block and screw jack (Fig. 68).

(7) Remove front and rear engine mount through bolts.

(8) Slowly lower engine down with screw jack.

(9) Remove accessory drive belts (Refer to 7 - COOLING/ACCESSORY DRIVE/DRIVE BELTS - REMOVAL).

(10) Remove crankshaft damper bolt.

(11) Remove damper using Special Tool 8454 Puller and Insert 6827–A (Fig. 69).

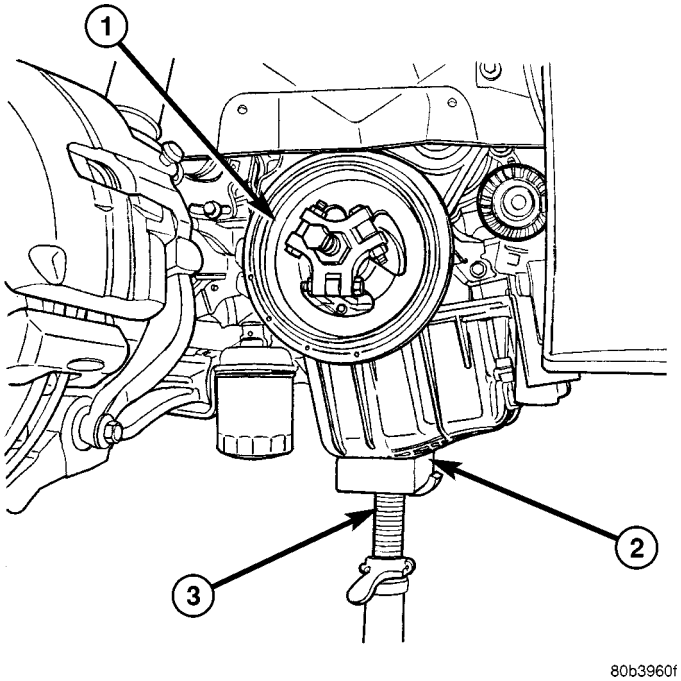

Fig. 68 Vibration Damper - Removal

1 - VIBRATION DAMPER
2 - WOODEN BLOCK
3 - SCREW JACK

INSTALLATION

(1) Install crankshaft vibration damper using M12 1.75 x 150 mm bolt, washer, thrust bearing and nut from Special Tool 6792 (Fig. 70).

(2) Install crankshaft vibration damper bolt and tighten to 136 N·m (100 ft. lbs.).

(3) Install accessory drive belts (Refer to 7 - COOLING/ACCESSORY DRIVE/DRIVE BELTS - INSTALLATION).

(4) Raise engine with screw jack enough to install front and rear engine mount through bolts. Torque fasteners to 61 N·m (45 ft. lbs.).

(5) Install belt splash shield and right front wheel.

(6) Lower vehicle.

(7) Support engine under oil pan with wooden block and floor jack.

(8) Slowly raise engine with floor jack until engine mount bracket aligns with right side engine mount.

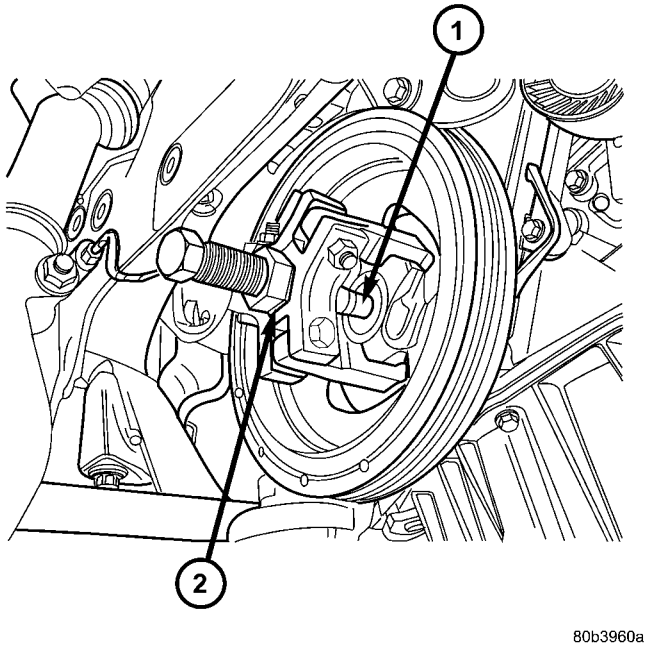

Fig. 69 Vibration Damper - Removal

1 - SPECIAL TOOL 6827-A INSERT
2 - SPECIAL TOOL 8454 PULLER

Install three vertical bolts to front engine bracket. Torque fasteners to 61 N·m (45 ft. lbs.).

(9) Remove floor jack.

(10) Connect negative battery cable.

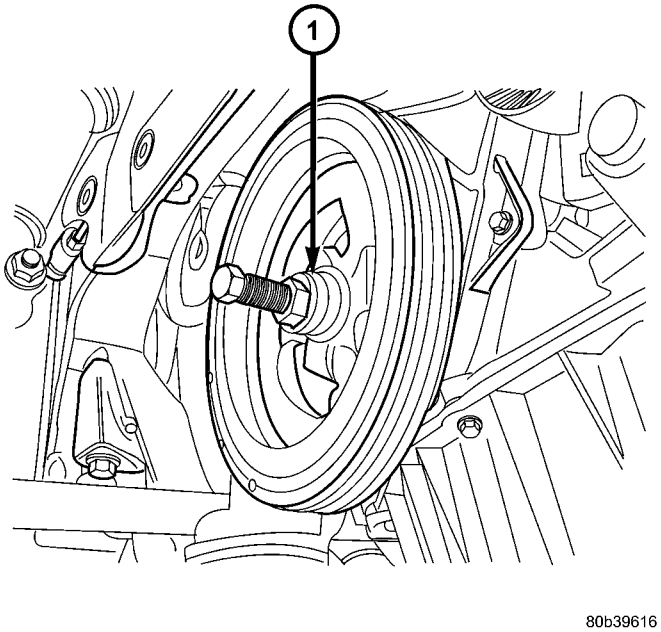

Fig. 70 Vibration Damper - Installation

1 - M12–1.75 × 150 MM BOLT, WASHER AND THRUST BEARING FROM SPECIAL TOOL 6792

STRUCTURAL COLLAR

REMOVAL

(1) Raise vehicle on hoist.

(2) Remove front engine mount through bolt.

(3) Remove bolts attaching torque reaction bracket to engine and transaxle (Fig. 71). Remove torque reaction bracket.

(4) Remove bolts attaching structural collar to oil pan and transaxle (Fig. 71). Remove structural collar.

INSTALLATION

CAUTION: Torque procedure for structural collar and torque reaction bracket must be followed or damage could occur to oil pan, collar, and/or bracket.

(1) Perform the following steps for installing structural collar and torque reaction bracket. Refer to (Fig. 71):

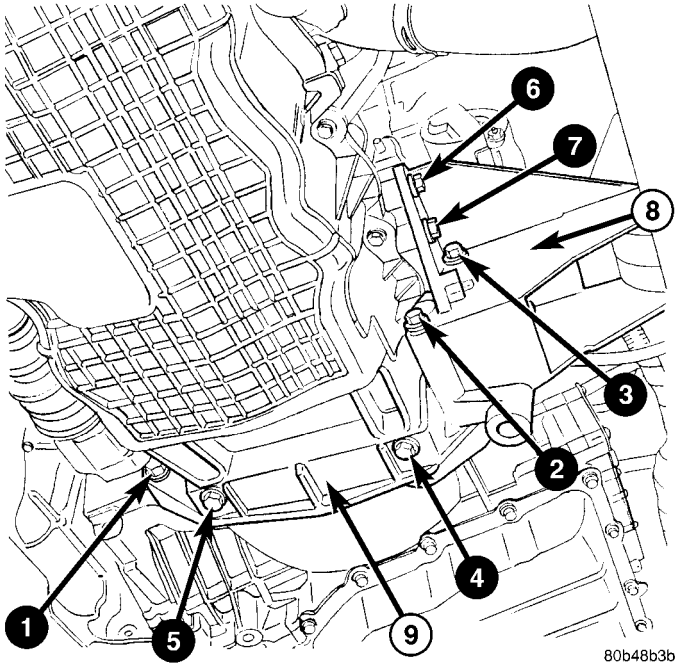

Fig. 71 Structural Collar and Torque Reaction Bracket

1-7 - BOLT TIGHTENING SEQUENCE
8 - TORQUE REACTION BRACKET
9 - STRUCTURAL COLLAR

- Step 1: Place collar into position between transaxle and oil pan. Install collar to transaxle bolt (1), **hand tight only**.
- Step 2: Install collar to oil pan bolts (4) and (5), **hand tight only**.
- Step 3: Position torque reaction bracket in place. Install attaching bolts (2) and (3), **hand tight only**.
- Step 4: Final torque bolts (1-3) to 101 N·m (75 ft. lbs.).
- Step 5: Install bolts (6) and (7) through torque reduction bracket into engine block, **hand tight only**.
- Step 6: Final torque bolts (4) and (5) to 45 N·m (35 ft. lbs.).
- Step 7: Final torque bolts (6) and (7) to 61 N·m (45 ft. lbs.).

(2) Install front engine mount through bolt and torque to 61 N·m (45 ft. lbs.).

(3) Lower vehicle.

ENGINE MOUNTING

ADJUSTMENTS

ENGINE SUPPORT ADJUSTMENT

The right and left support assemblies are slotted to allow for right/left drive train adjustment in relation to drive shaft assembly length.

Check and reposition right and left engine support assemblies as required. Adjust drive train position, if required, for the following conditions:

- Drive shaft distress: See Group 2, Suspension and Driveshaft.
- Any front end structural damage (after repair).
- Support Assembly replacement.

ENGINE SUPPORT ADJUSTMENT

(1) Remove the load on the engine motor mounts by carefully supporting the engine and transmission assembly with a floor jack.

(2) Loosen the right engine support assembly vertical fasteners.

(3) Loosen the left engine support assembly vertical bolts.

(4) Pry the engine right or left as required to achieve the proper drive shaft assembly length. Refer to Group 2, Suspension and Driveshaft for driveshaft identification and related assembly length measuring.

(5) Tighten right engine support assembly vertical bolts to 61 N·m (45 ft. lbs.). and tighten left engine support assembly bolts to 61 N·m (45 ft. lbs.).

(6) Recheck drive shaft length.

LEFT MOUNT

REMOVAL

(1) Disconnect negative battery cable.

(2) Remove throttle body air inlet hose and air cleaner housing assembly.

(3) Remove two nuts securing speed control servo bracket to left shock tower. Reposition servo.

(4) Support transmission with floor jack and wooden block.

(5) Remove the three vertical bolts from mount to transmission bracket (A) (Fig. 72).

(6) Slightly lower transmission with floor jack.

(7) Remove mount to frame rail fasteners (B) and remove mount (Fig. 72).

INSTALLATION

(1) Position mount to frame rail. Install mount to frame rail fasteners (B) (Fig. 72). Torque fasteners to 33 N·m (24 ft. lbs.).

(2) Raise transmission into position with floor jack.

(3) Install three vertical bolts from mount to transmission bracket (A) (Fig. 72). Torque fasteners to 61 N·m (45 ft. lbs.).

(4) Remove floor jack and wooden block.

(5) Install speed control servo to left shock tower. Torque fasteners to 6.7 N·m (60 in. lbs.)

(6) Install throttle body air inlet hose and air cleaner housing assembly.

(7) Connect negative battery cable.

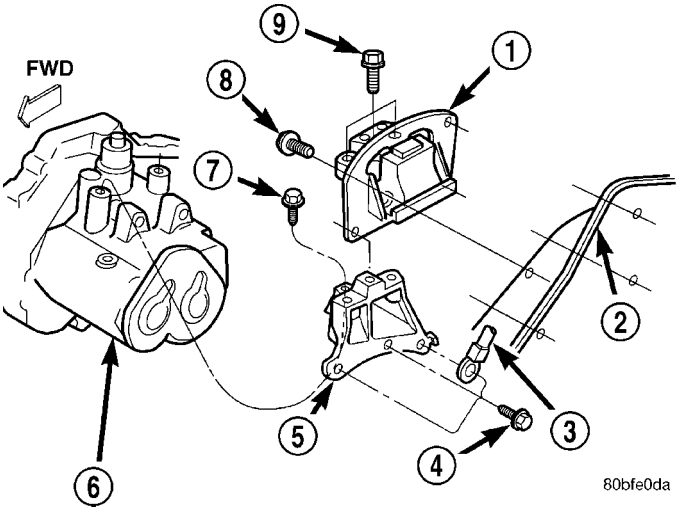

Fig. 72 Left Side Mount - Typical

1 - TRANSMISSION SUPPORT ASSEMBLY
2 - LEFT FRAME RAIL
3 - GROUND CABLE
4 - BOLT (D)
5 - TRANSMISSION BRACKET
6 - TRANSMISSION
7 - BOLT (C)
8 - BOLT (B)
9 - BOLT (A)

REAR MOUNT

REMOVAL

(1) Remove throttle body air inlet hose and air cleaner housing assembly.

(2) Remove three vertical bolts attaching rear mount bracket to transaxle case (Fig. 73).

(3) Raise vehicle on hoist.

(4) Remove rear mount bracket through bolt (Fig. 73).

(5) Remove horizontal bolt attaching rear mount bracket to transaxle case (Fig. 73).

(6) Remove mount bracket.

(7) Remove rear mount to suspension crossmember attaching bolts.

(8) Remove rear mount.

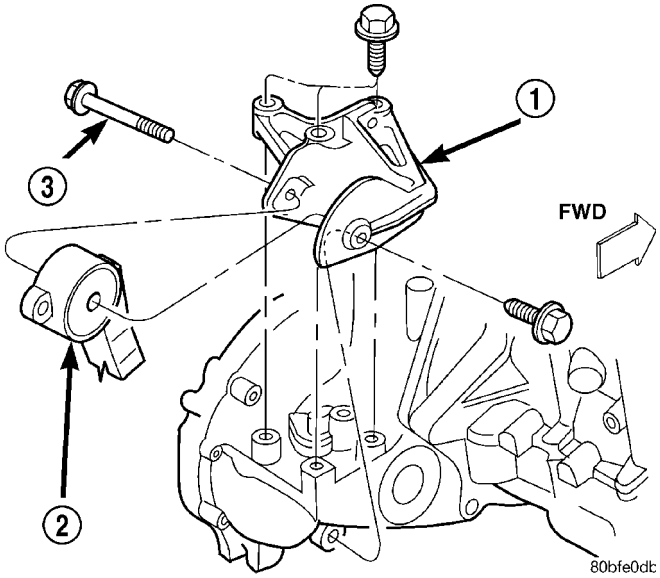

Fig. 73 Engine Mounting—Rear

1 - REAR TORQUE BRACKET
2 - REAR MOUNT
3 - THROUGH BOLT

INSTALLATION

(1) Position rear mount on suspension crossmember and loosely install bolts.

(2) Position mount bracket on transaxle and install bolts. Tighten to 110 N·m (80 ft. lbs.) (Fig. 73).

(3) Install rear mount to bracket through bolt and tighten to 61 N·m (45 ft. lbs.) (Fig. 73).

(4) Tighten rear mount to crossmember bolts to 61 N·m (45 ft. lbs.) (Fig. 73).

(5) Lower vehicle. Install throttle body air inlet hose and air cleaner housing assembly.

RIGHT MOUNT

REMOVAL

(1) Remove coolant recovery container (Refer to 7 - COOLING/ENGINE/COOLANT RECOVERY CONTAINER - REMOVAL).

(2) Remove heater tube front attaching screw.

(3) Raise vehicle on a hoist and remove inner splash shield.

(4) Remove heater tube rear attaching screw.

(5) Remove the right engine support assembly vertical fasteners from frame rail (Fig. 74).

(6) Lower vehicle. Remove the load on the engine motor mounts by carefully supporting the engine assembly with floor jack and wooden block on oil pan.

(7) Remove the bolts attaching the engine support assembly to the engine bracket (Fig. 74).

(8) Remove right engine mount.

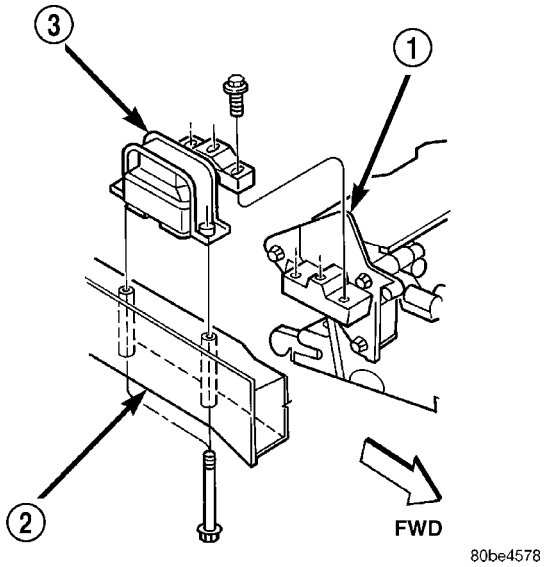

Fig. 74 Engine Mounting—Right Side

1 - ENGINE SUPPORT BRACKET
2 - FRAME RAIL
3 - RIGHT ENGINE MOUNT

INSTALLATION

(1) Position right engine mount and install frame rail to mount bolts. Tighten bolts to 61 N·m (45 ft. lbs.) (Fig. 74).

(2) Install the mount to engine support bracket bolts and tighten to 61 N·m (45 ft. lbs.) (Fig. 74).

(3) Raise vehicle on a hoist.

(4) Install heater tube rear attaching screw.

(5) Install inner splash shield and lower vehicle.

(6) Install heater tube front attaching screw.

(7) Install coolant recovery container (Refer to 7 - COOLING/ENGINE/COOLANT RECOVERY CONTAINER - INSTALLATION).

FRONT MOUNT

REMOVAL

(1) Raise vehicle.

(2) Remove front mount to bracket horizontal through bolt (Fig. 75).

(3) Remove front mount vertical bolts (Fig. 75).

(4) Remove front mount.

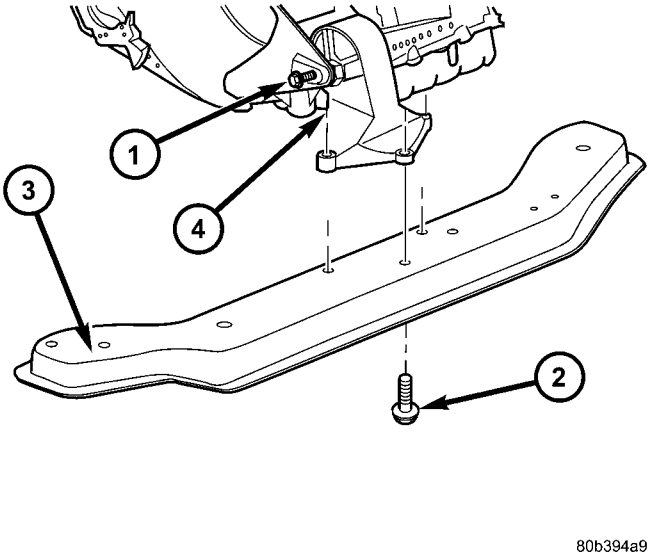

Fig. 75 FRONT ENGINE MOUNT

1 - HORIZONTAL THROUGH BOLT
2 - VERTICAL BOLT(S)
3 - LOWER RADIATOR CROSSMEMBER
4 - FRONT ENGINE MOUNT

INSTALLATION

(1) Position front mount on lower radiator crossmember.

(2) Loose install front mount to bracket through bolt.

(3) Install front mount vertical bolts. Tighten bolts to 61 N·m (45 ft. lbs.) (Fig. 75).

(4) Tighten horizontal through bolt to 61 N·m (45 ft. lbs.) (Fig. 75).

(5) Lower vehicle.

LUBRICATION

DESCRIPTION

NOTE: Some 2.4L engines are not equipped with a oil pan gasket. Use the appropriate RTV sealant.

The lubrication system is a full-flow filtration, pressure feed type. The oil pump (Fig. 76) is mounted in the front engine cover and driven by the crankshaft.

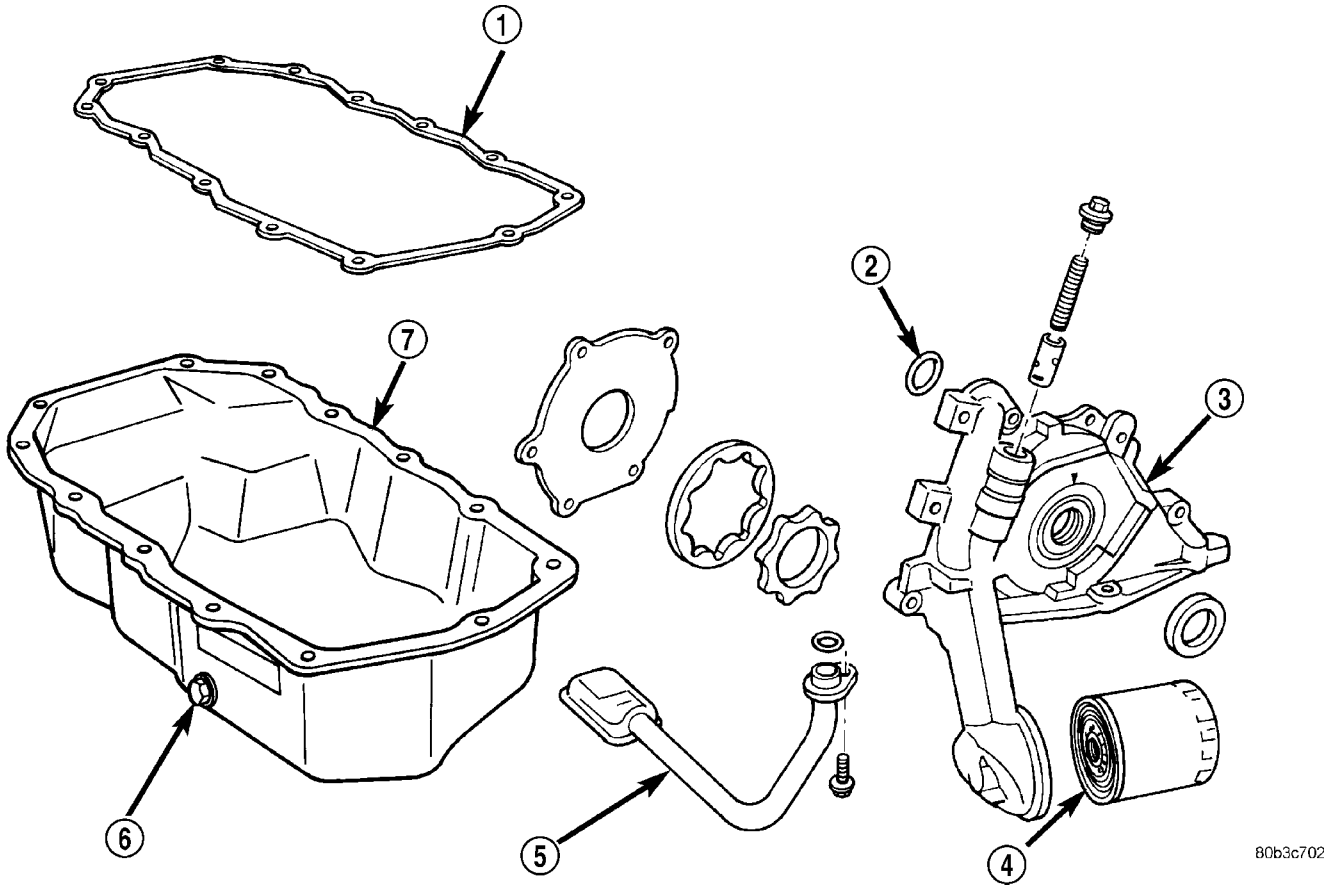

Fig. 76 Lubrication Components - Typical

1 - OIL PAN GASKET
2 - O-RING
3 - OIL PUMP BODY
4 - FILTER
5 - OIL PICK-UP TUBE
6 - DRAIN PLUG
7 - OIL PAN

LUBRICATION (Continued)

OPERATION

Engine oil drawn up through the pickup tube and is pressurized by the oil pump and routed through the full-flow filter to the main oil gallery running the length of the cylinder block. A diagonal hole in each bulkhead feeds oil to each main bearing. Drilled passages within the crankshaft route oil from main bearing journals to connecting rod journals. Balance shaft lubrication is provided through an oil passage from the number one main bearing cap through the balance shaft carrier support leg. This passage directly supplies oil to the front bearings and internal machined passages in the shafts that routes oil from front to the rear shaft bearing journals. A vertical hole at the number five bulkhead routes pressurized oil through a restrictor (integral to the cylinder head gasket) up past a cylinder head bolt to an oil gallery running the length of the cylinder head. The camshaft journals are partially slotted to allow a predetermined amount of pressurized oil to pass into the bearing cap cavities. Lubrication of the camshaft lobes are provided by small holes in the camshaft bearing caps that are directed towards each lobe. Oil returning to the pan from pressurized components supplies lubrication to the valve stems. Cylinder bores and wrist pins are splash lubricated from directed slots on the connecting rod thrust collars (Fig. 77).

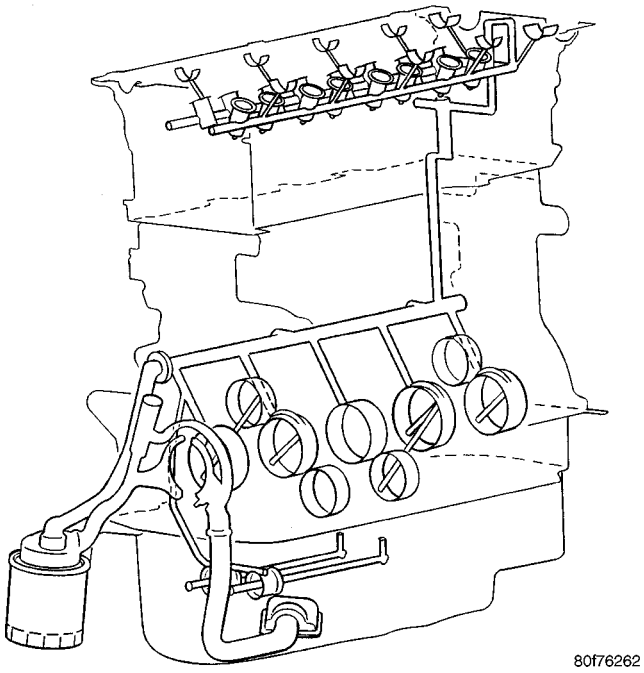

Fig. 77 Engine Lubrication System

DIAGNOSIS AND TESTING - CHECKING ENGINE OIL PRESSURE

(1) Disconnect and remove oil pressure switch. (Refer to 9 - ENGINE/LUBRICATION/OIL PRESSURE SENSOR/SWITCH - REMOVAL)

(2) Install Special Tools C-3292 Gauge with 8406 Adaptor fitting.

(3) Start engine and record oil pressure. Refer to Specifications for correct oil pressure requirements. (Refer to 9 - ENGINE - SPECIFICATIONS)

CAUTION: If oil pressure is 0 at idle, do not perform the 3000 RPM test

(4) If oil pressure is 0 at idle. Shut off engine, check for pressure relief valve stuck open, a clogged oil pick-up screen or a damaged oil pick-up tube O-ring.

(5) After test is complete, remove test gauge and fitting.

(6) Install oil pressure switch and connector. (Refer to 9 - ENGINE/LUBRICATION/OIL PRESSURE SENSOR/SWITCH - INSTALLATION)

OIL

STANDARD PROCEDURE

ENGINE OIL LEVEL CHECK

The best time to check engine oil level is after it has sat overnight, or if the engine has been running, allow the engine to be shut off for at least 5 minutes before checking oil level.

Checking the oil while the vehicle is on level ground will improve the accuracy of the oil level reading. Remove dipstick and observe oil level (Fig. 78). Add oil only when the level is at or below the ADD mark (Fig. 79).

STANDARD PROCEDURE - ENGINE OIL AND FILTER CHANGE

Change engine oil at mileage and time intervals described in the Maintenance Schedule. (Refer to LUBRICATION & MAINTENANCE/MAINTENANCE SCHEDULES - DESCRIPTION)

OIL (Continued)

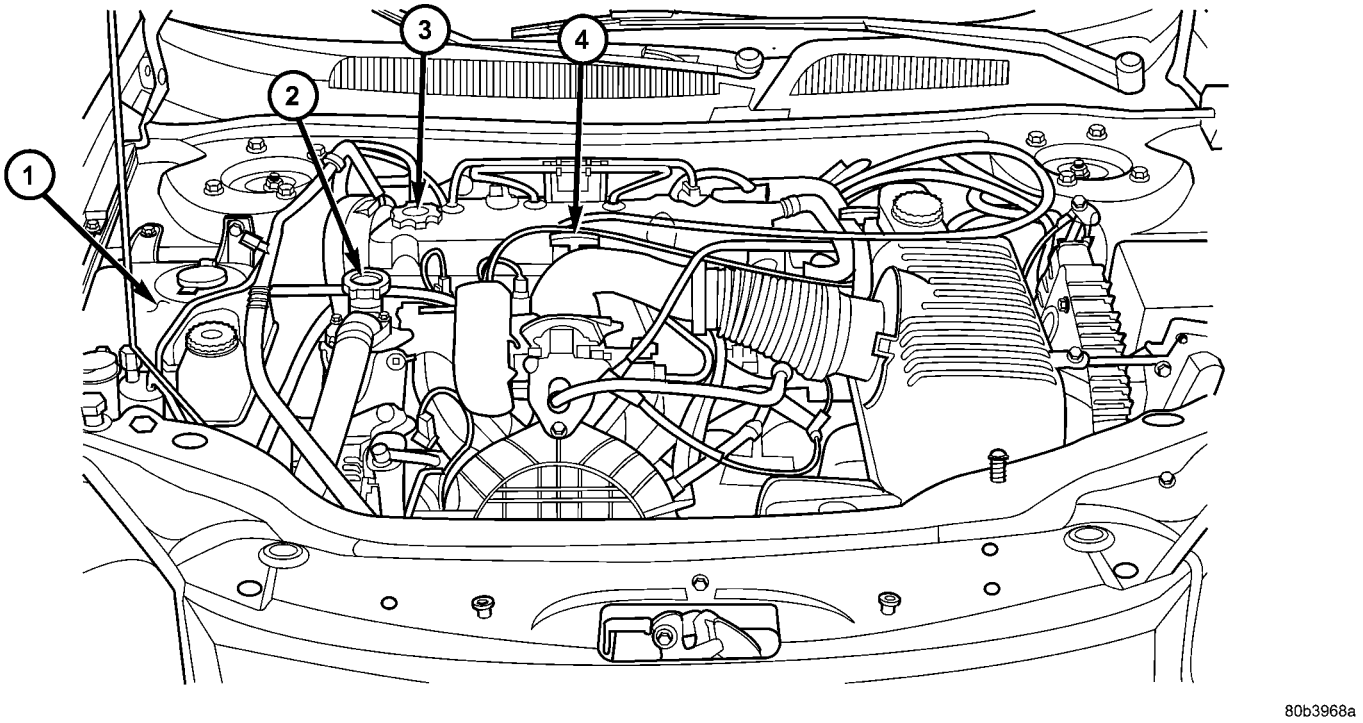

Fig. 78 Fluid Level Check - 2.0/2.4L

1 - COOLANT RECOVERY CONTAINER
2 - COOLANT PRESSURE CAP
3 - ENGINE OIL FILL
4 - ENGINE OIL DIPSTICK

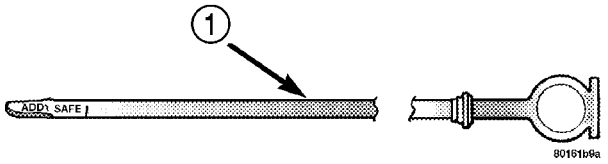

Fig. 79 Oil Level

1 - ENGINE OIL LEVEL DIPSTICK

WARNING: NEW OR USED ENGINE OIL CAN BE IRRITATING TO THE SKIN. AVOID PROLONGED OR REPEATED SKIN CONTACT WITH ENGINE OIL. CONTAMINANTS IN USED ENGINE OIL, CAUSED BY INTERNAL COMBUSTION, CAN BE HAZARDOUS TO YOUR HEALTH. THOROUGHLY WASH EXPOSED SKIN WITH SOAP AND WATER. DO NOT WASH SKIN WITH GASOLINE, DIESEL FUEL, THINNER, OR SOLVENTS, HEALTH PROBLEMS CAN RESULT. DO NOT POLLUTE, DISPOSE OF USED ENGINE OIL PROPERLY. CONTACT YOUR DEALER OR GOVERNMENT AGENCY FOR LOCATION OF COLLECTION CENTER IN YOUR AREA.

Run engine until achieving normal operating temperature.

(1) Position the vehicle on a level surface and turn engine off.

(2) Remove oil fill cap.

(3) Raise vehicle on hoist.

(4) Place a suitable drain pan under crankcase drain.

(5) Remove drain plug from crankcase and allow oil to drain into pan. Inspect drain plug threads for stretching or other damage. Replace drain plug and gasket if damaged.

(6) Remove oil filter. (Refer to 9 - ENGINE/LUBRICATION/OIL FILTER - REMOVAL)

(7) Install and tighten drain plug in crankcase.

(8) Install new oil filter. (Refer to 9 - ENGINE/LUBRICATION/OIL FILTER - INSTALLATION)

(9) Lower vehicle and fill crankcase with specified type and amount of engine oil. (Refer to LUBRICATION & MAINTENANCE/FLUID TYPES - DESCRIPTION)

(10) Install oil fill cap.

(11) Start engine and inspect for leaks.

(12) Stop engine and inspect oil level.

OIL (Continued)

NOTE: Care should be exercised when disposing used engine oil after it has been drained from a vehicle engine. Refer to the WARNING listed above.

OIL FILTER

DESCRIPTION

The engine oil filter (Fig. 80) is a high quality full-flow, disposable type. Replace the oil filter with a Mopar® or the equivalent.

REMOVAL

(1) Raise vehicle on hoist.

(2) Position an oil collecting container under oil filter location.

CAUTION: When servicing the oil filter avoid deforming the filter can by installing the remove/install tool band strap against the can to base lock seam. The lock seam joining the can to the base is reinforced by the base plate.

(3) Using a suitable filter wrench, turn oil filter (Fig. 80) counterclockwise to remove.

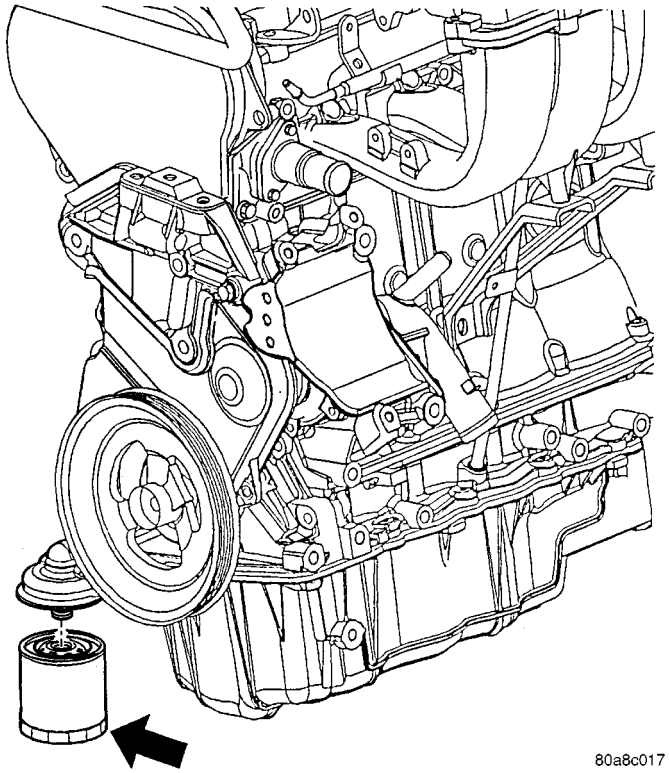

Fig. 80 Oil Filter

INSTALLATION

(1) Clean and check filter mounting surface. The surface must be smooth, flat and free of debris or pieces of gasket.

(2) Lubricate new oil filter gasket with clean engine oil.

(3) Screw oil filter (Fig. 80) on until the gasket contacts base. Tighten to 11 N·m (8 ft. lbs.).

OIL PAN

REMOVAL

(1) Disconnect negative battery cable.

(2) Raise vehicle on hoist and drain engine oil.

(3) Remove structural collar and torque reaction bracket (Refer to 9 - ENGINE/ENGINE BLOCK/ STRUCTURAL COVER - REMOVAL).

(4) Remove bolts attaching oil pan.

(5) Remove oil pan.

(6) Clean oil pan and all gasket surfaces.

INSTALLATION

(1) Apply Mopar® Engine RTV GEN II at the oil pump to engine block parting line (Fig. 81).

(2) Install the oil pan gasket to the block (Fig. 82).

(3) Install pan and tighten the screws to 12 N·m (105 in. lbs.).

(4) Install structural collar and torque reaction bracket (Refer to 9 - ENGINE/ENGINE BLOCK/ STRUCTURAL COVER - INSTALLATION).

(5) Lower vehicle and fill engine crankcase with proper oil to correct level.

(6) Connect negative battery cable.

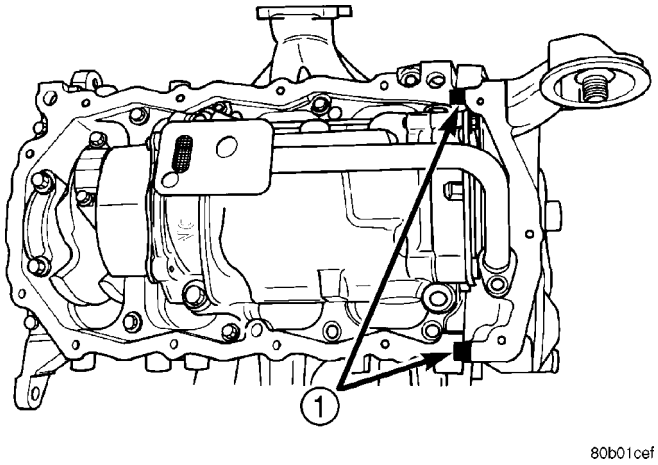

Fig. 81 Oil Pan Sealing

1 - PLACE A 3 MM (1/8 INCH.) BEAD OF SEALANT AT THE PARTING LINE OF THE OIL PUMP BODY TO ENGINE BLOCK

OIL PAN (Continued)

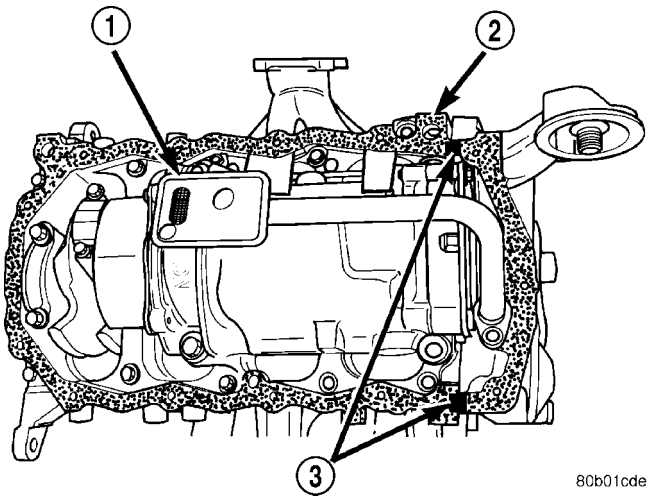

Fig. 82 Oil Pan Gasket Installation

1 - OIL PICK-UP TUBE
2 - OIL PAN GASKET
3 - SEALER

OIL PRESSURE SENSOR/ SWITCH

REMOVAL

(1) Raise vehicle.

(2) Position oil collecting container under pressure switch location.

(3) Disconnect oil pressure switch electrical connector and remove switch (Fig. 83).

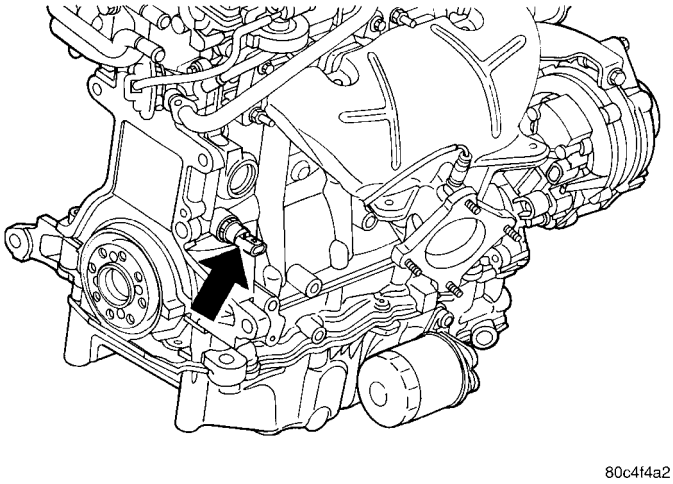

Fig. 83 Engine Oil Pressure Switch

INSTALLATION

(1) Install oil pressure switch and connect electrical connector (Fig. 83).

(2) Lower vehicle.

(3) Start engine and allow to run a minimum of 2 minutes.

(4) Shut engine off and check engine oil level. Adjust level as necessary.

OIL PUMP

REMOVAL

(1) Disconnect negative battery cable.

(2) Remove crankshaft damper (Refer to 9 - ENGINE/ENGINE BLOCK/VIBRATION DAMPER - REMOVAL).

(3) Remove Timing Belt (Refer to 9 - ENGINE/ VALVE TIMING/TIMING BELT/CHAIN AND SPROCKETS - REMOVAL).

(4) Remove Oil Pan (Refer to 9 - ENGINE/LUBRICATION/OIL PAN - REMOVAL).

(5) Remove Crankshaft Sprocket using Special Tool 6793 and insert C-4685-C2 (Fig. 84).

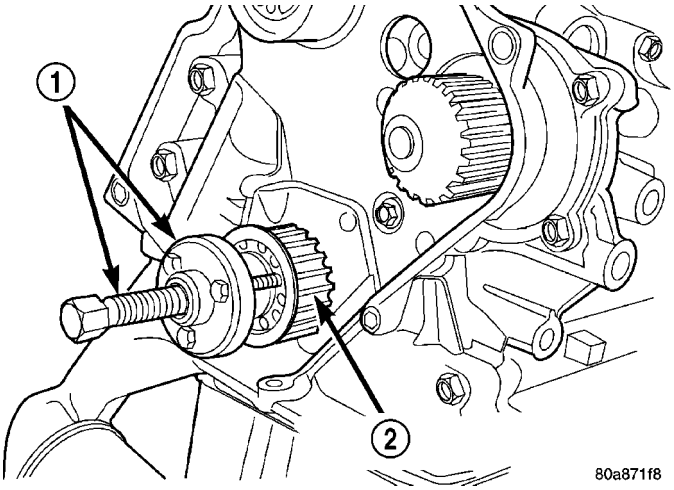

Fig. 84 Crankshaft Sprocket—Removal

1 - SPECIAL TOOL 6793
2 - CRANKSHAFT SPROCKET

(6) Remove oil pick-up tube.

(7) Remove oil pump, (Fig. 85) and front crankshaft seal.

DISASSEMBLY

(1) To remove the relief valve, proceed as follows:

(a) Remove the threaded plug and gasket from the oil pump (Fig. 85).

(b) Remove spring and relief valve (Fig. 85).

(2) Remove oil pump cover screws, and lift off cover.

(3) Remove pump rotors.

(4) Wash all parts in a suitable solvent and inspect carefully for damage or wear.

CLEANING

(1) Clean all parts thoroughly in a suitable solvent.

OIL PUMP (Continued)

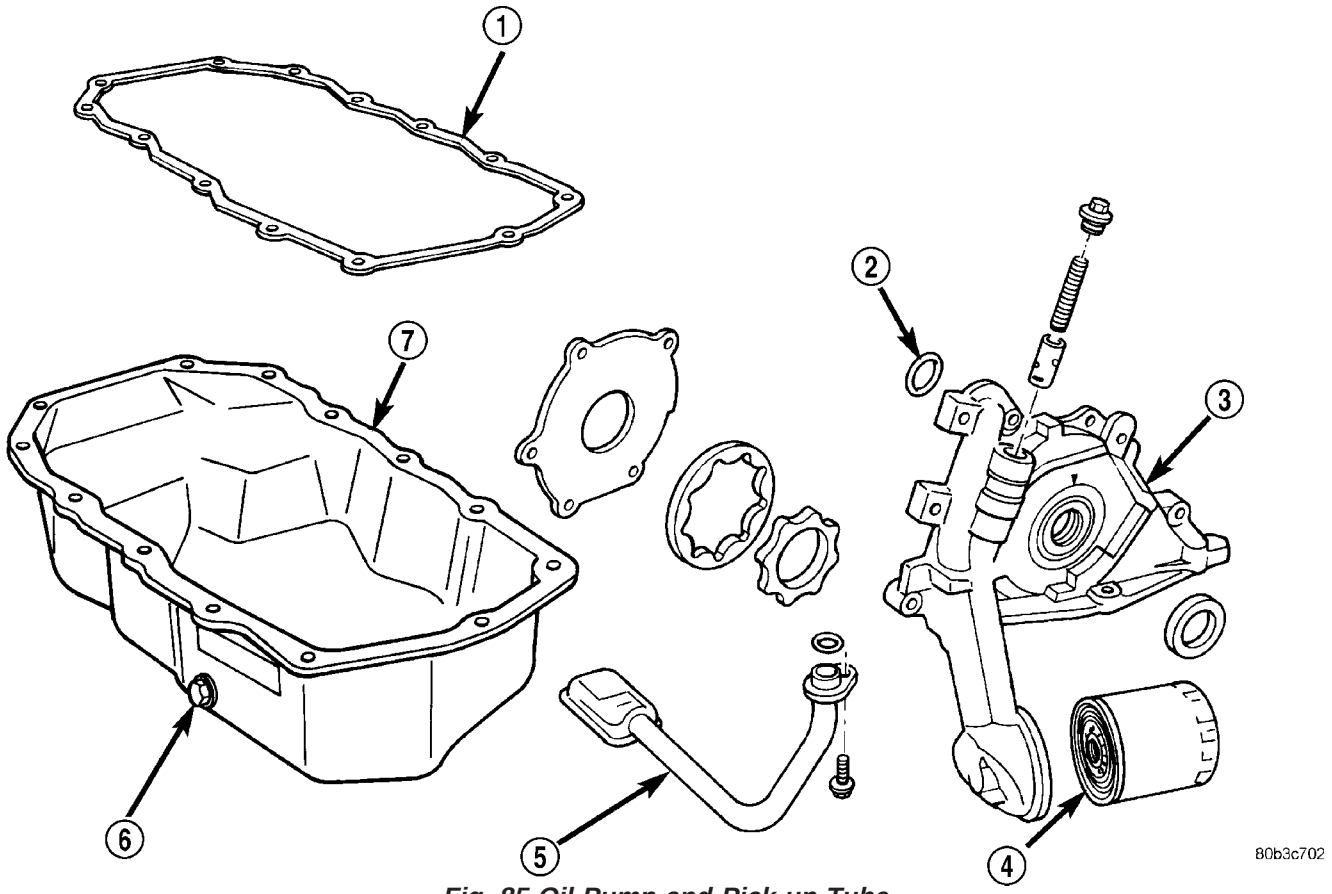

Fig. 85 Oil Pump and Pick-up Tube

1 - OIL PAN GASKET
2 - O-RING
3 - OIL PUMP BODY
4 - FILTER
5 - OIL PICK-UP TUBE
6 - DRAIN PLUG
7 - OIL PAN

INSPECTION

(1) Clean all parts thoroughly. Mating surface of the oil pump should be smooth (Fig. 86). Replace pump cover if scratched or grooved.

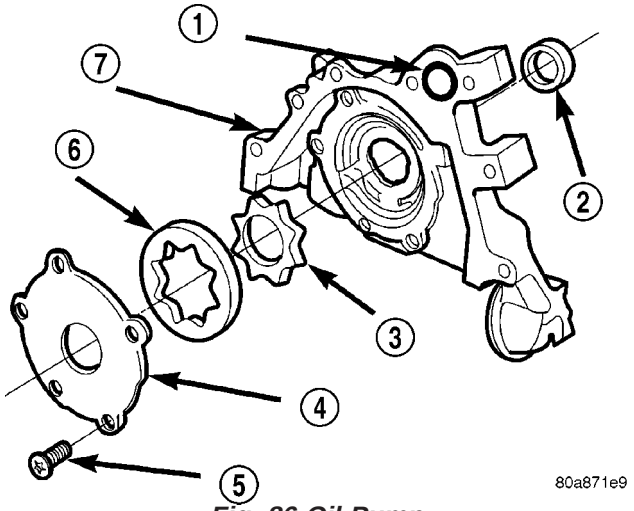

Fig. 86 Oil Pump

1 - O-RING
2 - SEAL
3 - INNER ROTOR
4 - OIL PUMP COVER
5 - FASTENER
6 - OUTER ROTOR
7 - OIL PUMP BODY

OIL PUMP (Continued)

(2) Lay a straightedge across the pump cover surface (Fig. 87). If a 0.025 mm (0.001 in.) feeler gauge can be inserted between cover and straight edge, cover should be replaced.

(3) Measure thickness and diameter of outer rotor. If outer rotor thickness measures 9.40 mm (0.370 in.) or less (Fig. 88), or if the diameter is 79.95 mm (3.148 in.) or less, replace outer rotor.

(4) If inner rotor measures 9.40 mm (0.370 in.) or less replace inner rotor (Fig. 89).

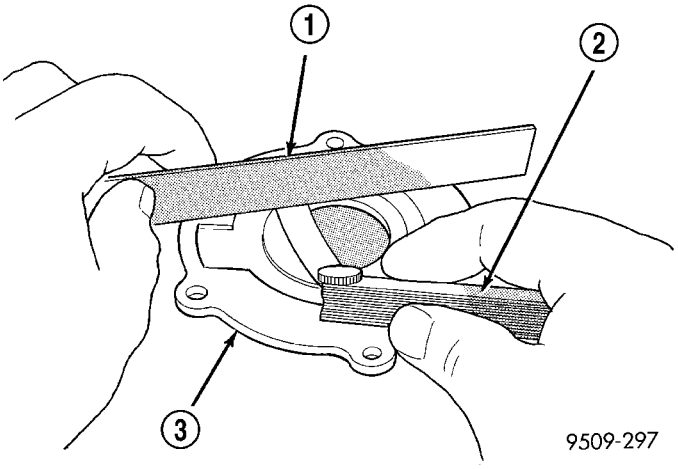

Fig. 87 Checking Oil Pump Cover Flatness

1 - STRAIGHT EDGE
2 - FEELER GAUGE
3 - OIL PUMP COVER

(5) Slide outer rotor into pump housing, press to one side with fingers and measure clearance between rotor and housing (Fig. 90). If measurement is 0.39 mm (0.015 in.) or more, replace housing only if outer rotor is in specification.

(6) Install inner rotor into pump housing. If clearance between inner and outer rotors (Fig. 91) is 0.203 mm (0.008 in.) or more, replace both rotors.

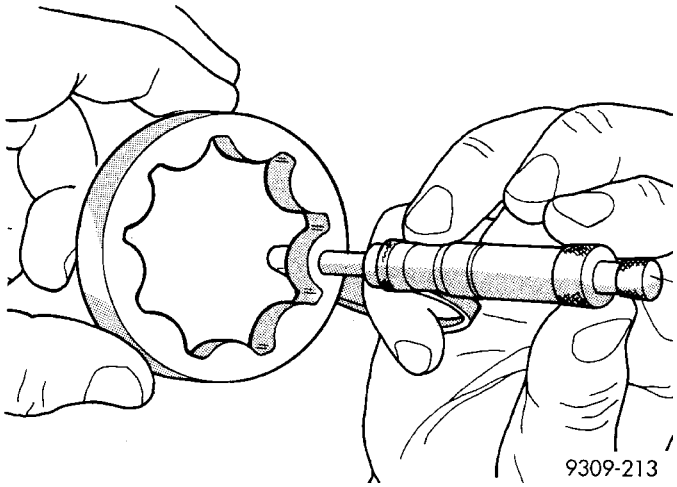

Fig. 88 Measuring Outer Rotor Thickness

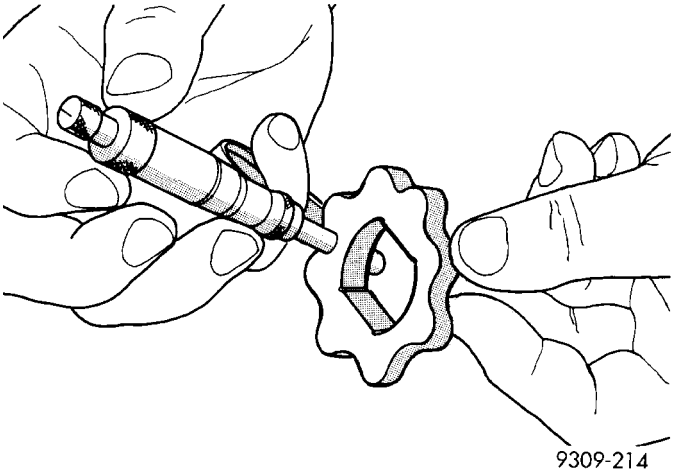

Fig. 89 Measuring

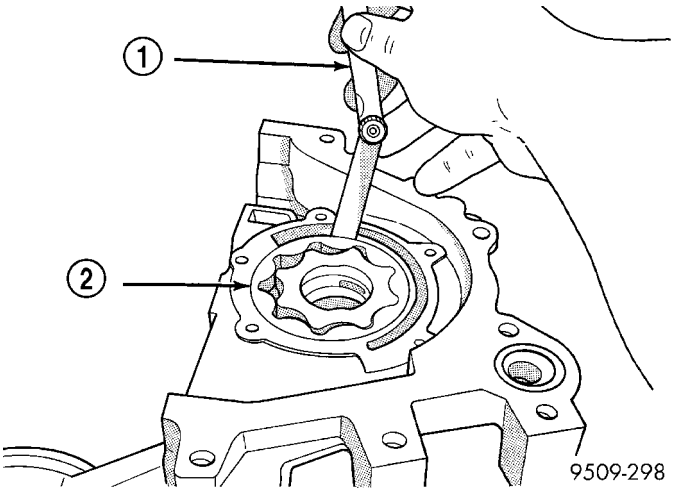

Fig. 90 Measuring Outer Rotor Clearance in Housing

1 - FEELER GAUGE
2 - OUTER ROTOR

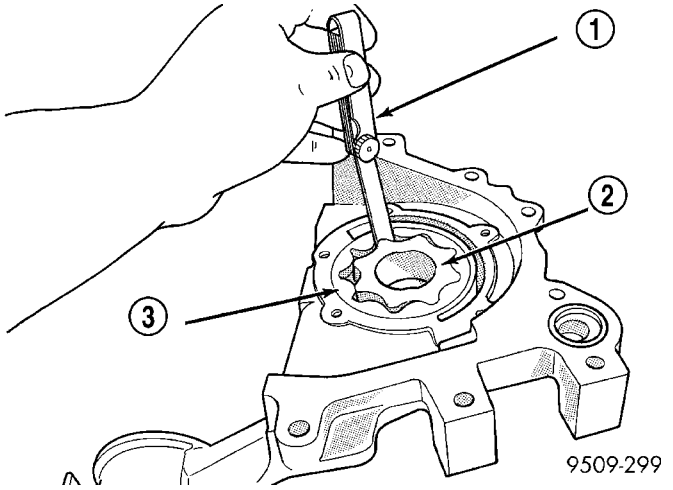

Fig. 91 Measuring Clearance Between Rotors

1 - FEELER GAUGE
2 - INNER ROTOR
3 - OUTER ROTOR

OIL PUMP (Continued)

(7) Place a straightedge across the face of the pump housing, between bolt holes. If a feeler gauge of 0.102 mm (0.004 in.), or more can be inserted between rotors and the straightedge, replace pump assembly (Fig. 92), **ONLY** if rotors are in specifications.

(8) Inspect oil pressure relief valve plunger for scoring and free operation in its bore. Small marks may be removed with 400 grit wet or dry sandpaper.

(9) The relief valve spring has a free length of approximately 60.7 mm (2.39 inches) it should test between 18 and 19 pounds when compressed to 40.5 mm (1.60 inches). Replace spring that fails to meet specifications.

(10) If oil pressure is low and pump is within specifications, inspect for worn engine bearings or other reasons for oil pressure loss.

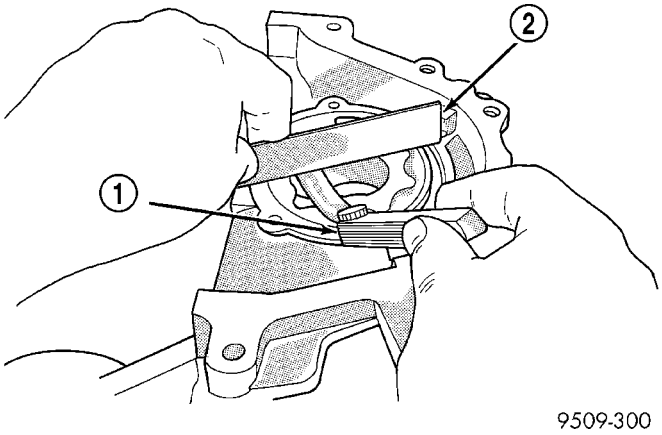

Fig. 92 Measuring Clearance Over Rotors

1 - FEELER GAUGE
2 - STRAIGHT EDGE

ASSEMBLY

(1) Assemble pump, using new parts as required. **Install the inner rotor with chamfer facing the cast iron oil pump cover.**

(2) Prime oil pump before installation by filling rotor cavity with engine oil.

(3) Install cover and tighten screws to 12 N·m (105 in. lbs.).

CAUTION: Oil pump pressure relief valve must be installed as shown in (Fig. 85) or serious damage may occur.

(4) Install relief valve, spring, gasket and cap as shown in (Fig. 85). Tighten cap to 41 N·m (30 ft. lbs.).

INSTALLATION

(1) Make sure all surfaces are clean and free of oil and dirt.

(2) Apply Mopar® Gasket Maker to oil pump as shown in (Fig. 93). Install oil ring into oil pump body discharge passage.

(3) Prime oil pump before installation.

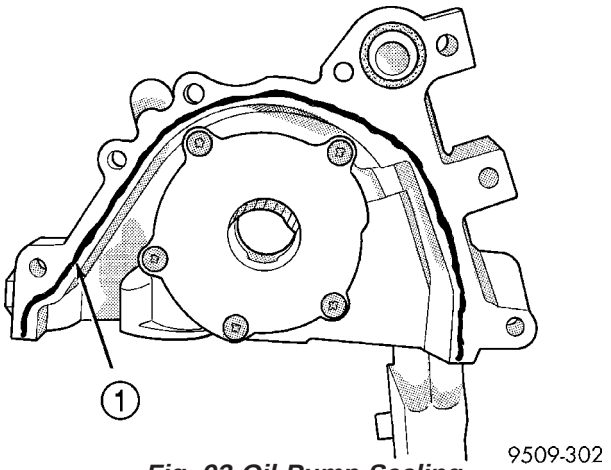

Fig. 93 Oil Pump Sealing

1 - APPLY GASKET MAKER TO OIL PUMP BODY FLANGE

(4) Align oil pump rotor flats with flats on crankshaft as you install the oil pump to the block.

NOTE: Front crankshaft seal MUST be out of pump to align, or damage may result.

(5) Install new front crankshaft seal using Special Tool 6780 (Fig. 94).

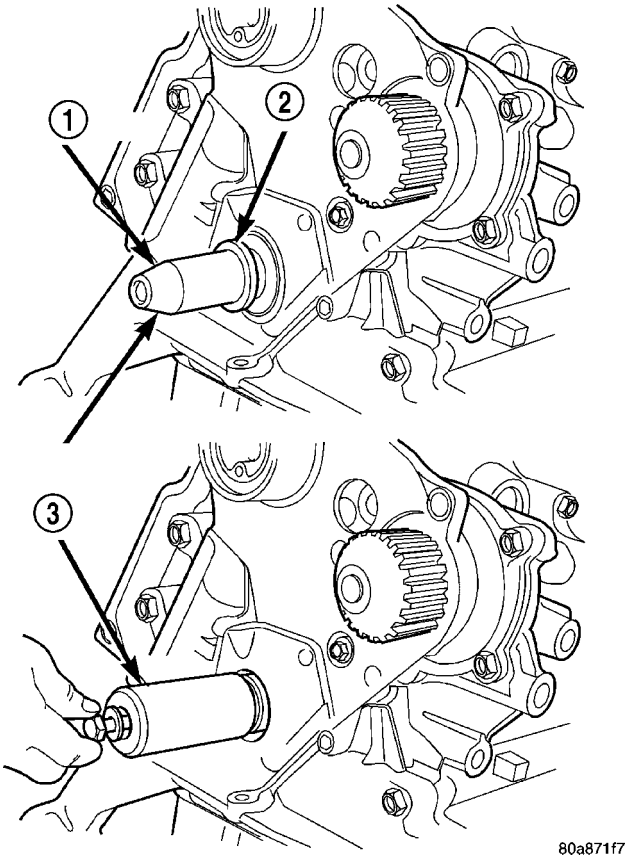

Fig. 94 Front Crankshaft Seal—Installation

1 - PROTECTOR
2 - SEAL
3 - SPECIAL TOOL 6780

OIL PUMP (Continued)

(6) Install crankshaft sprocket using Special Tool 6792 (Fig. 95).

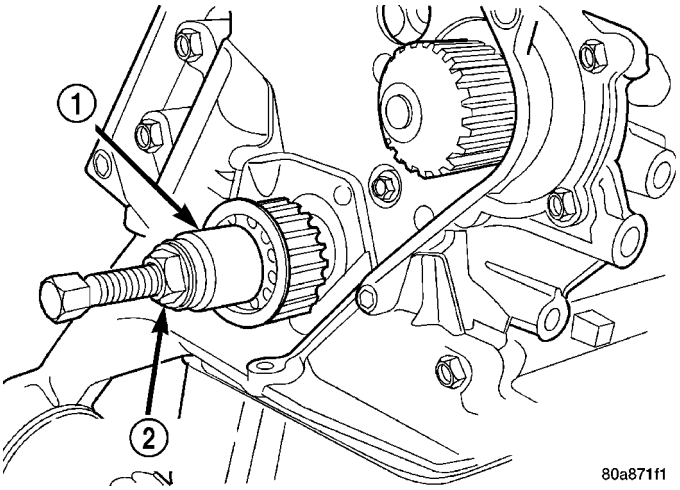

Fig. 95 Crankshaft Sprocket—Installation

1 - SPECIAL TOOL 6792
2 - TIGHTEN NUT TO INSTALL

(7) Install oil pump pick-up tube.

(8) Install oil pan (Refer to 9 - ENGINE/LUBRICATION/OIL PAN - INSTALLATION).

(9) Install Timing Belt (Refer to 9 - ENGINE/VALVE TIMING/TIMING BELT/CHAIN AND SPROCKETS - INSTALLATION).

(10) Install crankshaft damper (Refer to 9 - ENGINE/ENGINE BLOCK/VIBRATION DAMPER - INSTALLATION).

(11) Replace oil filter.

(12) Lower vehicle.

(13) Fill engine crankcase with proper oil to correct level.

(14) Connect negative battery cable.

INTAKE MANIFOLD

DIAGNOSIS AND TESTING - INTAKE MANIFOLD LEAKS

An intake manifold air leak is characterized by lower than normal manifold vacuum. Also, one or more cylinders may not be functioning.

WARNING: USE EXTREME CAUTION WHEN THE ENGINE IS OPERATING. DO NOT STAND IN A DIRECT LINE WITH THE FAN. DO NOT PUT YOUR HANDS NEAR THE PULLEYS, BELTS OR THE FAN. DO NOT WEAR LOOSE CLOTHING.

(1) Start the engine.

(2) Spray a small stream of water (Spray Bottle) at the suspected leak area.

(3) If engine RPM'S change, the area of the suspected leak has been found.

(4) Repair as required.

REMOVAL

WARNING: RELEASE FUEL SYSTEM PRESSURE BEFORE SERVICING SYSTEM COMPONENTS. SERVICE VEHICLES IN WELL VENTILATED AREAS AND AVOID IGNITION SOURCES. NEVER SMOKE WHILE SERVICING THE VEHICLE.

(1) Perform fuel system pressure release procedure **before attempting any repairs.**(Refer to 14 - FUEL SYSTEM/FUEL DELIVERY - STANDARD PROCEDURE).

(2) Disconnect negative battery cable.

(3) Drain cooling system (Refer to 7 - COOLING/ENGINE - STANDARD PROCEDURE).

(4) Remove throttle body air inlet hose and air cleaner housing assembly.

(5) Remove throttle and speed control cables from throttle lever and bracket.

(6) Remove EGR tube.

(7) Remove engine oil dipstick and tube from engine block. Plug hole in block to prevent debris or fluid from entering engine crankcase.

(8) Disconnect necessary vacuum hoses from intake manifold.

(9) Disconnect the fuel supply line quick connect at the fuel rail assembly.

WARNING: WRAP SHOP TOWELS AROUND HOSE TO CATCH ANY GASOLINE SPILLAGE.

(10) Remove fastener holding fuel rail bracket to side of cylinder head.

(11) Disconnect the following electrical connectors:

- Fuel Injectors
- Knock Sensor
- ECT Sensor
- IAC
- TPS
- MAP Sensor
- A/C Pressure Sensor
- A/C Compressor Clutch
- Generator

(12) Reposition wiring harness.

(13) Remove fuel rail support bracket (Fig. 96).

(14) Remove fuel rail.

(15) Remove coolant outlet connector (Refer to 7 - COOLING/ENGINE/COOLANT OUTLET HOUSING - REMOVAL).

(16) Remove intake manifold fasteners. Remove intake manifold.

INTAKE MANIFOLD (Continued)

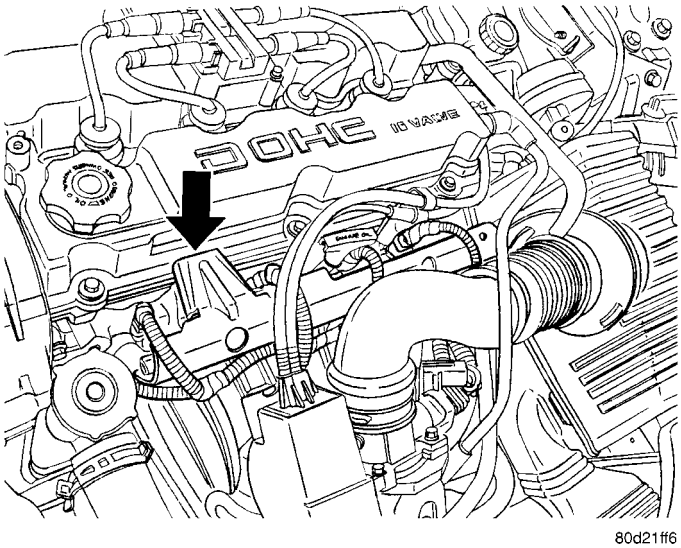

Fig. 96 Fuel Rail Support Bracket

CLEANING

(1) Discard gasket(s).
(2) Clean all sealing surfaces.

INSPECTION

(1) Inspect manifold for cracks or distortion. Replace manifold if necessary.
(2) Inspect manifold for gasket surface damage or warpage. Replace manifold if necessary.

INSTALLATION

(1) Install new intake manifold and gasket. Gradually tighten fasteners to 28 N·m (250 in. lbs.) in sequence shown in (Fig. 97).
(2) Install coolant outlet connector (Refer to 7 - COOLING/ENGINE/COOLANT OUTLET HOUSING - INSTALLATION).
(3) Install fuel rail.
(4) Install fuel rail support bracket (Fig. 96).
(5) Connect previously disconnected electrical connectors.
(6) Install fastener holding fuel rail bracket to side of cylinder head.
(7) Inspect quick connect fittings for damage, replace if necessary. Connect fuel supply hose to fuel rail assembly. Check connection by pulling on connector to insure it locked into position.
(8) Connect vacuum hoses to intake manifold.
(9) Install engine oil dipstick and tube.
(10) Install EGR tube (Refer to 25 - EMISSIONS CONTROL/EXHAUST GAS RECIRCULATION/ TUBE - INSTALLATION).
(11) Install throttle and speed control cables to bracket. Connect cables to the throttle lever.
(12) Fill cooling system (Refer to 7 - COOLING/ ENGINE - STANDARD PROCEDURE).
(13) Connect negative battery cable.
(14) With the DRB scan tool use ASD Fuel System Test to pressurize system to check for leaks.

CAUTION: When using the ASD Fuel System Test, the Auto Shutdown (ASD) relay will remain energized for 7 minutes or until the ignition switch is turned to the OFF position, or Stop All Test is selected.

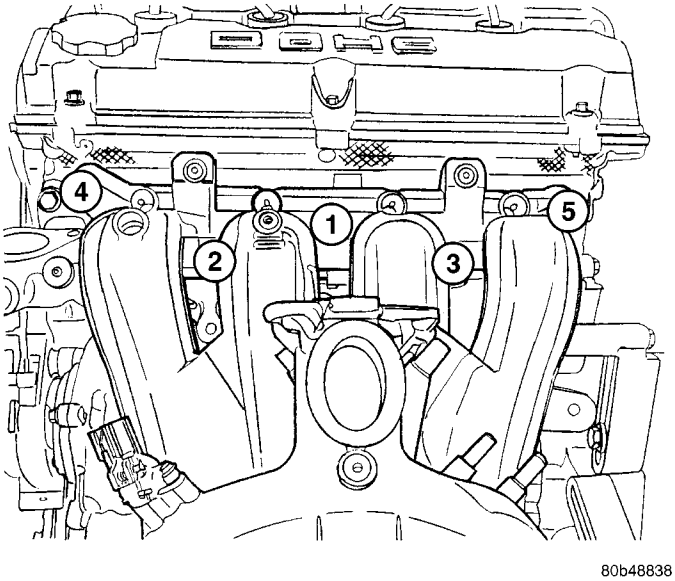

Fig. 97 Intake Manifold Tightening Sequence

EXHAUST MANIFOLD

REMOVAL

(1) Disconnect negative battery cable.
(2) Raise vehicle on hoist.
(3) Remove complete exhaust system (Refer to 11 - EXHAUST SYSTEM - REMOVAL).
(4) Remove rear engine mount and transaxle bracket.
(5) Remove exhaust manifold heat shield (Fig. 98).
(6) Disconnect oxygen sensor electrical connector.
(7) Remove exhaust manifold retaining fasteners and remove exhaust manifold.
(8) Remove and discard manifold gasket.

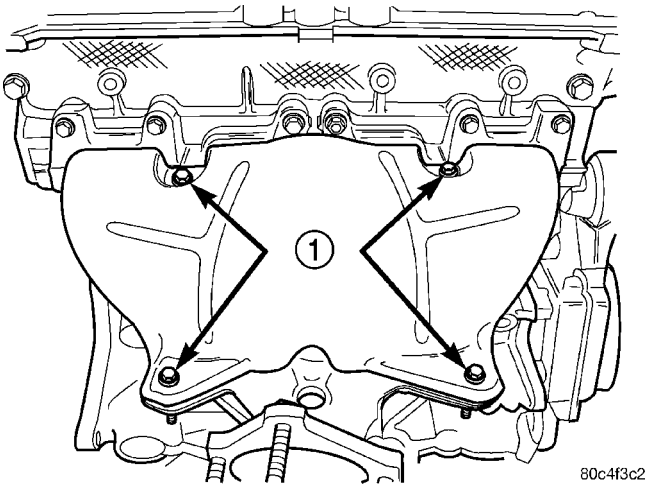

Fig. 98 Exhaust Manifold Heat Shield Bolts

1 - BOLTS

CLEANING

(1) Discard gasket (if equipped) and clean all surfaces of manifold and cylinder head.

INSPECTION

(1) Inspect manifold gasket surfaces for flatness with straight edge. Surface must be flat within 0.15 mm per 300 mm (0.006 in. per foot) of manifold length.
(2) Inspect manifolds for cracks or distortion. Replace manifold as necessary.

INSTALLATION

(1) Install new exhaust manifold gasket. **DO NOT APPLY SEALER**.
(2) Position exhaust manifold in place. Tighten fasteners in sequence shown in (Fig. 99) to 23 N·m (200 in. lbs.). Repeat this procedure until all fasteners are at specified torque.
(3) Install exhaust manifold heat shield.
(4) Connect oxygen sensor electrical connector.

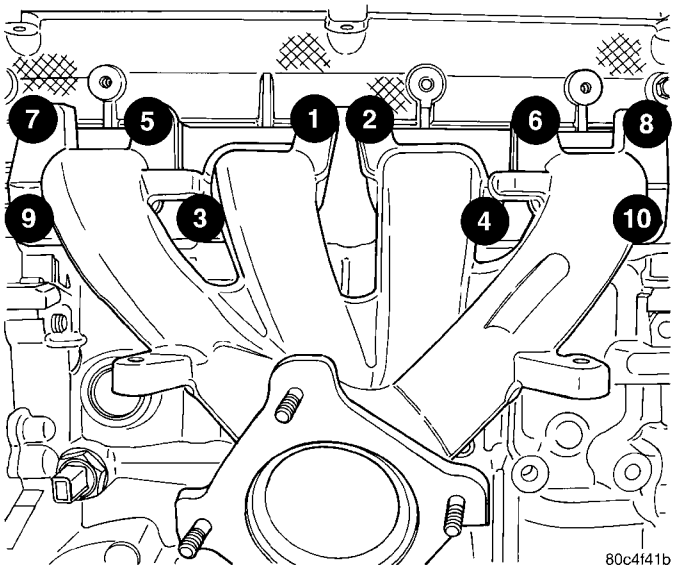

Fig. 99 EXHAUST MANIFOLD TIGHTENING SEQUENCE

(5) Install rear engine mount and transaxle bracket.
(6) Install exhaust system (Refer to 11 - EXHAUST SYSTEM - INSTALLATION). Tighten fasteners to 28 N·m (250 in. lbs.).
(7) Lower vehicle.
(8) Connect negative battery cable.

TIMING BELT COVER(S)

REMOVAL

FRONT COVER - UPPER

(1) Remove upper timing belt cover fasteners (Fig. 100) and remove cover.

FRONT COVER - LOWER

(1) Disconnect negative battery cable.
(2) Raise vehicle on hoist.
(3) Remove right front wheel and belt splash shield.
(4) Remove accessory drive belts (Refer to 7 - COOLING/ACCESSORY DRIVE/DRIVE BELTS - REMOVAL).
(5) Remove crankshaft damper (Refer to 9 - ENGINE/ENGINE BLOCK/VIBRATION DAMPER - REMOVAL).
(6) Remove AC/Generator belt tensioner.
(7) Lower vehicle.
(8) Disconnect generator connectors.
(9) Remove generator and bracket.
(10) Raise vehicle on hoist.
(11) Remove fasteners attaching lower timing cover (Fig. 100).

TIMING BELT COVER(S) (Continued)

(12) Remove lower timing cover.

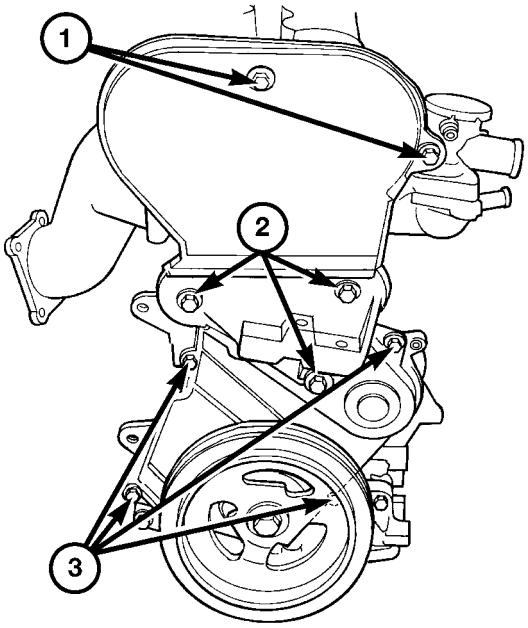

80b47a18

Fig. 100 Front Timing Belt Covers

1 - UPPER TIMING BELT COVER FASTENERS
2 - ENGINE SUPPORT BRACKET FASTENERS
3 - LOWER TIMING BELT COVER FASTENERS

REAR COVER

(1) Remove upper and lower front timing belt covers.

(2) Remove Timing Belt (Refer to 9 - ENGINE/VALVE TIMING/TIMING BELT AND SPROCKETS - REMOVAL).

(3) Remove timing belt idler pulley (Fig. 101).

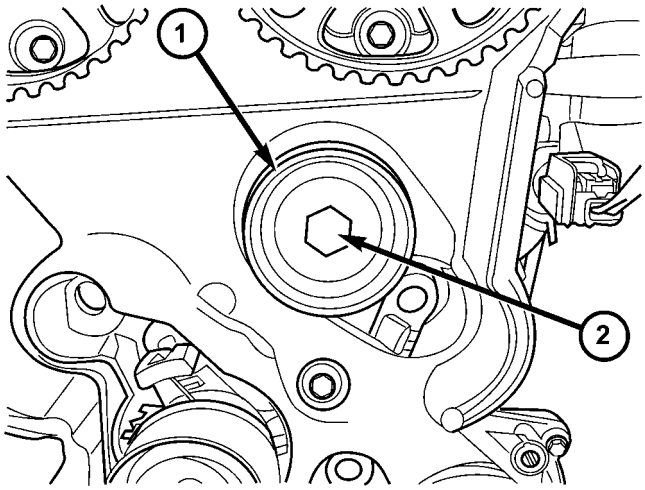

80f116eb

Fig. 101 Timing Belt Idler Pulley

1 - IDLER PULLEY
2 - BOLT

(4) Remove both camshaft sprockets. Hold camshaft sprockets with Special Tool 6847 while removing center bolts (Fig. 102).

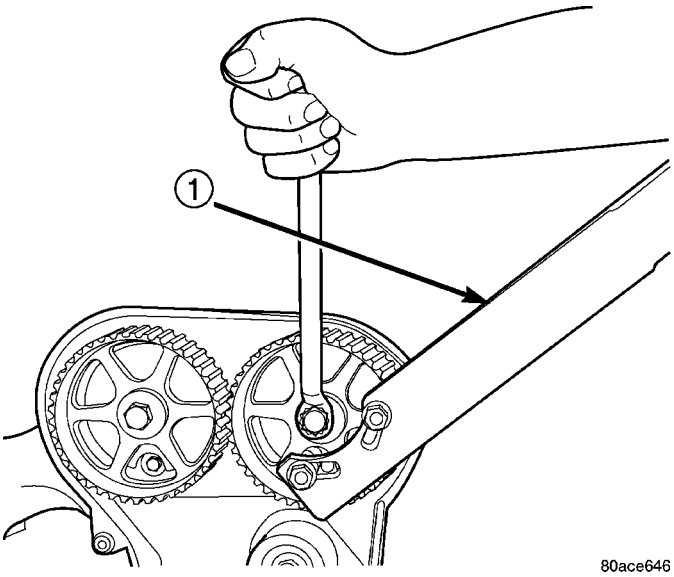

80ace646

Fig. 102 Camshaft Sprocket - Removal/Installation

1 - SPECIAL TOOL 6847

(5) Remove rear timing belt cover fasteners and remove cover from engine (Fig. 103).

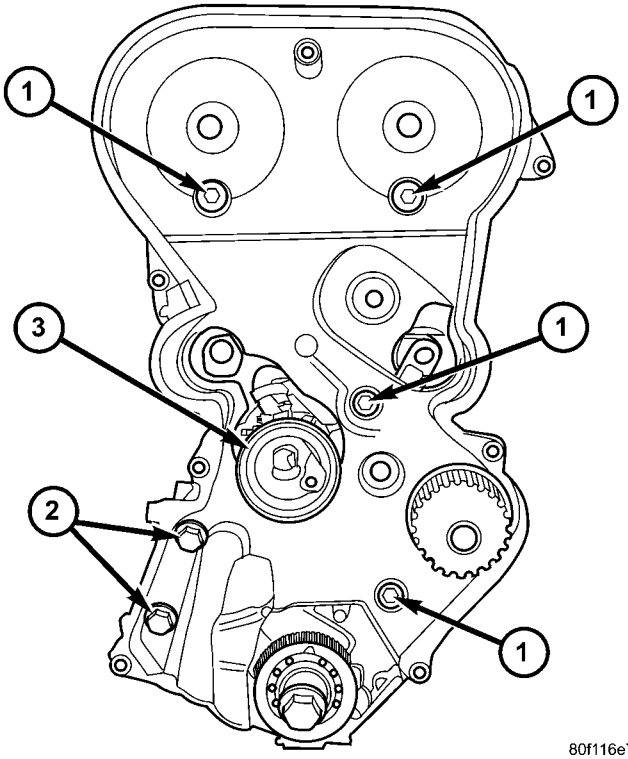

80f116e7

Fig. 103 Rear Timing Belt Cover Fasteners

1 - M6 BOLTS - 12 N·m (105 in. lbs.)
2 - M8 BOLTS - 28 N·m (250 in. lbs.)
3 - TIMING BELT TENSIONER

TIMING BELT COVER(S) (Continued)

INSTALLATION

FRONT COVER - UPPER

(1) Install timing belt cover. Torque fasteners to 6 N·m (50 in. lbs.) (Fig. 100).

FRONT COVER - LOWER

(1) Install lower timing belt cover and torque fasteners to 6 N·m (50 in. lbs.) (Fig. 100).
(2) Lower vehicle.
(3) Install generator and bracket.
(4) Connect generator connectors.
(5) Raise vehicle.
(6) Install AC/Generator belt tensioner.
(7) Install crankshaft damper (Refer to 9 - ENGINE/ENGINE BLOCK/VIBRATION DAMPER - INSTALLATION).
(8) Install accessory drive belts (Refer to 7 - COOLING/ACCESSORY DRIVE/DRIVE BELTS - INSTALLATION).
(9) Install belt splash shield and right front wheel.
(10) Lower vehicle.
(11) Connect negative battery cable.

REAR COVER

(1) Install rear timing belt cover and fasteners. Torque fasteners to specified values (Fig. 103).
(2) Install camshaft sprockets. Hold camshaft sprockets with Special Tool 6847 while tightening center bolts to 115 N·m (85 ft. lbs) (Fig. 102).
(3) Install timing belt idler pulley (Fig. 101).
(4) Install timing belt (Refer to 9 - ENGINE/VALVE TIMING/TIMING BELT AND SPROCKETS - INSTALLATION).
(5) Install upper and lower front timing belt covers.

TIMING BELT AND SPROCKET(S)

REMOVAL

REMOVAL - TIMING BELT

(1) Disconnect negative battery cable.
(2) Raise vehicle on hoist. Remove right front wheel.
(3) Remove belt splash shield.
(4) Remove accessory drive belts (Refer to 7 - COOLING/ACCESSORY DRIVE/DRIVE BELTS - REMOVAL).
(5) Remove crankshaft damper (Refer to 9 - ENGINE/ENGINE BLOCK/VIBRATION DAMPER - REMOVAL).
(6) Remove AC/Generator belt tensioner.
(7) Disconnect generator connections. Remove generator and bracket.
(8) Remove upper and lower timing belt covers (Refer to 9 - ENGINE/VALVE TIMING/TIMING BELT COVER(S) - REMOVAL) (Fig. 100).
(9) Remove coolant recovery container (Refer to 7 - COOLING/ENGINE/COOLANT RECOVERY CONTAINER - REMOVAL).
(10) Remove right engine mount (Refer to 9 - ENGINE/ENGINE MOUNTING/RIGHT MOUNT - REMOVAL).
(11) Remove engine support bracket (Fig. 100).

CAUTION: When aligning crankshaft and camshaft timing marks always rotate engine from crankshaft. Camshaft should not be rotated after timing belt is removed. Damage to valve components may occur. Always align timing marks before removing timing belt.

(12) Before the removal of the timing belt, rotate crankshaft until the TDC mark on oil pump housing aligns with the TDC mark on crankshaft sprocket (trailing edge of sprocket tooth) (Fig. 104).

NOTE: The crankshaft sprocket TDC mark is located on the trailing edge of the sprocket tooth. Failure to align trailing edge of sprocket tooth to TDC mark on oil pump housing will cause the camshaft timing marks to be misaligned.

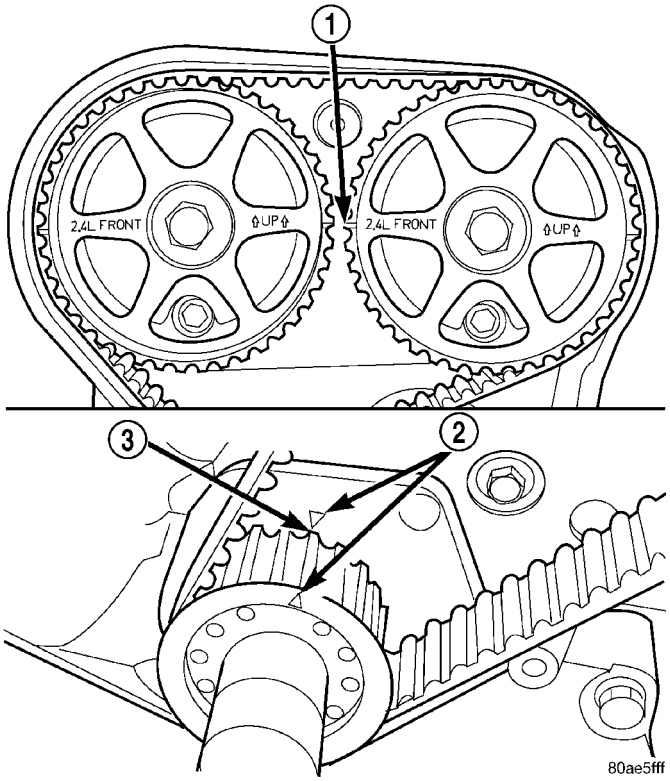

Fig. 104 Crankshaft and Camshaft Timing

1 - CAMSHAFT TIMING MARKS
2 - CRANKSHAFT TDC MARKS
3 - TRAILING EDGE OF SPROCKET TOOTH

TIMING BELT AND SPROCKET(S) (Continued)

(13) Loosen timing belt tensioner lock bolt (Fig. 105).

(14) Insert a 6 mm Allen wrench into the hexagon opening located on the top plate of the belt tensioner pulley (Fig. 105). Rotate the top plate **CLOCKWISE** until there is enough slack in timing belt to allow for removal.

(15) Remove timing belt.

CAUTION: If timing belt was damaged due to incorrect tracking (alignment), the belt tensioner pulley and bracket must be replaced as an assembly (Refer to 9 - ENGINE/VALVE TIMING/TIMING BELT TENSIONER & PULLEY - REMOVAL).

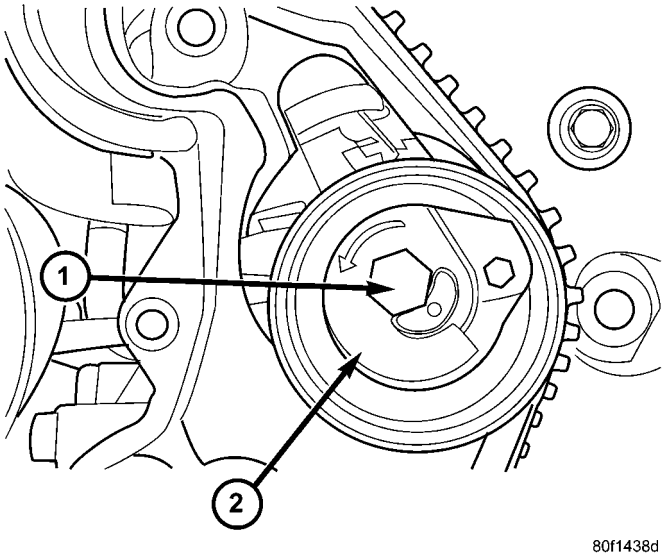

Fig. 105 Timing Belt Tensioner

1 - LOCK BOLT
2 - TOP PLATE

REMOVAL - CAMSHAFT SPROCKETS

(1) Disconnect negative battery cable.

(2) Remove timing belt (Refer to 9 - ENGINE/VALVE TIMING/TIMING BELT AND SPROCKETS - REMOVAL).

(3) Hold camshaft sprockets with Special Tool 6847 while removing center bolts (Fig. 106).

REMOVAL - CRANKSHAFT SPROCKET

(1) Disconnect negative battery cable.

(2) Remove timing belt (Refer to 9 - ENGINE/VALVE TIMING/TIMING BELT AND SPROCKETS - REMOVAL).

(3) Remove crankshaft sprocket using Special Tools 6793 and insert C-4685-C2 (Fig. 107).

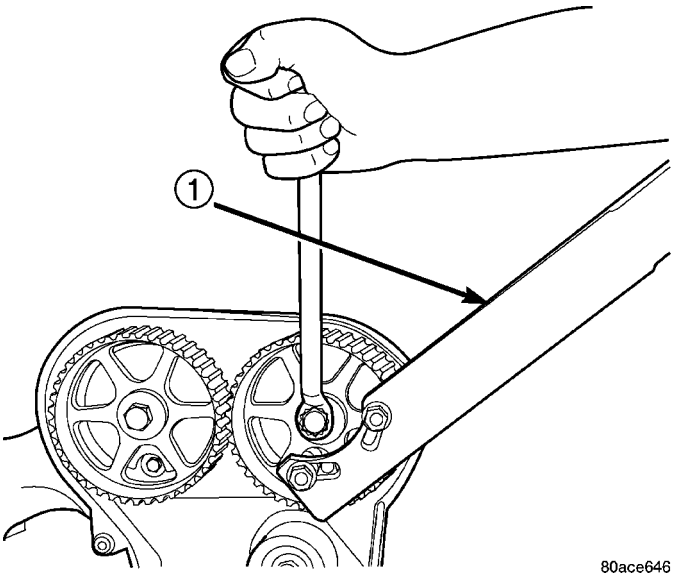

Fig. 106 Camshaft Sprocket - Removal/Installation

1 - SPECIAL TOOL 6847

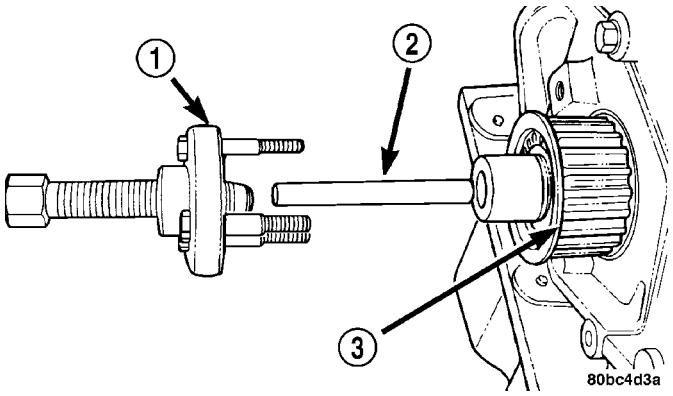

Fig. 107 Crankshaft Sprocket - Removal

1 - SPECIAL TOOL 6793
2 - SPECIAL TOOL C-4685–C2
3 - CRANKSHAFT SPROCKET

CLEANING

Do Not attempt to clean a timing belt. If contamination from oil, grease, or coolants have occurred, the timing belt should be replaced.

Clean all sprockets using a suitable solvent. Clean all sprocket grooves of any debris.

TIMING BELT AND SPROCKET(S) (Continued)

INSTALLATION

INSTALLATION - CRANKSHAFT SPROCKET

CAUTION: The crankshaft sprocket is set to a predetermined depth from the factory for correct timing belt tracking. If removed, use of Special Tool 6792 is required to set the sprocket to original installation depth. An incorrectly installed sprocket will result in timing belt and engine damage.

(1) Install crankshaft sprocket using Special Tool 6792 (Fig. 108).

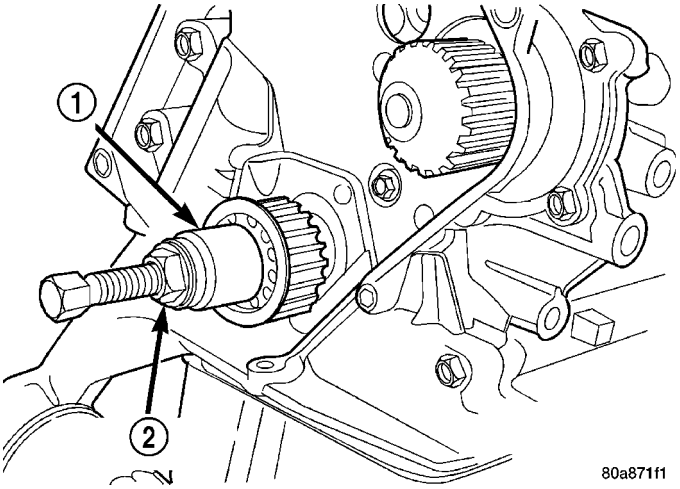

Fig. 108 Crankshaft Sprocket—Installation

1 - SPECIAL TOOL 6792
2 - TIGHTEN NUT TO INSTALL

(2) Install timing belt. (Refer to 9 - ENGINE/VALVE TIMING/TIMING BELT AND SPROCKETS - INSTALLATION).

(3) Connect negative battery cable.

INSTALLATION - CAMSHAFT SPROCKETS

(1) Install camshaft sprockets. Hold camshaft sprockets with Special Tool 6847 while tightening center bolts to 115 N·m (85 ft. lbs.) (Fig. 106).

(2) Install timing belt (Refer to 9 - ENGINE/VALVE TIMING/TIMING BELT AND SPROCKETS - INSTALLATION).

(3) Connect negative battery cable.

INSTALLATION - TIMING BELT

(1) Set crankshaft sprocket to TDC by aligning the sprocket with the arrow on the oil pump housing.

(2) Set camshafts timing marks so that the exhaust camshaft sprocket is a 1/2 notch below the intake camshaft sprocket (Fig. 109).

CAUTION: Ensure that the arrows on both camshaft sprockets are facing up.

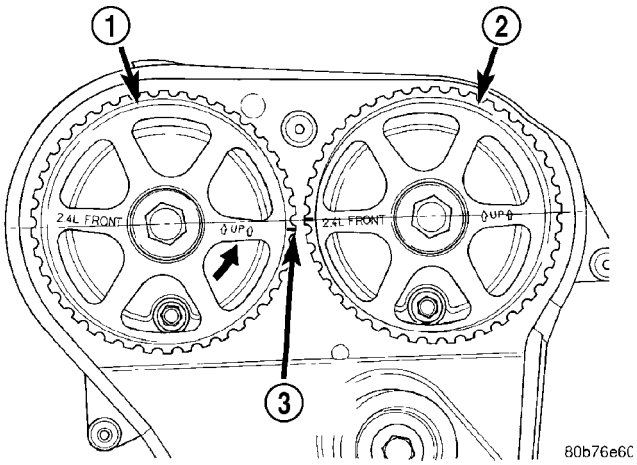

Fig. 109 Camshaft Sprocket Alignment

1 - CAMSHAFT SPROCKET-EXHAUST
2 - CAMSHAFT SPROCKET-INTAKE
3 - 1/2 NOTCH LOCATION

(3) Install timing belt. Starting at the crankshaft, go around the water pump sprocket, idler pulley, camshaft sprockets and then around the tensioner (Fig. 110).

(4) Move the exhaust camshaft sprocket counterclockwise (Fig. 110) to align marks and take up belt slack.

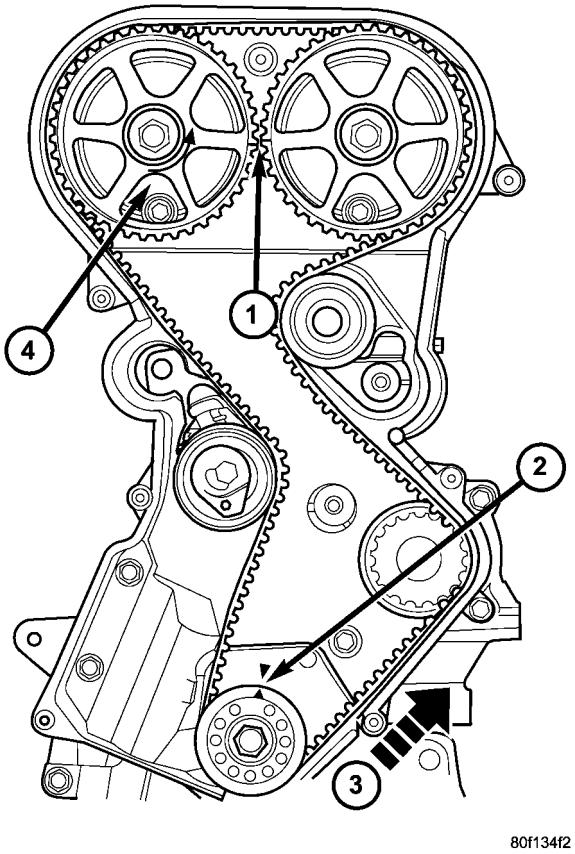

Fig. 110 Timing Belt Installation

1 - CAMSHAFT TIMING MARKS 1/2 NOTCH LOCATION
2 - CRANKSHAFT AT TDC
3 - INSTALL BELT IN THIS DIRECTION
4 - ROTATE CAMSHAFT SPROCKET TO TAKE UP BELT SLACK

TIMING BELT AND SPROCKET(S) (Continued)

(5) Insert a 6 mm Allen wrench into the hexagon opening located on the top plate of the belt tensioner pulley. Rotate the top plate **COUNTERCLOCKWISE**. The tensioner pulley will move against the belt and the tensioner setting notch will eventually start to move clockwise. Watching the movement of the setting notch, continue rotating the top plate counterclockwise until the setting notch is aligned with the spring tang (Fig. 111). Using the allen wrench to prevent the top plate from moving, torque the tensioner lock bolt to 25 N·m (220 in. lbs.). Setting notch and spring tang should remain aligned after lock nut is torqued.

(6) Remove allen wrench and torque wrench.

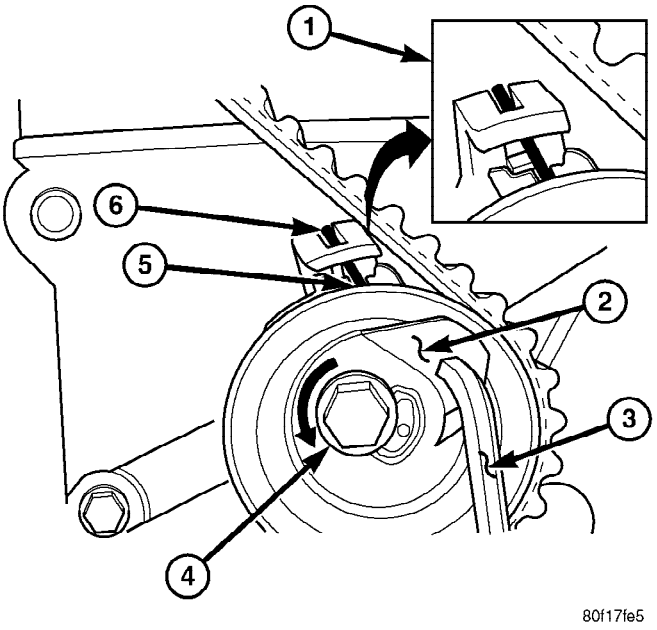

Fig. 111 Timing Belt Tension Adjustment

1 - ALIGN SETTING NOTCH WITH SPRING TANG
2 - TOP PLATE
3 - 6mm ALLEN WRENCH
4 - LOCK BOLT
5 - SETTING NOTCH
6 - SPRING TANG

NOTE: Repositioning the crankshaft to the TDC position must be done only during the CLOCKWISE rotation movement. If TDC is missed, rotate a further two revolutions until TDC is achieved. DO NOT rotate crankshaft counterclockwise as this will make verification of proper tensioner setting impossible.

(7) Rotate the crankshaft CLOCKWISE two complete revolutions manually for seating of the belt, until the crankshaft is repositioned at the TDC position. Verify that the camshaft and crankshaft timing marks are in proper position (Fig. 112).

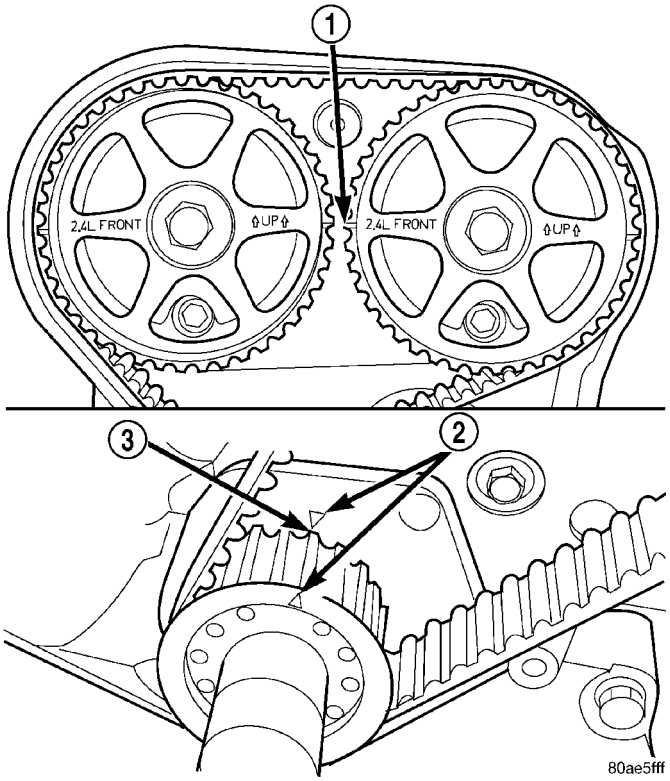

Fig. 112 Crankshaft and Camshaft Timing

1 - CAMSHAFT TIMING MARKS
2 - CRANKSHAFT TDC MARKS
3 - TRAILING EDGE OF SPROCKET TOOTH

(8) Check if the spring tang is within the tolerance window (Fig. 113). If the spring tang is within the tolerance window, the installation process is complete and nothing further is required. If the spring tang is not within the tolerance window, repeat Steps 5 through 7.

(9) Install engine mount support bracket (Fig. 100).

(10) Install upper timing belt cover. Torque fasteners to 6 N·m (50 in. lbs.) (Fig. 100).

(11) Install the lower timing belt cover. Torque fasteners to 6 N·m (50 in. lbs.) (Fig. 100).

(12) Install generator and bracket. Connect generator connections.

(13) Install AC/Generator belt tensioner.

(14) Install crankshaft damper (Refer to 9 - ENGINE/ENGINE BLOCK/VIBRATION DAMPER - INSTALLATION).

(15) Install right engine mount (Refer to 9 - ENGINE/ENGINE MOUNTING/RIGHT MOUNT - INSTALLATION).

(16) Install coolant recovery container (Refer to 7 - COOLING/ENGINE/COOLANT RECOVERY CONTAINER - INSTALLATION).

(17) Install accessory drive belts (Refer to 7 - COOLING/ACCESSORY DRIVE/DRIVE BELTS - INSTALLATION).

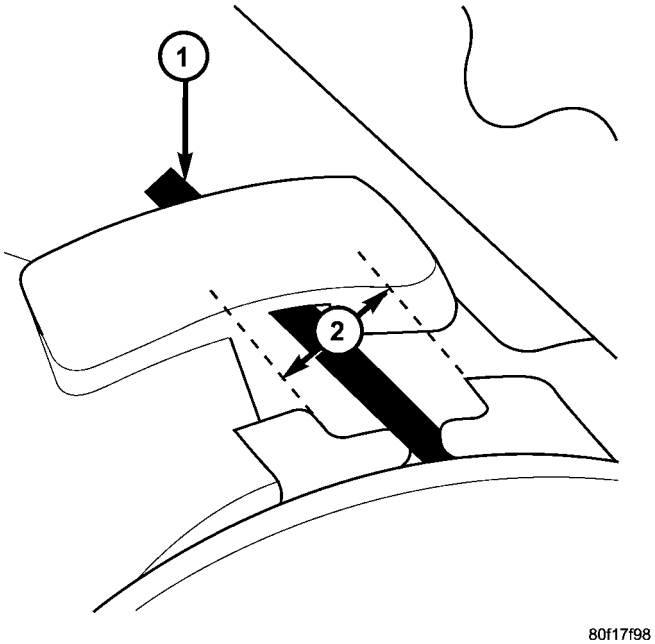

Fig. 113 Timing Belt Tension Verification

1 - SPRING TANG
2 - TOLERANCE WINDOW

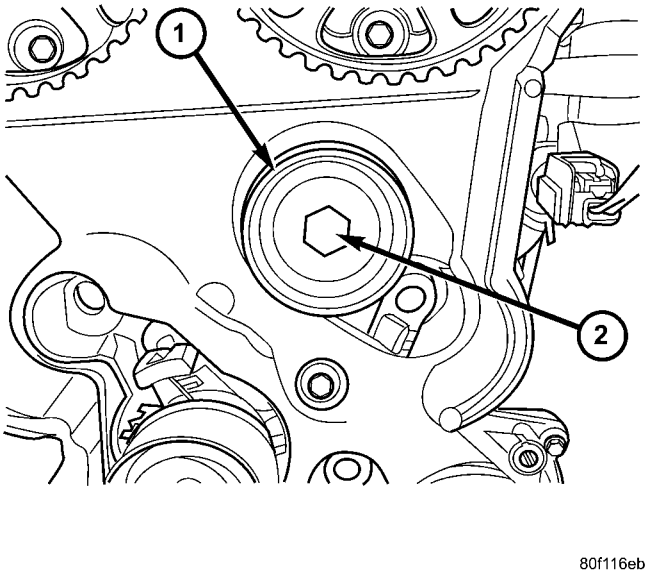

Fig. 114 Timing Belt Idler Pulley

1 - IDLER PULLEY
2 - BOLT

(18) Install belt splash shield.
(19) Install right front wheel.
(20) Connect negative battery cable.

TIMING BELT TENSIONER & PULLEY

REMOVAL

(1) Remove the timing belt (Refer to 9 - ENGINE/VALVE TIMING/TIMING BELT AND SPROCKETS - REMOVAL).
(2) Remove timing belt idler pulley (Fig. 114).
(3) Hold camshaft sprocket with Special Tool 6847 while removing bolt (Fig. 115). Remove both cam sprockets.

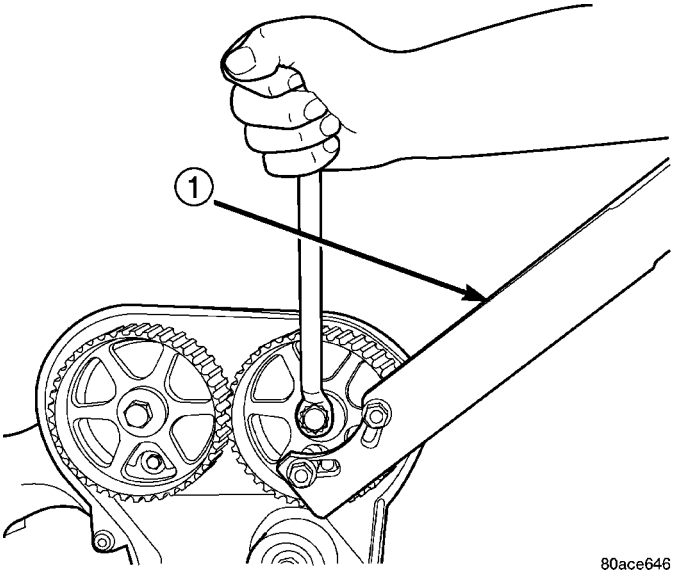

Fig. 115 Camshaft Sprocket - Removal/Installation

1 - SPECIAL TOOL 6847

TIMING BELT TENSIONER & PULLEY (Continued)

(4) Remove rear timing belt cover fasteners and remove cover from engine (Fig. 116).

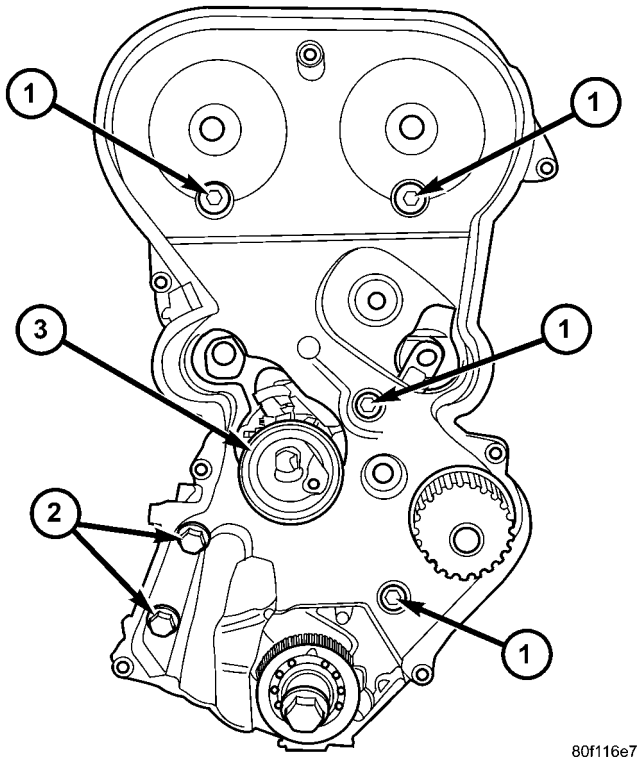

Fig. 116 Rear Timing Belt Cover Fasteners

1 - M6 BOLTS - 12 N·m (105 in. lbs.)
2 - M8 BOLTS - 28 N·m (250 in. lbs.)
3 - TIMING BELT TENSIONER

(5) Remove lower bolt attaching timing belt tensioner assembly to engine and remove tensioner **as an assembly** (Fig. 117).

INSTALLATION

(1) Align timing belt tensioner assembly to engine and install lower mounting bolt **but do not tighten** (Fig. 117). To properly align tensioner assembly—install one of the engine bracket mounting bolts (M10) 5 to 7 turns into the tensioner's upper mounting location (Fig. 117).

(2) Torque the tensioner's lower mounting bolt to 61 N·m (45 ft. lbs.). Remove the upper bolt used for tensioner alignment.

(3) Install rear timing belt cover and fasteners. Torque fasteners to values specified in (Fig. 116).

(4) Install timing belt idler pulley and torque mounting bolt to 61 N·m (45 ft. lbs.) (Fig. 114).

(5) Install camshaft sprockets. Use Special Tool 6847 to hold sprockets (Fig. 115), torque bolts to 115 N·m (85 ft. lbs.).

(6) Install the timing belt (Refer to 9 - ENGINE/VALVE TIMING/TIMING BELT AND SPROCKETS - INSTALLATION).

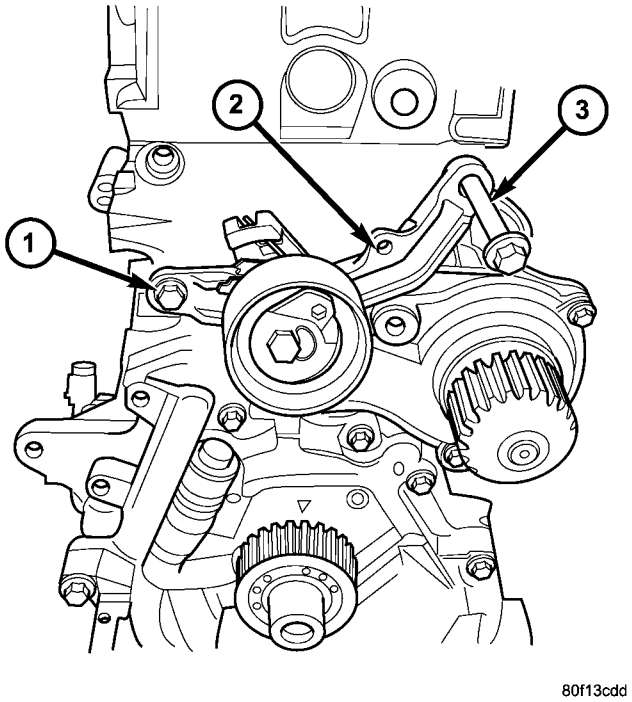

Fig. 117 Timing Belt Tensioner/Bracket Assembly

1 - BOLT
2 - TENSIONER ASSEMBLY
3 - BOLT-INSTALL FOR PROPER ALIGNMENT

BALANCE SHAFTS AND CARRIER ASSEMBLY

DESCRIPTION

The 2.4L engine is equipped with two nodular cast iron balance shafts installed in a cast aluminum carrier attached to the lower cylinder block (Fig. 118).

OPERATION

The balance shafts are driven by the crankshaft via a roller chain and sprockets. The balance shafts are connected by helical gears. The dual counter rotating shafts decrease second order vertical shaking forces caused by component movement.

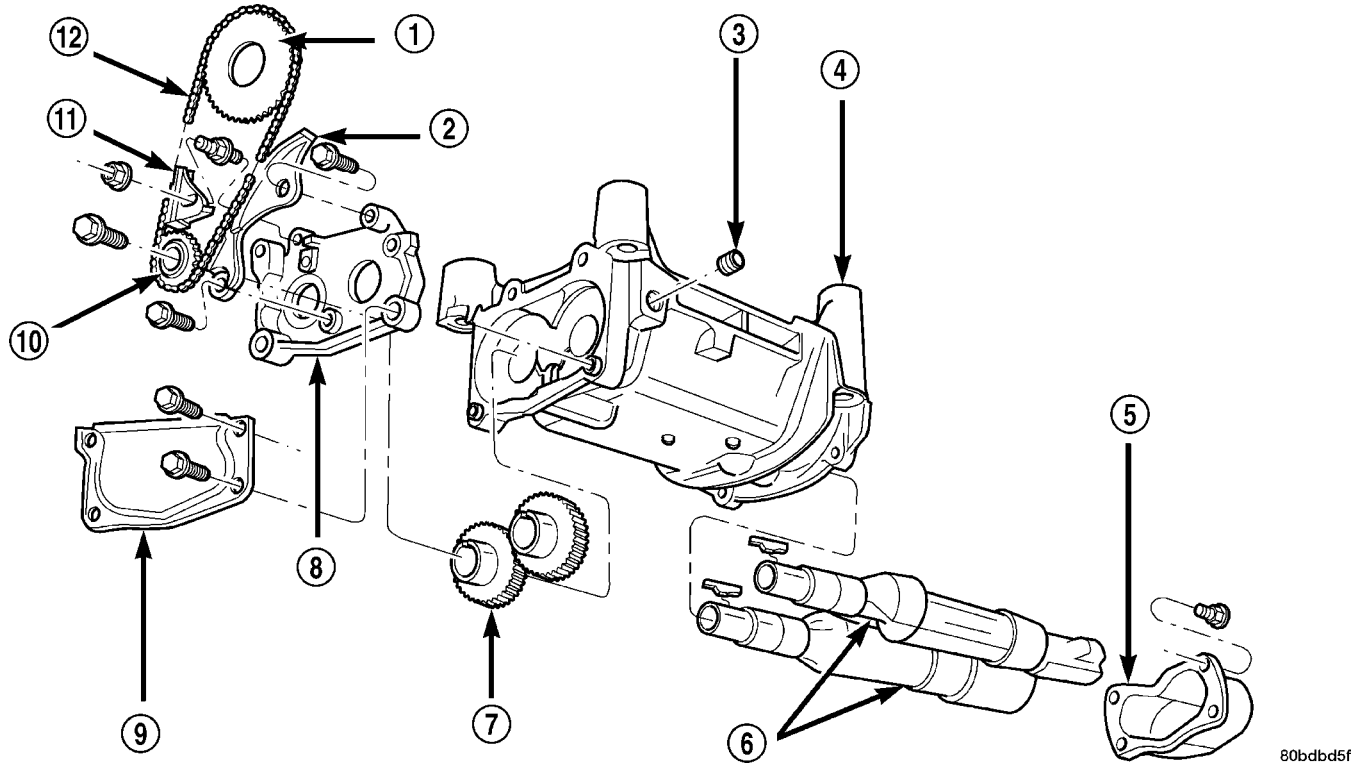

Fig. 118 Balance Shafts and Carrier Assembly

1 - SPROCKET
2 - TENSIONER
3 - PLUG
4 - CARRIER
5 - REAR COVER
6 - BALANCE SHAFTS
7 - GEARS
8 - GEAR COVER
9 - CHAIN COVER
10 - SPROCKET
11 - GUIDE
12 - CHAIN

BALANCE SHAFTS AND CARRIER ASSEMBLY (Continued)

REMOVAL

BALANCE SHAFTS/CHAIN/SPROCKETS

NOTE: For service procedures requiring only temporary relocation of carrier assembly refer to BALANCE SHAFT CARRIER procedure below.

(1) Drain engine oil.

(2) Remove the oil pan and pick-up tube (Refer to 9 - ENGINE/LUBRICATION/OIL PAN - REMOVAL).

(3) If replacing crankshaft sprocket, remove oil pump (Refer to 9 - ENGINE/LUBRICATION/OIL PUMP - REMOVAL).

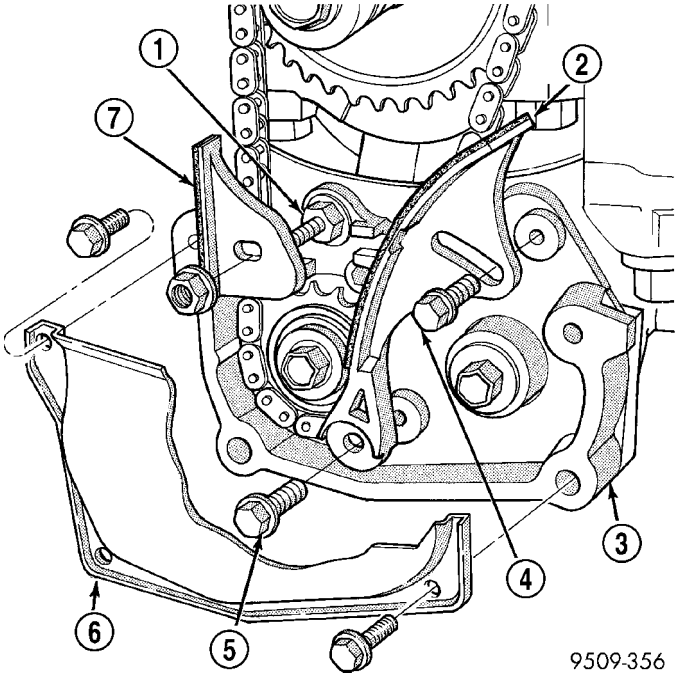

Fig. 119 Chain Cover, Guide and Tensioner

1 - STUD
2 - TENSIONER (ADJUSTER)
3 - GEAR COVER
4 - ADJUST SCREW
5 - PIVOT SHOULDER SCREW
6 - CHAIN COVER (CUTAWAY)
7 - GUIDE

(4) Remove chain cover, guide and tensioner (Fig. 119).

(5) Remove screw retaining balance shaft drive sprocket (Fig. 120). Remove chain and sprocket.

(6) Using two wide pry bars, work the crankshaft sprocket back and forth until it is off the crankshaft-shaft.

(7) Remove gear cover retaining stud (double ended to also retain chain guide). Remove cover and balance shaft gears (Fig. 121).

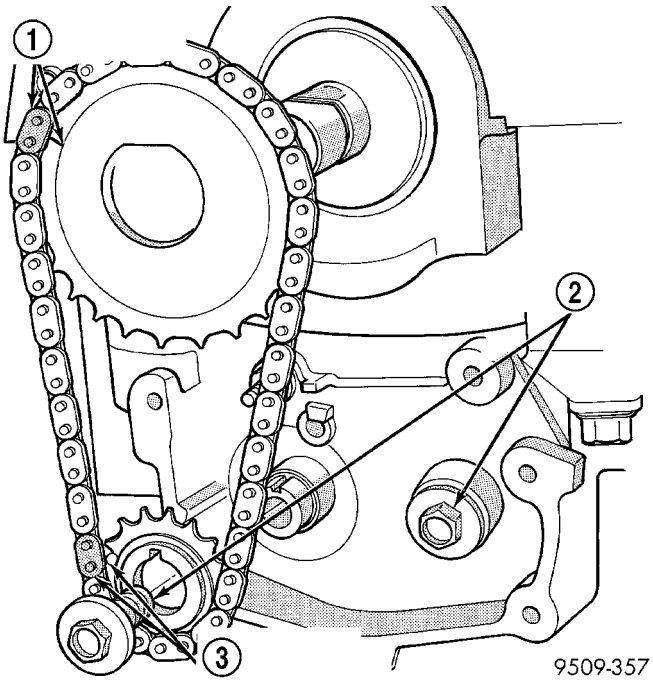

Fig. 120 Drive Chain and Sprockets

1 - NICKEL PLATED LINK AND MARK
2 - GEAR/SPROCKET SCREWS
3 - NICKEL PLATED LINK AND DOT

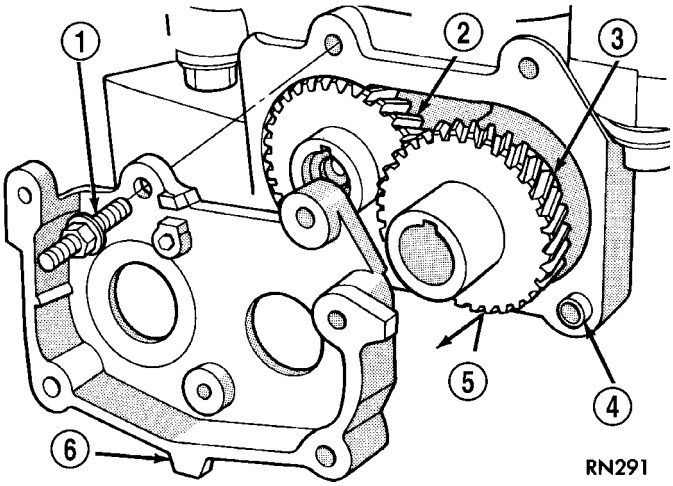

Fig. 121 Gear Cover and Gears

1 - STUD (DOUBLE ENDED)
2 - DRIVE GEAR
3 - DRIVEN GEAR
4 - CARRIER DOWEL
5 - GEAR(S)
6 - GEAR COVER

BALANCE SHAFTS AND CARRIER ASSEMBLY (Continued)

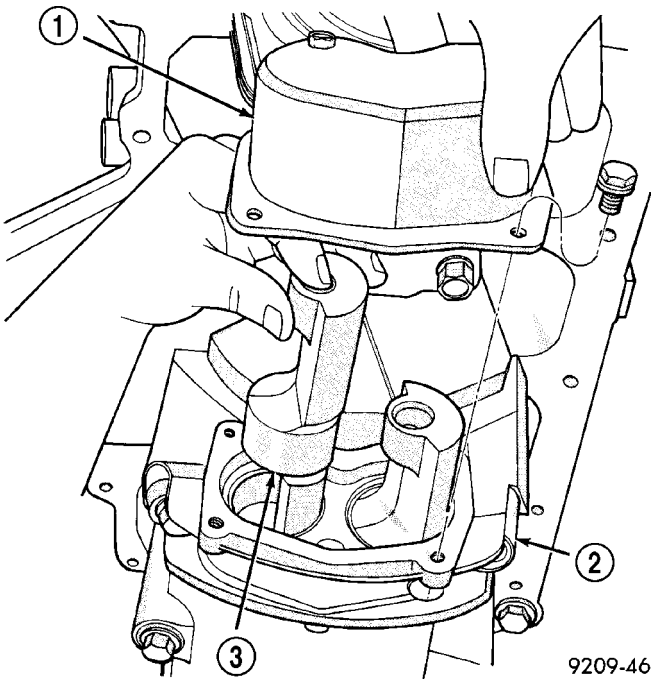

Fig. 122 Balance Shaft - Removal/Installation

1 - REAR COVER
2 - CARRIER
3 - BALANCE SHAFT

(8) Remove rear cover and balance shafts (Fig. 122).

(9) Remove four carrier to crankcase attaching bolts to separate carrier from engine bedplate.

BALANCE SHAFT CARRIER

The following components will remain intact during carrier removal: Gear cover, gears, balance shafts and the rear cover (Fig. 118).

(1) Drain engine oil.

(2) Remove the oil pan and pick-up tube (Refer to 9 - ENGINE/LUBRICATION/OIL PAN - REMOVAL).

(3) Remove chain cover, guide and tensioner (Fig. 119).

(4) Remove screw retaining balance shaft drive sprocket (Fig. 120).

(5) Move balance shaft inboard through drive chain sprocket. Sprocket will hang in lower chain loop.

(6) Remove carrier to crankcase attaching bolts to remove carrier.

INSTALLATION

BALANCE SHAFT INSTALLATION/TIMING

Balance shaft and carrier assembly installation is the reverse of the removal procedure. **During installation crankshaft-to-balance shaft timing must be established. Refer to Timing procedure in this section.**

(1) With balance shafts installed in carrier (Fig. 118) position carrier on crankcase and install four attaching bolts and tighten to 54 N·m (40 ft. lbs.).

(2) Turn balance shafts until both shaft key ways are up, parallel to vertical centerline of engine. Install short hub drive gear on sprocket driven shaft and long hub gear on gear driven shaft. After installation gear and balance shaft keyways must be up with gear timing marks meshed as shown in (Fig. 123).

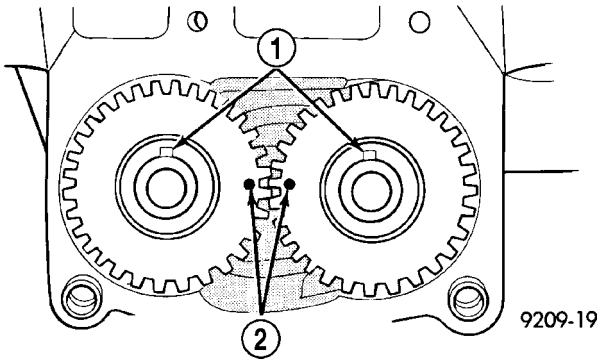

Fig. 123 Gear Timing

1 - KEY WAYS UP
2 - GEAR ALIGNMENT DOTS

(3) Install gear cover and tighten double ended stud/washer fastener to 12 N·m (105 in. lbs.).

(4) Align flat on balance shaft drive sprocket to the flat on crankshaft (Fig. 124).

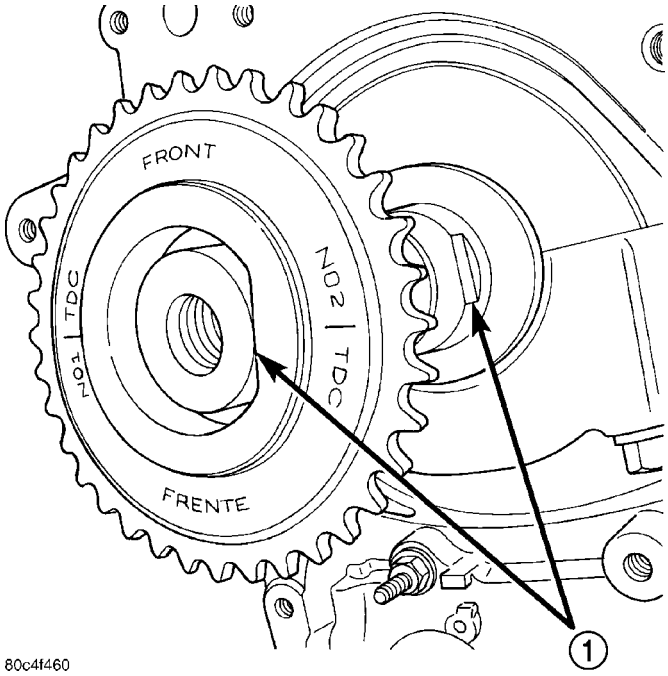

Fig. 124 Balance Shaft Sprocket Alignment to Crankshaft

1 - ALIGN FLATS

BALANCE SHAFTS AND CARRIER ASSEMBLY (Continued)

(5) Install balance shaft drive sprocket on crankshaft using Special Tool 6052 (Fig. 125).

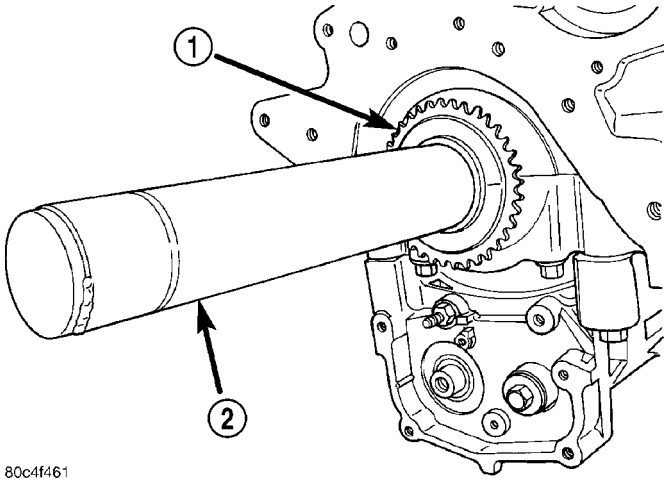

Fig. 125 Balance Shaft Drive

1 - SPROCKET
2 - SPECIAL TOOL 6052

(6) Turn crankshaft until number 1 cylinder is at top dead center (TDC). The timing marks on the chain sprocket should line up with the parting line on the left side of number one main bearing cap. (Fig. 126).

(7) Place chain over crankshaft sprocket so that the plated link of the chain is over the number 1 cylinder timing mark on the balance shaft crankshaft sprocket (Fig. 126).

(8) Place balance shaft sprocket into the timing chain (Fig. 126) and align the timing mark on the sprocket (dot) with the (lower) plated link on the chain.

NOTE: The lower plated link is 8 links from the upper link.

(9) With balance shaft keyways pointing up (12 o'clock) slide the balance shaft sprocket onto the nose of the balance shaft. The balance shaft may have to be pushed in slightly to allow for clearance.

NOTE: THE TIMING MARK ON THE SPROCKET, THE (LOWER) NICKEL PLATED LINK, AND THE ARROW ON THE SIDE OF THE GEAR COVER SHOULD LINE UP WHEN THE BALANCE SHAFTS ARE TIMED CORRECTLY.

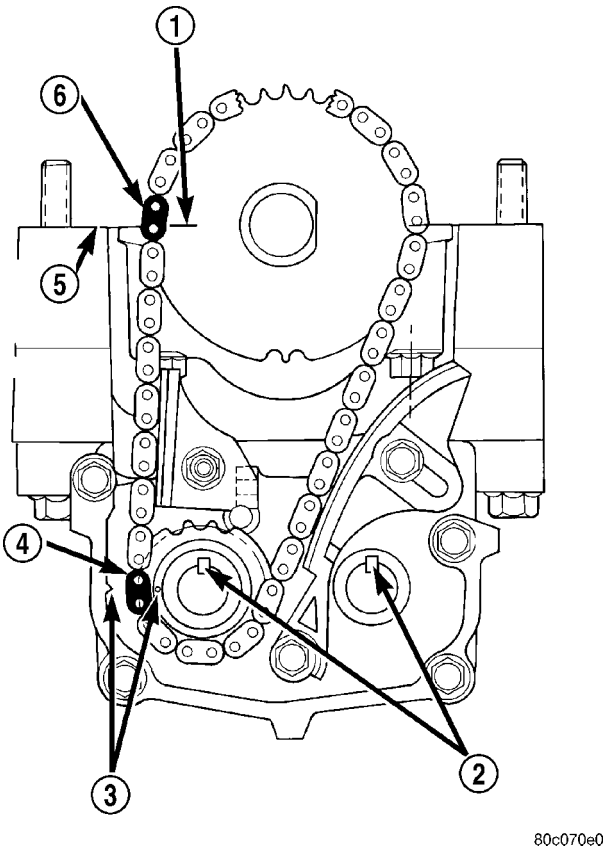

Fig. 126 Balance Shaft Timing

1 - MARK ON SPROCKET
2 - KEYWAYS UP
3 - ALIGN MARKS
4 - PLATED LINK
5 - PARTING LINE (BEDPLATE TO BLOCK)
6 - PLATED LINK

BALANCE SHAFTS AND CARRIER ASSEMBLY (Continued)

(10) If the sprockets are timed correctly, install the balance shaft bolts and tighten to 28 N·m (250 in. lbs.). A wood block placed between crankcase and crankshaft counterbalance will prevent crankshaft and gear rotation.

(11) **CHAIN TENSIONING:**

(a) Install chain tensioner loosely assembled.

(b) Position guide on double ended stud making sure tab on the guide fits into slot on the gear cover. Install and tighten nut/washer assembly to 12 N·m (105 in. lbs.).

(c) Place a shim 1 mm (0.039 in.) thick x 70 mm (2.75 in.) long between tensioner and chain. Push tensioner and shim up against the chain. **Apply firm pressure 2.5–3 Kg (5.5–6.6 lbs.) directly behind the adjustment slot to take up all slack.** Chain must have shoe radius contact as shown in (Fig. 127).

(d) With the load applied, tighten top tensioner bolt first, then bottom pivot bolt. Tighten bolts to 12 N·m (105 in. lbs.). Remove shim.

(e) Install carrier covers and tighten screws to 12 N·m (105 in. lbs.).

(12) If removed, install oil pump (Refer to 9 - ENGINE/LUBRICATION/OIL PUMP - INSTALLATION).

(13) Install pick-up tube and oil pan (Refer to 9 - ENGINE/LUBRICATION/OIL PAN - INSTALLATION).

(14) Fill engine crankcase with proper oil to correct level.

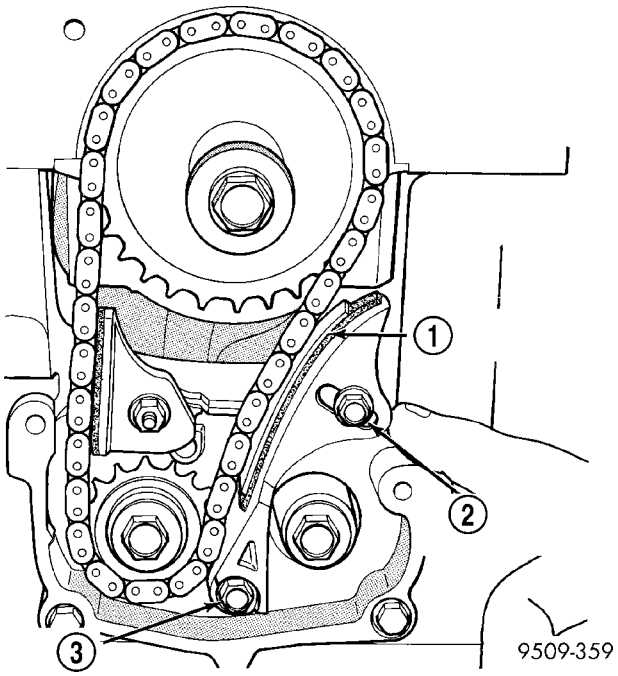

Fig. 127 Chain Tension Adjustment

1 - 1MM (0.039 IN.) SHIM
2 - TENSIONER (ADJUSTER) BOLT
3 - PIVOT BOLT

ENGINE 2.7L DOHC

TABLE OF CONTENTS

page

ENGINE 2.7L DOHC
DESCRIPTION 145
DIAGNOSIS AND TESTING
DIAGNOSIS AND TESTING - ENGINE DIAGNOSIS - INTRODUCTION 146
DIAGNOSIS AND TESTING - ENGINE DIAGNOSIS - PERFORMANCE 146
DIAGNOSIS AND TESTING - ENGINE DIAGNOSIS - MECHANICAL 148
DIAGNOSIS AND TESTING - CYLINDER COMPRESSION PRESSURE TEST 150
DIAGNOSIS AND TESTING - CYLINDER COMBUSTION PRESSURE LEAKAGE TEST . . 150
DIAGNOSIS AND TESTING - ENGINE OIL LEAK INSPECTION 150
STANDARD PROCEDURE
STANDARD PROCEDURE - REPAIR OF DAMAGED OR WORN THREADS 151
STANDARD PROCEDURE - HYDROSTATIC LOCKED ENGINE 151
STANDARD PROCEDURE - FORM-IN-PLACE GASKETS AND SEALERS 152
STANDARD PROCEDURE - ENGINE GASKET SURFACE PREPARATION 153
STANDARD PROCEDURE - ENGINE CORE AND OIL GALLERY PLUGS 153
REMOVAL - ENGINE ASSEMBLY 153
INSTALLATION - ENGINE ASSEMBLY 155
SPECIFICATIONS
2.7L ENGINE 156
TORQUE 159
SPECIAL TOOLS
2.7L ENGINE 160
AIR CLEANER ELEMENT
REMOVAL 164
INSTALLATION 165
AIR CLEANER HOUSING
REMOVAL 165
INSTALLATION 165
CYLINDER HEAD
DESCRIPTION 166
DIAGNOSIS AND TESTING—CYLINDER HEAD GASKET 167
STANDARD PROCEDURE - Cylinder Head Oil Gallery Cup Plug Service 167
REMOVAL 168
CLEANING 170
INSPECTION 170
INSTALLATION 170

page

CAMSHAFT(S)
DESCRIPTION 171
OPERATION 171
REMOVAL 172
INSPECTION 173
INSTALLATION 173
CYLINDER HEAD COVER - LEFT
REMOVAL 174
INSTALLATION 174
CYLINDER HEAD COVER - RIGHT
REMOVAL 175
INSTALLATION 175
INTAKE/EXHAUST VALVES & SEATS
DESCRIPTION 175
STANDARD PROCEDURE - VALVE AND VALVE SEAT REFACING 175
REMOVAL 177
INSPECTION 177
INSTALLATION 177
VALVE SPRINGS
DESCRIPTION 178
REMOVAL
REMOVAL - IN VEHICLE 178
REMOVAL - OFF VEHICLE 178
INSPECTION 178
INSTALLATION
INSTALLATION - IN VEHICLE 180
INSTALLATION - OFF VEHICLE 180
VALVE STEM SEALS
REMOVAL 181
INSTALLATION 181
HYDRAULIC LASH ADJUSTERS
DIAGNOSIS AND TESTING - HYDRAULIC LASH ADJUSTER NOISE DIAGNOSIS 181
REMOVAL 182
INSTALLATION 182
ROCKER ARMS
DESCRIPTION 182
REMOVAL 183
INSPECTION 183
INSTALLATION 183
ENGINE BLOCK
DESCRIPTION 184
STANDARD PROCEDURE - CYLINDER BORE HONING 184
CLEANING 185
INSPECTION 185
CONNECTING ROD BEARINGS
STANDARD PROCEDURE - CONNECTING ROD AND BEARING FITTING 186

CRANKSHAFT
DESCRIPTION 187
STANDARD PROCEDURE - CRANKSHAFT END PLAY 187
REMOVAL 187
INSTALLATION 188
CRANKSHAFT MAIN BEARINGS
STANDARD PROCEDURE - CRANKSHAFT MAIN BEARING FITTING 190
CRANKSHAFT OIL SEAL - FRONT
REMOVAL 191
INSTALLATION 192
CRANKSHAFT OIL SEAL - REAR
REMOVAL 192
INSTALLATION 192
CRANKSHAFT REAR OIL SEAL RETAINER
REMOVAL 193
INSTALLATION 193
PISTON & CONNECTING ROD
DESCRIPTION 194
STANDARD PROCEDURE - FITTING PISTONS . 194
REMOVAL 194
INSTALLATION 195
PISTON RINGS
STANDARD PROCEDURE - PISTON RING FITTING 197
REMOVAL 197
INSTALLATION 197
VIBRATION DAMPER
REMOVAL 199
INSTALLATION 199
STRUCTURAL COLLAR
REMOVAL 199
INSTALLATION 200
ENGINE MOUNTING
ADJUSTMENTS
ENGINE SUPPORT ADJUSTMENT 200
LEFT MOUNT
REMOVAL 200
INSTALLATION 200
REAR MOUNT
REMOVAL 201
INSTALLATION 201
RIGHT MOUNT
REMOVAL 201
INSTALLATION 201
FRONT MOUNT
REMOVAL 202
INSTALLATION 202
LUBRICATION
DESCRIPTION 203
OPERATION 203
DIAGNOSIS AND TESTING - CHECKING ENGINE OIL PRESSURE 206
OIL
DESCRIPTION 206
STANDARD PROCEDURE
STANDARD PROCEDURE - ENGINE OIL AND FILTER CHANGE 206
STANDARD PROCEDURE - ENGINE OIL LEVEL CHECK 207
OIL FILTER
REMOVAL 207
INSTALLATION 207
OIL PAN
REMOVAL 208
INSTALLATION 208
OIL PRESSURE RELIEF VALVE
REMOVAL 209
INSTALLATION 209
OIL PRESSURE SWITCH
DESCRIPTION 209
REMOVAL 209
INSTALLATION 209
OIL PUMP
REMOVAL 210
DISASSEMBLY 210
CLEANING 211
INSPECTION 211
ASSEMBLY 212
INSTALLATION 212
INTAKE MANIFOLD
DIAGNOSIS AND TESTING - INTAKE MANIFOLD LEAKS 213
STANDARD PROCEDURE - INTAKE MANIFOLD VACUUM PORT REPAIR 213
REMOVAL
REMOVAL - INTAKE MANIFOLD UPPER . . . 213
REMOVAL - INTAKE MANIFOLD LOWER . . . 214
INSPECTION
INSPECTION - INTAKE MANIFOLD UPPER . 214
INSPECTION - INTAKE MANIFOLD LOWER . 214
INSTALLATION
INSTALLATION - INTAKE MANIFOLD UPPER . 214
INSTALLATION - INTAKE MANIFOLD LOWER . 215
EXHAUST MANIFOLD
REMOVAL 215
INSPECTION 216
INSTALLATION 216
VALVE TIMING
DESCRIPTION 216
STANDARD PROCEDURE
ENGINE TIMING - VERIFICATION 218
TIMING CHAIN COVER
REMOVAL 219
INSTALLATION 219
TIMING CHAIN AND SPROCKETS
REMOVAL
REMOVAL - TIMING CHAIN 220
REMOVAL - CRANKSHAFT SPROCKET . . . 222
INSTALLATION
INSTALLATION - TIMING CHAIN 222
INSTALLATION - CRANKSHAFT SPROCKET . 226

ENGINE 2.7L DOHC

DESCRIPTION

The 2.7 Liter (167 Cubic Inches) 60 degree V-6 engine is a double overhead camshaft design with hydraulic lifters and four valves per cylinder (Fig. 1). The engine does not have provisions for a free wheeling valve train.

The cylinders are numbered from front to rear, with the right bank odd numbered, and the left bank even numbered (Fig. 2). The firing order is 1–2–3–4–5–6.

The engine identification number is located on the rear of the cylinder block just below the left cylinder head (Fig. 3)

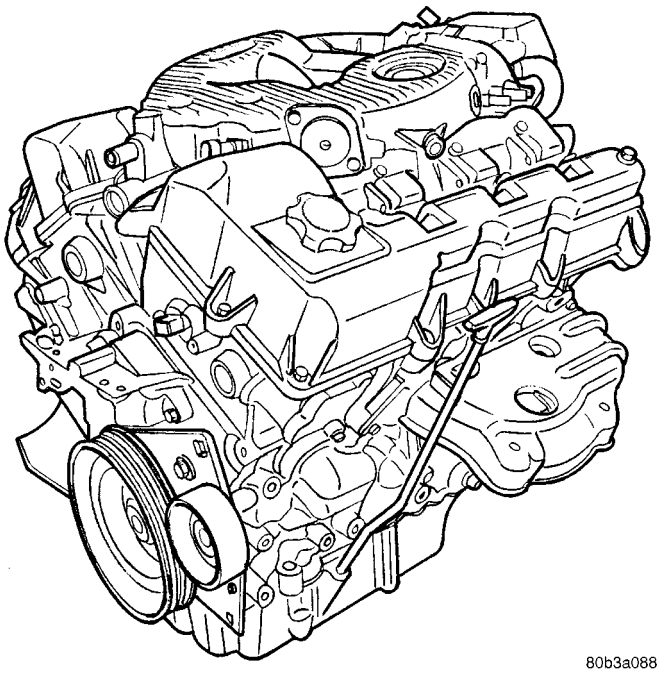

Fig. 1 2.7 Liter Engine

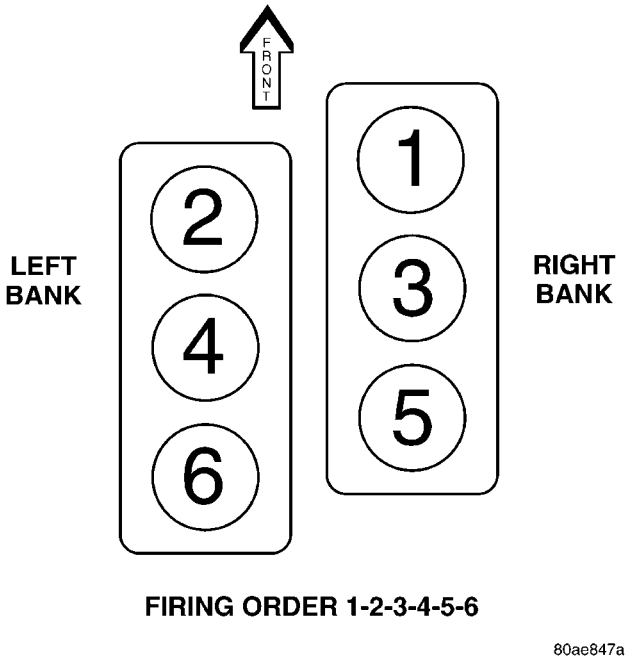

Fig. 2 Cylinder Numbering and Firing Order

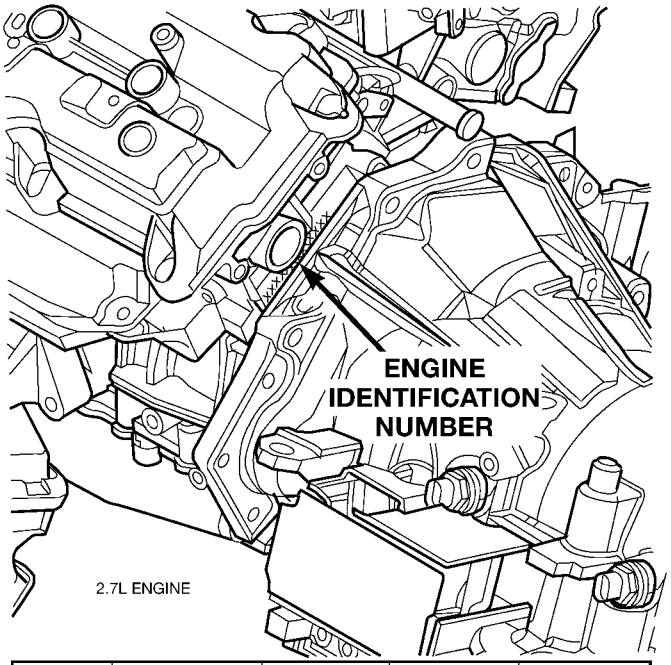

X MODEL YEAR	X MANUFACTURING PLANT	XXXXX COMPONENT CODE/USAGE	XXXX MONTH/DAY	XXXXX SERIAL CODE
LAST DIGIT OF MODEL YEAR	KENOSHA 9	ENGINE 2.7L USAGE PASS CAR PC		

80ae830a

Fig. 3 Engine Identification

ENGINE 2.7L DOHC (Continued)

DIAGNOSIS AND TESTING

DIAGNOSIS AND TESTING - ENGINE DIAGNOSIS - INTRODUCTION

Engine diagnosis is helpful in determining the causes of malfunctions not detected and remedied by routine maintenance.

These malfunctions may be classified as either mechanical (e.g., a strange noise), or performance (e.g., engine idles rough and stalls).

Refer to Service Diagnosis—Mechanical Chart and Service Diagnosis—Performance Chart, for possible causes and corrections of malfunctions. Refer to FUEL SYSTEM for the fuel system diagnosis.

Additional tests and diagnostic procedures may be necessary for specific engine malfunctions that cannot be isolated with the Service Diagnosis charts. Information concerning additional tests and diagnosis is provided within the following:

- Cylinder Compression Pressure Test
- Cylinder Combustion Pressure Leakage Test
- Cylinder Head Gasket Failure Diagnosis
- Intake Manifold Leakage Diagnosis
- Lash Adjuster (Tappet) Noise Diagnosis
- Engine Oil Leak Inspection

DIAGNOSIS AND TESTING - ENGINE DIAGNOSIS - PERFORMANCE

CONDITION	POSSIBLE CAUSE	CORRECTION
ENGINE WILL NOT START	1. Weak battery.	1. Test battery. Charge or replace as necessary. (Refer to 8 - ELECTRICAL/BATTERY SYSTEM/ BATTERY - DESCRIPTION)
	2. Corroded or loose battery connections.	2. Clean and tighten battery connections. Apply a coat of light mineral grease to terminals.
	3. Faulty starter.	3. Test starting system. (Refer to 8 - ELECTRICAL/STARTING - DIAGNOSIS AND TESTING)
	4. Faulty coil(s) or control unit.	4. Test and replace as needed. (Refer to Appropriate Diagnostic Information)
	5. Incorrect spark plug gap.	5. Check and adjust gap as needed.
	6. Contamination in fuel system.	6. Clean system and replace fuel filter.
	7. Faulty fuel pump.	7. Test fuel pump and replace as needed. (Refer to Appropriate Diagnostic Information)
	8. Incorrect engine timing.	8. Check for a skipped timing chain.
ENGINE STALLS OR IDLES ROUGH	1. Idle speed too low.	1. Test minimum air flow. (Refer to Appropriate Diagnostic Information)
	2. Incorrect fuel mixture.	2. (Refer to Appropriate Diagnostic Information)
	3. Intake manifold leakage.	3. Inspect intake manifold gasket, manifold, and vacuum hoses.
	4. Faulty coil(s).	4. Test and replace as necessary. (Refer to Appropriate Diagnostic Information)

ENGINE 2.7L DOHC (Continued)

CONDITION	POSSIBLE CAUSE	CORRECTION
ENGINE LOSS OF POWER	1. Dirty or incorrectly gapped plugs.	1. Set gap as needed or replace plug(s).
	2. Contamination in fuel system.	2. Clean system and replace fuel filter.
	3. Faulty fuel pump.	3. Test and replace as necessary. (Refer to Appropriate Diagnostic Information)
	4. Incorrect valve timing.	4. Correct valve timing as needed.
	5. Leaking cylinder head gasket.	5. Replace cylinder head gasket.
	6. Low compression.	6. Test compression of each cylinder.
	7. Burned, warped, or pitted valves.	7. Replace valves.
	8. Plugged or restricted exhaust system.	8. Check exhaust system restriction. Replace parts, as necessary.
	9. Faulty coil(s).	9. Test and replace as necessary. (Refer to Appropriate Diagnostic Information)
ENGINE MISSES ON ACCELERATION	1. Dirty or incorrectly gapped spark plugs.	1. Set gap as needed or replace plug(s).
	2. Contamination in Fuel System.	2. Clean fuel system and replace fuel filter.
	3. Burned, warped, or pitted valves.	3. Replace valves.
	4. Faulty coil(s).	4. Test and replace as necessary. (Refer to Appropriate Diagnostic Information)
ENGINE MISSES AT HIGH SPEED	1. Dirty or incorrect spark plug gap.	1. Set gap as needed or replace plug(s).
	2. Faulty coil(s).	2. Test and replace as necessary. (Refer to Appropriate Diagnostic Information)
	3. Dirty fuel injector(s).	Test and replace as necessary. (Refer to Appropriate Diagnostic Information)
	4. Contamination in fuel system.	4. Clean system and replace fuel filter.

ENGINE 2.7L DOHC (Continued)

DIAGNOSIS AND TESTING - ENGINE DIAGNOSIS - MECHANICAL

CONDITION	POSSIBLE CAUSES	CORRECTION
NOISY VALVES	1. High or low oil level in crankcase.	1. Check and correct engine oil level.
	2. Thin or diluted oil.	2. Change oil to correct viscosity.
	3. Thick oil	3. (a.) Change oil and filter. (b.) Run engine to operating temperature. (c.) Change oil and filter again.
	4. Low oil pressure.	4. Check and correct engine oil level.
	5. Dirt in tappets/lash adjusters.	5. Replace rocker arm/hydraulic lash adjuster assembly.
	6. Worn rocker arms.	6. Inspect oil supply to rocker arms.
	7. Worn tappets/lash adjusters.	7. Install new rocker arm/hydraulic lash adjuster assembly.
	8. Worn valve guides.	8. Ream guides and install new valves with oversize stems.
	9. Excessive runout of valve seats on valve faces.	9. Grind valve seats and valves.
	10. Missing adjuster pivot.	10. Replace rocker arm/hydraulic lash adjuster assembly.
CONNECTING ROD NOISE	1. Insufficient oil supply.	1. Check engine oil level.
	2. Low oil pressure.	2. Check engine oil level. Inspect oil pump relief valve and spring.
	3. Thin or diluted oil.	3. Change oil to correct viscosity.
	4. Thick oil	3. (a.) Change oil and filter. (b.) Run engine to operating temperature. (c.) Change oil and filter again.
	5. Excessive bearing clearance.	5. Measure bearings for correct clearance. Repair as necessary.
	6. Connecting rod journal out-of-round.	6. Replace crankshaft or grind surface.
	7. Misaligned connecting rods.	7. Replace bent connecting rods.
MAIN BEARING NOISE	1. Insufficient oil supply.	1. Check engine oil level.
	2. Low oil pressure.	2. Check engine oil level. Inspect oil pump relief valve and spring.
	3. Thin or diluted oil.	3. Change oil to correct viscosity.
	4. Thick oil	3. (a.) Change oil and filter. (b.) Run engine to operating temperature. (c.) Change oil and filter again.
	4. Excessive bearing clearance.	4. Measure bearings for correct clearance. Repair as necessary.
	5. Excessive end play.	5. Check thrust bearing for wear on flanges.
	6. Crankshaft journal out-of-round or worn.	6. Replace crankshaft or grind journals.
	7. Loose flywheel or torque converter.	7. Tighten to correct torque.

ENGINE 2.7L DOHC (Continued)

CONDITION	POSSIBLE CAUSES	CORRECTION
OIL PRESSURE DROP	1. Low oil level.	1. Check engine oil level.
	2. Faulty oil pressure sending unit.	2. Install new sending unit.
	3. Low oil pressure.	3. Check sending unit and main bearing oil clearance.
	4. Clogged oil filter.	4. Install new oil filter.
	5. Worn parts in oil pump.	5. Replace worn parts or pump.
	6. Thin or diluted oil.	6. Change oil to correct viscosity.
	7. Oil pump relief valve stuck.	7. Remove valve and inspect, clean, or replace.
	8. Oil pump suction tube loose.	8. Remove oil pan and install new tube or clean, if necessary.
	9. Oil pump cover warped or cracked.	9. Install new oil pump.
	10. Excessive bearing clearance.	10. Measure bearings for correct clearance.
OIL LEAKS	1. Misaligned or deteriorated gaskets.	1. Replace gasket(s).
	2. Loose fastener, broken or porous metal part.	2. Tighten, repair or replace the part.
	3. Misaligned or deteriorated cup or threaded plug.	3. Replace as necessary.
OIL CONSUMPTION OR SPARK PLUGS FOULED	1. PCV system malfunction.	1. Check system and repair as necessary. (Refer to Appropriate Diagnostic Manual)
	2. Worn, scuffed or broken rings.	2. Hone cylinder bores. Install new rings.
	3. Carbon in oil ring slots.	3. Clean pistons and install new rings.
	4. Rings fitted too tightly in grooves.	4. Remove rings and check grooves. If groove is not proper width, replace piston.
	5. Worn valve guide(s).	5. Replace cylinder head(s).
	6. Valve stem seal(s) worn or damaged.	6. Replace seal(s).

ENGINE 2.7L DOHC (Continued)

DIAGNOSIS AND TESTING - CYLINDER COMPRESSION PRESSURE TEST

The results of a cylinder compression pressure test can be utilized to diagnose several engine malfunctions.

Ensure the battery is completely charged and the engine starter motor is in good operating condition. Otherwise the indicated compression pressures may not be valid for diagnosis purposes.

(1) Check engine oil level and add oil if necessary.

(2) Drive the vehicle until engine reaches normal operating temperature. Select a route free from traffic and other forms of congestion, observe all traffic laws, and accelerate through the gears several times briskly.

(3) Remove all spark plugs from engine. As spark plugs are being removed, check electrodes for abnormal firing indicators fouled, hot, oily, etc. Record cylinder number of spark plug for future reference.

(4) Remove the Auto Shutdown (ASD) relay from the PDC.

(5) Be sure throttle blade is fully open during the compression check.

(6) Insert compression gauge adaptor Special Tool 8116 or the equivalent, into the #1 spark plug hole in cylinder head. Connect the 0–500 psi (Blue) pressure transducer (Special Tool CH7059) with cable adaptors to the DRBIII®. For Special Tool identification, (Refer to 9 - ENGINE - SPECIAL TOOLS).

(7) Crank engine until maximum pressure is reached on gauge. Record this pressure as #1 cylinder pressure.

(8) Repeat the previous step for all remaining cylinders.

(9) Compression should not be less than 689 kPa (100 psi) and not vary more than 25 percent from cylinder to cylinder.

(10) If one or more cylinders have abnormally low compression pressures, repeat the compression test.

(11) If the same cylinder or cylinders repeat an abnormally low reading on the second compression test, it could indicate the existence of a problem in the cylinder in question. **The recommended compression pressures are to be used only as a guide to diagnosing engine problems. An engine should not be disassembled to determine the cause of low compression unless some malfunction is present.**

DIAGNOSIS AND TESTING - CYLINDER COMBUSTION PRESSURE LEAKAGE TEST

The combustion pressure leakage test provides an accurate means for determining engine condition.

Combustion pressure leakage testing will detect:

- Exhaust and intake valve leaks (improper seating).
- Leaks between adjacent cylinders or into water jacket.
- Any causes for combustion/compression pressure loss.

WARNING: DO NOT REMOVE THE PRESSURE CAP WITH THE SYSTEM HOT AND UNDER PRESSURE BECAUSE SERIOUS BURNS FROM COOLANT CAN OCCUR.

Check the coolant level and fill as required. DO NOT install the pressure cap.

Start and operate the engine until it attains normal operating temperature, then turn the engine OFF.

Clean spark plug recesses with compressed air.

Remove the spark plugs.

Remove the oil filler cap.

Remove the air cleaner.

Calibrate the tester according to the manufacturer's instructions. The shop air source for testing should maintain 483 kPa (70 psi) minimum, 1,379 kPa (200 psi) maximum, with 552 kPa (80 psi) recommended.

Perform the test procedures on each cylinder according to the tester manufacturer's instructions. While testing, listen for pressurized air escaping through the throttle body, tailpipe and oil filler cap opening. Check for bubbles in the coolant.

All gauge pressure indications should be equal, with no more than 25% leakage per cylinder.

FOR EXAMPLE: At 552 kPa (80 psi) input pressure, a minimum of 414 kPa (60 psi) should be maintained in the cylinder.

DIAGNOSIS AND TESTING - ENGINE OIL LEAK INSPECTION

Begin with a thorough visual inspection of the engine, particularly at the area of the suspected leak. If an oil leak source is not readily identifiable, the following steps should be followed:

(1) Do not clean or degrease the engine at this time because some solvents may cause rubber to swell, temporarily stopping the leak.

(2) Add an oil soluble dye (use as recommended by manufacturer). Start the engine and let idle for approximately 15 minutes. Check the oil dipstick to make sure the dye is thoroughly mixed as indicated with a bright yellow color under a black light.

(3) Using a black light, inspect the entire engine for fluorescent dye, particularly at the suspected area of oil leak. If the oil leak is found and identified, repair as necessary.

(4) If dye is not observed, drive the vehicle at various speeds for approximately 24 km (15 miles), and repeat inspection.

ENGINE 2.7L DOHC (Continued)

(5) **If the oil leak source is not positively identified at this time**, proceed with the air leak detection test method as follows:

- Disconnect the fresh air hose (make-up air) at the cylinder head cover and plug or cap the nipple on the cover.
- Remove the PCV valve hose from the cylinder head cover. Cap or plug the PCV valve nipple on the cover.
- Attach an air hose with pressure gauge and regulator to the dipstick tube.

CAUTION: Do not subject the engine assembly to more than 20.6 kpa (3 PSI) of test pressure.

- Gradually apply air pressure from 1 psi to 2.5 psi maximum while applying soapy water at the suspected source. Adjust the regulator to the suitable test pressure that provides the best bubbles which will pinpoint the leak source. If the oil leak is detected and identified, repair per service manual procedures.
- If the leakage occurs at the crankshaft rear oil seal area, refer to the section, Inspection for Rear Seal Area Leak.

(6) If no leaks are detected, turn off the air supply. Remove the air hose, all plugs, and caps. Install the PCV valve and fresh air hose (make-up air). Proceed to next step.

(7) Clean the oil off the suspect oil leak area using a suitable solvent. Drive the vehicle at various speeds approximately 24 km (15 miles). Inspect the engine for signs of an oil leak by using a black light.

NOTE: If oil leakage is observed at the dipstick tube to block location; remove the tube, clean and reseal using Mopar® Stud & Bearing Mount (press fit tube applications only), and for O-ring style tubes, remove tube and replace the O-ring seal.

INSPECTION FOR REAR SEAL AREA LEAKS

Since it is sometimes difficult to determine the source of an oil leak in the rear seal area of the engine, a more involved inspection is necessary. The following steps should be followed to help pinpoint the source of the leak.

If the leakage occurs at the crankshaft rear oil seal area:

(1) Disconnect the battery.

(2) Raise the vehicle.

(3) Remove torque converter or clutch housing cover and inspect rear of block for evidence of oil. Use a black light to check for the oil leak. If a leak is present in this area, remove transmission for further inspection.

(a) Circular spray pattern generally indicates seal leakage or crankshaft damage.

(b) Where leakage tends to run straight down, possible causes are a porous block, oil gallery cup plug, bedplate to cylinder block mating surfaces and seal bore. See proper repair procedures for these items.

(4) If no leaks are detected, pressurize the crankcase as previously described.

CAUTION: Do not exceed 20.6 kPa (3 psi).

(5) If the leak is not detected, very slowly turn the crankshaft and watch for leakage. If a leak is detected between the crankshaft and seal while slowly turning the crankshaft, it is possible the crankshaft seal surface is damaged. The seal area on the crankshaft could have minor nicks or scratches that can be polished out with emery cloth.

CAUTION: Use extreme caution when crankshaft polishing is necessary to remove minor nicks and scratches. The crankshaft seal flange is especially machined to complement the function of the rear oil seal.

(6) For bubbles that remain steady with shaft rotation, no further inspection can be done until disassembled.

(7) After the oil leak root cause and appropriate corrective action have been identified, replace component(s) as necessary.

STANDARD PROCEDURE

STANDARD PROCEDURE - REPAIR OF DAMAGED OR WORN THREADS

Damaged or worn threads (excluding spark plug and camshaft bearing cap attaching threads) can be repaired. Essentially, this repair consists of drilling out worn or damaged threads, tapping the hole with a special Heli-Coil Tap, (or equivalent) and installing an insert into the tapped hole. This brings the hole back to its original thread size.

CAUTION: Be sure that the tapped holes maintain the original center line.

Heli-Coil tools and inserts are readily available from automotive parts jobbers.

STANDARD PROCEDURE - HYDROSTATIC LOCKED ENGINE

When an engine is suspected to be hydrostatically locked, regardless of what caused the problem, the following steps should be used.

ENGINE 2.7L DOHC (Continued)

CAUTION: DO NOT use starter motor to rotate the engine, severe damage may occur.

(1) Inspect air cleaner, induction system and intake manifold to insure system is dry and clear of foreign material.
(2) Remove negative battery cable.
(3) Place a shop towel around the spark plugs when removing them from the engine. This will catch any fluid that may possibly be in the cylinder under pressure.
(4) With all spark plugs removed, rotate engine crankshaft using a breaker bar and socket.
(5) Identify the fluid in the cylinder(s) (i.e., coolant, fuel, oil or other).
(6) Make sure all fluid has been removed from the cylinders. Inspect engine for damage (i.e., connecting rods, pistons, valves, etc.)
(7) Repair engine or components as necessary to prevent this problem from re-occurring.

CAUTION: Squirt approximately one teaspoon of oil into the cylinders, rotate engine to lubricate the cylinder walls to prevent damage on restart.

(8) Install new spark plugs.
(9) Drain engine oil and remove oil filter.
(10) Install a new oil filter.
(11) Fill engine with specified amount of approved oil.
(12) Connect negative battery cable.
(13) Start engine and check for any leaks.

STANDARD PROCEDURE - FORM-IN-PLACE GASKETS AND SEALERS

There are numerous places where form-in-place gaskets are used on the engine. Care must be taken when applying form-in-place gaskets to assure obtaining the desired results. **Do not use form-in-place gasket material unless specified.** Bead size, continuity, and location are of great importance. Too thin a bead can result in leakage while too much can result in spill-over which can break off and obstruct fluid feed lines. A continuous bead of the proper width is essential to obtain a leak-free gasket.

There are numerous types of form-in-place gasket materials that are used in the engine area. Mopar® Engine RTV GEN II, Mopar® ATF-RTV, and Mopar® Gasket Maker gasket materials, each have different properties and can not be used in place of the other.

MOPAR® ENGINE RTV GEN II is used to seal components exposed to engine oil. This material is a specially designed black silicone rubber RTV that retains adhesion and sealing properties when exposed to engine oil. Moisture in the air causes the material to cure. This material is available in three ounce tubes and has a shelf life of one year. After one year this material will not properly cure. Always inspect the package for the expiration date before use.

MOPAR® ATF RTV is a specifically designed black silicone rubber RTV that retains adhesion and sealing properties to seal components exposed to automatic transmission fluid, engine coolants, and moisture. This material is available in three ounce tubes and has a shelf life of one year. After one year this material will not properly cure. Always inspect the package for the expiration date before use.

MOPAR® GASKET MAKER is an anaerobic type gasket material. The material cures in the absence of air when squeezed between two metallic surfaces. It will not cure if left in the uncovered tube. The anaerobic material is for use between two machined surfaces. Do not use on flexible metal flanges.

MOPAR® BED PLATE SEALANT is a unique (green-in-color) anaerobic type gasket material that is specially made to seal the area between the bedplate and cylinder block without disturbing the bearing clearance or alignment of these components. The material cures slowly in the absence of air when torqued between two metallic surfaces, and will rapidly cure when heat is applied.

MOPAR® GASKET SEALANT is a slow drying, permanently soft sealer. This material is recommended for sealing threaded fittings and gaskets against leakage of oil and coolant. Can be used on threaded and machined parts under all temperatures. This material is used on engines with multilayer steel (MLS) cylinder head gaskets. This material also will prevent corrosion. Mopar® Gasket Sealant is available in a 13 oz. aerosol can or 4oz./16 oz. can w/applicator.

SEALER APPLICATION

Mopar® Gasket Maker material should be applied sparingly 1 mm (0.040 in.) diameter or less of sealant to one gasket surface. Be certain the material surrounds each mounting hole. Excess material can easily be wiped off. Components should be torqued in place within 15 minutes. The use of a locating dowel is recommended during assembly to prevent smearing material off the location.

Mopar® Engine RTV GEN II or ATF RTV gasket material should be applied in a continuous bead approximately 3 mm (0.120 in.) in diameter. All mounting holes must be circled. For corner sealing, a 3.17 or 6.35 mm (1/8 or 1/4 in.) drop is placed in the center of the gasket contact area. Uncured sealant may be removed with a shop towel. Components should be torqued in place while the sealant is still wet to the touch (within 10 minutes). The usage of a locating dowel is recommended during assembly to prevent smearing material off the location.

ENGINE 2.7L DOHC (Continued)

Mopar® Gasket Sealant in an aerosol can should be applied using a thin, even coat sprayed completely over both surfaces to be joined, and both sides of a gasket. Then proceed with assembly. Material in a can w/applicator can be brushed on evenly over the sealing surfaces. Material in an aerosol can should be used on engines with multi-layer steel gaskets.

STANDARD PROCEDURE - ENGINE GASKET SURFACE PREPARATION

To ensure engine gasket sealing, proper surface preparation must be performed, especially with the use of aluminum engine components and multi-layer steel cylinder head gaskets.

Never use the following to clean gasket surfaces:

- Metal scraper
- Abrasive pad or paper to clean cylinder block and head
- High speed power tool with an abrasive pad or a wire brush (Fig. 4)

NOTE: Multi-Layer Steel (MLS) head gaskets require a scratch free sealing surface.

Only use the following for cleaning gasket surfaces:

- Solvent or a commercially available gasket remover
- Plastic or wood scraper (Fig. 4)
- Drill motor with 3M Roloc™ Bristle Disc (white or yellow) (Fig. 4)

CAUTION: Excessive pressure or high RPM (beyond the recommended speed), can damage the sealing surfaces. The mild (white, 120 grit) bristle disc is recommended. If necessary, the medium (yellow, 80 grit) bristle disc may be used on cast iron surfaces with care.

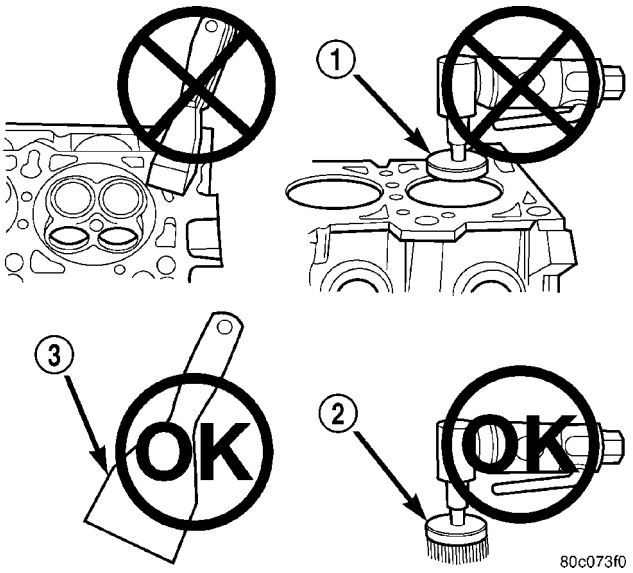

Fig. 4 Proper Tool Usage For Surface Preparation

1 - ABRASIVE PAD
2 - 3M ROLOC™ BRISTLE DISC
3 - PLASTIC/WOOD SCRAPER

STANDARD PROCEDURE - ENGINE CORE AND OIL GALLERY PLUGS

Using a blunt tool such as a drift and a hammer, strike the bottom edge of the cup plug. With the cup plug rotated, grasp firmly with pliers or other suitable tool and remove plug (Fig. 5).

CAUTION: Do not drive cup plug into the casting as restricted cooling can result and cause serious engine problems.

Thoroughly clean inside of cup plug hole in cylinder block or head. Be sure to remove old sealer. Lightly coat inside of cup plug hole with Mopar® Stud and Bearing Mount. Make certain the new plug is cleaned of all oil or grease. Using proper drive plug, drive plug into hole so that the sharp edge of the plug is at least 0.5 mm (0.020 in.) inside the lead-in chamfer.

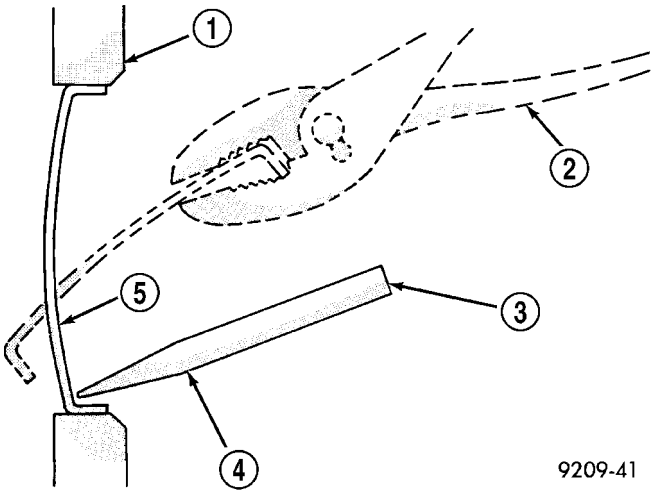

Fig. 5 Core Hole Plug Removal

1 - CYLINDER BLOCK
2 - REMOVE PLUG WITH PLIERS
3 - STRIKE HERE WITH HAMMER
4 - DRIFT PUNCH
5 - CUP PLUG

It is not necessary to wait for curing of the sealant. The cooling system can be refilled and the vehicle placed in service immediately.

REMOVAL - ENGINE ASSEMBLY

(1) Release fuel pressure(Refer to 14 - FUEL SYSTEM/FUEL DELIVERY - STANDARD PROCEDURE).

(2) Disconnect negative battery cable.

ENGINE 2.7L DOHC (Continued)

(3) Drain cooling system (Refer to 7 - COOLING/ENGINE - STANDARD PROCEDURE).

(4) Discharge A/C system using a suitable refrigerant recovery machine.

(5) Remove throttle body air inlet hose and air cleaner housing assembly.

(6) Raise vehicle on hoist.

(7) Remove both front wheels.

(8) Remove left and right splash shields.

(9) Remove fasteners attaching lower front fascia to crossmember.

(10) Remove fasteners attaching lower air shield to crossmember.

(11) Remove front bumper fascia.

(12) Lower vehicle.

(13) Remove upper radiator crossmember.

(14) Disconnect upper and lower radiator hoses at radiator.

(15) **Automatic Transmission Equipped Vehicles:**

- Using a blade or suitable hose cutter, cut transaxle oil cooler lines off flush with fittings. Plug lines and fittings to prevent debris from entering transaxle or cooler circuit. A service splice kit will be installed upon reassembly.
- Disconnect transmission electrical harness connectors (C104 & C105) (Refer to 8 - ELECTRICAL/CONNECTOR/GROUND LOCATIONS - DESCRIPTION).
- Disconnect transmission shift cable.

(16) **Manual Transmission Equipped Vehicles:**

- Disconnect transmission shift cables and remove from retaining bracket.
- Disconnect back up lamp switch connector.

(17) Disconnect A/C lines at condenser. Remove cooling module (fan, radiator, A/C condenser).

(18) Disconnect engine electrical harness from PCM and bulkhead connectors.

(19) Remove fasteners attaching ABS brake module to lower radiator crossmember. Support module with a suitable retaining strap.

(20) Disconnect brake line from retaining clips that attach to lower radiator crossmember.

(21) Raise vehicle.

(22) Remove both axle shafts (Refer to 3 - DIFFERENTIAL & DRIVELINE/HALF SHAFT - REMOVAL).

(23) Remove front engine mount through bolt. Remove front engine mount from lower radiator crossmember.

(24) Remove lower radiator crossmember.

(25) Remove accessory drive belts (Refer to 7 - COOLING/ACCESSORY DRIVE/DRIVE BELTS - REMOVAL).

(26) Remove power steering pump and bracket as an assembly. **Do not** disconnect power steering lines from pump. Reposition pump and support with suitable retaining strap.

(27) Disconnect heater return hose from pipe connection at right front frame rail area.

(28) Disconnect A/C compressor electrical connector.

(29) Remove A/C compressor mounting bolts. Reposition A/C compressor and support with suitable retaining strap. Generator can be removed with engine assembly.

(30) Remove structural collar (Refer to 9 - ENGINE/ENGINE BLOCK/STRUCTURAL COVER - REMOVAL).

(31) Remove the exhaust cross-under pipe (Refer to 11 - EXHAUST SYSTEM/CROSS-OVER PIPE - REMOVAL).

(32) Remove rear engine mount and transaxle bracket.

(33) Drain engine oil.

(34) **Automatic Transmission Equipped Vehicles:**

- Remove transaxle torque converter housing cover.
- Mark flex plate to torque converter position. Remove torque converter bolts.

(35) **Manual Transmission Equipped Vehicles:**

- Using Special Tool 6638, disconnect clutch hydraulic circuit quick connect fitting.
- Remove clutch/drive plate inspection cover.
- Mark flex plate to modular clutch position. Remove modular clutch assembly-to-drive plate bolts.

(36) Lower vehicle.

(37) Disconnect positive cable from battery and PDC.

(38) Disconnect ground cable from left side transaxle mount bracket.

(39) Disconnect throttle and speed control cables.

(40) Disconnect coolant pressure bottle coolant hose from engine coolant outlet connector.

(41) Disconnect heater hose from engine coolant outlet connector.

(42) Disconnect ground strap at right shock tower.

(43) Disconnect fuel line.

(44) Disconnect brake booster and vapor purge vacuum hoses.

(45) Disconnect all ground straps attaching to engine.

(46) Position vehicle height to allow engine dolly 6135 and cradle 6710 with posts 6848 to be installed under vehicle.

(47) Loosen cradle engine mounts to allow movement for positioning onto engine locating holes on the engine block, compressor mount bracket and oil pan rail. Lower vehicle and position cradle until the engine is resting on posts (Fig. 6). Tighten post mounts to cradle frame to prevent movement when

ENGINE 2.7L DOHC (Continued)

removing or installing engine/transaxle assembly. Secure engine/transaxle assembly to dolly/cradle with safety straps.

(48) Lower vehicle so weight of the engine and transmission ONLY is on the cradle.

(49) Remove right and left side engine mount bolts.

(50) Slowly raise vehicle in short length spans. Inspect at each interval for potential engine or transaxle contact to vehicle components. Move the cradle/dolly fixture as necessary to allow for removal clearance.

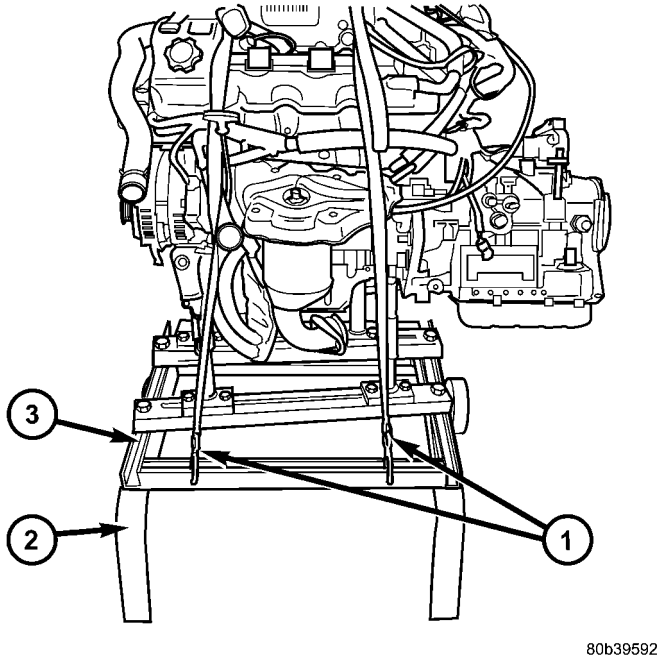

Fig. 6 ENGINE REMOVAL CRADLE

1 - SAFETY STRAPS
2 - SPECIAL TOOL 6135
3 - SPECIAL TOOL 6710

INSTALLATION - ENGINE ASSEMBLY

(1) Position engine/transaxle assembly under vehicle and slowly lower vehicle in short length spans. Inspect at each interval for potential engine or transaxle contact to vehicle components. Move the cradle/dolly fixture as necessary to allow for installation clearance (Fig. 6).

(2) Continue lowering vehicle until right side engine mount and left side transaxle mount align to their mounting locations. Install mounting bolts and torque to 61 N·m (45 ft. lbs.).

(3) Remove safety straps from engine/transaxle assembly. Slowly raise vehicle enough to remove the engine dolly and cradle.

(4) Reattach all ground straps to engine.

(5) Connect brake booster and vapor purge vacuum hoses.

(6) Connect fuel line.

(7) Connect ground strap to right shock tower.

(8) Connect heater hose to coolant outlet connector.

(9) Connect coolant pressure bottle coolant hose to coolant outlet connector.

(10) Connect throttle and speed control cables.

(11) Connect ground cable to left side transaxle mount bracket.

(12) Connect positive cable to battery and PDC.

(13) Raise vehicle.

(14) **Automatic Transmission Equipped Vehicles:**

- Install torque converter bolts.
- Install torque converter housing cover.

(15) **Manual Transmission Equipped Vehicles:**

- Install modular clutch assembly-to-drive plate bolts.
- Install clutch/drive plate inspection cover.
- Connect clutch hydraulic circuit quick connect fitting.

(16) Install rear engine mount and transaxle bracket.

(17) Install exhaust cross-under pipe (Refer to 11 - EXHAUST SYSTEM/CROSS-OVER PIPE - INSTALLATION).

(18) Install structural collar (Refer to 9 - ENGINE/ENGINE BLOCK/STRUCTURAL COVER - INSTALLATION).

(19) Install A/C compressor to bracket.

(20) Connect A/C compressor clutch electrical connector.

(21) Connect heater return hose to pipe connection at right front frame rail area.

(22) Install power steering pump and bracket assembly.

(23) Install accessory drive belts (Refer to 7 - COOLING/ACCESSORY DRIVE/DRIVE BELTS - INSTALLATION).

(24) Install lower radiator crossmember.

(25) Install front engine mount to lower radiator crossmember. Install front engine mount through bolt.

(26) Install both axle shafts (Refer to 3 - DIFFERENTIAL & DRIVELINE/HALF SHAFT - INSTALLATION).

(27) Lower vehicle.

(28) Connect brake line to retaining clips that attach to lower radiator crossmember.

(29) Install fasteners attaching ABS module to lower radiator crossmember.

(30) Connect engine electrical harness to PCM and bulkhead connectors.

(31) **Automatic Transmission Equipped Vehicles:**

- Connect transmission shift cable.

ENGINE 2.7L DOHC (Continued)

• Connect transmission electrical harness connectors (C104 & C105) (Refer to 8 - ELECTRICAL/CONNECTOR/GROUND LOCATIONS - DESCRIPTION).

• Connect transmission oil cooler lines using service splice kit. Refer to instructions provided with kit.

(32) **Manual Transmission Equipped Vehicles:**

• Connect transmission shift cables.

• Connect back up lamp switch connector.

(33) Install cooling module (fan, radiator, A/C condenser). Connect A/C lines to condenser.

(34) Connect upper and lower radiator hoses to radiator.

(35) Install upper radiator crossmember.

(36) Raise vehicle.

(37) Ensure oil pan drain plug is tight. Install new oil filter.

(38) Install front bumper fascia and lower air shield to lower radiator crossmember.

(39) Install left and right splash shields.

(40) Install both front wheels.

(41) Lower vehicle.

(42) Install throttle body air inlet hose and air cleaner housing assembly.

(43) Fill engine crankcase with proper oil to correct level.

(44) Evacuate and recharge Air Conditioning system (Refer to 24 - HEATING & AIR CONDITIONING - STANDARD PROCEDURE).

(45) Fill cooling system (Refer to 7 - COOLING/ENGINE - STANDARD PROCEDURE).

(46) Connect negative battery cable.

(47) Start engine and run until operating temperature is reached.

SPECIFICATIONS

2.7L ENGINE

DESCRIPTION	SPECIFICATION
General Specifications	
Type	60° DOHC V-6 24-Valve
Displacement	2.7 Liters (167 Cubic Inches)
Bore & Stroke	86.0 x 78.5 mm (3.386 in. x 3.091 in.)
Compression Ratio	9.67:1
Lead Cylinder	#1 Right Bank
Firing Order	1-2-3-4-5-6

DESCRIPTION	SPECIFICATION
Cylinder Block	
Cylinder Bore Diameter	86.0 mm ±0.0076 (3.3859 in. ±0.0003)
Out of Round (Max.)	0.076 mm (0.003 in.)
Taper (Max.)	0.051 mm (0.002 in.)
Pistons	
Material	Aluminum Alloy
Piston Diameter	85.983 mm ±0.019 (3.3851 in. ±0.0017)
Clearance at Size Location	– 0.0096 to +0.0436 mm (– 0.0003 to +0.0016 in.)
Piston Weight	316–326 grams (11.1466–11.4994 oz.)
Piston Ring Groove Diameter—No. 1	77.8–78 mm (3.063–3.070 in.)
Piston Ring Groove Diameter—No. 2	75.9–76.1 mm (2.988–2.996 in.)
Piston Ring Groove Diameter—No. 3	76.5–76.7 mm (3.011–3.019 in.)
Piston Pins	
Type	Full Floating
Pin Diameter	21.997–22.000 mm (0.8661–0.8662 in.)
Clearance in Piston	0.005–0.013 mm (0.0002–0.0005 in.)
Clearance in Rod	0.007–0.018 mm (0.0003–0.0008 in.)
Piston Rings	
Ring Gap—Top Compression Ring	0.20–0.36 mm (0.008–0.014 in.)
Ring Gap—2nd Compression Ring	0.37–0.63 mm (0.0146–0.0249 in.)
Ring Gap—Oil Control (Steel Rails)	0.25–0.76 mm (0.010–0.030 in.)

ENGINE 2.7L DOHC (Continued)

DESCRIPTION	SPECIFICATION
Piston Ring Side Clearance	
Compression Ring—Top	0.035–0.083 mm (0.0013–0.0032 in.)
Compression Ring—Second	0.040–0.080 mm (0.0016–0.0031 in.)
Oil Ring (Steel Rails)	0.058–0.204 mm (0.0022–0.0080 in.)
Piston Ring Width	
Compresion Rings—Top and Second	1.47–1.49 mm (0.0579–0.0587 in.)
Oil Ring (Steel Rails)	0.445–0.470 mm (0.0176–0.0186 in.)
Connecting Rods	
Bearing Clearance	0.024–0.064 mm (0.001–0.0026 in.)
Side Clearance	0.13–0.38 mm (0.0052–0.015 in.)
Side Clearance (Max.)	0.4318 mm (0.017 in.)
Piston Pin Bore Diameter	22.007–22.015 mm (0.8665–0.8668 in.)
Bearing Bore Out of Round (Max.)	0.004 mm (0.0002 in.)
Total Weight (Less Bearing)	529.9 ±7 grams (18.6917 ±0.247 oz.)
Crankshaft Main Bearing Journals	
Diameter	63.49–63.51 mm (2.4997–2.5004 in.)
Bearing Clearance	0.035–0.053 mm (0.0014–0.0021 in.)
Bearing Clearance (Max.)	0.087 mm (0.0034 in.)
Out of Round (Max.)	0.015 mm (0.0006 in.))
Taper (Max.)	0.015 mm (0.0006 in.)
End Play	0.0475–0.2725 mm (0.0019–0.0108 in.)
End Play (Max.)	0.43 mm (0.017 in.)

DESCRIPTION	SPECIFICATION
Connecting Rod Journals	
Diameter	53.51–53.49 mm (2.1067–2.106 in.)
Bearing Clearance	0.024–0.064 mm (0.001–0.0026 in.)
Out of Round (Max.)	0.015 mm (0.0006 in.)
Taper (Max.)	0.015 mm (0.0006 in.)
Camshaft	
Bore Diameter	24.050–24.071 mm (0.9469–0.09476 in.)
Bearing Journal Diameter	24.000–23.981 (0.9449–0.9441 in.)
Bearing Clearance	0.05–0.09 mm (0.0020–0.0035 in.)
Bearing Clearance (Max.)	0.13 mm (0.0051 in.)
End Play	0.13 mm (0.0051–0.0110 in.)
Valve Timing—Intake Valve	
Opens (ATDC)	2°
Closes (ABDC)	44°
Duration	222°
Valve Timing—Exhaust Valve	
Opens (BBDC)	36°
Closes (ATDC)	4°
Duration	220°
Valve Overlap	2°
Cylinder Head	
Gasket Thickness (Compressed)	1.50 mm ±0.05 (0.0591 in. ±0.002 in.)
Valve Seat Angle	45°–45.5°
Valve Seat Runout (Max.)	0.05 mm (0.002 in.)
Intake Valve Seat Width	1.00–1.5 mm (0.0394–0.0591 in.)
Exhaust Valve Seat Width	1.25–1.75 mm (0.0492–0.0689 in.)
Guide Bore Diameter (Std.)	5.975–6.00 mm (0.2353–0.2363 in.)

ENGINE 2.7L DOHC (Continued)

DESCRIPTION	SPECIFICATION
Valve Guide Height*—Intake & Exhaust	13.25–13.75 mm (0.5217–0.5414 in.)
*Measured from cylinder head surface to top of guide	
Valves	
Face Angle	44.5°–45.5°
Head Diameter—Intake	33.67–33.93 (1.3256–1.3358 in.)
Head Diameter—Exhaust	27.67–27.93 mm (1.0894–1.1000 in.)
Length—Intake (Overall)	107.89–108.39 mm (4.2476–4.2673 in.)
Length—Exhaust (Overall)	105.88–106.38 mm (4.1685–4.1882 in.)
Stem Diameter—Intake	5.934–5.952 mm (0.2337–0.2344 in.)
Stem Diameter—Exhaust	5.906–5.924 mm (0.2326–0.2333 in.)
Stem-to-Guide Clearance—Intake (New)	0.023–0.066 mm (0.0009–0.0026 in.)
Stem-to-Guide Clearance—Exhaust (New)	0.051–0.094 mm (0.002–0.0037 in.)
Stem-to-Guide Clearance—Intake (Max., Rocking Method)	0.29 mm (0.0114 in.)
Stem-to-Guide Clearance—Exhaust (Max., Rocking Method)	0.370 mm (0.0146 in.)
Valve Lift—Intake (Zero Lash)	9.0 mm (0.3543 in.)
Valve Lift—Exhaust (Zero Lash)	8.0 mm (0.3150 in.)
Valve Stem Tip Height—Intake	47.120 ±0.467 mm (1.8551 ±0.00184 in.)
Valve Stem Tip Height—Exhaust	48.672 ±0.467 mm (1.9162 ±0.00184 in.)
Valve Spring	
Free Length—Intake & Exhaust (Approx.)	45.63 mm (1.7965 in.)
Spring Force—Intake & Exhaust (Valve Closed)	249–284 N @ 38.0 mm (56.0–64.0 lbs. @ 1.4961 in.)
Spring Force—Intake (Valve Open)	658–721 N @ 29.0 mm (147.9–162.1 lbs. @ 1.1417 in.)

DESCRIPTION	SPECIFICATION
Spring Force—Exhaust (Valve Open)	614–671 N @ 30.0 mm (138.0–150.8 lbs. @ 1.1811 in.)
Number of Coils—Intake & Exhaust	7.35
Wire Diameter—Intake & Exhaust	3.861 mm (0.1520 in.)
Installed Height—Intake & Exhaust (Spring seat to bottom of retainer)	38.0 mm (1.4961 in.)
Oil Pump	
Clearance Over Rotors (Max.)	0.077 mm (0.003 in.)
Cover—Out-of-Flat (Max.)	0.025 mm (0.001 in.)
Inner & Outer Rotor Thickness	9.475–9.500 mm (0.3731–0.3741 in.)
Outer Rotor Clearance (Max.)	0.39 mm (0.015 in.)
Outer Rotor Diameter (Min.)	89.175 mm (3.5109 in.)
Tip Clearance Between Rotors (Max.)	0.20 mm (0.008 in.)
Oil Pressure	
(NOTE: At Normal Operating Temperatures)	
Pressure @ Curb Idle Speed*	34.7 kPa Min. (5 psi) Min.
Pressure @ 3000 RPM	300–724 kPa (45–105 psi)
*CAUTION: If oil pressure is zero at idle, DO NOT run engine at 3000 RPM.	

ENGINE 2.7L DOHC (Continued)

TORQUE

DESCRIPTION	N·m	Ft. Lbs.	In. Lbs.
A/C Compressor to Engine – Bolts	28	21	–
Camshaft Sprocket – Bolts	28	–	250
Camshaft Chain Tensioner (Secondary) – Bolts	12	–	105
Camshaft Bearing Cap – Bolts	12	–	105
Connecting Rod Cap – Bolts	27 +¼ Turn	20 +¼ Turn	–
Crankshaft Main Bearing Cap – Tie Bolts	28	–	250
Crankshaft Main Bearing Cap – Outer Cap Bolts	27 +¼ Turn	20 +¼ Turn	–
Crankshaft Main Bearing Cap – Inner Cap Bolts	20 +¼ Turn	15 +¼ Turn	–
Crankshaft Damper – Bolt	170	125	–
Cylinder Head – Bolts	(Refer to 9 - ENGINE/CYLINDER HEAD - INSTALLATION)		
Cylinder Head Cover – Bolts	12	–	105
Exhaust Manifold – Bolts	23	–	200
Exhaust Manifold Heat Shield – Bolts	12	–	105
Exhaust Manifold to Catalytic Converter V-Band Clamp	11	–	100
Engine Mount Bracket to Block – Bolts	61	45	–
Engine Mount Isolator – Nuts	61	45	–
Intake Manifold (Upper and Lower) – Bolts	12	–	105
Generator Bracket—Bolts	41	30	–
Oil Pan – Bolts	28	–	250
Oil Pan – Nuts	12	–	105
Oil Pan Drain – Plug	27	20	–
Oil Filter	16	12	–
Oil Pump to Block – Bolts	28	–	250
Oil Pump Cover – Bolts	12	–	105
Oil Pump Pick Up Tube – Bolt	28	–	250
PCV Valve	7	–	60
Crankshaft Rear Seal Retainer – Bolts	12	–	105
Spark Plugs	20	15	–
Starter Mounting – Bolts	41	30	–
Structural Collar	(Refer to 9 - ENGINE/ENGINE BLOCK/ STRUCTURAL COVER - INSTALLATION)		
Thermostat Housing/Water Inlet Connector – Bolts	12	–	105
Throttle Body – Bolts	12	–	105
Timing Chain Cover – M6 Bolts	12	–	105
Timing Chain Cover – M10 Bolts	54	40	–
Timing Chain Tensioner (Primary)	12	–	105
Timing Chain Guide Access Plug	20	15	–
Water Pump – Bolts	12	–	105
Cooling System Bleed Screw	12	–	110
Water Outlet Housing – Bolts	12	–	105

ENGINE 2.7L DOHC (Continued)

SPECIAL TOOLS

2.7L ENGINE

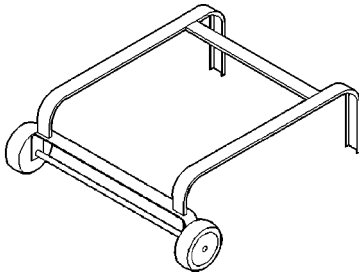

Dolly 6135

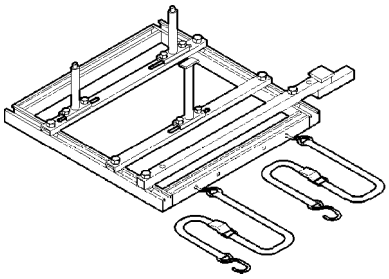

Cradle 6710

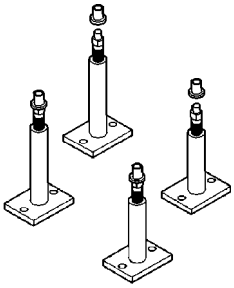

Post Kit Engine Cradle 6848

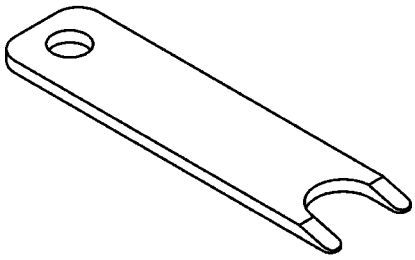

Disconnect Tool, 6638A

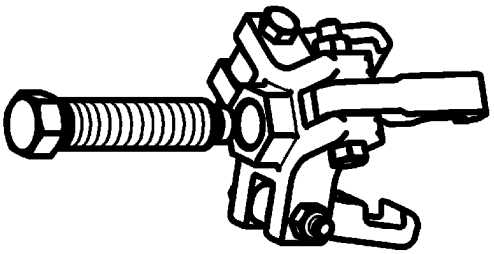

Puller 8454

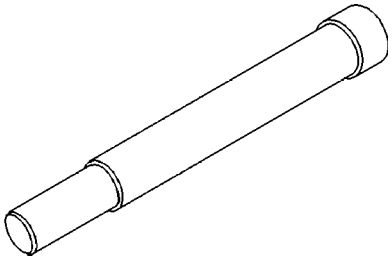

Crankshaft Damper Remover Insert 8194

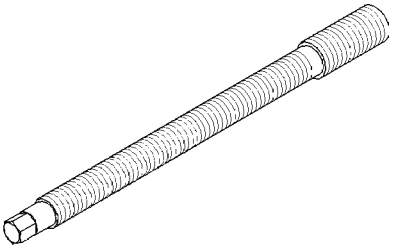

Crankshaft Damper Installer Screw 8179

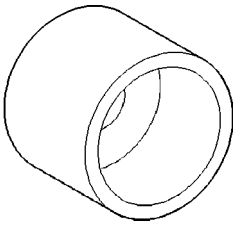

Crankshaft Damper Installer 6792-1

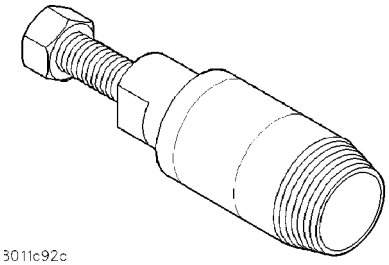

Crankshaft Seal Remover 6771

ENGINE 2.7L DOHC (Continued)

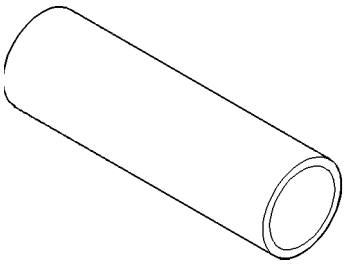

Crankshaft Seal & Sprocket Installer 6780-1

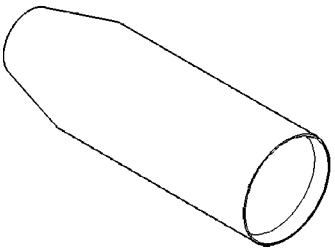

Crankshaft Seal Protector 6780-2

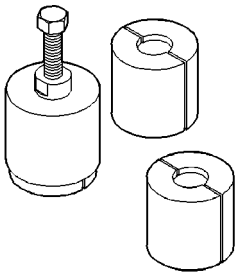

Puller 5048

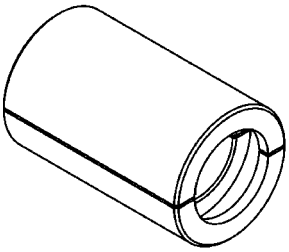

Puller Adaptor 8539

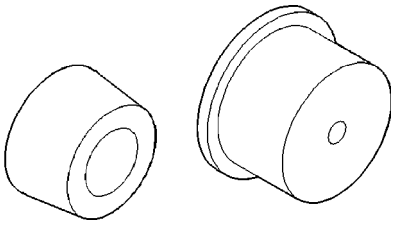

Crankshaft Rear Seal Guide 6926-1 & Installer 6926-2

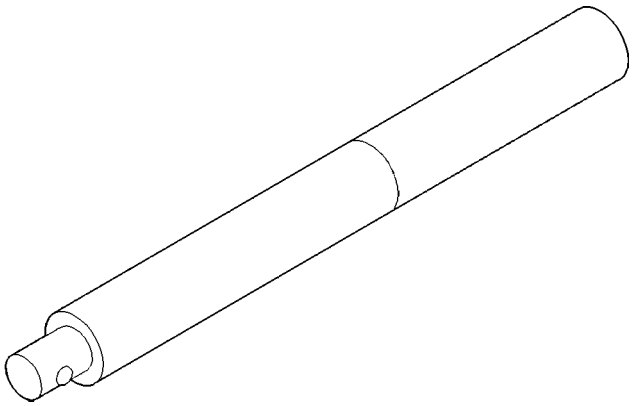

Driver Handle C-4171

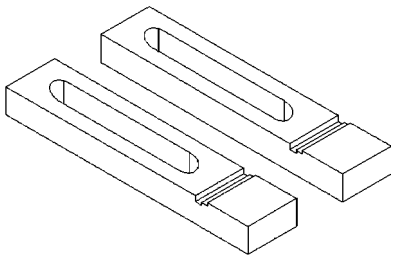

Crankshaft Real Seal Retainer Alignment Fixture 8225

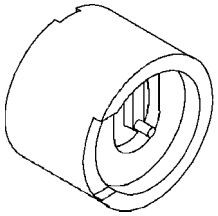

Timing Chain Tensioner Resetting Gauge 8186

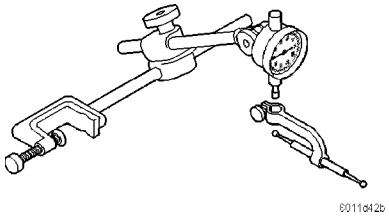

Dial Indicator C-3339

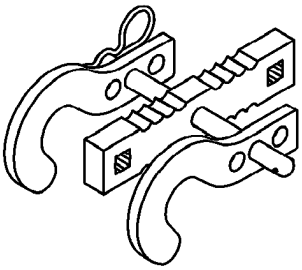

Valve Spring Compressor 8215-A

ENGINE 2.7L DOHC (Continued)

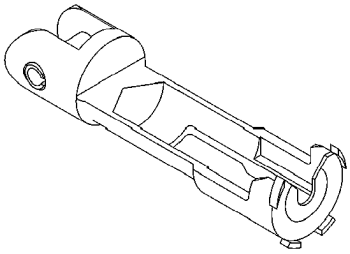

Adaptor 8216-A

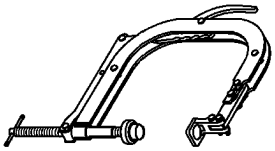

Valve Spring Compressor C-3422-D

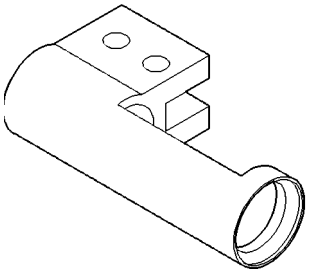

Valve Spring Adapter 6526

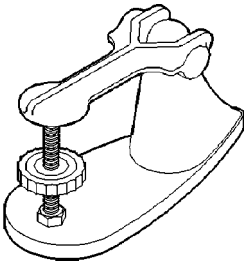

Valve Spring Tester C-647

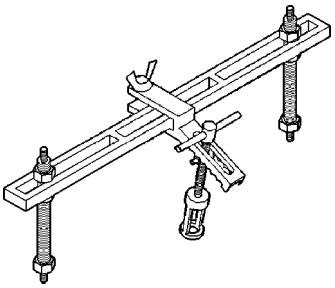

Valve Spring Compressor MD-998772-A

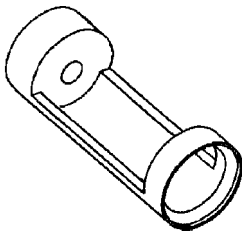

Valve Spring Adapter 6527

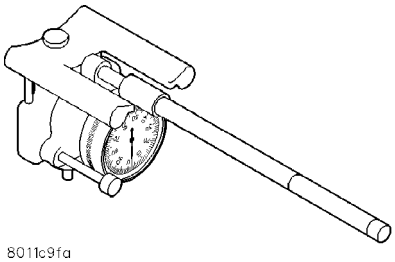

Indicator Bore Size C-119

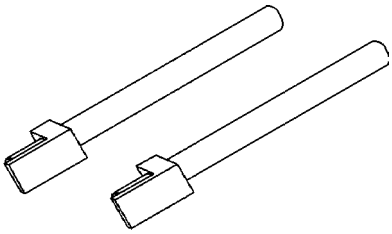

Connecting Rod Installation Guides 8189

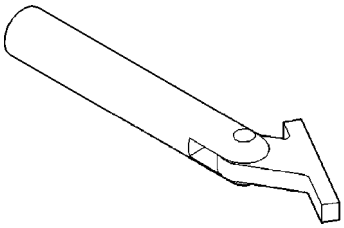

Main Bearing Remover/Installer C-3059

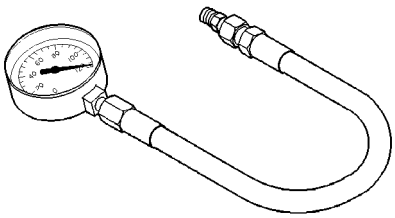

Pressure Gauge C-3292

ENGINE 2.7L DOHC (Continued)

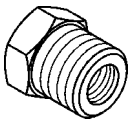

Adapter 8406

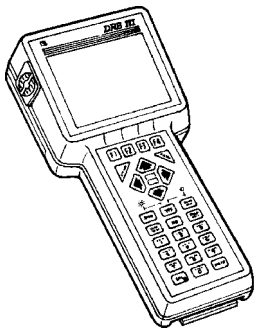

DRB III® with PEP Module – OT-CH6010A

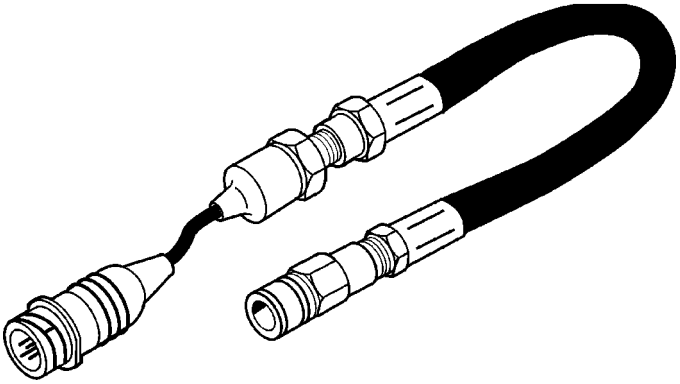

Pressure Transducer CH7059

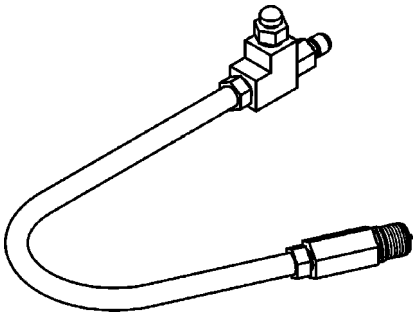

Adaptor 8116

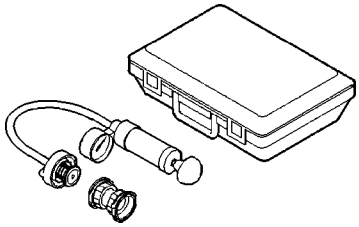

Cooling System Tester 7700

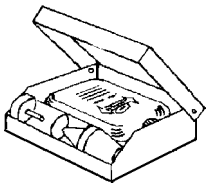

Combustion Leak Tester C-3685-A

AIR CLEANER ELEMENT

REMOVAL

(1) Disconnect negative battery cable.

(2) Disconnect inlet air temperature sensor electrical connector (Fig. 7).

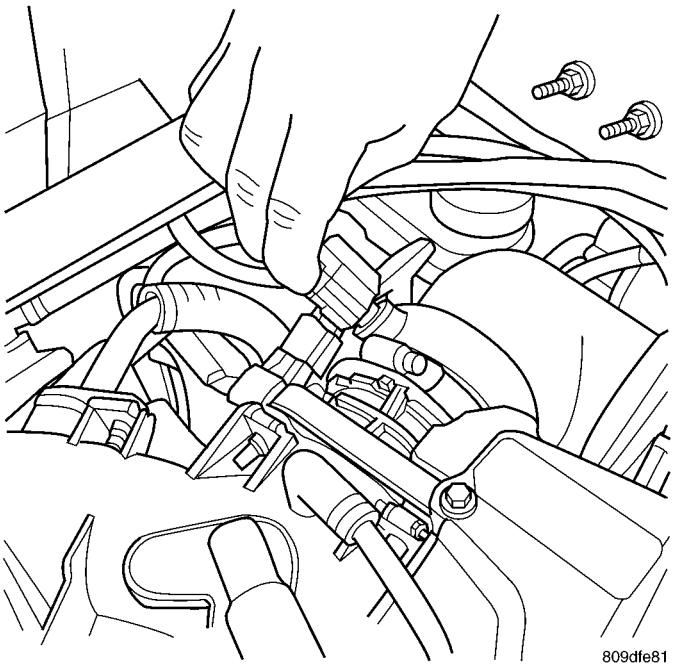

Fig. 7 INLET AIR TEMPERATURE SENSOR

(3) Disconnect fresh air makeup hose from throttle body air inlet hose (Fig. 8).

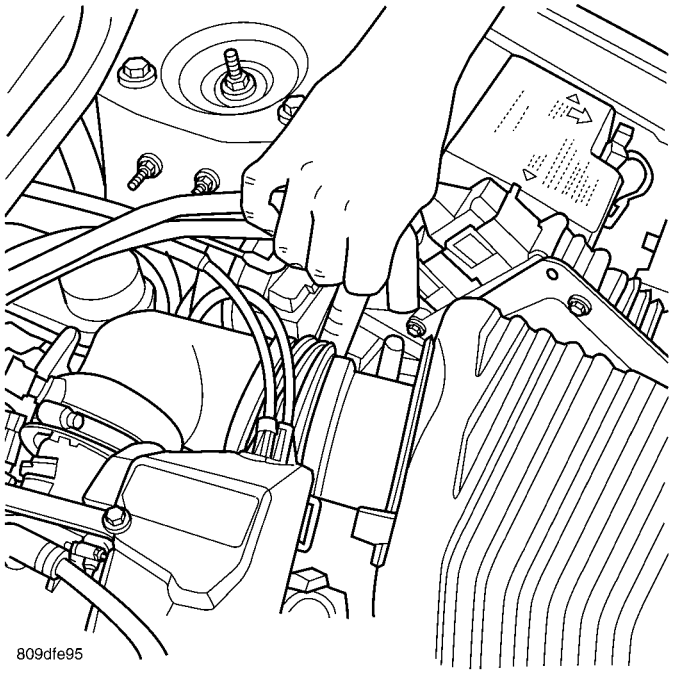

Fig. 8 MAKE UP AIR HOSE

(4) Loosen hose clamp at throttle body (Fig. 9). Remove hose from throttle body.

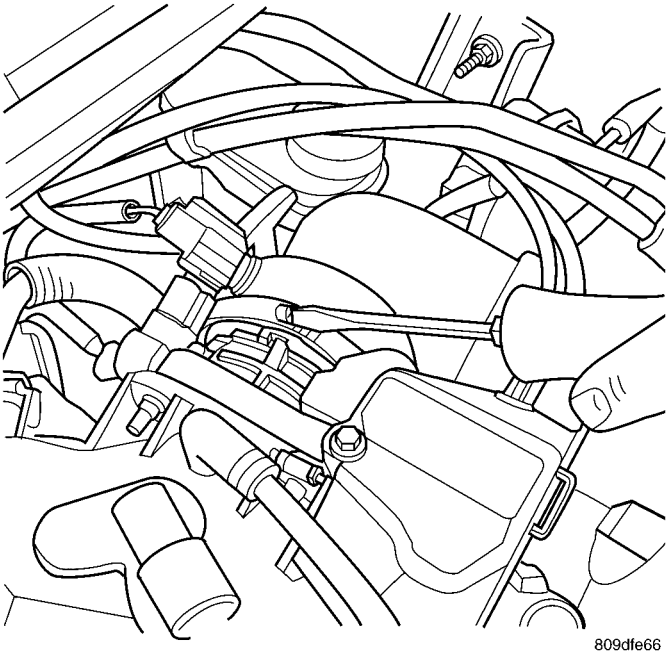

Fig. 9 HOSE CLAMP

(5) Push in on locking tabs to disengage air inlet hose from air cleaner housing. Pull air inlet hose out far enough to disengage air cleaner element from hose with screwdriver (Fig. 10).

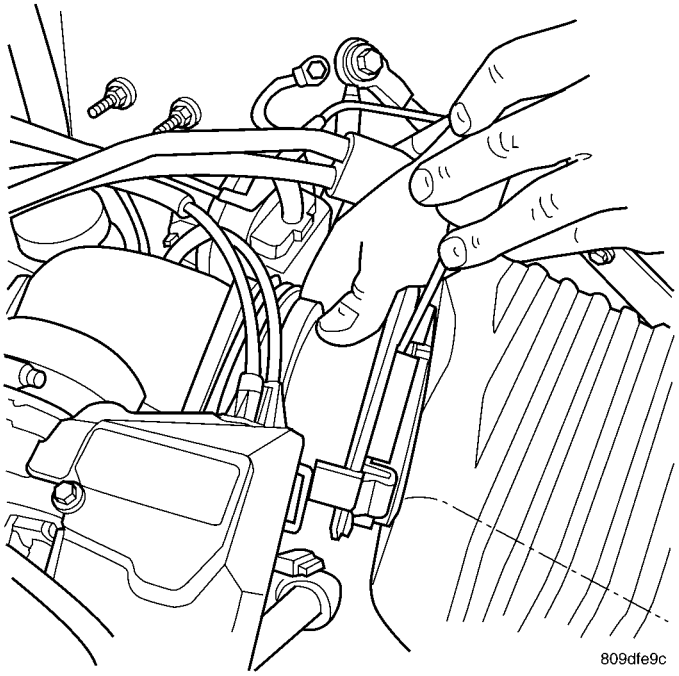

Fig. 10 AIR FILTER TO HOSE

(6) Remove throttle body air inlet hose.

(7) Remove air cleaner element from air cleaner housing.

AIR CLEANER ELEMENT (Continued)

INSTALLATION

(1) Clean any debris from inside air cleaner housing.

(2) Install air cleaner element into air cleaner housing (Fig. 11). Verify element rests properly on mounting bosses inside air cleaner housing.

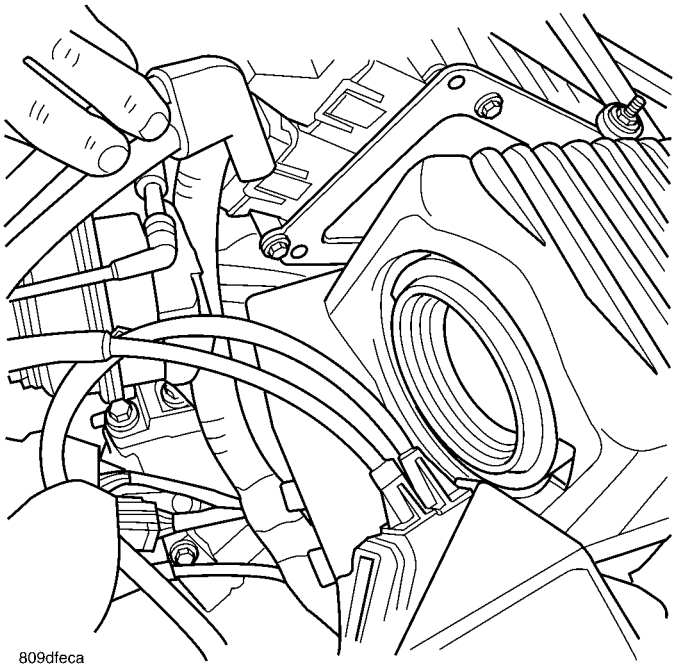

Fig. 11 AIR FILTER IN HOUSING

(3) Install throttle body air inlet hose into air cleaner housing. Push in on hose until an audible "click" is heard from locking tabs.

(4) Install hose on throttle body. Tighten hose clamp (Fig. 9).

(5) Connect fresh air makeup hose (Fig. 8).

(6) Connect inlet air temperature sensor electrical sensor (Fig. 7).

(7) Connect negative battery cable.

AIR CLEANER HOUSING

REMOVAL

(1) Disconnect negative battery cable.

(2) Disconnect inlet air temperature sensor electrical connector (Fig. 12).

(3) Disconnect fresh air makeup hose from throttle body air inlet hose (Fig. 13). Loosen clamp at throttle body (Fig. 14).

(4) Remove hose from throttle body.

(5) Remove nut on bracket that holds air cleaner housing.

(6) Pull air cleaner housing straight up off of locating pins.

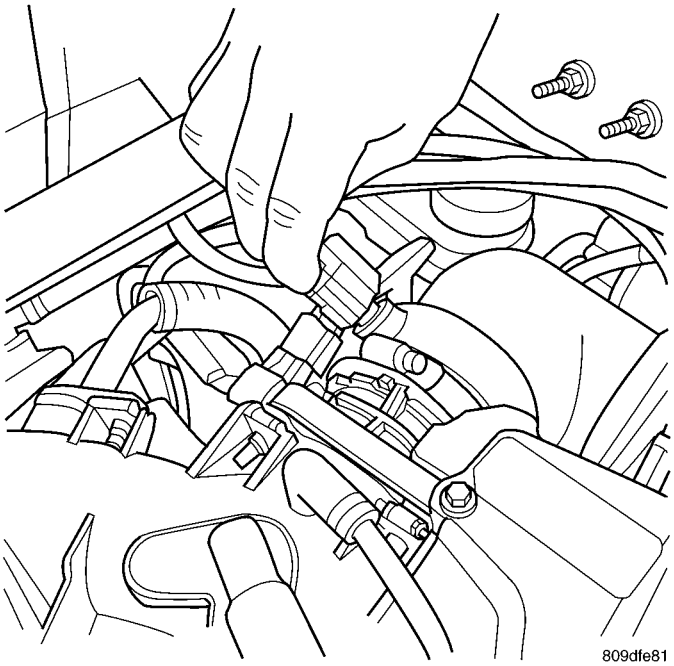

Fig. 12 INLET AIR TEMPERATURE SENSOR

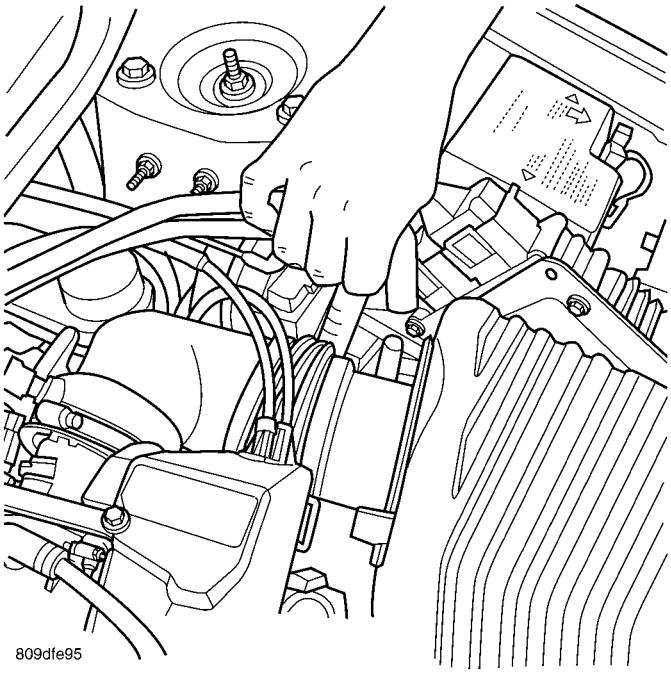

Fig. 13 MAKE UP AIR HOSE

INSTALLATION

(1) Install air cleaner housing straight down on locating pins.

(2) Install nut on bracket that holds air cleaner housing and tighten.

(3) Install throttle body air inlet hose to throttle body. Tighten hose clamp (Fig. 14).

(4) Connect fresh air makeup hose (Fig. 13).

AIR CLEANER HOUSING (Continued)

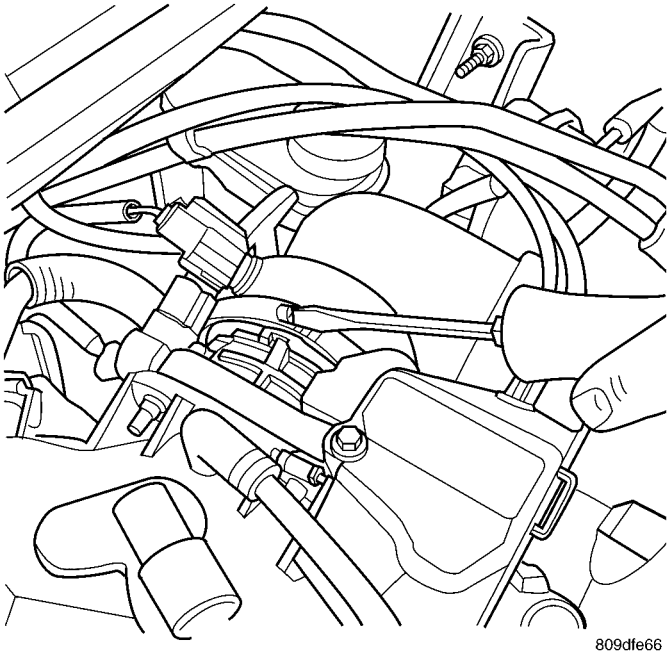

Fig. 14 HOSE CLAMP

(5) Connect inlet air temperature sensor electrical connector (Fig. 12).

(6) Connect negative battery cable.

CYLINDER HEAD

DESCRIPTION

The cylinder heads are made of an aluminum alloy (Fig. 15). The cylinder head features four valves per cylinder with pressed in powdered metal valve guides. The cylinder heads provide enclosures for the timing chain drive, necessitating a unique right and left cylinder head.

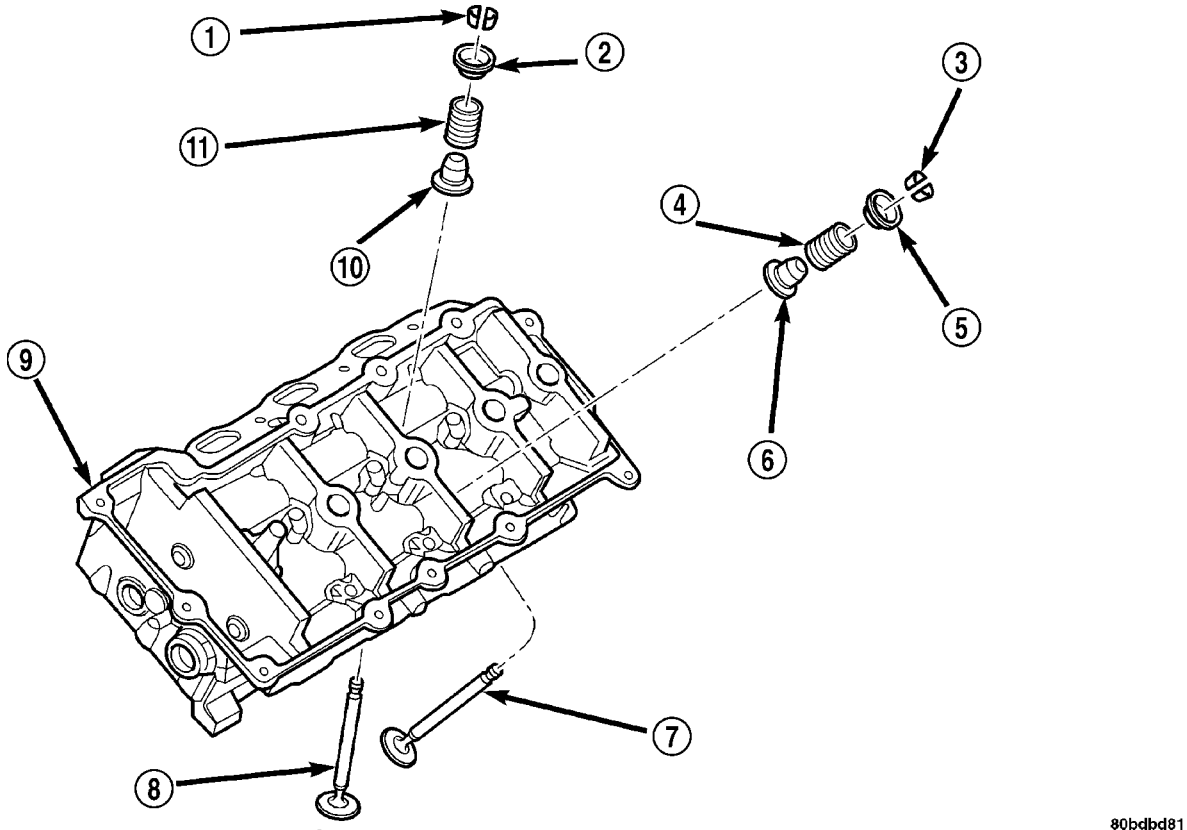

Fig. 15 CYLINDER HEAD, VALVES, & SPRINGS

1 - VALVE KEEPER
2 - SPRING RETAINER
3 - VALVE KEEPER
4 - VALVE SPRING-EXHAUST
5 - SPRING RETAINER
6 - VALVE STEM SEAL
7 - VALVE-EXHAUST
8 - VALVE-INTAKE
9 - CYLINDER HEAD
10 - VALVE STEM SEAL
11 - VALVE SPRING-INTAKE

CYLINDER HEAD (Continued)

DIAGNOSIS AND TESTING—CYLINDER HEAD GASKET

A cylinder head gasket leak can be located between adjacent cylinders or between a cylinder and the adjacent water jacket.

Possible indications of the cylinder head gasket leaking between adjacent cylinders are:

- Loss of engine power
- Engine misfiring
- Poor fuel economy

Possible indications of the cylinder head gasket leaking between a cylinder and an adjacent water jacket are:

- Engine overheating
- Loss of coolant
- Excessive steam (white smoke) emitting from exhaust
- Coolant foaming

CYLINDER-TO-CYLINDER LEAKAGE TEST

To determine if an engine cylinder head gasket is leaking between adjacent cylinders, follow the procedures in Cylinder Compression Pressure Test (Refer to 9 - ENGINE - DIAGNOSIS AND TESTING). An engine cylinder head gasket leaking between adjacent cylinders will result in approximately a 50–70% reduction in compression pressure.

CYLINDER-TO-WATER JACKET LEAKAGE TEST

WARNING: USE EXTREME CAUTION WHEN THE ENGINE IS OPERATING WITH COOLANT PRESSURE CAP REMOVED.

VISUAL TEST METHOD

With the engine cool, remove the coolant pressure cap. Start the engine and allow it to warm up until thermostat opens.

If a large combustion/compression pressure leak exists, bubbles will be visible in the coolant.

COOLING SYSTEM TESTER METHOD

WARNING: WITH COOLING SYSTEM TESTER IN PLACE, PRESSURE WILL BUILD UP FAST. EXCESSIVE PRESSURE BUILT UP, BY CONTINUOUS ENGINE OPERATION, MUST BE RELEASED TO A SAFE PRESSURE POINT. NEVER PERMIT PRESSURE TO EXCEED 138 kPa (20 psi).

Install Cooling System Tester 7700 or equivalent to pressure cap neck. Start the engine and observe the tester's pressure gauge. If gauge pulsates with every power stroke of a cylinder a combustion pressure leak is evident.

CHEMICAL TEST METHOD

Combustion leaks into the cooling system can also be checked by using Bloc-Chek Kit C-3685-A or equivalent. Perform test following the procedures supplied with the tool kit.

STANDARD PROCEDURE - Cylinder Head Oil Gallery Cup Plug Service

NOTE: DETERMINE WHICH CUP PLUG IS LEAKING BEFORE PERFORMING THIS PROCEDURE. IF NECESSARY, PERFORM AN ENGINE OIL LEAK DYE TEST.

Each cylinder head on a 2.7L engine has 6 external oil gallery cup plugs. It is not necessary to remove the original cup plug to install a new cup plug. The cup plug bore is deep enough to allow for two plugs. If it becomes necessary to service an oil gallery cup plug, perform the Repair Procedure.

NOTE: INSPECT THE CUP PLUG BORE IN QUESTION FOR THE PRESENCE OF TWO CUP PLUGS. IF THE CUP PLUG FLANGE IS JUST INSIDE (1–2 MM) THE CHAMFERED EDGE OF THE BORE TWO CUP PLUGS ARE ALREADY IN PLACE AND THE CYLINDER HEAD CANNOT BE REPAIRED.

Repair Procedure

(1) Remove component(s) necessary to gain access to the oil gallery cup plug requiring service.

NOTE: SOME OF THE OIL GALLERY CUP PLUGS ARE SERVICEABLE WITH THE HEAD INSTALLED ON THE ENGINE AND THE ENGINE IN THE VEHICLE, WHILE OTHERS REQUIRE REMOVING THE AFFECTED CYLINDER HEAD FROM THE ENGINE. IN EITHER CASE ONLY REPLACE THE CUP PLUG REQUIRING SERVICE.

(2) Clean the cup plug bore with brake cleaner and compressed air. It is not necessary to remove the existing cup plug.

(3) Lightly coat the new cup plug with sealer; p/n 04318083.

(4) Using an appropriate installation tool drive the new cup plug into the bore until the flanged edge of the plug is just inside (1-2 mm) the chamfered edge of the bore (Fig. 16).

(5) Allow the sealant to cure for at least 20 minutes.

(6) Assemble any components removed in step # 1 as necessary.

CYLINDER HEAD (Continued)

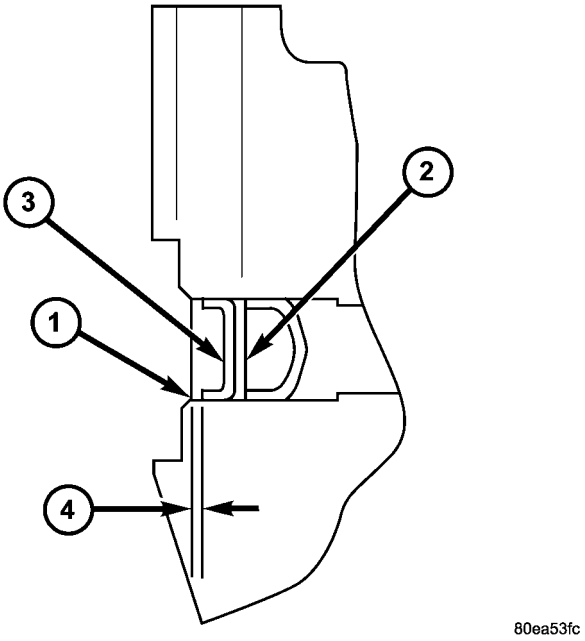

Fig. 16 Oil Gallery Cup Plug

1 – CUP PLUG BORE CHAMFER
2 – ORIGINAL CUP PLUG
3 – NEW CUP PLUG
4 – 1–2 mm

REMOVAL

(1) Perform fuel pressure release procedure **before attempting any repairs.** (Refer to 14 - FUEL SYSTEM/FUEL DELIVERY - STANDARD PROCEDURE)

(2) Disconnect negative cable from remote jumper terminal.

(3) Raise vehicle on hoist.

(4) Drain cooling system (Refer to 7 - COOLING/ENGINE - STANDARD PROCEDURE).

(5) Remove accessory drive belts (Refer to 7 - COOLING/ACCESSORY DRIVE/DRIVE BELTS - REMOVAL).

(6) Remove the vibration damper (Refer to 9 - ENGINE/ENGINE BLOCK/VIBRATION DAMPER - REMOVAL).

(7) Remove exhaust cross-under pipe (Refer to 11 - EXHAUST SYSTEM/CROSS-OVER PIPE - REMOVAL).

(8) Remove the appropriate catalytic converter (Refer to 11 - EXHAUST SYSTEM/CATALYTIC CONVERTER - REMOVAL).

(9) Remove oil pressure sensor heat shield. Disconnect oil pressure sensor connector.

(10) Lower vehicle.

(11) Remove upper and lower intake manifolds(Refer to 9 - ENGINE/MANIFOLDS/INTAKE MANIFOLD - REMOVAL).

(12) Remove cylinder head covers (Refer to 9 - ENGINE/CYLINDER HEAD/CYLINDER HEAD COVER(S) - REMOVAL).

(13) Disconnect camshaft position sensor and crankshaft position sensor connectors.

(14) Reposition engine wiring harness to left side of vehicle.

(15) Remove coolant outlet connector (Fig. 17) (Refer to 7 - COOLING/ENGINE/COOLANT OUTLET HOUSING - REMOVAL).

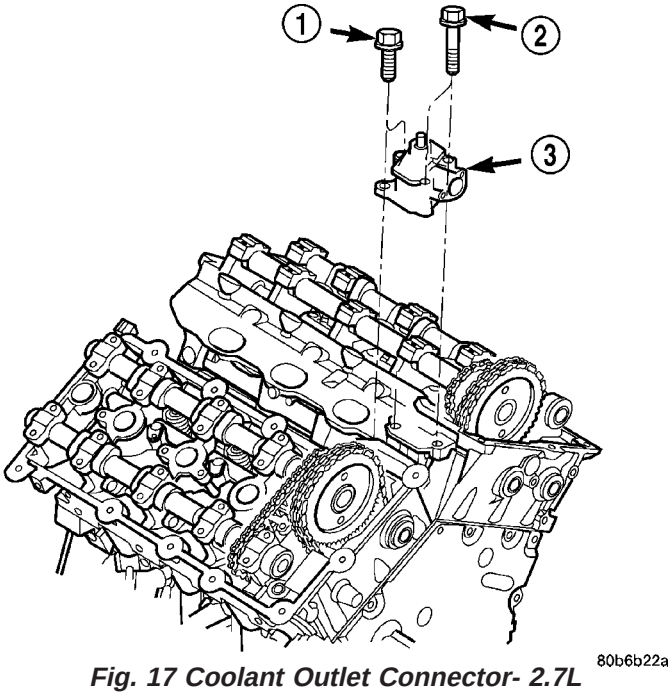

Fig. 17 Coolant Outlet Connector- 2.7L

1 - BOLT (2)
2 - BOLT (2)
3 - COOLANT OUTLET CONNECTOR

(16) Remove timing chain cover (Refer to 9 - ENGINE/VALVE TIMING/TIMING CHAIN COVER - REMOVAL).

(17) Rotate crankshaft until crankshaft sprocket timing mark aligns with timing mark on oil pump housing.

(18) Remove primary timing chain (Refer to 9 - ENGINE/VALVE TIMING/TIMING CHAIN AND SPROCKETS - REMOVAL).

(19) Remove upper primary timing chain guides.

(20) Remove camshaft bearing caps **gradually** in REVERSE sequence of installation (10–1) (Fig. 18).

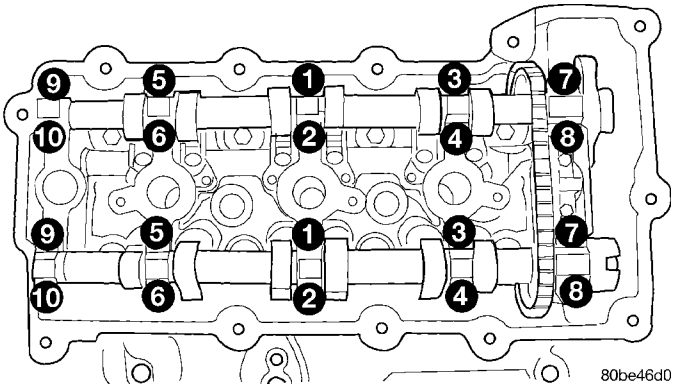

Fig. 18 Camshaft Bearing Caps

CYLINDER HEAD (Continued)

(21) Remove camshafts and valvetrain components from cylinder head (Fig. 19). Note component locations for re-installation in original locations.

(22) For left cylinder head removal:

- Remove fastener securing engine oil dipstick tube to cylinder head. Remove engine oil dipstick tube.
- Remove generator.

(23) For right cylinder head removal:

- Remove cylinder head ground strap.
- Disconnect EGR valve electrical connector (if equipped).

CAUTION: Ensure cylinder head bolts 11–9 (Fig. 20) are removed before attempting the removal of cylinder head, as damage to cylinder head and/or block may occur.

(24) Remove cylinder head bolts in reverse sequence of installation (Fig. 20) starting with bolts 11–9, then bolts 8–1.

(25) Remove cylinder head(s).

(26) Remove and discard cylinder head gasket.

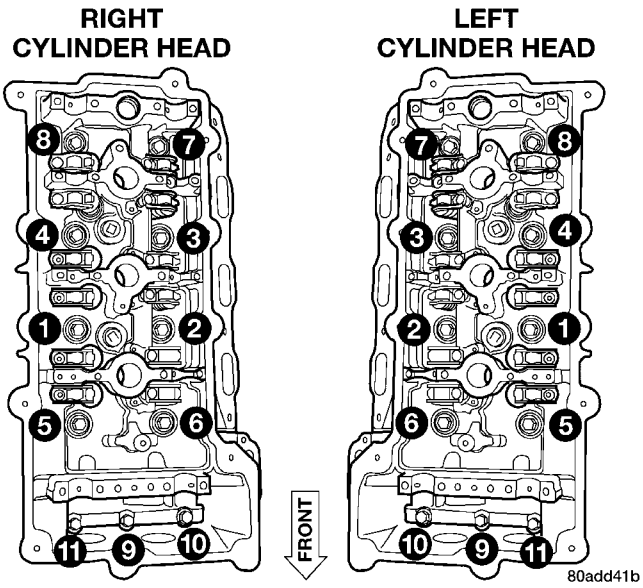

Fig. 20 CYLINDER HEAD BOLTS

(27) Clean cylinder head and block sealing surfaces. (Refer to 9 - ENGINE/CYLINDER HEAD - CLEANING)

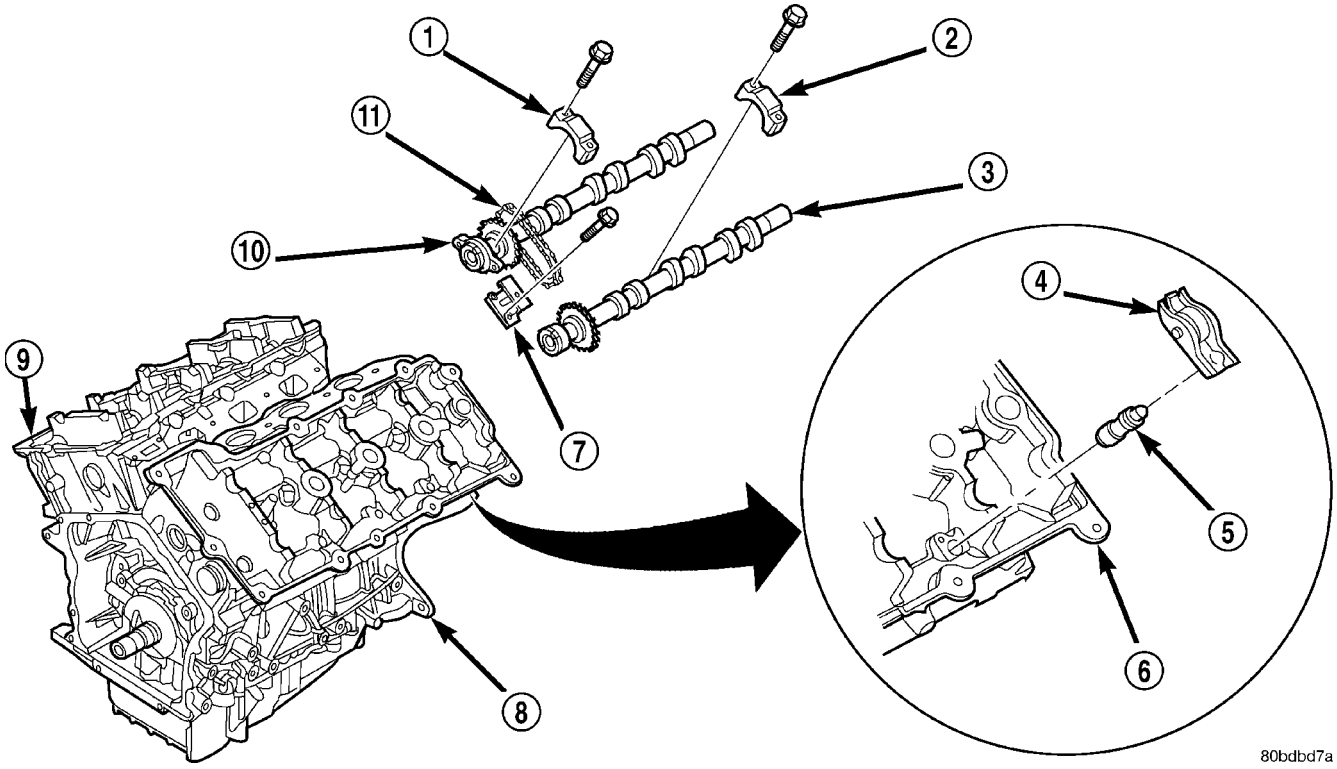

Fig. 19 Camshaft & Valvetrain Components

1 – CAMSHAFT BEARING CAP - INTAKE
2 – CAMSHAFT BEARING CAP - EXHAUST
3 – CAMSHAFT - EXHAUST
4 – ROCKER ARM
5 – HYDRAULIC LIFTER
6 – CYLINDER HEAD
7 – CAMSHAFT (SECONDARY) CHAIN TENSIONER
8 – CYLINDER BLOCK
9 – CYLINDER HEAD
10 – CAMSHAFT - INTAKE
11 – CAMSHAFT (SECONDARY) TIMING CHAIN

CYLINDER HEAD (Continued)

CLEANING

To ensure engine gasket sealing, proper surface preparation must be performed, especially with the use of aluminum engine components and multi-layer steel cylinder head gaskets.

NOTE: Multi-Layer Steel (MLS) head gaskets require a scratch free sealing surface.

Remove all gasket material from cylinder head and block (Refer to 9 - ENGINE - STANDARD PROCEDURE). Be careful not to gouge or scratch the aluminum head sealing surface.

Clean all engine oil passages.

INSPECTION

(1) Before cleaning, check for leaks, damage and cracks.

(2) Clean cylinder head and oil passages.

(3) Check cylinder head for flatness (Fig. 21).

(4) Cylinder head must be flat within:

- Standard dimension = less than 0.05 mm (0.002 inch.)
- Service Limit = 0.2 mm (0.008 inch.)
- Grinding Limit = Maximum of 0.2 mm (0.008 inch.) is permitted.

CAUTION: 0.20 mm (0.008 in.) MAX is a combined total dimension of the stock removal limit from cylinder head and block top surface (Deck) together.

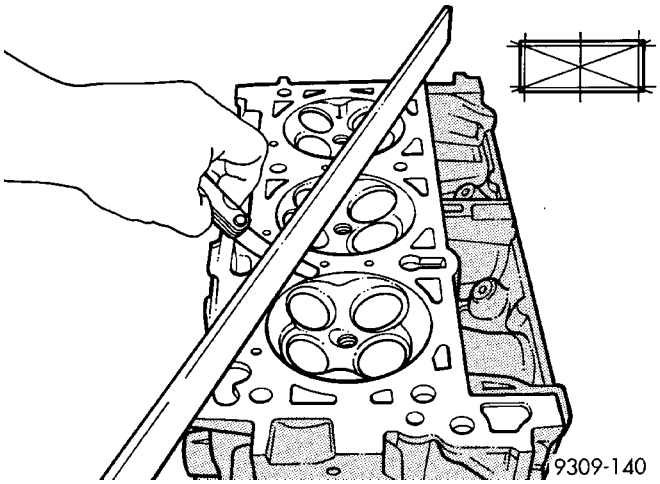

Fig. 21 Checking Cylinder Head Flatness—Typical

INSTALLATION

NOTE: The cylinder head bolts are tightened using a torque plus angle procedure. The bolts must be examined BEFORE reuse. If the threads are necked down the bolts must be replaced (Fig. 22)

Necking can be checked by holding a straight edge against the threads. If all the threads do not contact the scale, the bolt must be replaced (Fig. 22)

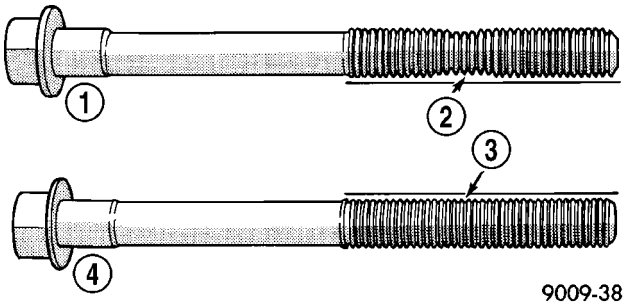

Fig. 22 Check for Stretched Bolts

1 - STRETCHED BOLT
2 - THREADS ARE NOT STRAIGHT ON LINE
3 - THREADS ARE STRAIGHT ON LINE
4 - UNSTRETCHED BOLT

CAUTION: When cleaning cylinder head and cylinder block surfaces, DO NOT use a metal scraper because the surfaces could be cut or ground. Use ONLY a wooden or plastic scraper.

(1) Clean sealing surfaces of cylinder head and block (Refer to 9 - ENGINE - STANDARD PROCEDURE GASKET SURFACE PREP).

(2) Install new head gasket over locating dowels.

(3) Install cylinder head to block, assuring head is properly positioned over locating dowels.

(4) Lubricate bolt threads with clean engine oil and install bolts.

(5) Tighten bolts in sequence shown in (Fig. 23), using the following steps and torque values:

- Step 1: Bolts 1–8 to 48 N·m (35 ft. lbs.)
- Step 2: Bolts 1–8 to 75 N·m (55 ft. lbs.)
- Step 3: Bolts 1–8 to 75 N·m (55 ft. lbs.)
- Step 4: Bolts 1–8 to +90° Turn **Do not use a torque wrench for this step.**
- Step 5: Bolts 9–11 to 28 N·m (250 in. lbs.)

CYLINDER HEAD (Continued)

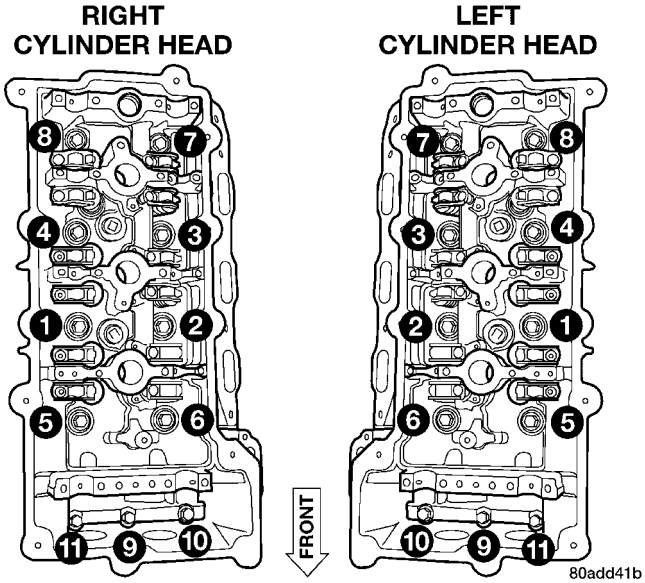

Fig. 23 Cylinder Head Tightening Sequence

(6) For left cylinder head installation:
- Install engine oil dipstick tube.
- Install generator.

(7) For right cylinder head removal:
- Install cylinder head ground strap.
- Connect EGR valve electrical connector (if equipped).

(8) Install all valvetrain components and camshafts (Refer to 9 - ENGINE/CYLINDER HEAD/CAMSHAFT(S) - INSTALLATION). Tighten camshaft bearing caps in sequence shown in (Fig. 24) to 12 N·m (105 in. lbs.).

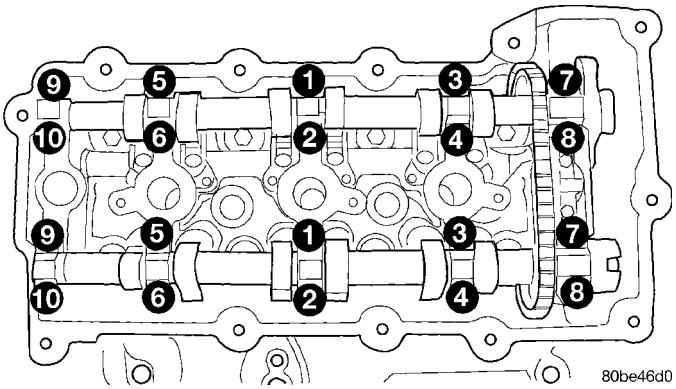

Fig. 24 Camshaft Bearing Cap Tightening Sequence

(9) Install primary timing chain, guides and sprockets (Refer to 9 - ENGINE/VALVE TIMING/TIMING CHAIN AND SPROCKETS - INSTALLATION).

(10) Install coolant outlet connector (Refer to 7 - COOLING/ENGINE/COOLANT OUTLET HOUSING - INSTALLATION).

(11) Install cylinder head covers (Refer to 9 - ENGINE/CYLINDER HEAD/CYLINDER HEAD COVER(S) - INSTALLATION).

(12) Connect camshaft position sensor and crankshaft position sensor connectors.

(13) Install timing chain cover (Refer to 9 - ENGINE/VALVE TIMING/TIMING CHAIN COVER(S) - INSTALLATION).

(14) Install crankshaft vibration damper (Refer to 9 - ENGINE/ENGINE BLOCK/VIBRATION DAMPER - INSTALLATION).

(15) Install lower and upper intake manifolds (Refer to 9 - ENGINE/MANIFOLDS/INTAKE MANIFOLD - INSTALLATION).

(16) Connect oil pressure sensor connector. Install oil pressure sensor heat shield.

(17) Install catalytic converter(s) (Refer to 11 - EXHAUST SYSTEM/CATALYTIC CONVERTER - INSTALLATION).

(18) Install exhaust cross-under pipe (Refer to 11 - EXHAUST SYSTEM/CROSS-OVER PIPE - INSTALLATION).

(19) Install accessory drive belts (Refer to 7 - COOLING/ACCESSORY DRIVE/DRIVE BELTS - INSTALLATION).

(20) Fill cooling system (Refer to 7 - COOLING/ENGINE - STANDARD PROCEDURE).

(21) Connect negative cable to remote jumper terminal.

CAMSHAFT(S)

DESCRIPTION

The assembled fabricated camshafts are composed of five bearing journals machined into a hollow steel tube (Fig. 25). Six steel lobes, a secondary timing drive sprocket, and a primary sprocket/thrust flange are pressed onto the camshaft tube using a unique assembly process. Camshaft end play is controlled by the primary camshaft sprocket attachment flange on the intake camshafts and by a thrust flange on the exhaust camshafts.

OPERATION

The camshaft has precisely machined (egg shaped) lobes to provide accurate valve timing and duration. The camshaft is driven by the crankshaft via drive sprockets and chains.

CAMSHAFT(S) (Continued)

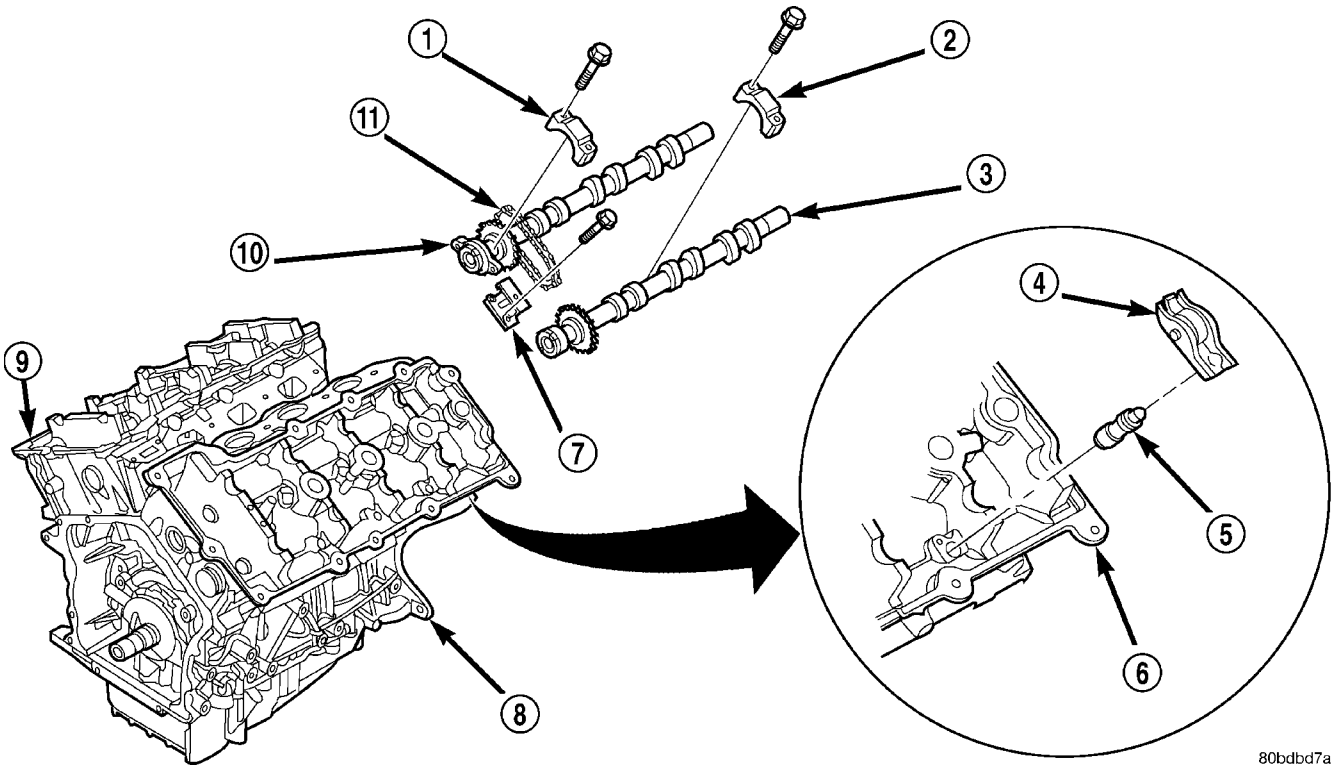

Fig. 25 Camshaft and Valvetrain Components

1 – CAMSHAFT BEARING CAP - INTAKE
2 – CAMSHAFT BEARING CAP - EXHAUST
3 – CAMSHAFT - EXHAUST
4 – ROCKER ARM
5 – HYDRAULIC LIFTER
6 – CYLINDER HEAD
7 – CAMSHAFT (SECONDARY) CHAIN TENSIONER
8 – CYLINDER BLOCK
9 – CYLINDER HEAD
10 – CAMSHAFT - INTAKE
11 – CAMSHAFT (SECONDARY) TIMING CHAIN

REMOVAL

(1) Remove the primary timing chain. (Refer to 9 - ENGINE/VALVE TIMING/TIMING BELT/CHAIN AND SPROCKETS - REMOVAL)

(2) Remove secondary chain tensioner mounting bolts.

NOTE: Camshaft bearing caps have been marked during engine manufacturing. For example, number one exhaust camshaft bearing is marked “1E>”

(3) Slowly loosen camshaft bearing cap bolts in reverse order of installation (Fig. 26).

(4) Remove camshaft bearing caps.

(5) Remove camshafts, secondary chain, and tensioner together as an assembly.

(6) Remove tensioner and camshaft chain from camshafts.

(7) Inspect camshafts. (Refer to 9 - ENGINE/CYLINDER HEAD/CAMSHAFT(S) - INSPECTION)

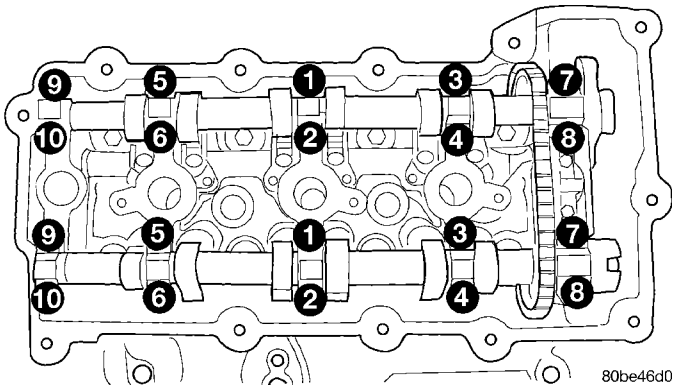

Fig. 26 Camshaft Bearing Cap Tightening Sequence

CAMSHAFT(S) (Continued)

INSPECTION

(1) Inspect camshaft bearing journals for damage and binding (Fig. 27). If journals are binding, check the cylinder head for damage. Also check cylinder head oil holes for clogging.

(2) Inspect camshaft sprockets for excessive wear. Replace camshafts if necessary.

(3) Check the cam lobe surfaces for abnormal wear and damage. Replace camshaft if defective. Measure the actual wear (Fig. 27)and replace, if out of limits—standard value is 0.0254 mm (0.001 in.); wear **limit** is 0.254 mm (0.010 in.).

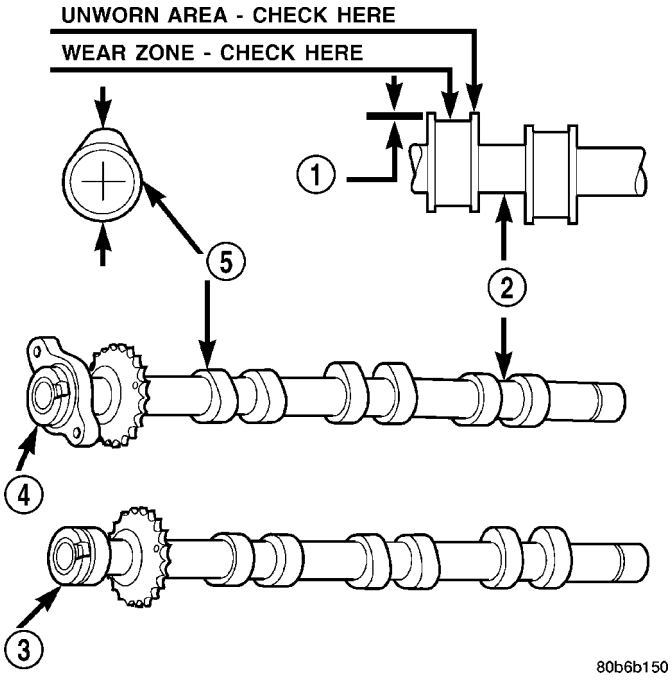

Fig. 27 Camshaft Inspection

1 - ACTUAL WEAR
2 - BEARING JOURNAL
3 - EXHAUST CAMSHAFT
4 - INTAKE CAMSHAFT
5 - LOBE

INSTALLATION

CAUTION: When the timing chain is removed and the cylinder heads are installed, DO NOT rotate the camshafts or crankshaft without first locating the proper crankshaft position. Failure to do so will result in valve and/or piston damage.

(1) Assemble camshaft chain on the cams. Ensure that plated links are facing toward the front. Align the plated links to the dot on the camshaft sprockets (Fig. 29).

(2) If camshaft chain tensioner is already in the compressed and locked position, proceed to step (4).

(3) When the camshaft chain tensioner is removed, it is necessary to compress and lock the tensioner using the following procedures:

(a) Place tensioner into a soft jaw vise (Fig. 28).

(b) SLOWLY compress tensioner until fabricated lock pin or the equivalent can be inserted into the locking holes.

(c) Remove compressed and locked tensioner from the vise.

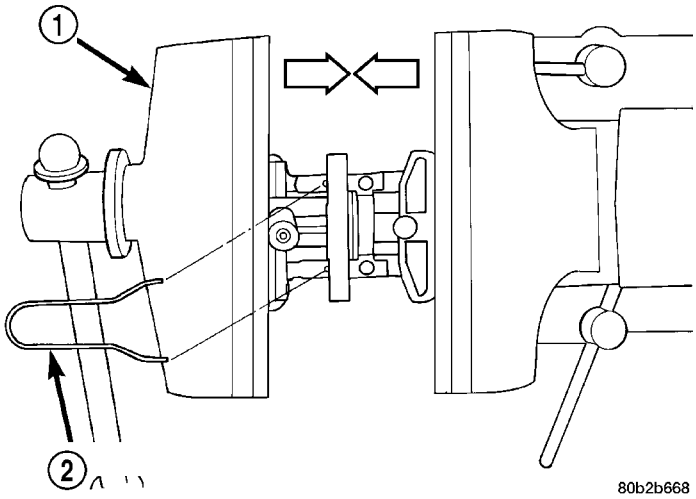

Fig. 28 Locking Camshaft (Secondary) Chain Tensioner

1 - VISE
2 - LOCK PIN

CAMSHAFT(S) (Continued)

(4) Insert the compressed and locked camshaft chain tensioner in-between the camshafts and chain.

(5) Rotate the cams so that the plated links and dots are facing the 12:00 O'clock position (Fig. 29).

(6) Install cams to cylinder head. Ensure that rocker arms are correctly seated and in proper positions.

(7) Install camshaft bearing caps. Ensure that bearing caps are installed in same position as removed.

(8) Tighten cam bearing cap bolts gradually in sequence shown in (Fig. 26) to 12 N·m (105 in. lbs.).

(9) Install secondary chain tensioner bolts and tighten to 12 N·m (105 in. lbs.).

(10) Remove locking pin from secondary tensioners.

(11) Measure camshafts end play. (Refer to 9 - ENGINE/CYLINDER HEAD/CAMSHAFT(S) - STANDARD PROCEDURE)

(12) Install the primary timing chain. (Refer to 9 - ENGINE/VALVE TIMING/TIMING BELT/CHAIN AND SPROCKETS - INSTALLATION)

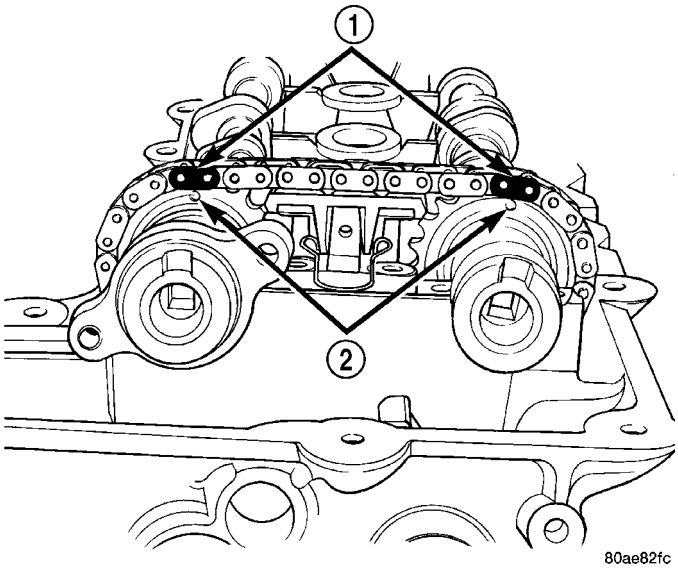

Fig. 29 Camshaft Chain Timing

1 - PLATED CHAIN LINKS
2 - CAMSHAFT TIMING MARKS (DOTS)

CYLINDER HEAD COVER - LEFT

REMOVAL

(1) Disconnect negative battery cable.

(2) Remove upper intake manifold (Refer to 9 - ENGINE/MANIFOLDS/INTAKE MANIFOLD - REMOVAL).

(3) Disconnect electrical connectors from ignition coils and capacitor. Reposition electrical harness.

(4) Remove ground strap from cylinder head cover stud.

(5) Disconnect electrical harness retaining clips from cylinder head cover studs. Reposition electrical harness.

(6) Remove fastener attaching ignition coil capacitor.

(7) Remove ignition coils.

(8) Loosen all cylinder head cover fasteners (Fig. 30).

NOTE: Cylinder head cover attaching bolts are captured to the cover.

CAUTION: Make certain the double ended studs in the center of the cylinder head cover are loose before attempting to remove cover (Fig. 30).

(9) Remove cylinder head cover.

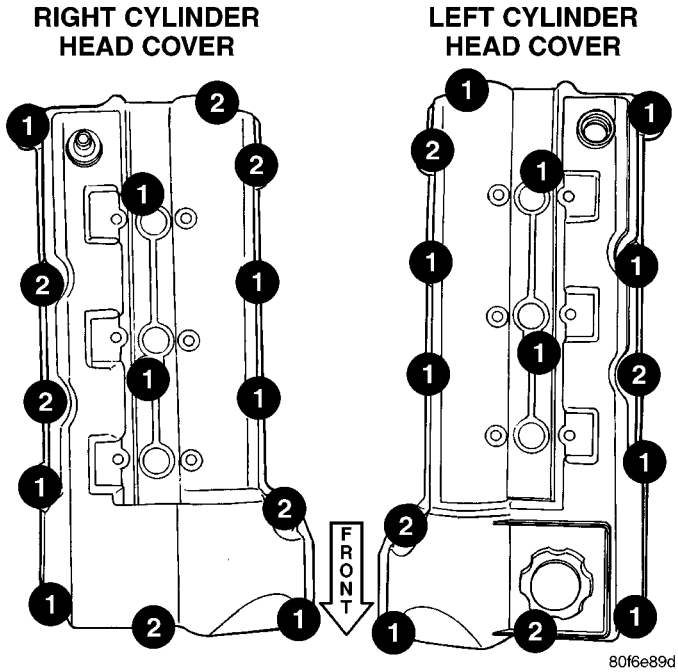

Fig. 30 Cylinder Head Cover Fasteners

1 - DOUBLE ENDED STUDS
2 - BOLTS

INSTALLATION

(1) Clean cylinder head cover and both sealing surfaces. Inspect and replace gaskets as necessary (Fig. 31).

(2) Install cylinder head cover and hand start all fasteners. Verify that all double-ended studs are in the correct locations as shown in (Fig. 30).

(3) Tighten cylinder head cover attaching bolts and double-ended studs to 12 N·m (105 in. lbs.).

(4) Install ignition coils.

CYLINDER HEAD COVER - LEFT (Continued)

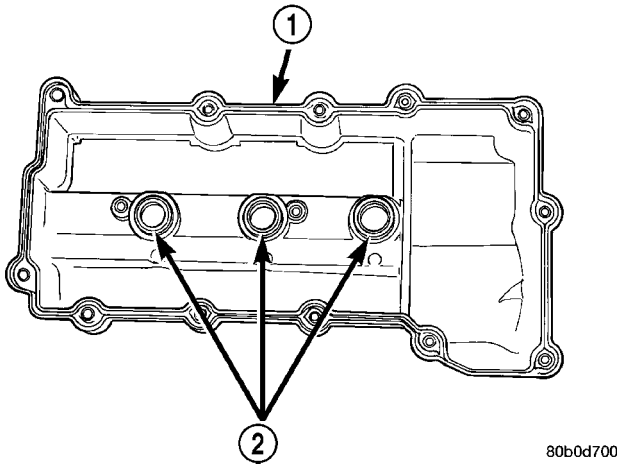

Fig. 31 Cylinder Head Cover Gasket and Spark Plug Seals

1 - ONE PIECE GASKET
2 - SPARK PLUG WELL SEALS

(5) Install ignition coil capacitor and fastener.

(6) Connect all electrical connectors and harness clips.

(7) Install ground strap to cylinder head cover stud.

(8) Install upper intake manifold (Refer to 9 - ENGINE/MANIFOLDS/INTAKE MANIFOLD - INSTALLATION).

(9) Connect negative battery cable.

CYLINDER HEAD COVER - RIGHT

REMOVAL

(1) Disconnect negative battery cable.

(2) Remove upper intake manifold (Refer to 9 - ENGINE/MANIFOLDS/INTAKE MANIFOLD - REMOVAL).

(3) Disconnect electrical connectors from ignition coils and capacitor. Reposition electrical harness.

(4) Remove make up air hose from cylinder head cover grommet.

(5) Remove ground strap from cylinder head cover stud.

(6) Disconnect electrical harness retaining clips from cylinder head cover studs. Reposition electrical harness.

(7) Remove fastener attaching ignition coil capacitor.

(8) Remove ignition coils.

(9) Loosen all cylinder head cover fasteners (Fig. 30).

NOTE: Cylinder head cover attaching bolts are captured to the cover.

CAUTION: Make certain the double ended studs in the center of the cylinder head cover are loose before attempting to remove cover (Fig. 30).

(10) Remove cylinder head cover.

INSTALLATION

(1) Clean cylinder head cover and both sealing surfaces. Inspect and replace gaskets as necessary (Fig. 31).

(2) Install cylinder head cover and hand start all fasteners. Verify that all double-ended studs are in the correct locations as shown in (Fig. 30).

(3) Tighten cylinder head cover attaching bolts and double-ended studs to 12 N·m (105 in. lbs.).

(4) Install ignition coils.

(5) Install ignition coil capacitor and fastener.

(6) Connect ground strap to cylinder head cover stud.

(7) Connect make up air hose to cylinder head cover grommet.

(8) Connect all electrical connectors and harness clips.

(9) Install upper intake manifold (Refer to 9 - ENGINE/MANIFOLDS/INTAKE MANIFOLD - INSTALLATION).

INTAKE/EXHAUST VALVES & SEATS

DESCRIPTION

The valves are made of heat resistant steel, and have chrome plated stems to prevent scuffing (Fig. 15). The four valves per cylinder (two intake and two exhaust) are actuated by roller rocker arms, which pivot on stationary lash adjusters. All valves use three bead lock keepers to retain springs and to promote valve rotation.

STANDARD PROCEDURE - VALVE AND VALVE SEAT REFACING

The intake and exhaust valves have a 44.5 to 45 degree face angle. The valve seats have a 45 to 45.5 degree face angle. The valve face and valve seat angles are shown in (Fig. 32).

VALVES

Inspect the remaining margin after the valves are refaced. (Refer to 9 - ENGINE - SPECIFICATIONS)

VALVE SEATS

(1) When refacing valve seats, it is important that the correct size valve guide pilot be used for reseating stones. A true and complete surface must be obtained.

INTAKE/EXHAUST VALVES & SEATS (Continued)

(2) Measure the concentricity of valve seat using dial indicator. Total runout should not exceed 0.051 mm (0.002 inch.) total indicator reading.

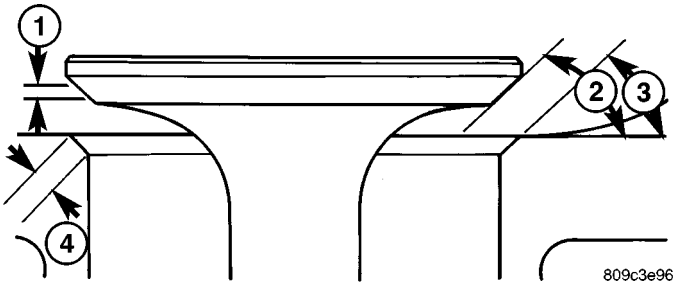

Fig. 32 Valve Face and Seat

1 - SEAT WIDTH
2 - FACE ANGLE
3 - SEAT ANGLE
4 - SEAT CONTACT AREA

(3) Inspect the valve seat with Prussian blue to determine where the valve contacts the seat. To do this, coat valve seat **LIGHTLY**with Prussian blue then set valve in place. Rotate the valve with light pressure. If the blue is transferred to the center of valve face, contact is satisfactory. If the blue is transferred to top edge of valve face, then lower valve seat with a 15 degree stone. If the blue is transferred to the bottom edge of valve face, then raise valve seat with a 65 degree stone.

NOTE: Valve seats which are worn or burned can be reworked, provided that correct angle and seat width are maintained. Otherwise cylinder head must be replaced.

(4) When seat is properly positioned the width of the intake 1.00 to 1.50 mm (0.0394 to 0.0591 in.) and exhaust seats should be 1.25 to 1.75 mm (0.049 to 0.069 in.) (Fig. 32).

(5) Check the valve spring installed height after refacing the valve and seat (Fig. 33).

VALVE AND SPRING INSTALLED HEIGHT

(1) Coat valve stems with clean engine oil and insert them in cylinder head.

(2) If valves or seats have been refaced, check valve tip height (A) (Fig. 33). If valve tip height for intake valve is greater than 47.59 (1.8737 in.) or 49.14 (1.9347 in.) for exhaust valve, grind valve tip until within specifications. Make sure measurement is taken from cylinder head surface to the top of valve stem.

(3) Install valve seal/spring seat assembly over valve guides on all valve stems (Fig. 34). Ensure that the garter spring is intact around the top of the rubber seal.

(4) Position valve springs and retainer on spring seat (Fig. 34).

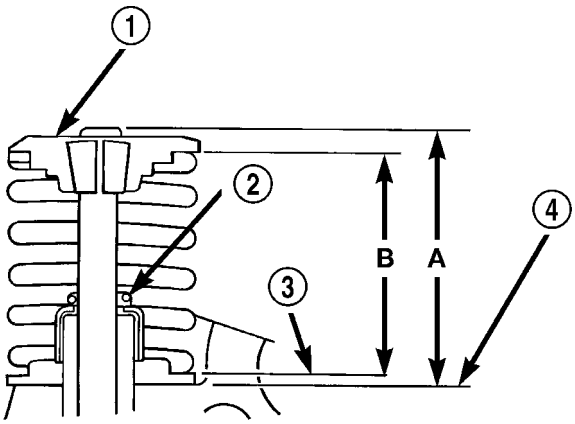

Fig. 33 Checking Valve Tip Height and Valve

1 - SPRING RETAINER
2 - GARTER SPRING
3 - VALVE SPRING SEAT TOP
4 - CYLINDER HEAD SURFACE

(5) Compress valve spring with a valve spring compressor.

(6) Install retainer locks and release tool.

(7) If valves and/or seats are refaced, measure the installed height of springs (B) (Fig. 33). Measurement is taken from top of spring seat to the bottom surface of spring retainer. If height is greater than 38.75 mm (1.5256 in.), install a 0.762 mm (0.030 in.) spacer in head counterbore under the valve spring seat to bring spring height back within specification.

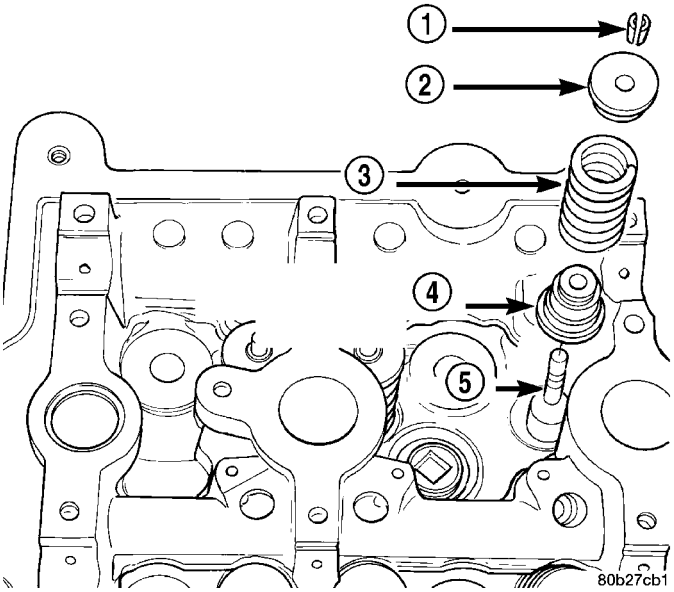

Fig. 34 Valve Seal and Spring

1 - VALVE RETAINING LOCKS
2 - VALVE SPRING RETAINER
3 - VALVE SPRING
4 - VALVE SEAL AND VALVE SPRING SEAT ASSEMBLY
5 - VALVE

INTAKE/EXHAUST VALVES & SEATS (Continued)

REMOVAL

(1) Remove cylinder head(s). (Refer to 9 - ENGINE/CYLINDER HEAD - REMOVAL)

(2) Remove valve spring. (Refer to 9 - ENGINE/CYLINDER HEAD/VALVE SPRINGS - REMOVAL)

(3) Before removing valves, **remove any burrs from valve stem lock grooves to prevent damage to the valve guides.**

(4) Remove valve. Identify each valve to ensure installation in original location.

INSPECTION

VALVES

(1) Clean and inspect valves thoroughly. Replace burned, warped and cracked valves.

(2) Measure valve stems for wear (Fig. 35). For valve specifications, (Refer to 9 - ENGINE - SPECIFICATIONS).

NOTE: Valve stems are chrome plated and should not be polished (Fig. 35).

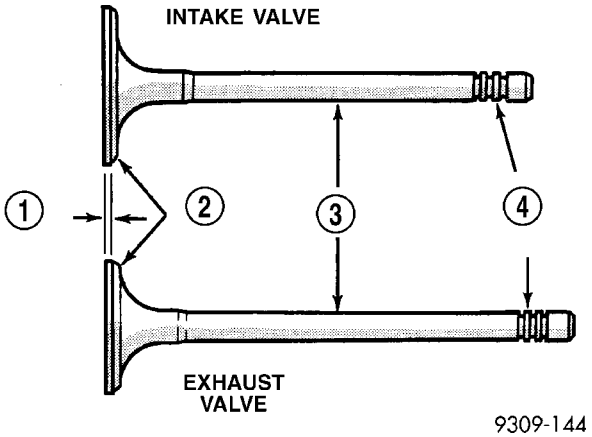

Fig. 35 Intake and Exhaust Valves

1 - MARGIN
2 - FACE
3 - STEM
4 - VALVE SPRING RETAINER LOCK GROOVES

VALVE GUIDES

(1) Remove carbon and varnish deposits from inside of valve guides with a reliable guide cleaner.

(2) Measure valve stem-to-guide clearance as follows:

(3) Install valve into cylinder head so it is 15 mm (0.590 inch.) off the valve seat. A small piece of hose may be used to hold valve in place.

(4) Attach dial indicator Tool C-3339 to cylinder head and set it at right angle of valve stem being measured (Fig. 36).

(5) Move valve to and from the indicator. For clerance specifications, (Refer to 9 - ENGINE - SPECIFICATIONS).

NOTE: Replace cylinder head if stem-to-guide clearance exceeds specifications, or if guide is loose in cylinder head.

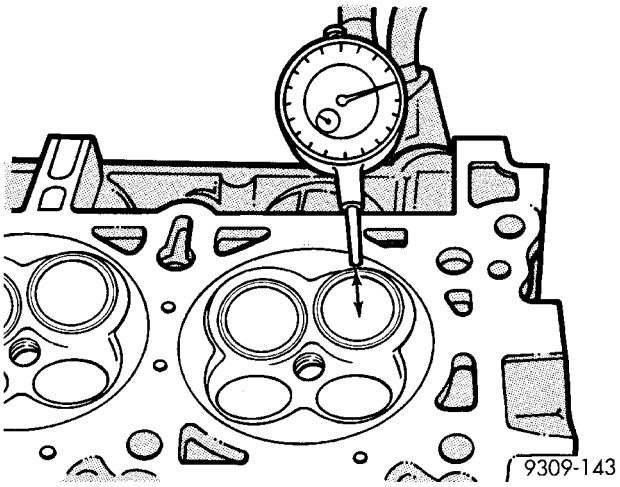

Fig. 36 Measuring Valve Guide Wear - Typical

INSTALLATION

(1) Coat valve stems with clean engine oil and insert them in cylinder head.

(2) If valves or seats have been reground, check valve tip height (A) (Fig. 37). If valve tip height for intake valve is greater than 47.59 mm (1.8737 in.) or 49.14 mm (1.9347 in.) for exhaust valve, grind valve tip until within specifications. Make sure measurement is taken from cylinder head surface to the top of valve stem.

(3) Install valve spring. (Refer to 9 - ENGINE/CYLINDER HEAD/VALVE SPRINGS - INSTALLATION)

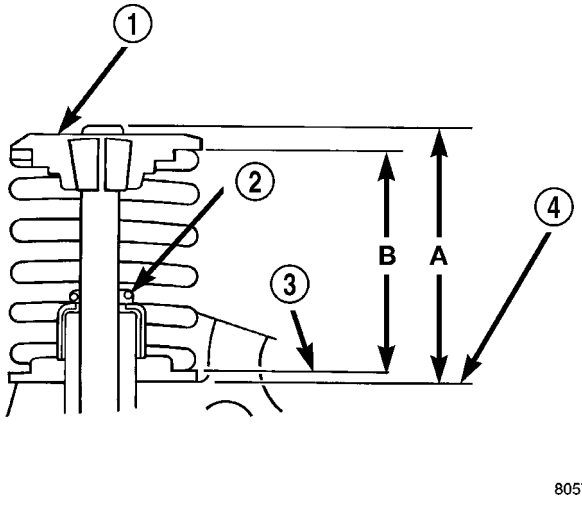

Fig. 37 Checking Valve Tip Height and Valve Spring Installed Height

1 - SPRING RETAINER
2 - GARTER SPRING
3 - VALVE SPRING SEAT TOP
4 - CYLINDER HEAD SURFACE

VALVE SPRINGS

DESCRIPTION

The valve springs are made from high strength, chrome-silicon steel (Fig. 15). The springs are common for intake and exhaust applications. The valve spring seat is integral with the valve stem seal, which incorporates a garter spring to maintain consistent lubrication control to the valve stem.

REMOVAL

REMOVAL - IN VEHICLE

(1) Perform fuel system pressure release procedure **before attempting any repairs.** (Refer to 14 - FUEL SYSTEM/FUEL DELIVERY - STANDARD PROCEDURE)

(2) Disconnect negative cable from remote jumper terminal.

(3) Remove air cleaner housing and inlet hose.

(4) Remove upper intake manifold. (Refer to 9 - ENGINE/MANIFOLDS/INTAKE MANIFOLD - REMOVAL)

(5) Remove cylinder head covers. (Refer to 9 - ENGINE/CYLINDER HEAD/CYLINDER HEAD COVER(S) - REMOVAL)

(6) Remove crankshaft vibration damper (Refer to 9 - ENGINE/ENGINE BLOCK/VIBRATION DAMPER - REMOVAL), timing chain cover (Refer to 9 - ENGINE/VALVE TIMING/TIMING BELT / CHAIN COVER(S) - REMOVAL), and timing chain (Refer to 9 - ENGINE/VALVE TIMING/TIMING BELT/CHAIN AND SPROCKETS - REMOVAL).

(7) Remove camshafts and rocker arms. (Refer to 9 - ENGINE/CYLINDER HEAD/CAMSHAFT(S) - REMOVAL)

(8) With air hose attached to spark plug adapter installed in the cylinder being serviced, apply 620.5–689 kPa (90–100 psi) air pressure. This is to hold valves in place while servicing components.

(9) Using Special Tool MD 998772A with adapter 6779, compress valve spring and remove valve locks, retainer, and valve spring.

(10) Remove valve stem seal (Refer to 9 - ENGINE/CYLINDER HEAD/VALVE STEM SEALS - REMOVAL).

REMOVAL - OFF VEHICLE

(1) With cylinder head removed, compress valve springs using a Special Tool C-3422-D, Valve Spring Compressor.

(2) Remove valve retaining locks, valve spring retainers, valve springs and valve spring seat/stem seal assembly (Fig. 38).

INSPECTION

Whenever valves have been removed for inspection, reconditioning or replacement, valve springs should be tested (Fig. 39). **As an example;** the compression length of a spring to be tested is 38.00 mm (1.496 in.). Turn the table of Tool C-647 until surface is in line with the 38.00 mm (1.496 in.) mark on the threaded stud and the zero mark on the front. Place spring over stud on the table and lift compressing lever to set tone device. Pull on torque wrench until ping is heard. Take reading on torque wrench at this instant. Multiply this reading by two. This will give the spring load at test length. Fractional measurements are indicated on the table for finer adjustments. Refer to Engine Specifications to obtain specified height and allowable tensions (Refer to 9 - ENGINE - SPECIFICATIONS). Replace any springs that do not meet specifications.

VALVE SPRINGS (Continued)

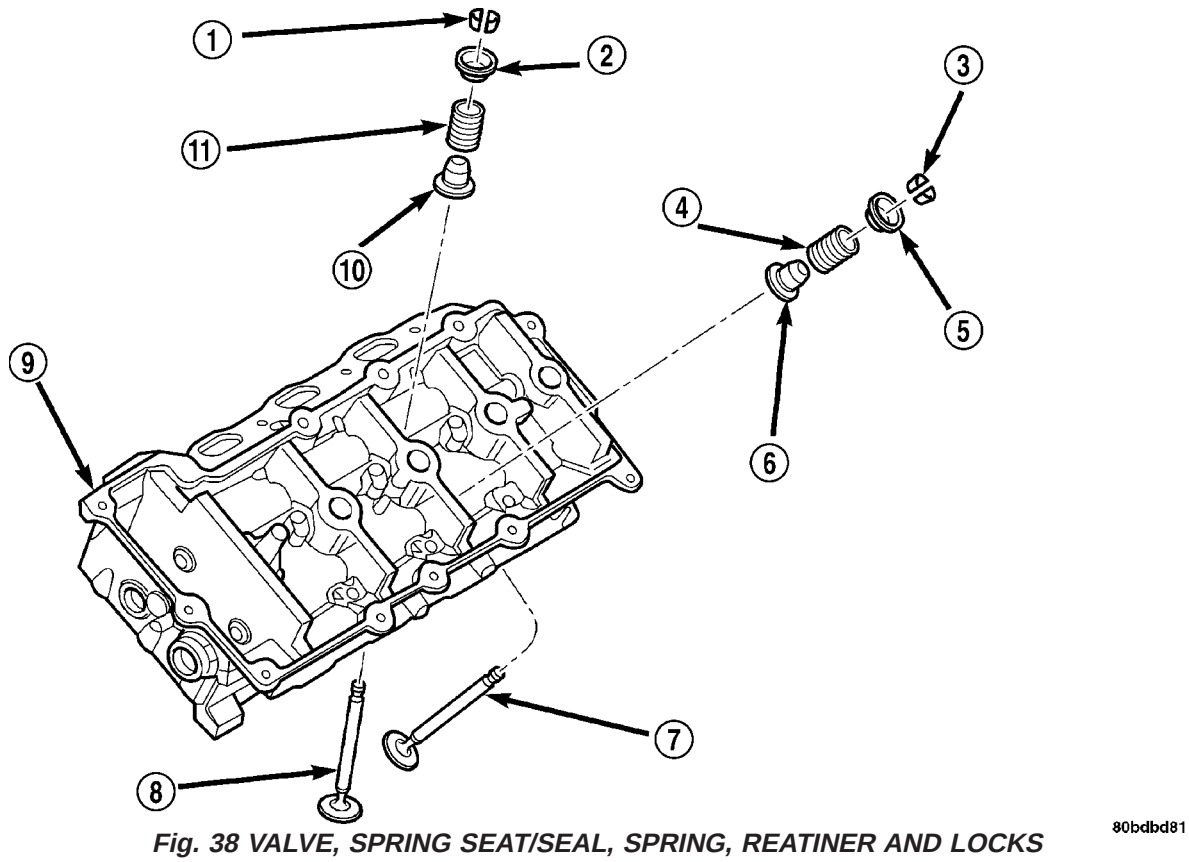

Fig. 38 VALVE, SPRING SEAT/SEAL, SPRING, REATINER AND LOCKS

1 - VALVE KEEPER
2 - SPRING RETAINER
3 - VALVE KEEPER
4 - VALVE SPRING-EXHAUST
5 - SPRING RETAINER
6 - VALVE STEM SEAL
7 - VALVE-EXHAUST
8 - VALVE-INTAKE
9 - CYLINDER HEAD
10 - VALVE STEM SEAL
11 - VALVE SPRING-INTAKE

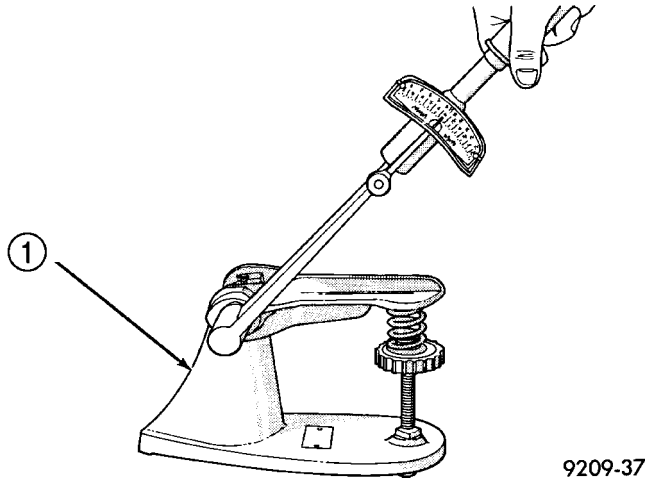

Fig. 39 TESTING VALVE SPRING

1 - SPECIAL TOOL C-647

VALVE SPRINGS (Continued)

INSTALLATION

INSTALLATION - IN VEHICLE

(1) The valve stem seal/valve spring seat should be pushed firmly and squarely over the valve guide using the valve stem as guide. **Do Not Force** seal against top of guide. When installing the valve retainer locks, compress the spring **only enough** to install locks

(2) Follow the same procedure on the remaining cylinders using the firing sequence 1-2-3-4-5-6. **Make sure piston is at TDC on the cylinder that the valve spring is to be removed.**

(3) Remove spark plug adapter tool and Special Tool MD 998772A.

(4) Install rocker arm(s).

(5) Install camshafts (Refer to 9 - ENGINE/CYLINDER HEAD/CAMSHAFT(S) - INSTALLATION), timing chain (Refer to 9 - ENGINE/VALVE TIMING/TIMING BELT/CHAIN AND SPROCKETS - INSTALLATION), and timing chain cover (Refer to 9 - ENGINE/VALVE TIMING/TIMING BELT / CHAIN COVER(S) - INSTALLATION).

(6) Install cylinder head covers. (Refer to 9 - ENGINE/CYLINDER HEAD/CYLINDER HEAD COVER(S) - INSTALLATION)

(7) Install upper intake manifold. (Refer to 9 - ENGINE/MANIFOLDS/INTAKE MANIFOLD - INSTALLATION)

(8) Install air cleaner housing and inlet hose.

(9) Connect negative cable.

INSTALLATION - OFF VEHICLE

(1) If removed, install valve(s). (Refer to 9 - ENGINE/CYLINDER HEAD/INTAKE/EXHAUST VALVES & SEATS - INSTALLATION)

(2) If valves or seats have been reground, check valve tip height (A) (Fig. 40). If valve tip height for intake valve is greater than 47.59 mm (1.8737 in.) or 49.14 mm (1.9347 in.) for exhaust valve, grind valve tip until within specifications. Make sure measurement is taken from cylinder head surface to the top of valve stem.

(3) Install valve seal/spring seat assembly over valve guides on all valve stems (Fig. 41). Ensure that the garter spring is intact around the top of the rubber seal. Install valve springs, valve retainers.

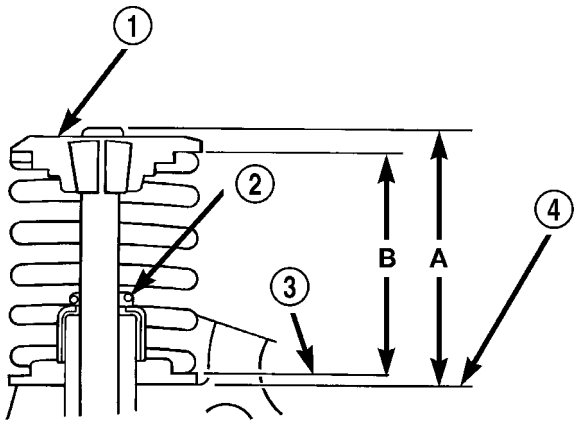

80570e02

Fig. 40 Valve Tip Height and Valve Spring Installed Height

1 - SPRING RETAINER
2 - GARTER SPRING
3 - VALVE SPRING SEAT TOP
4 - CYLINDER HEAD SURFACE

(4) Compress valve springs with a valve spring compressor install locks and release tool. **If valves and/or seats are reground, measure the installed height of springs (B) (Fig. 40), make sure measurements are taken from top of spring seat to the bottom surface of spring retainer.** If height is greater than 38.75 mm (1.5256 in.), install a 0.762 mm (0.030 in.) spacer in head counterbore under the valve spring seat to bring spring height back within specification.

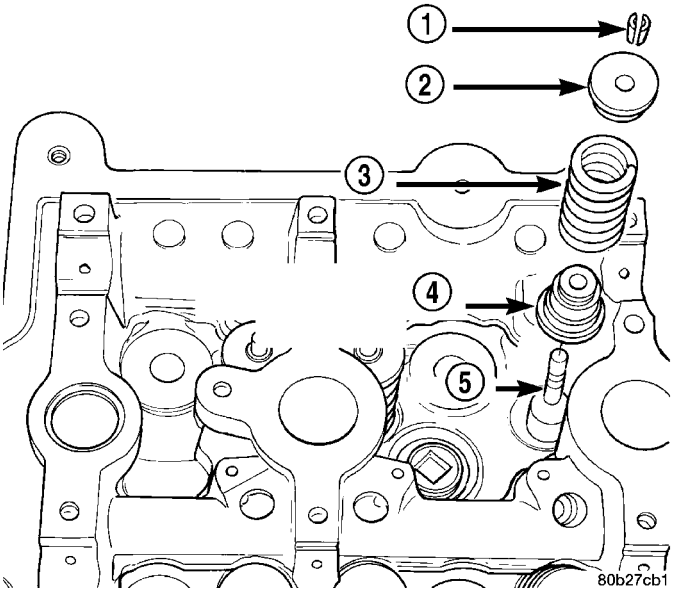

80b27cb1

Fig. 41 Valve Seal and Spring

1 - VALVE RETAINING LOCKS
2 - VALVE SPRING RETAINER
3 - VALVE SPRING
4 - VALVE SEAL AND VALVE SPRING SEAT ASSEMBLY
5 - VALVE

VALVE STEM SEALS

REMOVAL

(1) Remove valve spring. (Refer to 9 - ENGINE/ CYLINDER HEAD/VALVE SPRINGS - REMOVAL)

(2) Remove valve stem seal by using a valve seal tool (Fig. 42).

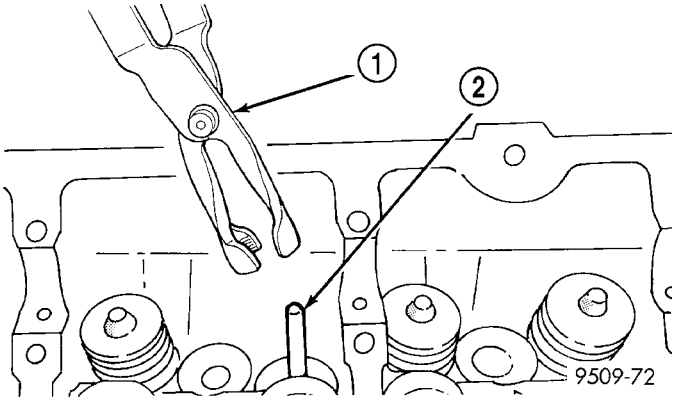

Fig. 42 Valve Stem Seal—Removal

1 - VALVE SEAL TOOL
2 - VALVE STEM

INSTALLATION

(1) The valve stem seal/valve spring seat should be pushed firmly and squarely over the valve guide using the valve stem as guide. **Do Not Force** seal against top of guide.

(2) Install valve spring. (Refer to 9 - ENGINE/ CYLINDER HEAD/VALVE SPRINGS - INSTALLATION)

HYDRAULIC LASH ADJUSTERS

DIAGNOSIS AND TESTING - HYDRAULIC LASH ADJUSTER NOISE DIAGNOSIS

Proper noise diagnosis is essential in locating the source of a NVH complaint. Locating a lash adjuster (tappet) type noise can sometimes be difficult. As a result, an initial misdiagnosis may occur.

Refer to LASH ADJUSTER (TAPPET) NOISE CHART indicating possible lash adjuster (tappet) noise sources and possible sources that could lead to a misdiagnosis.

Refer to LASH ADJUSTER (TAPPET) NOISE CHART for possible causes and correction of a lash adjuster (tappet) type noise.

LASH ADJUSTER (TAPPET) NOISE CHART

POSSIBLE CAUSES	CORRECTION
1. Engine oil level—too high or too low. This may cause aerated oil to enter the adjusters and cause them to be spongy.	1. Check and correct engine oil level.
2. Insufficient running time after rebuilding cylinder head.	2. Low speed running of up to 1 hour may be required to fully evacuate trapped air from the valve train system. During this time, turn engine off and let set for a few minutes before restarting. Repeat this several times after engine has reached normal operating temperature.
3. Air trapped in lash adjuster (after 1 hour run time).	3. See below: (a) Check lash adjusters for sponginess while installed in cylinder head. Depress part of rocker arm over adjuster. Normal adjusters should feel very firm. Very spongy adjusters can be bottomed out easily. (b) If lash adjuster(s) are still spongy, replace with new adjuster/rocker arm assembly.
4. Low oil pressure	4. See below: (a) Check and correct engine oil level. (b) Check engine oil pressure. (c) Check for excessive bearing clearance and correct. (d) Check for worn oil pump.

HYDRAULIC LASH ADJUSTERS (Continued)

POSSIBLE CAUSES	CORRECTION
5. Oil passage to cylinder head(s) plugged with debris.	5. Check cylinder head oil passages and cylinder head gasket restrictor for blockage. Clean or replace as necessary.
6. Worn valve guide(s).	6. Ream guide(s) and replace valve(s) with oversize valves and seal(s).
7. Air injested into oil due to broken or cracked oil pump pickup tube.	7. Inspect pickup tube and replace as necessary.
8. Collapsed lash adjuster due to debris injestion.	8. Clean debris from engine and replace lash adjuster(s).

REMOVAL

(1) Remove cylinder head cover(s). (Refer to 9 - ENGINE/CYLINDER HEAD/CYLINDER HEAD COVER(S) - REMOVAL)

(2) Remove rocker arm(s). (Refer to 9 - ENGINE/CYLINDER HEAD/ROCKER ARMS - REMOVAL)

CAUTION: If lash adjusters and rocker arms are to be reused, always mark position for reassembly in their original positions.

(3) Remove lash adjuster(s).

INSTALLATION

(1) Install hydraulic lash adjuster making sure adjusters are at least partially full of oil. This can be verified by little or no plunger travel when lash adjuster is depressed.

(2) Install rocker arm(s) (Refer to 9 - ENGINE/CYLINDER HEAD/ROCKER ARMS - INSTALLATION) and cylinder head covers (Refer to 9 - ENGINE/CYLINDER HEAD/CYLINDER HEAD COVER(S) - INSTALLATION).

ROCKER ARMS

DESCRIPTION

The rocker arms are composed of steel stampings with an integral roller bearing (Fig. 43). The rocker arms incorporate a 0.5 mm (0.0197 in.) oil hole in the lash adjuster socket for roller/camshaft lobe lubrication (Fig. 43).

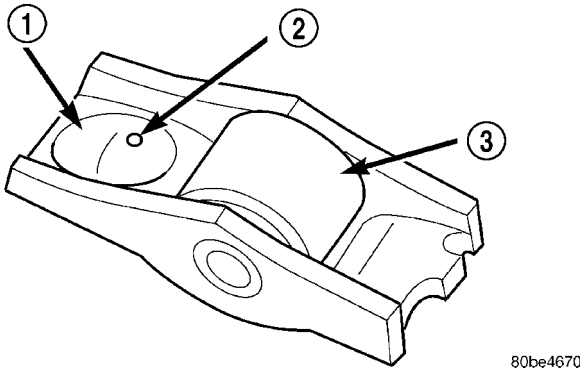

Fig. 43 Rocker Arm

1 – LASH ADJUSTER POCKET
2 – OIL SQUIRT HOLE
3 – ROLLER

ROCKER ARMS (Continued)

REMOVAL

(1) Remove cylinder head cover(s). (Refer to 9 - ENGINE/CYLINDER HEAD/CYLINDER HEAD COVER(S) - REMOVAL)

CAUTION: Always rotate engine by turning the crankshaft. Failure to do so will result in valve and/or piston damage.

(2) Rotate engine until the cam lobe is on its base circle (heel), on the rocker arm being removed.

CAUTION: Depress valve spring only enough to remove rocker arm.

(3) Using Special Tools 8215-A and 8216-A Adaptor, depress valve spring only enough to release tension on rocker arm (Fig. 44).

(4) Remove rocker arm from cylinder head.

CAUTION: If rocker arms are to be reused, identify position of rocker arms for reassembly in their original positions.

(5) Repeat procedure for each rocker arm removed.

(6) Inspect the rocker arm for wear or damage. (Refer to 9 - ENGINE/CYLINDER HEAD/ROCKER ARMS - INSPECTION)

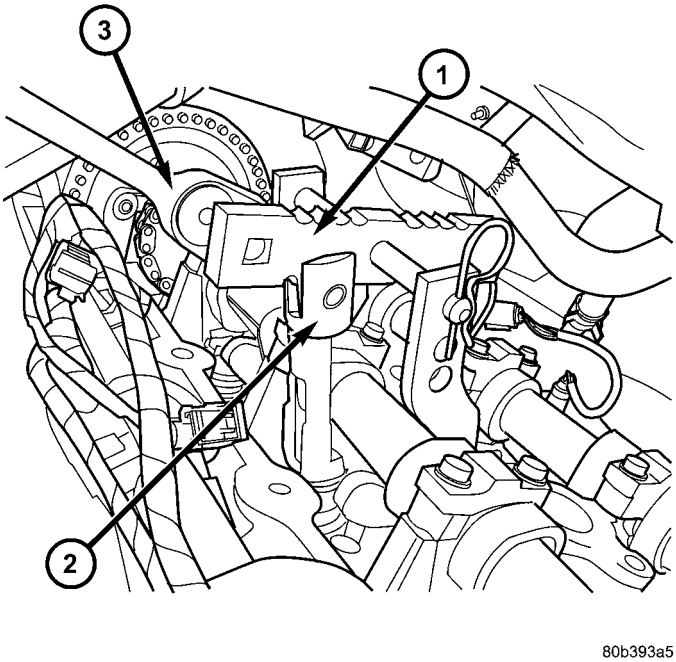

Fig. 44 Rocker Arm - Removal/Installation - 2.7L

1 - SPECIAL TOOL 8215-A
2 - SPECIAL TOOL 8216-A
3 - 3/8″ DRIVE RACHET

INSPECTION

Inspect the cam follower assembly for wear or damage (Fig. 45). Replace as necessary.

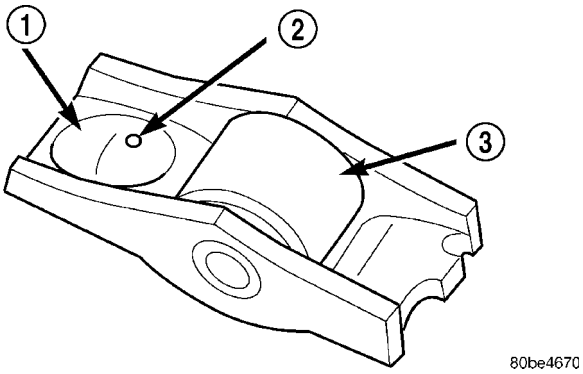

Fig. 45 Rocker Arm

1 – LASH ADJUSTER POCKET
2 – OIL SQUIRT HOLE
3 – ROLLER

INSTALLATION

(1) Lubricate rocker arms with clean engine oil before installation.

(2) Rotate engine until cam lobe is on its base circle (heel) of rocker arm being installed.

(3) Using Special Tools 8215-A and 8216-A Adaptor, depress valve spring only enough to install rocker arm (Fig. 44).

(4) Install rocker arm in original position (if reused) over valve and lash adjuster. Release tension on valve spring.

NOTE: Inspect rocker arm for proper engagement into lash adjuster and valve tip.

(5) Repeat procedure for each rocker arm being installed.

(6) Install cylinder head cover(s). Refer to procedure in this section.

ENGINE BLOCK

DESCRIPTION

The cylinder block is made of heat treated aluminum with cast-in-place iron liners (Fig. 46). The block is a closed deck design with the right bank forward. To provide high rigidity and improved NVH, the block has cast-in contours and ribs, along with powdered metal 6 bolt main caps (4 vertical, 2 horizontal), with a die cast aluminum structural beam windage tray mounted to the main caps.

The block design allows coolant flow between the cylinder bores and an internal coolant by-pass to the thermostat.

STANDARD PROCEDURE - CYLINDER BORE HONING

(1) Used carefully, the cylinder bore resizing hone, recommended tool C-823 or equivalent, equipped with 220 grit stones, is the best tool for this honing procedure. In addition to deglazing, it will reduce taper and out-of-round as well as removing light scuffing, scoring or scratches. Usually a few strokes will clean up a bore and maintain the required limits.

(2) Deglazing of the cylinder walls may be done using a cylinder surfacing hone, recommended tool C-3501 or equivalent, equipped with 280 grit stones, if the cylinder bore is straight and round. 20–60 strokes depending on the bore condition, will be sufficient to provide a satisfactory surface. Use a light honing oil. **Do not use engine or transmission oil, mineral spirits or kerosene.** Inspect cylinder walls after each 20 strokes.

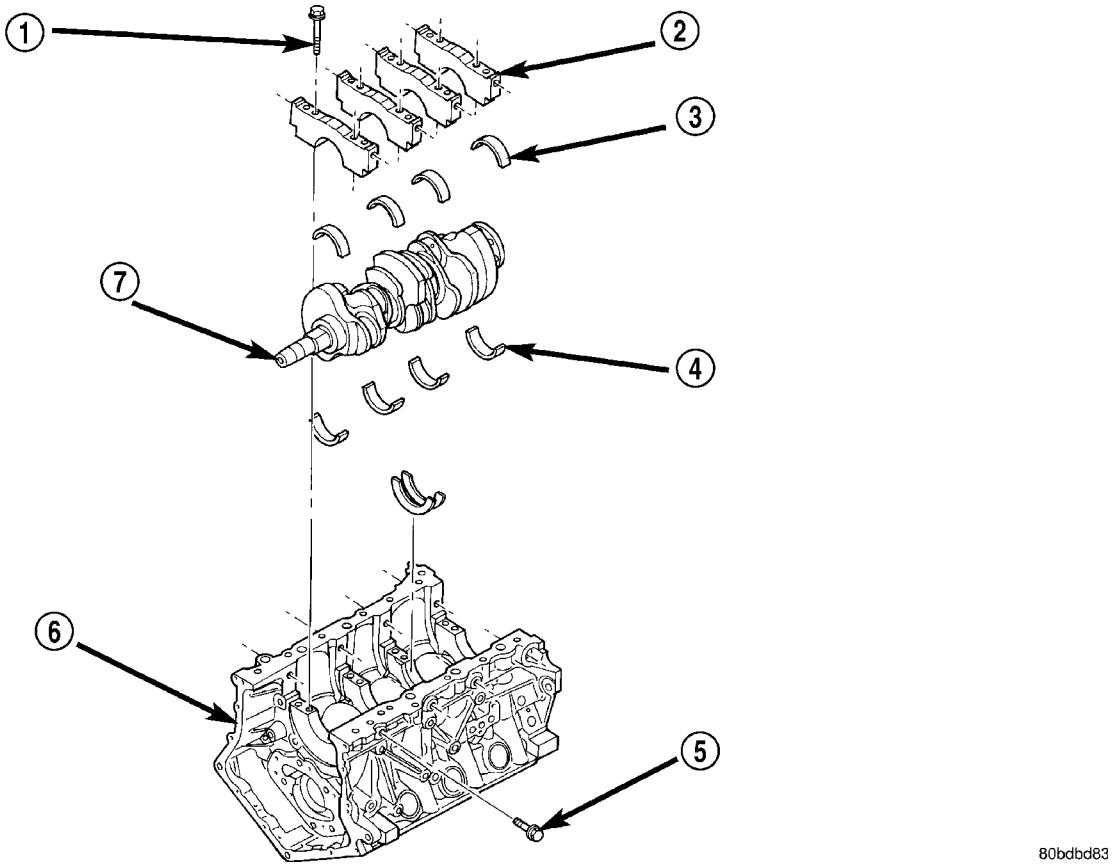

Fig. 46 ENGINE BLOCK AND CRANKSHAFT

1 - MAIN CAP BOLT—VERTICAL
2 - MAIN CAP
3 - MAIN BEARING—LOWER
4 - MAIN BEARING—UPPER
5 - MAIN CAP BOLT —HORIZONTAL
6 - CYLINDER BLOCK
7 - CRANKSHAFT

ENGINE BLOCK (Continued)

(3) Honing should be done by moving the hone up and down fast enough to get a cross-hatch pattern. When hone marks **intersect** at 40-60 degrees, the cross hatch angle is most satisfactory for proper seating of rings (Fig. 47).

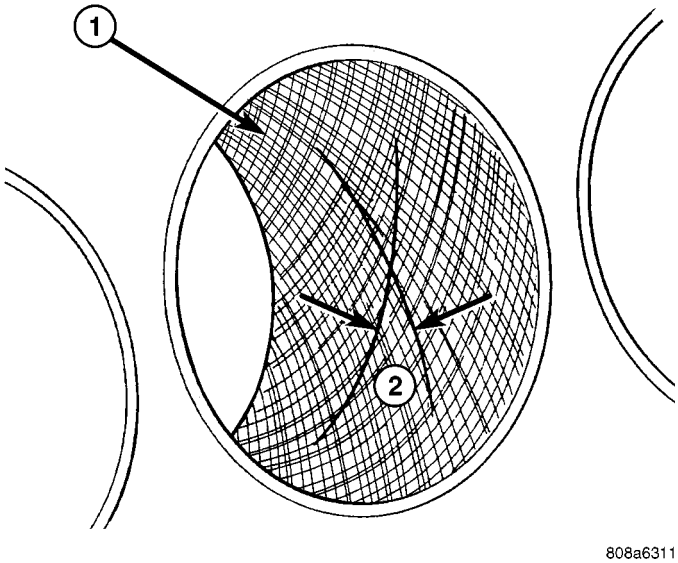

Fig. 47 Cylinder Bore Cross-Hatch Pattern

1 - CROSS-HATCH PATTERN
2 - 40°–60°

(4) A controlled hone motor speed between 200–300 RPM is necessary to obtain the proper cross-hatch angle. The number of up and down strokes per minute can be regulated to get the desired 40–60 degree angle. Faster up and down strokes increase the cross-hatch angle.

(5) After honing, it is necessary that the block be cleaned again to remove all traces of abrasive.

CAUTION: Ensure all abrasives are removed from engine parts after honing. It is recommended that a solution of soap and hot water be used with a brush and the parts then thoroughly dried. The bore can be considered clean when it can be wiped clean with a white cloth and cloth remains clean. Oil the bores after cleaning to prevent rusting.

CLEANING

Clean cylinder block thoroughly using a suitable cleaning solvent.

INSPECTION

ENGINE BLOCK

(1) Clean cylinder block thoroughly and check all core hole plugs for evidence of leaking.

(2) If new core plugs are to be installed, (Refer to 9 - ENGINE - STANDARD PROCEDURE - ENGINE CORE AND OIL GALLERY PLUGS).

(3) Examine block and cylinder bores for cracks or fractures.

(4) Check block deck surfaces for flatness. Deck surface must be within service limit of 0.1 mm (0.004 in.).

CYLINDER BORE

NOTE: The cylinder bores should be measured at normal room temperature, 21°C (70°F).

The cylinder walls should be checked for out-of-round and taper with Tool C119 or equivalent (Fig. 48) (Refer to 9 - ENGINE - SPECIFICATIONS). If the cylinder walls are badly scuffed or scored, the cylinder block should be replaced, and new pistons and rings fitted.

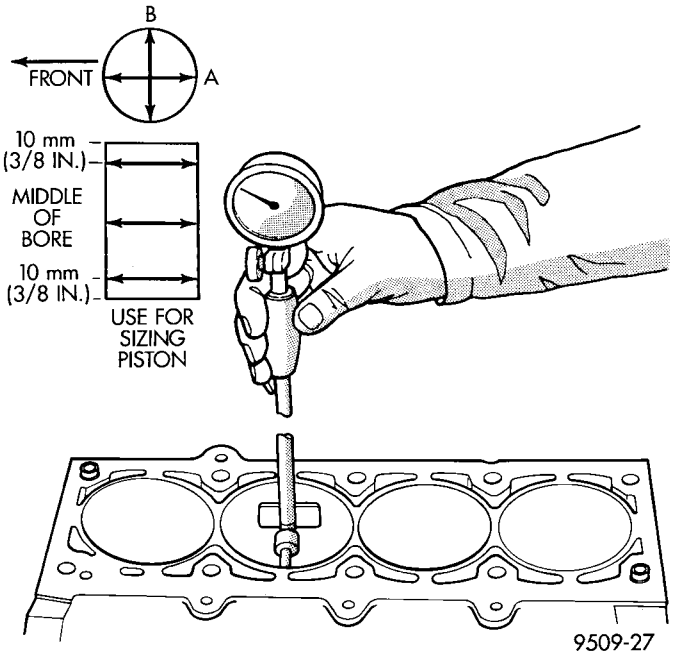

Fig. 48 Checking Cylinder Bore Size

Measure the cylinder bore at three levels in directions A and B (Fig. 48). Top measurement should be 10 mm (3/8 in.) down and bottom measurement should be 10 mm (3/8 in.) up from bottom of bore. (Refer to 9 - ENGINE - SPECIFICATIONS).

CONNECTING ROD BEARINGS

STANDARD PROCEDURE - CONNECTING ROD AND BEARING FITTING

CONNECTING ROD BEARING

Fit all connecting rods on one bank until complete.

The bearing caps are not interchangeable and should be marked at removal to ensure correct assembly.

CAUTION: Care must be taken not to damage the fractured rod and cap joint face surfaces as engine damage may occur.

The bearing shells must be installed with the tangs inserted into the machined grooves in the rods and caps. Also, assure that the hole in upper bearing half aligns with oil squirt hole in rod. Install cap with the tangs on the same side as the rod.

CAUTION: Assure that hole in upper bearing half aligns with hole in connecting rod as engine damage may occur.

Limits of taper or out-of-round on any crankshaft journals should be held to 0.015 mm (0.0006 in.). Bearings are available 0.025 mm (0.001 in.) and 0.250 mm (0.010 in.) undersize. **Install the bearings in pairs. Do not use a new bearing half with an old bearing half. Do not file the rods or bearing caps.**

(1) For measuring Main Bearing Clearance and Connecting Rod Bearing Clearance use plastigage (Fig. 49). For more information on using plastigage (Refer to 9 - ENGINE - STANDARD PROCEDURE). Refer to Engine Specifications for bearing clearance specifications (Refer to 9 - ENGINE - SPECIFICATIONS).

CONNECTING ROD BOLTS

NOTE: The connecting rod bearing cap bolts must be examined before reuse. If the threads are necked down due to stretching, the bolt(s) must be replaced (Fig. 50).

NOTE: Connecting rod bolts are retained in the rod cap with a light press fit. If bolts are to be removed, use a hammer and punch to drive bolts from connecting rod cap using care not to damage fractured cap surface.

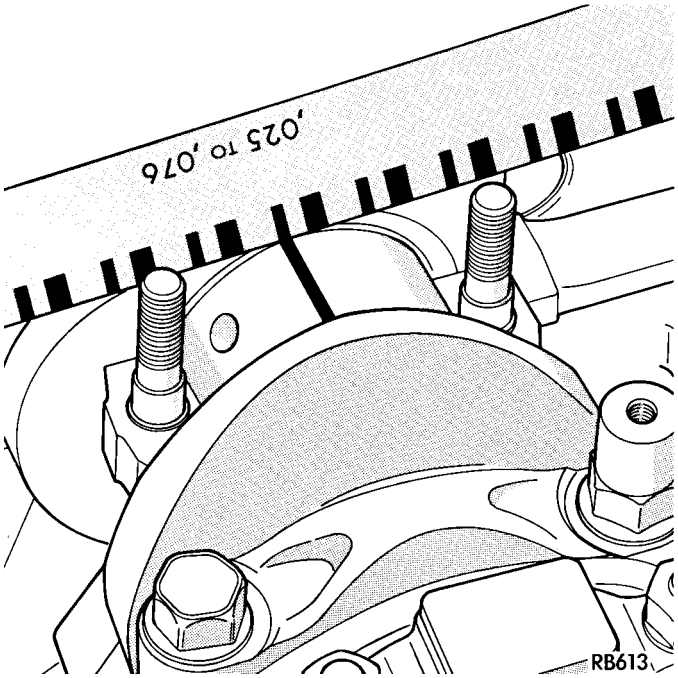

Fig. 49 Checking Connecting Rod Bearing Clearance—Typical

(1) Examine connecting rod bolt for stretching. Stretching can be checked by holding a scale or straight edge against the threads. If all the threads do not contact the scale the bolt should be replaced.

(2) Before installing the bolts, lubricate the threads with engine oil.

(3) Install bolts finger tight. Then alternately torque each nut to assemble the cap properly.

(4) Tighten the nuts to specification. (Refer to 9 - ENGINE - SPECIFICATIONS)

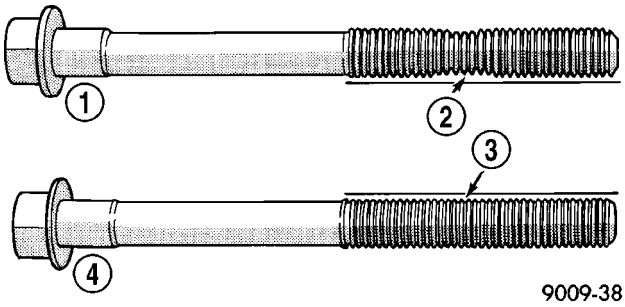

Fig. 50 Check for Stretched Bolts

1 - STRETCHED BOLT
2 - THREADS ARE NOT STRAIGHT ON LINE
3 - THREADS ARE STRAIGHT ON LINE
4 - UNSTRETCHED BOLT

CONNECTING ROD BEARINGS (Continued)

CONNECTING ROD SIDE CLEARANCE

(1) Mount a dial indicator to a stationary point on engine. Locate probe perpendicular to and resting against the connecting rod cap being checked. Move connecting rod all the way to rear of its travel. Zero the dial indicator. Move connecting rod forward to limit of travel and read the dial indicator (Fig. 51). Compare measurement to specification listed in engine specifications (Refer to 9 - ENGINE - SPECIFICATIONS). Repeat procedure for each connecting rod. Turn crankshaft for connecting rod accessibility.

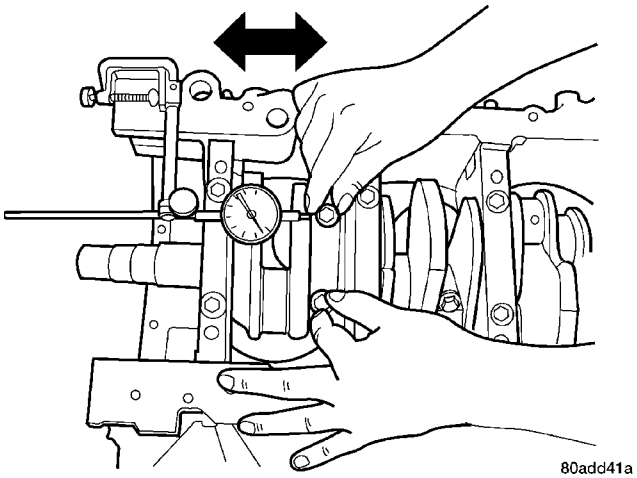

Fig. 51 Connecting Rod Side Clearance Measuring

CRANKSHAFT

DESCRIPTION

The crankshaft is constructed of a forged micro alloy steel. The six throw, nine counterweight crankshaft is supported by four select fit main bearings with the number three serving as the thrust washer location (Fig. 46). The select fit identification markings will be on the rear side of the number nine (rearmost) counterweight. The six separate connecting rod throws are an even-firing design which reduces torque fluctuations while a vibration damper is used to control torsional vibration.

The crankshaft oil seals are a one piece design. The front seal is retained by the timing chain cover, and the rear seal in a housing that attaches to the cylinder block.

STANDARD PROCEDURE - CRANKSHAFT END PLAY

(1) Mount a dial indicator to a stationary point at front of engine. Locate the probe perpendicular against nose of crankshaft (Fig. 52).

(2) Move crankshaft all the way to the rear of its travel.

(3) Zero the dial indicator.

(4) Move crankshaft all the way to the front and read the dial indicator. For crankshaft end play clearances (Refer to 9 - ENGINE - SPECIFICATIONS).

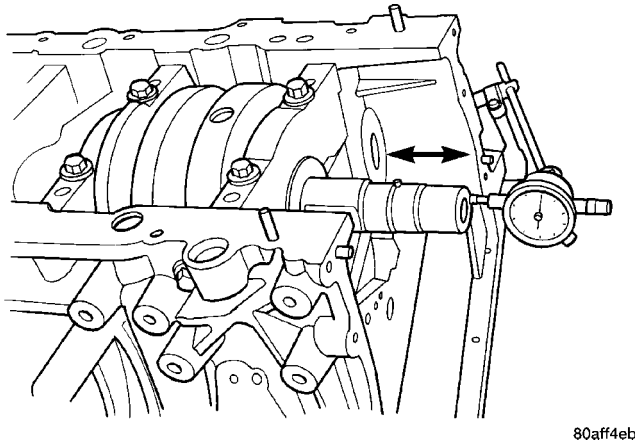

Fig. 52 CHECKING CRANKSHAFT END PLAY

REMOVAL

(1) Remove engine from vehicle (Refer to 9 - ENGINE - REMOVAL).

(2) Mount engine on an engine stand.

(3) Drain engine oil and remove oil filter.

(4) Remove oil pan and oil pick-up tube (Refer to 9 - ENGINE/LUBRICATION/OIL PAN - REMOVAL).

(5) Remove idler pulley bracket for accessory drive belt.

(6) Remove upper intake manifold (Refer to 9 - ENGINE/MANIFOLDS/INTAKE MANIFOLD - REMOVAL).

(7) Remove cylinder head covers (Refer to 9 - ENGINE/CYLINDER HEAD/CYLINDER HEAD COVER(S) - REMOVAL).

(8) Remove timing chain cover (Refer to 9 - ENGINE/VALVE TIMING/TIMING CHAIN COVER - REMOVAL).

(9) Remove primary timing chain (Refer to 9 - ENGINE/VALVE TIMING/TIMING CHAIN AND SPROCKETS - REMOVAL).

(10) Remove crankshaft sprocket (Refer to 9 - ENGINE/VALVE TIMING/TIMING CHAIN AND SPROCKETS - REMOVAL).

(11) Remove oil pump (Refer to 9 - ENGINE/LUBRICATION/OIL PUMP - REMOVAL).

(12) Remove crankshaft rear oil seal retainer (Refer to 9 - ENGINE/ENGINE BLOCK/CRANKSHAFT REAR OIL SEAL RETAINER - REMOVAL).

(13) Remove structural windage tray (Fig. 53).

(14) Turn crankshaft until connecting rod cap to be removed is accessible.

NOTE: Connecting rod bearing caps are not interchangeable and should be marked before removing to ensure correct reassembly.

CRANKSHAFT (Continued)

CAUTION: DO NOT use a number stamp or a punch to mark connecting rods. Damage to connecting rod could occur.

(15) Mark connecting rod bearing cap positions using a permanent ink marker or scribe tool.

(16) Remove connecting rod bearing caps. Use care to prevent damage to the crankshaft bearing surfaces.

CAUTION: Care should be taken not to damage the fractured rod and cap joint face surfaces or damage to the engine may occur.

(17) Remove main bearing cap bolts and tie bolts (Fig. 54).

(18) Remove main bearing caps (Fig. 54).

CAUTION: When removing crankshaft, use care not to damage bearing surfaces on the crankshaft

(19) Remove crankshaft from cylinder block (Fig. 55).

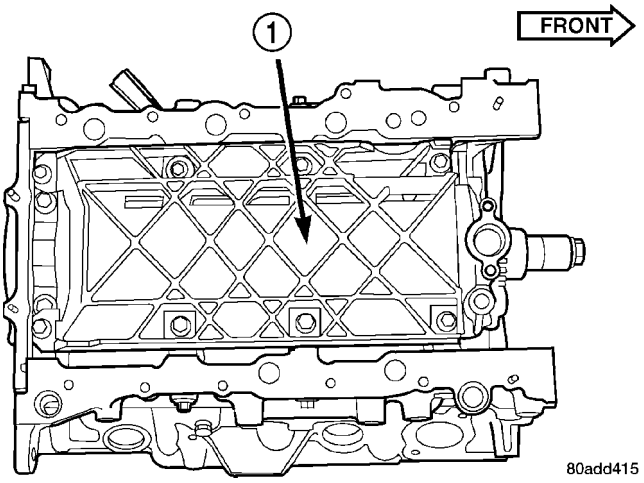

Fig. 53 Windage Tray

1 - STRUCTURAL WINDAGE TRAY

INSTALLATION

NOTE: Upper and lower bearing halves are NOT interchangeable.

CAUTION: Main bearings are select fit (Refer to 9 - ENGINE/ENGINE BLOCK/CRANKSHAFT MAIN BEARINGS - STANDARD PROCEDURE).

(1) Lubricate upper main bearing halves with engine oil (Fig. 56).

CAUTION: When installing crankshaft, use care not to damage bearing surfaces on the crankshaft.

(2) Install crankshaft (Fig. 55).

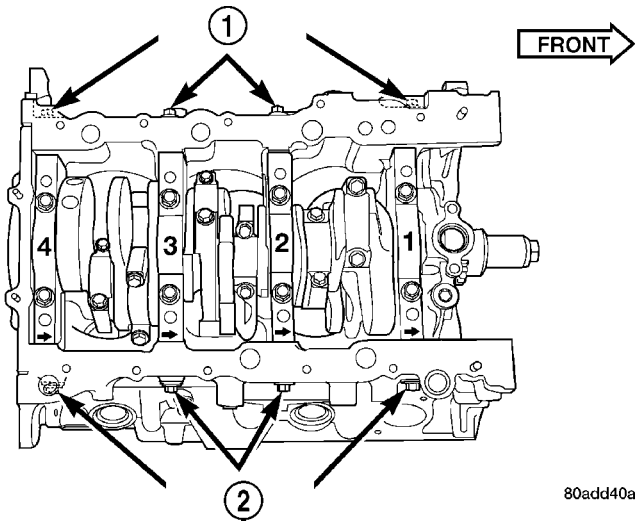

Fig. 54 Main Bearing Cap Identification

1 - TIE BOLTS
2 - TIE BOLTS

NOTE: Make sure that the coated and oil groove side of crankshaft thrust washer faces the crankshaft thrust surface.

(3) Push crankshaft forward. Lubricate and install the front thrust washer by rolling the thrust washer onto the machined shelf between the No. 3 upper main bulk head and crankshaft thrust surface (Fig. 57).

(4) Move crankshaft rearward. Lubricate and install the rear thrust washer by rolling the thrust washer onto the machined shelf between the No. 3 upper main bulk head and crankshaft thrust surface.

(5) Lubricate lower main bearings with engine oil.

(6) Install main bearings and caps.

NOTE: Lubricate main bearing cap bolts with engine oil before installation.

The main bearing cap bolts must be tightened in the proper sequence. First the inner main cap bolts, secondly the windage tray bolts, and lastly the main cap tie (horizontal) bolts.

(7) Install the inside main bearing cap bolts and tighten to 20 N·m + 1/4 Turn (15 ft. lbs. + 1/4 Turn) (Fig. 54).

(8) Measure crankshaft end play (Refer to 9 - ENGINE/ENGINE BLOCK/CRANKSHAFT - STANDARD PROCEDURE).

(9) Install connecting rods and measure side clearance (Refer to 9 - ENGINE/ENGINE BLOCK/CONNECTING ROD BEARINGS - STANDARD PROCEDURE).

CRANKSHAFT (Continued)

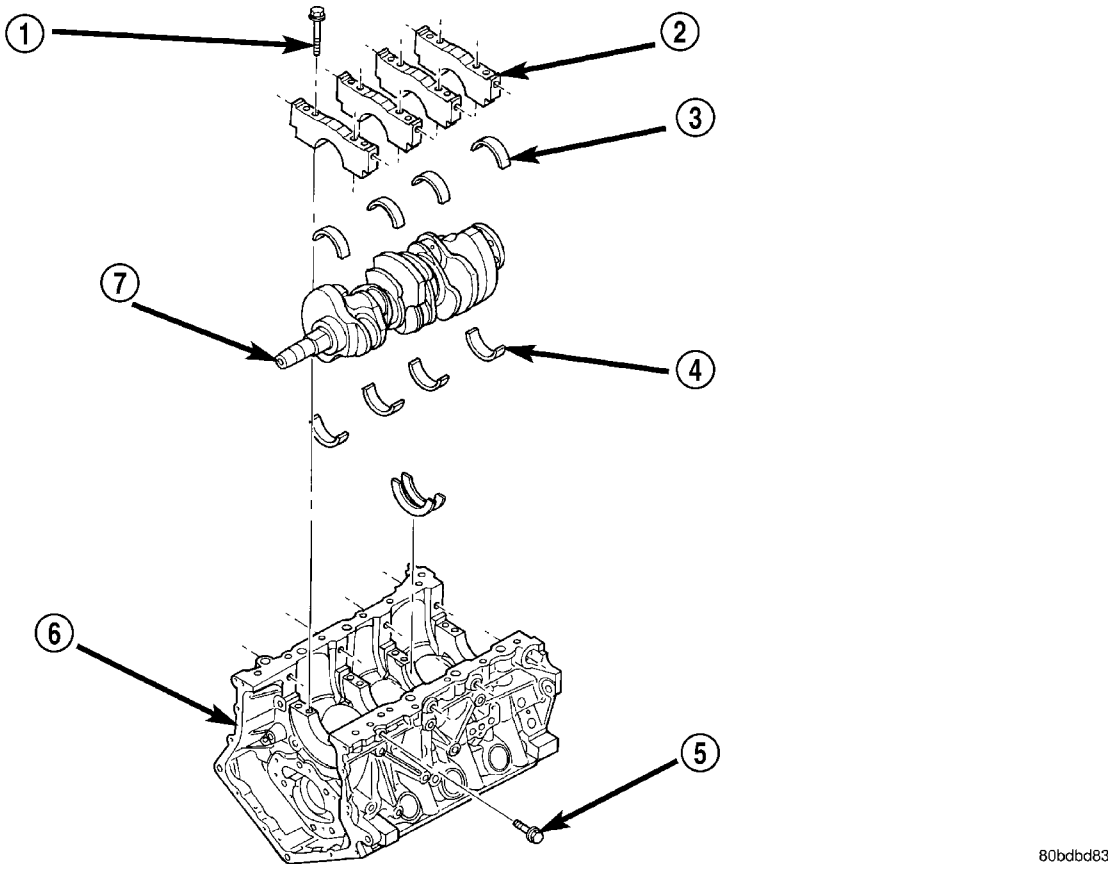

Fig. 55 CYLINDER BLOCK AND CRANKSHAFT

1 - MAIN CAP BOLT—VERTICAL
2 - MAIN CAP
3 - MAIN BEARING—LOWER
4 - MAIN BEARING—UPPER
5 - MAIN CAP BOLT —HORIZONTAL
6 - CYLINDER BLOCK
7 - CRANKSHAFT

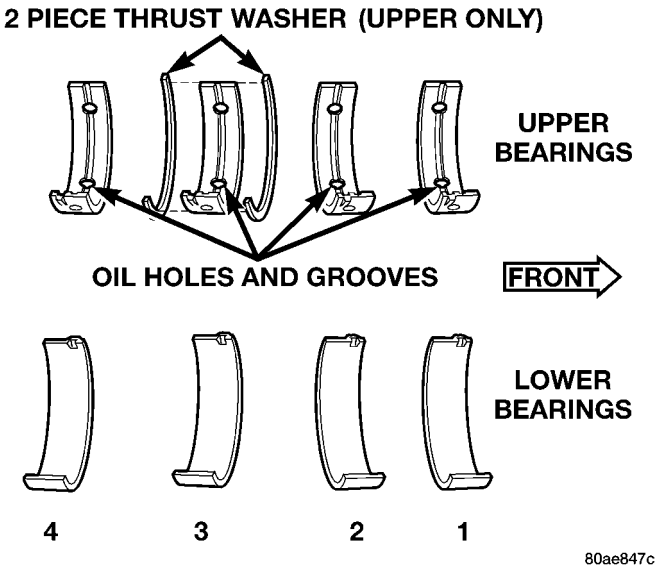

Fig. 56 Main Bearing Identification

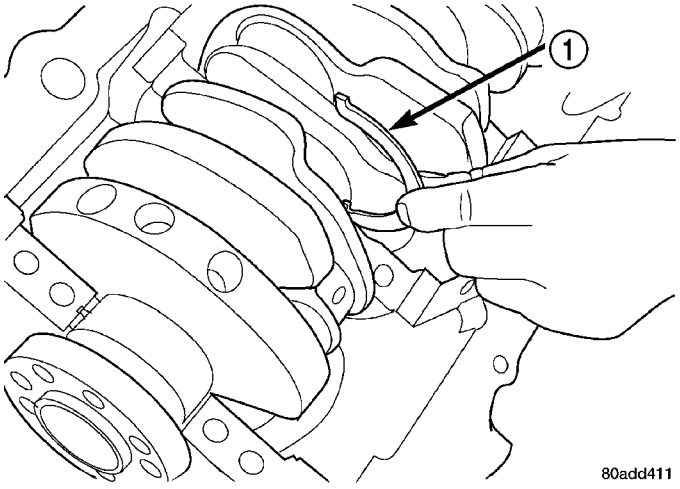

Fig. 57 Thrust Washer - Installation

1 - FRONT THRUST WASHER

CRANKSHAFT (Continued)

(10) Install windage tray (Fig. 53). Lubricate bolts with engine oil and tighten to 27 N·m + 1/4 Turn (20 ft. lbs. + 1/4 turn).

(11) Install the main cap tie (horizontal) bolts and tighten to 28 N·m (250 in. lbs.) (Fig. 54).

(12) Install rear crankshaft oil seal retainer and oil seal (Refer to 9 - ENGINE/ENGINE BLOCK/CRANKSHAFT REAR OIL SEAL RETAINER - INSTALLATION) (Refer to 9 - ENGINE/ENGINE BLOCK/CRANKSHAFT OIL SEAL - REAR - INSTALLATION).

(13) Install oil pump assembly (Refer to 9 - ENGINE/LUBRICATION/OIL PUMP - INSTALLATION).

(14) Install crankshaft sprocket (Refer to 9 - ENGINE/VALVE TIMING/TIMING CHAIN AND SPROCKETS - INSTALLATION).

(15) Install timing chain (Refer to 9 - ENGINE/VALVE TIMING/TIMING CHAIN AND SPROCKETS - INSTALLATION).

(16) Install timing chain cover (Refer to 9 - ENGINE/VALVE TIMING/TIMING CHAIN COVER - INSTALLATION).

(17) Install cylinder head covers (Refer to 9 - ENGINE/CYLINDER HEAD/CYLINDER HEAD COVER(S) - INSTALLATION).

(18) Install idler pulley bracket for accessory drive belt.

(19) Install oil pick-up tube and O-ring.

(20) Install oil pan and oil filter (Refer to 9 - ENGINE/LUBRICATION/OIL PAN - INSTALLATION).

(21) Install oil dipstick tube.

(22) Install engine assembly (Refer to 9 - ENGINE - INSTALLATION).

(23) Fill engine crankcase with proper oil to correct level (Refer to 9 - ENGINE/LUBRICATION/OIL - STANDARD PROCEDURE).

CRANKSHAFT MAIN BEARINGS

STANDARD PROCEDURE - CRANKSHAFT MAIN BEARING FITTING

The main bearings are “select fit” to achieve proper oil clearances. For main bearing selection, the block and crankshaft have grade identification marks.

The grade marks for the cylinder block main bearing bore grade is located on the pan rail just below the left side engine mount bracket (Fig. 59). These marks are read left to right, corresponding to main bore 1, 2, 3, 4.

The grade marks for the crankshaft are located on the rearmost crankshaft counter weight as shown in (Fig. 58). The crankshaft journal grade marks are read left to right, corresponding with journal number 1, 2, 3, 4.

Refer to the MAIN BEARING SELECTION CHART—2.7L to properly select the main bearings. For an example, if the main bore grade is 3 and the journal grade is 2, the proper select fit bearing would be (2) +0.003 mm (+0.0002 in.).

NOTE: Service main bearings have a number from 1–5 marked in ink on the bearing surface (Fig. 60). For verification, use the MAIN BEARING SELECTION CHART—2.7L for number to size identification.

The upper main bearing has a oil feed hole and a center groove to allow lubrication of the main journal and must be properly positioned in the block.

NOTE: Although cylinder bores are graded for size, there is only one piston size.

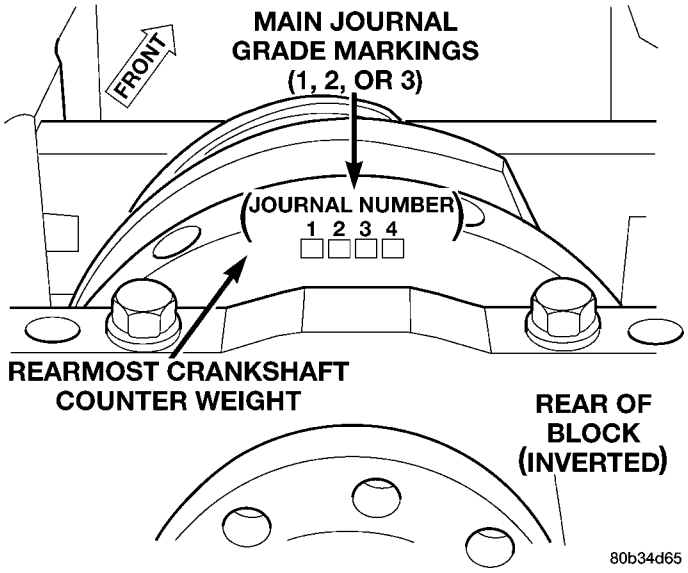

Fig. 58 Crankshaft Main Journal Grade Marking Location

CRANKSHAFT MAIN BEARINGS (Continued)

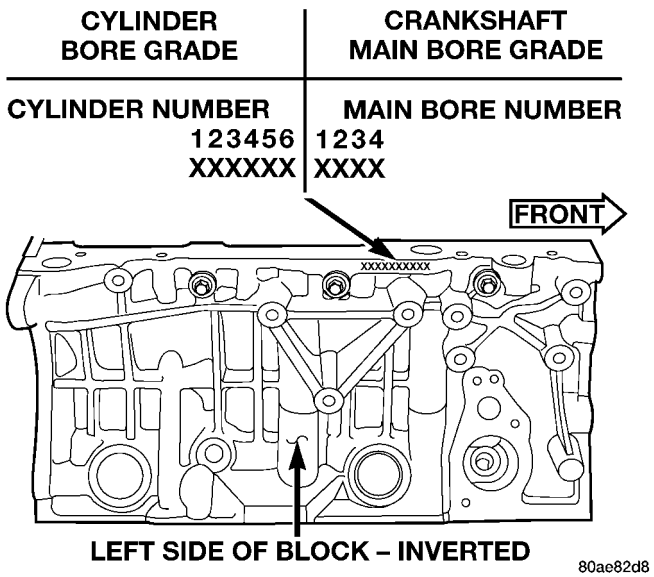

Fig. 59 Cylinder Block Main Bore Grade Marking

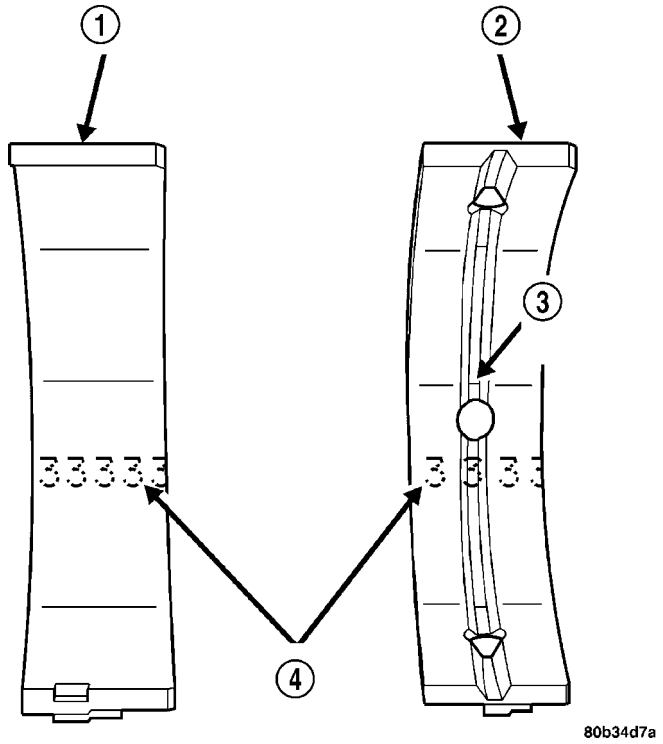

Fig. 60 Main Bearing Grade Marks

1 - LOWER MAIN BEARING
2 - UPPER MAIN BEARING
3 - OIL FEED HOLE AND GROOVE
4 - GRADE SELECTION INK MARKS

MAIN BEARING SELECTION CHART—2.7L

		Main Bearing Bore Grade Mark		
		1	2	3
Crankshaft Main Journal Grade Mark	1	(3) standard	(2) +0.003 mm (+0.0002 in.)	(1) +0.006 mm (+0.0003 in.)
	2	(4) -0.003 mm (-0.0002)	(3) standard	(2) +0.003 mm (+0.0002 in.)
	3	(5) -0.006 mm (-0.0003 in.)	(4) -0.003 mm (-0.0002 in.)	(3) standard

CRANKSHAFT OIL SEAL - FRONT

REMOVAL

(1) Remove crankshaft vibration damper. (Refer to 9 - ENGINE/ENGINE BLOCK/VIBRATION DAMPER - REMOVAL)

(2) Install Special Tool 8194, Insert into crankshaft nose. Remove seal using Special Tool 6771, Remover (Fig. 61).

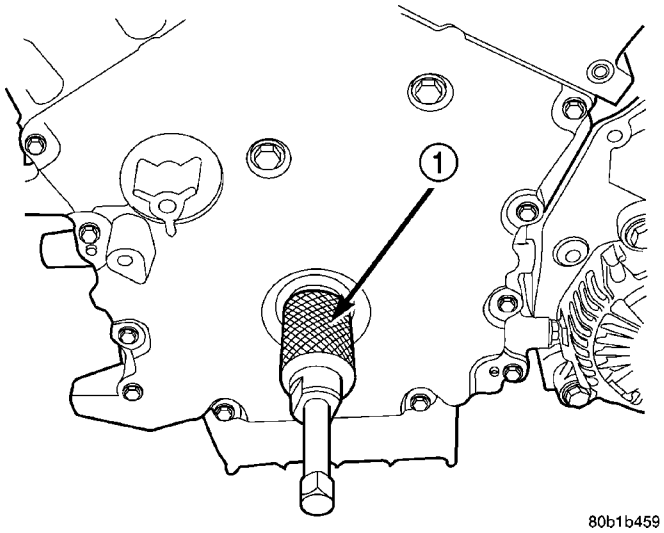

Fig. 61 Crankshaft Front Oil Seal - Removal

1 - SPECIAL TOOL 6771

CRANKSHAFT OIL SEAL - FRONT (Continued)

INSTALLATION

(1) Install new seal using Special Tools 6780-2 Sleeve, 6780-1 Installer, and 8179 Stud (Fig. 62).

(2) Install crankshaft vibration damper. (Refer to 9 - ENGINE/ENGINE BLOCK/VIBRATION DAMPER - INSTALLATION)

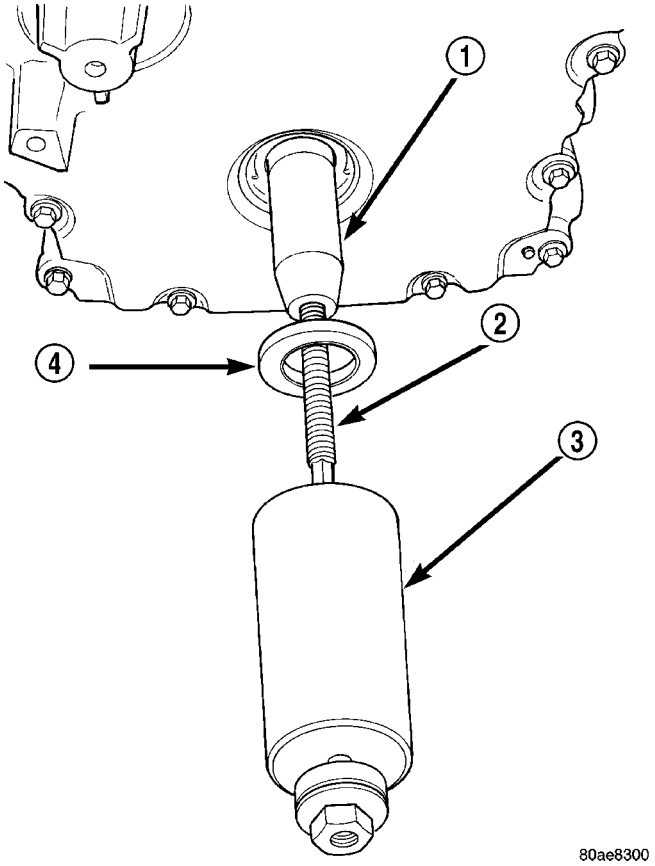

Fig. 62 Crankshaft Front Oil Seal - Installation

1 - SPECIAL TOOL 6780–2
2 - SPECIAL TOOL 8179
3 - SPECIAL TOOL 6780–1
4 - SEAL

CRANKSHAFT OIL SEAL - REAR

REMOVAL

(1) Remove transaxle from vehicle. (Refer to 21 - TRANSMISSION/TRANSAXLE/AUTOMATIC - 42LE - REMOVAL)

(2) Remove drive plate.

(3) Insert a 3/16” wide flat bladed screwdriver between the dust lip and the metal case of the crankshaft seal. Angle the screwdriver (Fig. 63) through the dust lip against the metal case of the seal. Pry out seal.

CAUTION: Do not allow the screwdriver blade to contact the crankshaft seal surface. Contact of the screwdriver blade against crankshaft edge (chamfer) is permitted.

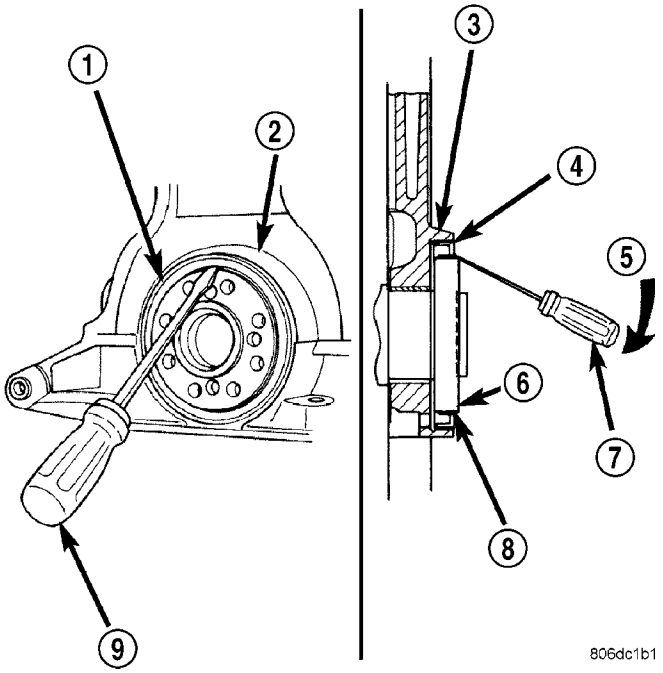

Fig. 63 Rear Crankshaft Oil Seal Removal - Typical

1 - REAR CRANKSHAFT SEAL
2 - ENGINE BLOCK
3 - ENGINE BLOCK
4 - REAR CRANKSHAFT SEAL METAL CASE
5 - PRY IN THIS DIRECTION
6 - CRANKSHAFT
7 - SCREWDRIVER
8 - REAR CRANKSHAFT SEAL DUST LIP
9 - SCREWDRIVER

INSTALLATION

CAUTION: If a burr or scratch is present on the crankshaft edge (chamfer), clean surface using 400 grit sand paper to prevent seal damage during installation.

(1) Place Special Tool 6926-1 Guide on crankshaft (Fig. 64). This is a pilot tool with a magnetic base.

(2) Position seal over pilot tool. Assure that lip of seal is facing towards the crankshaft during installation. The pilot tool remains on crankshaft during seal installation.

CRANKSHAFT OIL SEAL - REAR (Continued)

(3) Using Special Tool 6926-2 Installer, and C-4171 Handle (Fig. 64), drive seal into the retainer housing until seal is flush with housing surface.

(4) Install drive plate and transaxle. (Refer to 21 - TRANSMISSION/TRANSAXLE/AUTOMATIC - 42LE - INSTALLATION)

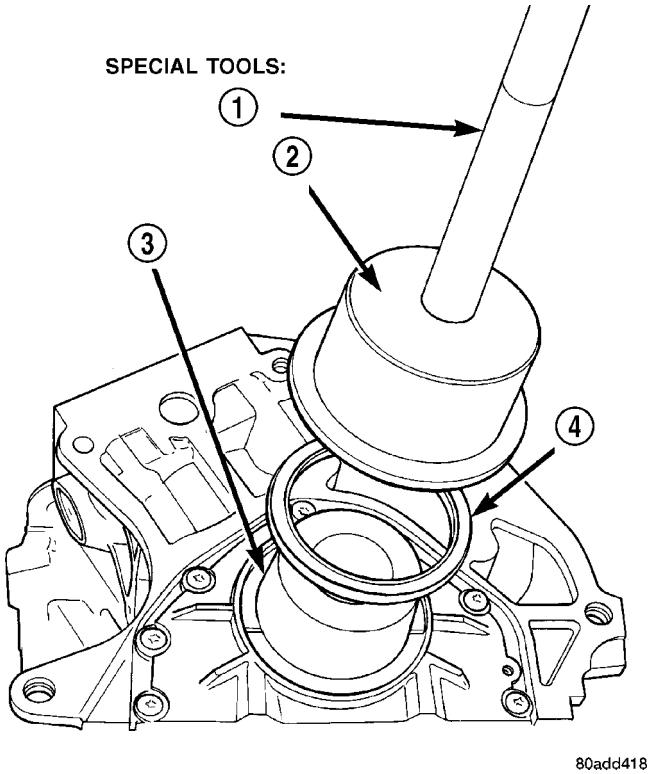

Fig. 64 Crankshaft Rear Seal - Installation

1 - C-4171 HANDLE
2 - 6926–2 INSTALLER
3 - 6926–1 GUIDE
4 - SEAL

CRANKSHAFT REAR OIL SEAL RETAINER

REMOVAL

(1) Remove crankshaft rear oil seal and oil pan. (Refer to 9 - ENGINE/ENGINE BLOCK/CRANKSHAFT OIL SEAL - REAR - REMOVAL) (Refer to 9 - ENGINE/LUBRICATION/OIL PAN - REMOVAL)

(2) Remove seal retainer attaching screws (Fig. 65).

(3) Remove retainer and gasket (Fig. 65).

INSTALLATION

(1) Clean sealing surfaces and replace gasket as needed.

(2) Install gasket and loose assemble seal retainer to block.

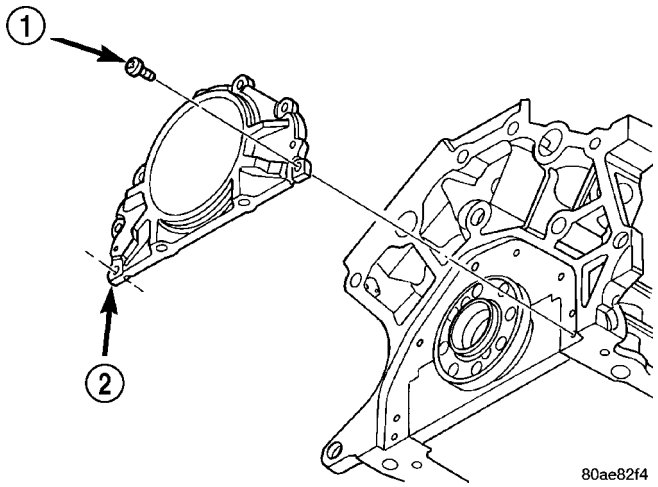

Fig. 65 Oil Seal Retainer

1 - SCREWS (7)
2 - SEAL RETAINER

NOTE: The following steps must be performed to prevent oil leaks at sealing joints.

(3) Attach Special Tools 8225 to pan rail using the oil pan fasteners.

NOTE: Make sure that the “2.7L” stamped on the special tool is facing the cylinder block (flat side of tools against pan rail).

(4) While applying firm pressure to the seal retainer against Special Tools 8225 (Fig. 66), tighten seal retainer screws to 12 N·m (105 in. lbs.).

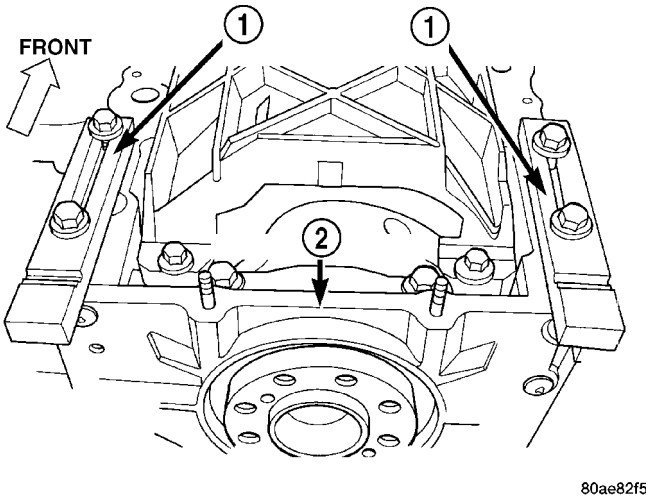

Fig. 66 SEAL RETAINER ALIGNMENT

1 - SPECIAL TOOLS 8225
2 - SEAL RETAINER

CRANKSHAFT REAR OIL SEAL RETAINER (Continued)

(5) Install oil pan and crankshaft rear oil seal. (Refer to 9 - ENGINE/LUBRICATION/OIL PAN - INSTALLATION) (Refer to 9 - ENGINE/ENGINE BLOCK/CRANKSHAFT OIL SEAL - REAR - INSTALLATION)

PISTON & CONNECTING ROD

DESCRIPTION

The pistons are made of a high strength aluminum alloy with an anodized top ring groove. Piston skirts are coated with a solid lubricant for scuff resistance. The connecting rods are made of powdered metal with a “fractured cap” design. The connecting rod attaches to the piston with a full floating pin retained by lock rings. The piston and connecting rod are serviced as an assembly (Fig. 67).

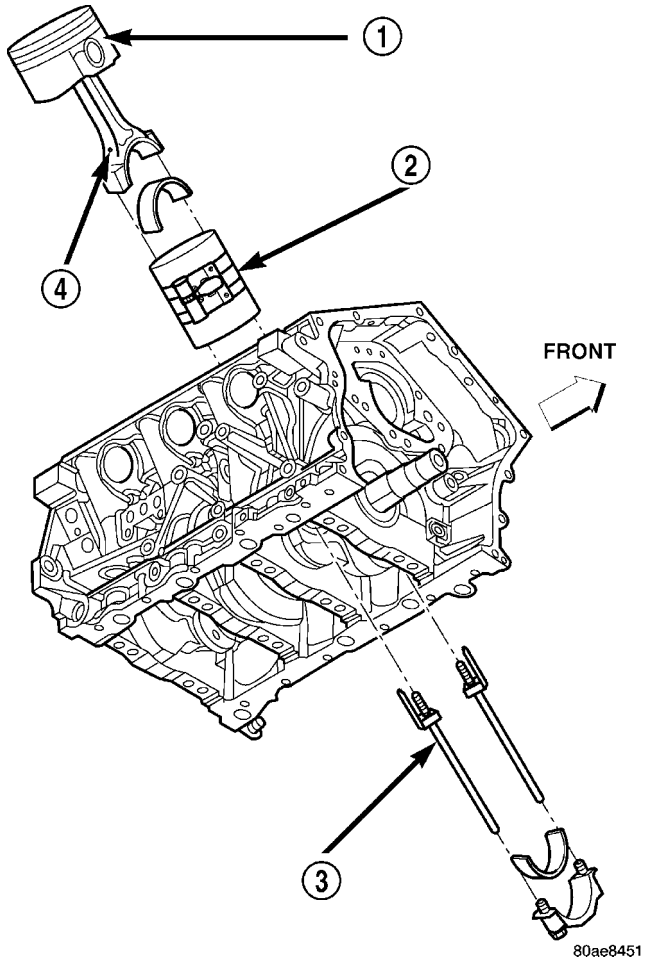

Fig. 67 Piston and Connecting Rod

1 - “F” TOWARD FRONT OF ENGINE
2 - RING COMPRESSOR
3 - SPECIAL TOOL 8189
4 - OIL SQUIRT HOLE

STANDARD PROCEDURE - FITTING PISTONS

The pistons have been cast and machined to one size and weight. The piston and rod assemblies are matched to weigh the same for engine balance.

Piston and cylinder wall must be clean and dry. Piston diameter should be measured 90 degrees to piston pin at size location shown in (Fig. 68). Cylinder bores should be measured halfway down the cylinder bore and transverse to the engine crankshaft center line. Refer to Engine Specifications. (Refer to 9 - ENGINE - SPECIFICATIONS) **Pistons and cylinder bores should be measured at normal room temperature, 70°F (21°C).**

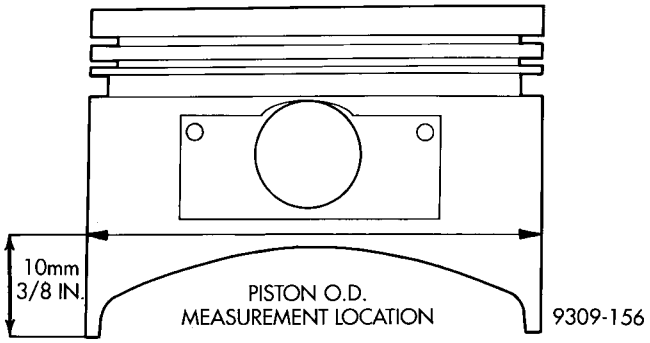

Fig. 68 Piston Measurements

PISTON PINS

The pistons have been cast and machined to one size and weight. The piston and rod assemblies are matched to weigh the same for engine balance.

The piston pin is full floating and is held in place by lock rings. **Do Not switch pistons with other rods**. Pistons and connecting rods are serviced as an assembly for balance.

REMOVAL

(1) Remove top ridge of cylinder bores with a reliable ridge reamer before removing pistons from cylinder block. **Be sure to keep tops of pistons covered during this operation. Pistons and connecting rods must be removed from top of cylinder block. When removing piston and connecting rod assemblies from the engine, rotate crankshaft so that each connecting rod is centered in cylinder bore.**

NOTE: Connecting rod bearing caps are not interchangeable and should be marked before removing to ensure correct reassembly.

CAUTION: DO NOT use a number stamp or a punch to mark connecting rods. Damage to connecting rod could occur.

PISTON & CONNECTING ROD (Continued)

(2) Mark connecting rod and bearing cap positions using a permanent ink marker or scribe tool (Fig. 69).

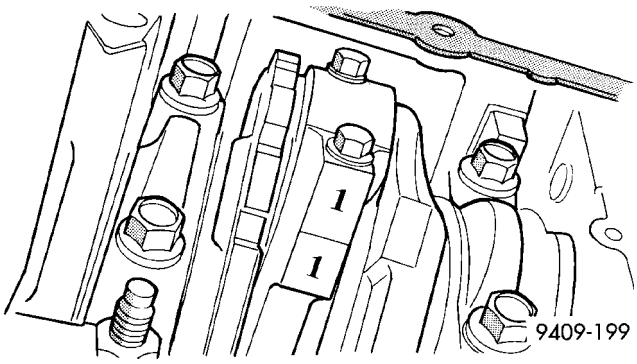

Fig. 69 IDENTIFY CONNECTING ROD TO CYLINDER

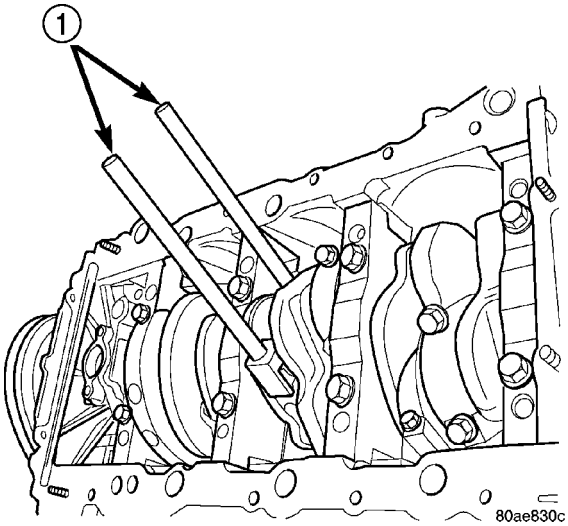

Fig. 70 CONNECTING ROD GUIDES

1 - SPECIAL TOOL 8189 CONNECTING ROD GUIDES

CAUTION: Care must be taken not to damage the fractured rod and cap joint face surfaces, as engine damage may occur.

(3) Remove connecting rod cap. Install Special Tool 8189 Connecting Rod Guides into the connecting rod being removed (Fig. 70). Remove each piston and rod assembly out of cylinder bore.

NOTE: Be careful not to nick crankshaft journals.

(4) After removal, install bearing cap on the mating rod to prevent damage to the fractured cap to rod surfaces.

INSTALLATION

(1) Install the piston rings. (Refer to 9 - ENGINE/ENGINE BLOCK/PISTON RINGS - INSTALLATION)

(2) Before installing piston and connecting rod assemblies into the bore, ensure that compression ring gaps are staggered so that neither is in line with oil ring rail gap.

(3) Before installing the ring compressor, make sure the oil ring expander ends are butted and the rail gaps located as shown in (Fig. 78).

(4) Immerse the piston head and rings in clean engine oil, slide the ring compressor over the piston and tighten with the special wrench. **Ensure position of rings does not change during this operation.**

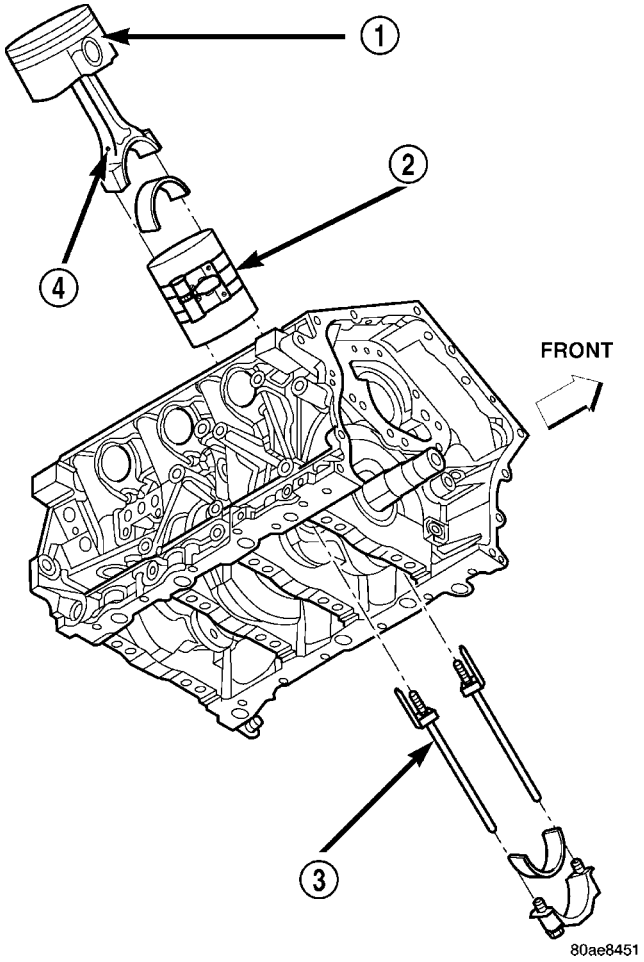

Fig. 71 Piston and Connecting Rod

1 - “F” TOWARD FRONT OF ENGINE
2 - RING COMPRESSOR
3 - SPECIAL TOOL 8189
4 - OIL SQUIRT HOLE

CAUTION: Ensure the hole in bearing half aligns with hole in connecting rod, as damage to engine may occur.

(5) Position bearing onto connecting rod. Ensure that hole in bearing half is aligned to hole in connecting rod. Lubricate bearing surface with clean engine oil.

PISTON & CONNECTING ROD (Continued)

(6) Install Special Tools 8189 Connecting Rod Guides into connecting rod (Fig. 70).

(7) The pistons are marked on top with an arrow and with an “F” (Front) above the pin boss. These marks must be pointing toward the front of engine on both cylinder banks. The connecting rod oil squirt hole faces the major thrust (right) side of the block (Fig. 72).

(8) Rotate crankshaft so that the connecting rod journal is on the center of the cylinder bore. Insert rod and piston into cylinder bore and guide rod over the crankshaft journal (Fig. 71).

CAUTION: Do Not interchange piston assemblies bank to bank, as engine damage may occur.

(9) Tap the piston down in cylinder bore, using a hammer handle. At the same time, guide connecting rod into position on connecting rod journal.

(10) Lubricate rod bolts and bearing surface with engine oil. Install connecting rod cap and bearing. Tighten bolts to 27 N·m (20 ft. lbs.) Plus 1/4 turn.

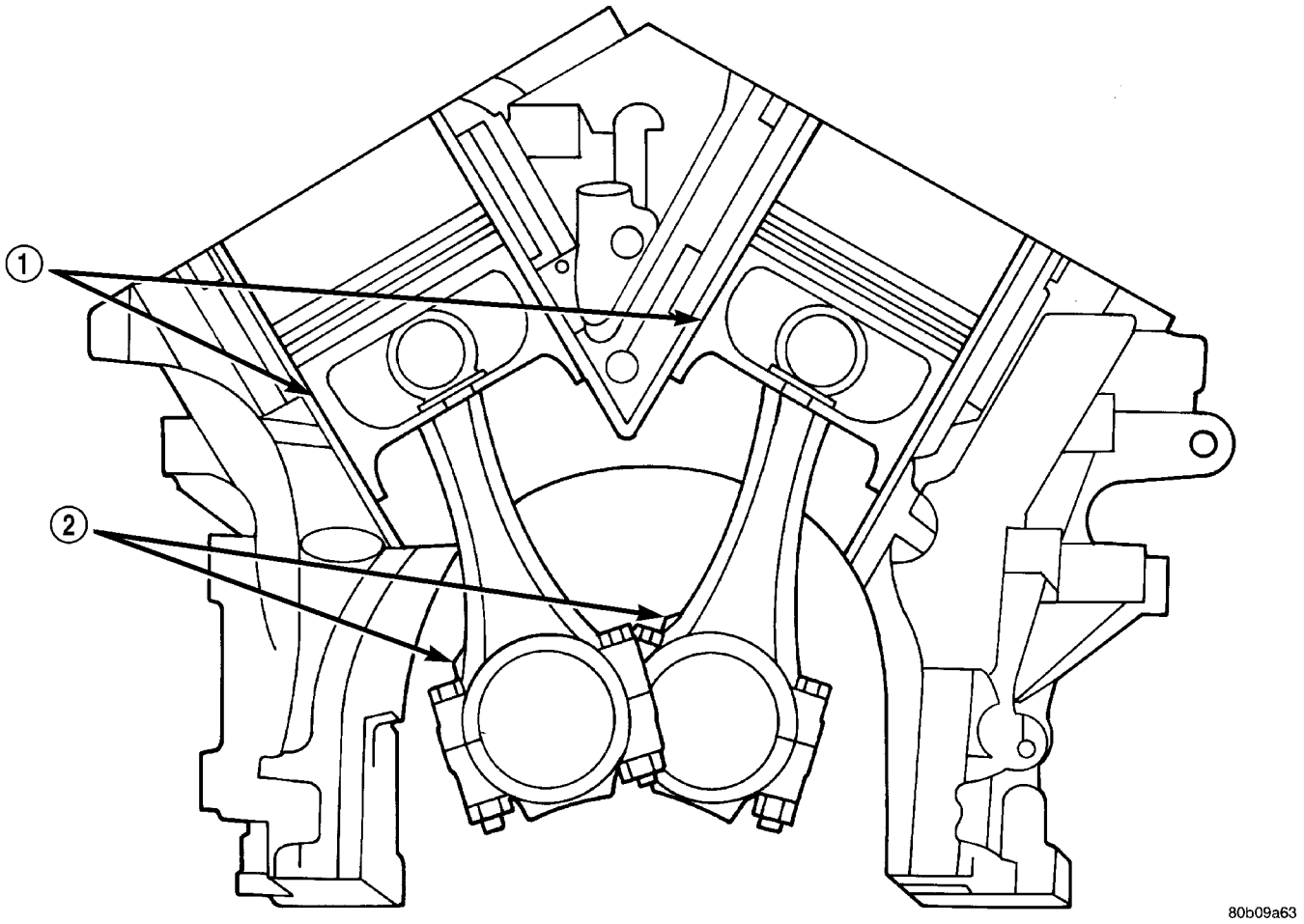

Fig. 72 Piston and Connecting Rod Positioning (Front View of Engine)

1 - MAJOR THRUST SIDE OF PISTON
2 - OIL SQUIRT HOLE

PISTON RINGS

STANDARD PROCEDURE - PISTON RING FITTING

(1) Wipe cylinder bore clean. Insert ring and push down with piston to ensure it is square in bore. The ring gap measurement must be made with the ring positioning at least 12 mm (0.50 inch.) from bottom of cylinder bore. Check gap with feeler gauge (Fig. 73). Refer to (Refer to 9 - ENGINE - SPECIFICATIONS) for clearance measurements.

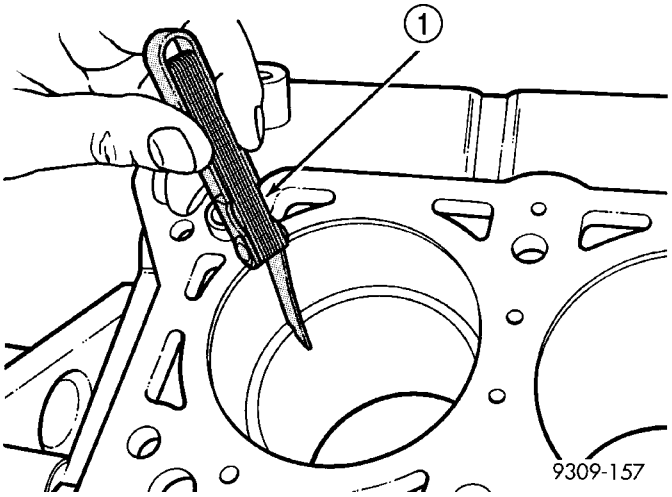

Fig. 73 CHECK GAP ON PISTON RINGS

1 - FEELER GUAGE

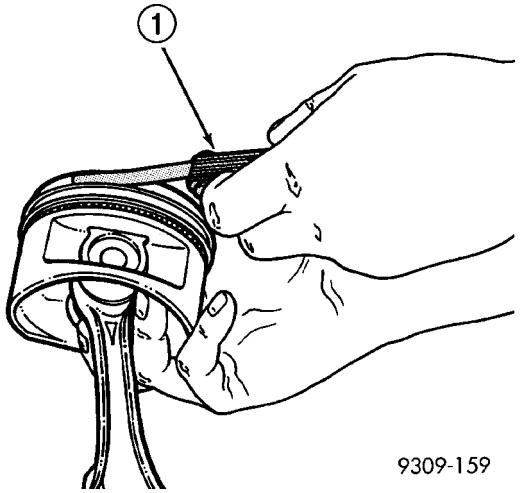

Fig. 74 Measuring Piston Ring Side Clearance

1 - FEELER GAUGE

(2) Check piston ring to groove clearance (Fig. 74). For clearance specifications (Refer to 9 - ENGINE - SPECIFICATIONS).

REMOVAL

(1) Remove piston and connecting rod. (Refer to 9 - ENGINE/ENGINE BLOCK/PISTON & CONNECTING ROD - REMOVAL)

(2) Remove No. 1 and No.2 piston rings (Fig. 76) from piston using a ring expander tool (Fig. 77).

(3) Remove upper oil ring side rail (Fig. 76).

(4) Remove lower oil ring side rail (Fig. 76).

(5) Remove oil ring expander (Fig. 76).

INSTALLATION

(1) Measure clearance of piston rings to the cylinder bore and piston. (Refer to 9 - ENGINE/ENGINE BLOCK/PISTON RINGS - STANDARD PROCEDURE)

CAUTION: Install piston rings in the following order:

- Oil ring expander.
- Upper oil ring side rail.
- Lower oil ring side rail.
- No. 2 Intermediate piston ring.
- No. 1 Upper piston ring.

(2) Install oil ring expander.

Install the side rail by placing one end between the piston ring groove and the oil ring expander. Hold end firmly and press down the portion to be installed until side rail is in position. **Do not use a piston ring expander during this step (Fig. 75).**

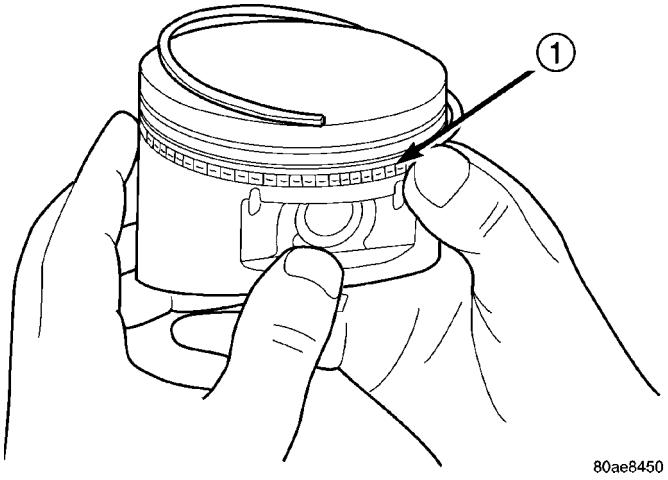

Fig. 75 SIDE RAIL - INSTALLATION

1 - SIDE RAIL END

PISTON RINGS (Continued)

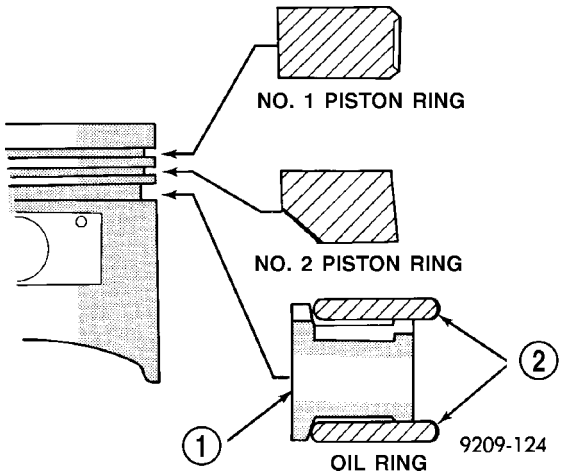

Fig. 76 PISTON RING - INSTALLATION

1 - SPACER EXPANDER
2 - SIDE RAIL

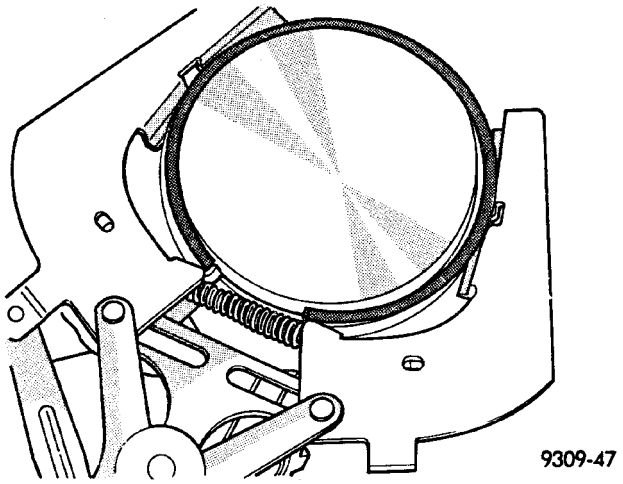

Fig. 77 UPPER AND INTERMEDIATE RINGS

(3) Install upper side rail first and then the lower side rail.

NOTE: The No. 1 and No. 2 piston rings have a different cross section. Ensure No. 2 ring is installed with manufacturers I.D. mark (dot) facing up, towards top of the piston (Fig. 76)

(4) Install No. 2 piston ring and then No. 1 piston ring (Fig. 77).

(5) Position piston ring end gaps as shown in (Fig. 78).

(6) Position oil ring expander gap at least 45° from the side rail gaps but **not** on the piston pin center or on the thrust direction. Staggering ring gap is important for oil control.

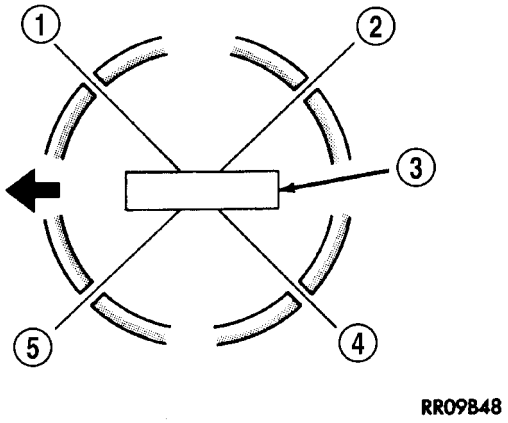

Fig. 78 PISTON RING END GAP POSITION

1 - SIDE RAIL UPPER
2 - NO. 1 RING GAP
3 - PISTON PIN
4 - SIDE RAIL LOWER
5 - NO. 2 RING GAP AND SPACER EXPANDER GAP

VIBRATION DAMPER

REMOVAL

(1) Disconnect negative battery cable.
(2) Raise vehicle on hoist.
(3) Remove right front wheel and belt splash shield.
(4) Remove accessory drive belts (Refer to 7 - COOLING/ACCESSORY DRIVE/DRIVE BELTS - REMOVAL).
(5) Remove damper bolt.
(6) Remove damper by using Special Tools 8194 Insert and 8454 Puller (Fig. 79).

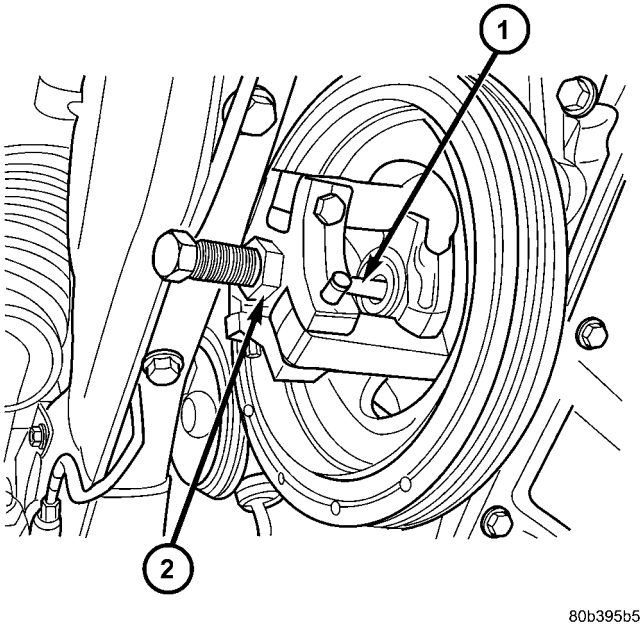

Fig. 79 VIBRATION DAMPER - REMOVAL

1 - SPECIAL TOOL 8454 PULLER
2 - SPECIAL TOOL 8194 INSERT

INSTALLATION

(1) Install damper using Special Tools 8179 Screw, with Nut and Thrust Bearing from 6792, and 6792-1 Installer (Fig. 80).
(2) Install damper center bolt. Tighten center bolt to 170 N·m (125 ft. lbs.).
(3) Install accessory drive belts (Refer to 7 - COOLING/ACCESSORY DRIVE/DRIVE BELTS - INSTALLATION).
(4) Install belt splash shield and right front wheel.
(5) Lower vehicle.
(6) Connect negative battery cable.

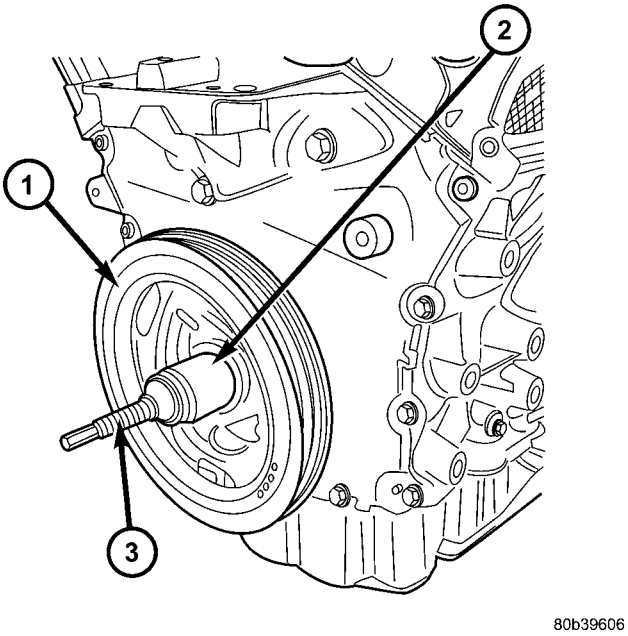

Fig. 80 VIBRATION DAMPER - INSTALLATION

1 - VIBRATION DAMPER
2 - SPECIAL TOOL 6792-1
3 - SPECIAL TOOL 8179

STRUCTURAL COLLAR

REMOVAL

(1) Raise vehicle on hoist.
(2) Remove bolts attaching structural collar to oil pan and transmission housing (Fig. 81).
(3) Remove collar (Fig. 81).

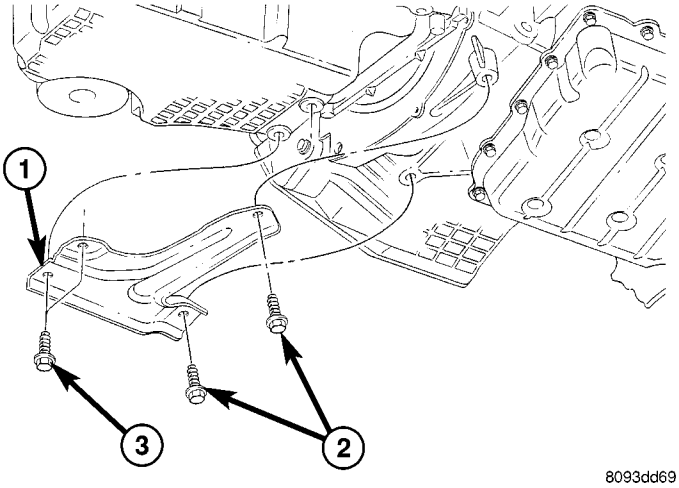

Fig. 81 Structural Collar (Note: cross-under pipe not shown)

1 - STRUCTURAL COLLAR
2 - BOLT (2) - COLLAR TO TRANSAXLE
3 - BOLT (2) - COLLAR TO OIL PAN

STRUCTURAL COLLAR (Continued)

INSTALLATION

CAUTION: The collar must be tightened using this service procedure, as damage to transaxle case and/or oil pan may occur.

(1) Position structural collar (Fig. 81) on oil pan and transaxle.
(2) Loosely install all bolts.
(3) Tighten the collar to oil pan bolts to 55 N·m (40 ft. lbs.).
(4) Tighten collar to transaxle bolts to 55 N·m (40 ft. lbs.).
(5) Lower vehicle.

ENGINE MOUNTING

ADJUSTMENTS

ENGINE SUPPORT ADJUSTMENT

The right and left support assemblies are slotted to allow for right/left drive train adjustment in relation to drive shaft assembly length.

Check and reposition right and left engine support assemblies as required. Adjust drive train position, if required, for the following conditions:

- Drive shaft distress: See Group 2, Suspension and Driveshaft.
- Any front end structural damage (after repair).
- Support Assembly replacement.

ENGINE SUPPORT ADJUSTMENT

(1) Remove the load on the engine motor mounts by carefully supporting the engine and transmission assembly with a floor jack.
(2) Loosen the right engine support assembly vertical fasteners.
(3) Loosen the left engine support assembly vertical bolts.
(4) Pry the engine right or left as required to achieve the proper drive shaft assembly length. Refer to Group 2, Suspension and Driveshaft for driveshaft identification and related assembly length measuring.
(5) Tighten right engine support assembly vertical bolts to 61 N·m (45 ft. lbs.). and tighten left engine support assembly bolts to 61 N·m (45 ft. lbs.).
(6) Recheck drive shaft length.

LEFT MOUNT

REMOVAL

(1) Disconnect negative battery cable.
(2) Remove throttle body air inlet hose and air cleaner housing assembly.
(3) Remove two nuts securing speed control servo bracket to left shock tower. Reposition servo.
(4) Support transmission with floor jack and wooden block.
(5) Remove the three vertical bolts from mount to transmission bracket (A) (Fig. 72).
(6) Slightly lower transmission with floor jack.
(7) Remove mount to frame rail fasteners (B) and remove mount (Fig. 72).

INSTALLATION

(1) Position mount to frame rail. Install mount to frame rail fasteners (B) (Fig. 82). Torque fasteners to 33 N·m (24 ft. lbs.).
(2) Raise transmission into position with floor jack.
(3) Install three vertical bolts from mount to transmission bracket (A) (Fig. 82). Torque fasteners to 61 N·m (45 ft. lbs.).
(4) Remove floor jack and wooden block.
(5) Install speed control servo to left shock tower. Torque fasteners to 6.7 N·m (60 in. lbs.)
(6) Install throttle body air inlet hose and air cleaner housing assembly.
(7) Connect negative battery cable.

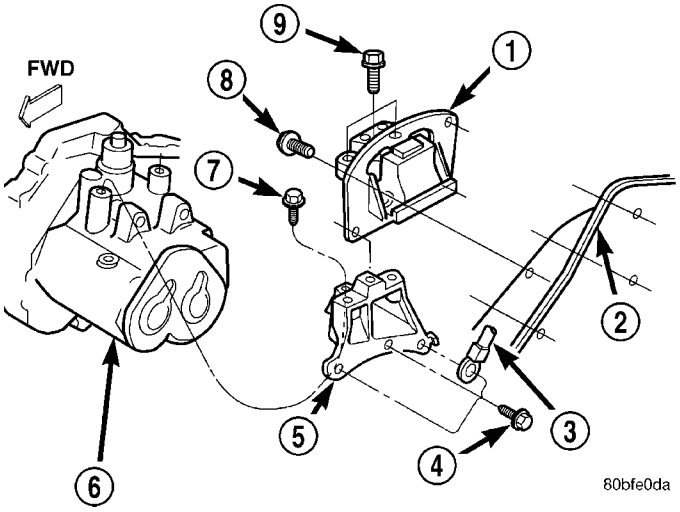

Fig. 82 Left Side Mount - Typical

1 - TRANSMISSION SUPPORT ASSEMBLY
2 - LEFT FRAME RAIL
3 - GROUND CABLE
4 - BOLT (D)
5 - TRANSMISSION BRACKET
6 - TRANSMISSION
7 - BOLT (C)
8 - BOLT (B)
9 - BOLT (A)

REAR MOUNT

REMOVAL

(1) Remove throttle body air inlet hose and air cleaner housing assembly.

(2) Remove three vertical bolts attaching rear mount bracket to transaxle case (Fig. 83).

(3) Raise vehicle on hoist.

(4) Remove rear mount bracket through bolt (Fig. 83).

(5) Remove horizontal bolt attaching rear mount bracket to transaxle case (Fig. 83).

(6) Remove mount bracket.

(7) Remove rear mount to suspension crossmember attaching bolts.

(8) Remove rear mount.

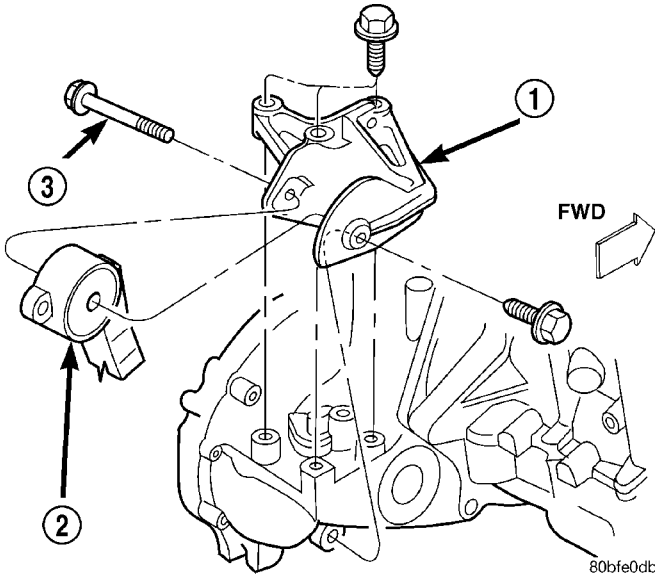

Fig. 83 Engine Mounting—Rear

1 - REAR TORQUE BRACKET
2 - REAR MOUNT
3 - THROUGH BOLT

INSTALLATION

(1) Position rear mount on suspension crossmember and loosely install bolts.

(2) Position mount bracket on transaxle and install bolts. Tighten to 110 N·m (80 ft. lbs.) (Fig. 73).

(3) Install rear mount to bracket through bolt and tighten to 61 N·m (45 ft. lbs.) (Fig. 73).

(4) Tighten rear mount to crossmember bolts to 61 N·m (45 ft. lbs.) (Fig. 73).

(5) Lower vehicle. Install throttle body air inlet hose and air cleaner housing assembly.

RIGHT MOUNT

REMOVAL

(1) Remove coolant pressure container (Refer to 7 - COOLING/ENGINE/COOLANT RECOVERY PRESS CONTAINER - REMOVAL).

(2) Remove heater tube front attaching screw.

(3) Raise vehicle on a hoist and remove inner splash shield.

(4) Remove heater tube rear attaching screw.

(5) Remove the right engine support assembly vertical fasteners from frame rail (Fig. 84).

(6) Lower vehicle. Remove the load on the engine motor mounts by carefully supporting the engine assembly with floor jack and wooden block on oil pan.

(7) Remove the bolts attaching the engine support assembly to the engine bracket (Fig. 84).

(8) Remove right engine mount.

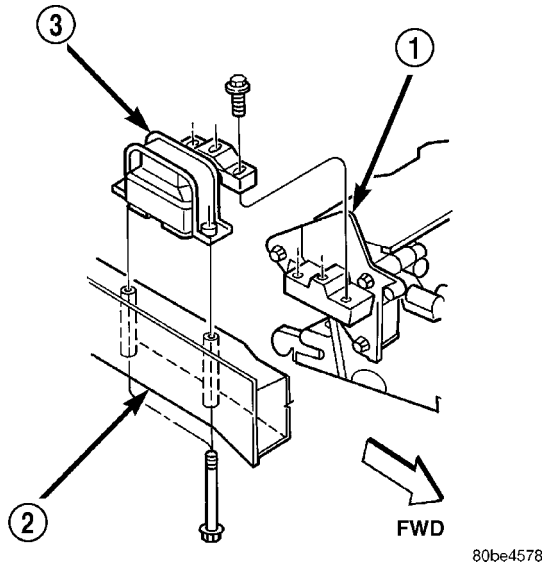

Fig. 84 Engine Mounting—Right Side

1 - ENGINE SUPPORT BRACKET
2 - FRAME RAIL
3 - RIGHT ENGINE MOUNT

INSTALLATION

(1) Position right engine mount and install frame rail to mount bolts. Tighten bolts to 61 N·m (45 ft. lbs.) (Fig. 84).

(2) Install the mount to engine support bracket bolts and tighten to 61 N·m (45 ft. lbs.) (Fig. 84).

(3) Raise vehicle on a hoist.

(4) Install heater tube rear attaching screw.

(5) Install inner splash shield and lower vehicle.

(6) Install heater tube front attaching screw.

(7) Install coolant bottle (Refer to 7 - COOLING/ENGINE/COOLANT RECOVERY PRESS CONTAINER - INSTALLATION).

FRONT MOUNT

REMOVAL

(1) Raise vehicle.

(2) Remove front mount to bracket horizontal through bolt (Fig. 85).

(3) Remove front mount vertical bolts (Fig. 85).

(4) Remove front mount.

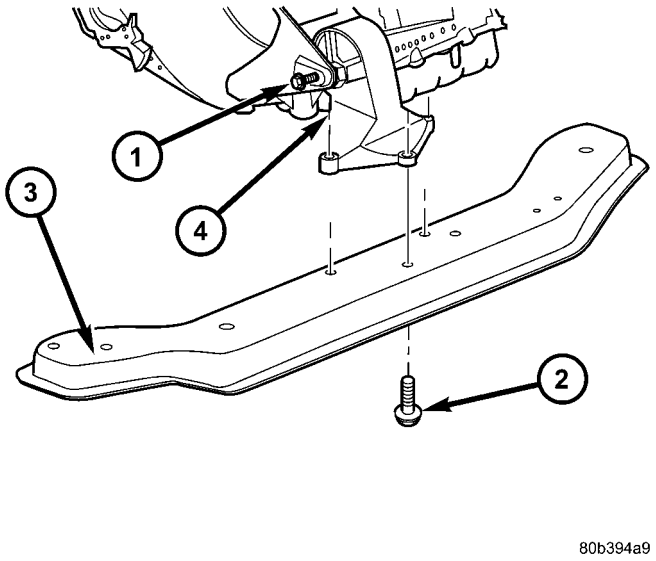

Fig. 85 FRONT ENGINE MOUNT

1 - HORIZONTAL THROUGH BOLT
2 - VERTICAL BOLT(S)
3 - LOWER RADIATOR CROSSMEMBER
4 - FRONT ENGINE MOUNT

INSTALLATION

(1) Position front mount on lower radiator cross-member.

(2) Loose install front mount to bracket through bolt.

(3) Install front mount vertical bolts. Tighten bolts to 61 N·m (45 ft. lbs.) (Fig. 75).

(4) Tighten horizontal through bolt to 61 N·m (45 ft. lbs.) (Fig. 75).

(5) Lower vehicle.

LUBRICATION

DESCRIPTION

The lubrication system is a full-flow filtration, pressure feed type. The oil pump body is mounted to the engine block. The pump inner rotor is driven by the crankshaft. A structural windage tray is used to increase power by minimizing oil windage at high engine RPM. An engine oil cooler is used on some models.

OPERATION

Oil from the oil pan is pumped by a geroter type oil pump directly coupled to the crankshaft (Fig. 86). Oil pressure is controlled by a relief valve mounted inside the oil pump housing. See (Fig. 86), (Fig. 87), and (Fig. 88) for engine oil lubrication circuits.

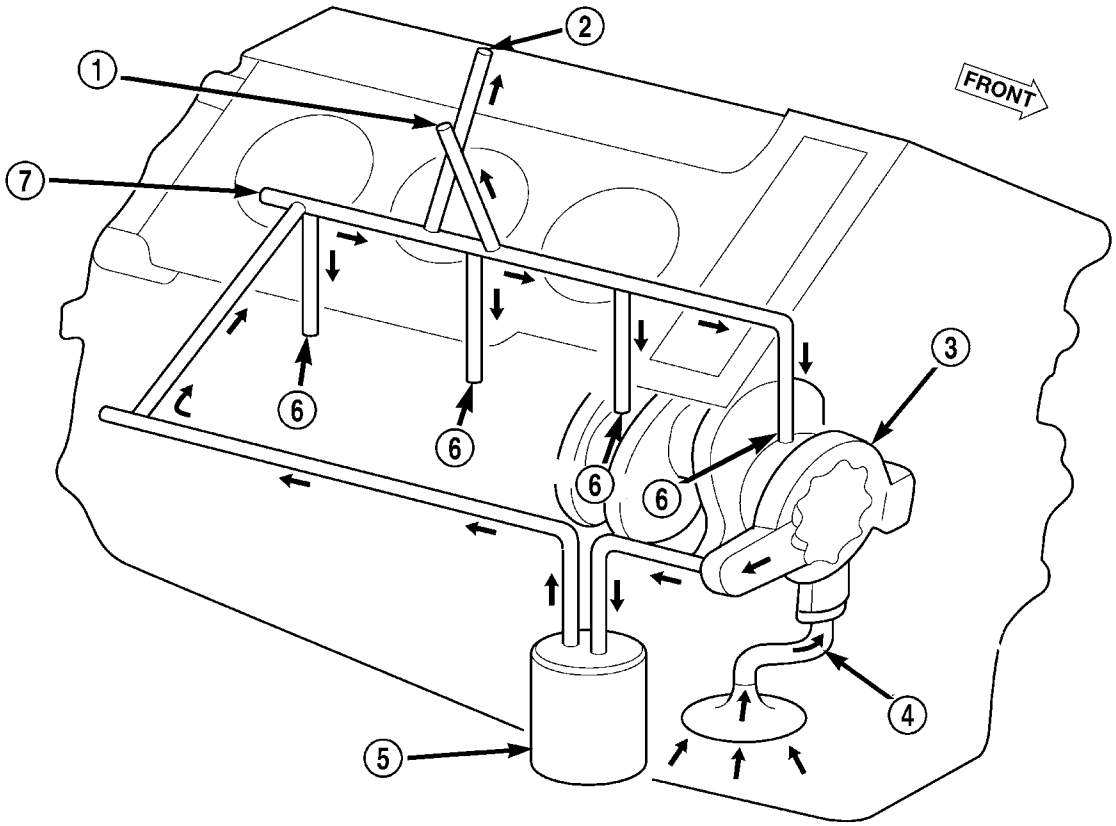

80ae83e9

Fig. 86 Cylinder Block Oil Lubrication System

1 - TO RIGHT CYLINDER HEAD
2 - TO LEFT CYLINDER HEAD
3 - OIL PUMP
4 - OIL PICKUP TUBE
5 - OIL FILTER
6 - TO CRANKSHAFT MAIN JOURNALS
7 - MAIN OIL GALLERY

FROM:	TO:	FROM:	TO:
Oil Pump	Oil Filter Mounting (inlet)	Main Oil Gallery - Center of Block	1. Crankshaft Main Bearings
Oil Filter Mounting (inlet)	Oil Filter		2. Left Cylinder Head*
Oil Filter	Oil Filter Mounting (outlet)		3. Right Cylinder Head*
Oil Filter Mounting (outlet)	Oil Gallery - Right side of Block	Crankshaft Main Bearings	Connecting Rod Bearings
Oil Gallery - Right side of Block	Oil Gallery - Rear of Block and to Oil Cooler (some models)	Left Cylinder Head	Refer to 87
Oil Gallery - Rear of Block	Main Oil Gallery - Center of Block	Right Cylinder Head	Refer to 88
*The cylinder head gaskets have an oil restrictor to control oil flow to the cylinder heads.			

LUBRICATION (Continued)

LEFT CYLINDER HEAD

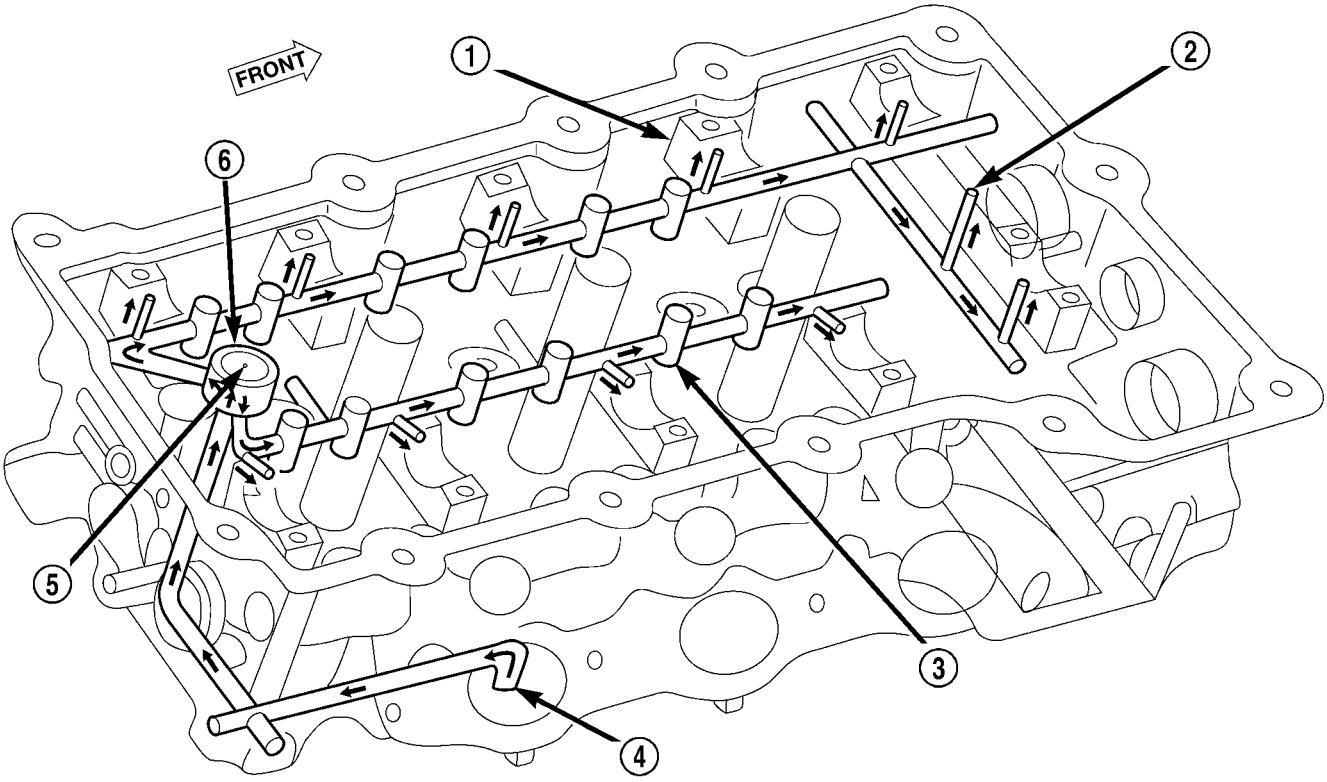

80b2b703

Fig. 87 Cylinder Head Oil Lubrication System - Left Side

1 - CAM JOURNALS
2 - OIL FEED TO CAMSHAFT (SECONDARY) CHAIN TENSIONER
3 - LASH ADJUSTER BORES
4 - OIL FEED FROM BLOCK
5 - VENT HOLE
6 - ACCUMULATOR

FROM:	TO:
Left Cylinder Head Oil Inlet Gallery (intake side of head)	Oil Gallery and Accumulator – Rear of Head*
Oil Gallery and Accumulator – Rear of Head*	1. Exhaust Camshaft Oil Passage 2. Intake Camshaft Oil Passage
Left Exhaust Camshaft Oil Passage	1. Left Exhaust Camshaft Journals 2. Hydraulic Valve Lash Adjusters and Rocker Arms 3. Left Camshaft (Secondary) Chain Tensioner**
Left Intake Camshaft Oil Passage	1. Left Intake Camshaft Journals 2. Hydraulic Valve Lash Adjusters and Rocker Arms
* When oil reaches the back of the cylinder head, the oil gallery feeds oil into an accumulator chamber that is located towards center of the head. The accumulator chamber is closed off with a pressed in core plug that has a small orifice to act as a vent. Oil then travels down at a 45 degree angle from the accumulator into two passages, one for the intake and one for the exhaust side of the cylinder head.	
** The secondary camshaft chain tensioner is the last component to receive oil on the left cylinder head.	

LUBRICATION (Continued)

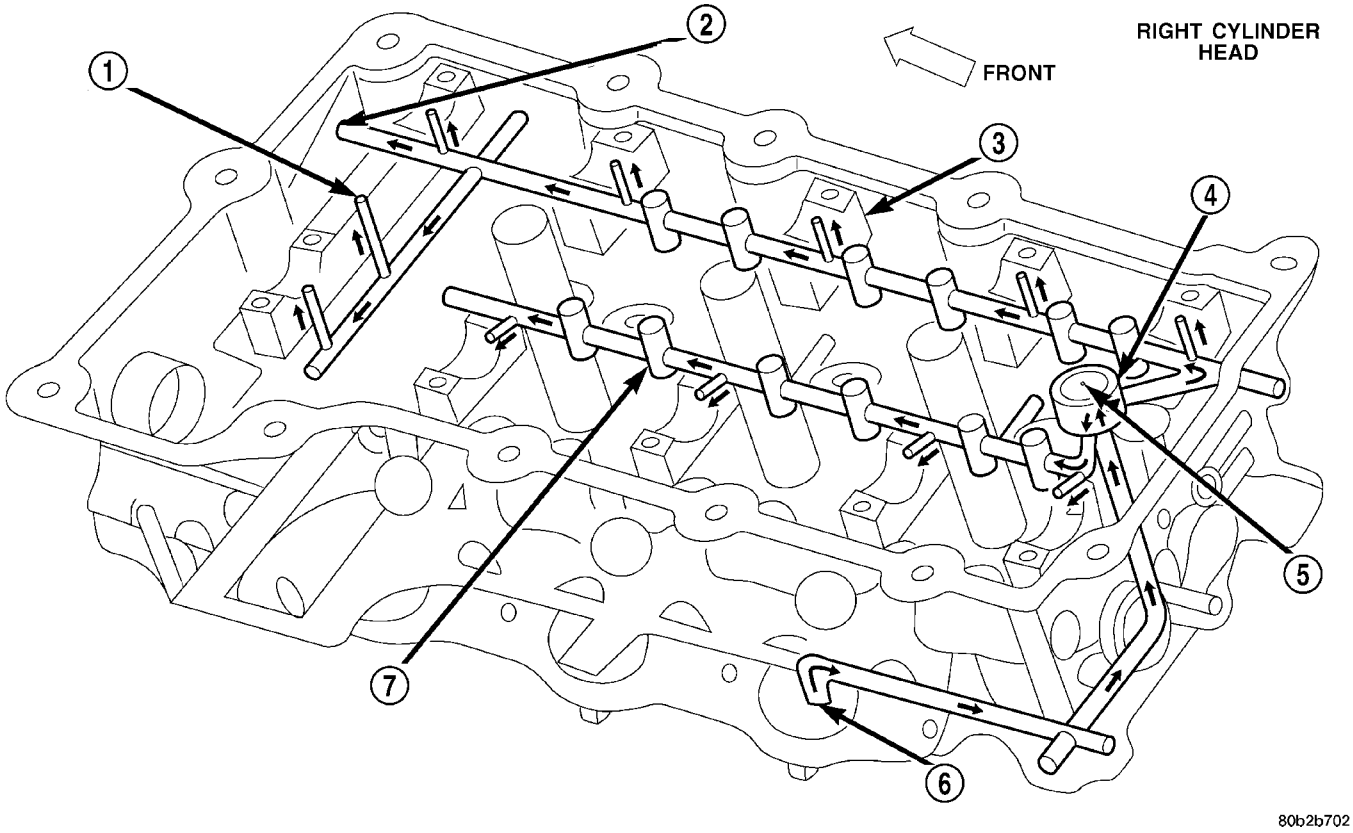

Fig. 88 Cylinder Head Oil Lubrication System - Right Side

1 - OIL FEED TO CAMSHAFT (SECONDARY) CHAIN TENSIONER
2 - OIL FEED TO TIMING CHAIN (PRIMARY) TENSIONER
3 - CAM JOURNALS
4 - ACCUMULATOR
5 - VENT HOLE
6 - OIL FEED FROM BLOCK
7 - LASH ADJUSTOR BORES

FROM:	TO:
Right Cylinder Head Oil Inlet Gallery (intake side of head)	Oil Gallery and Accumulator – Rear of Head*
Oil Gallery and Accumulator – Rear of Head*	1. Exhaust Camshaft Oil Passage 2. Intake Camshaft Oil Passage
Right Exhaust Camshaft Oil Passage	1. Right Exhaust Camshaft Journals 2. Hydraulic Valve Lash Adjusters and Rocker Arms 3. Right Camshaft (Secondary) Chain Tensioner 4. Primary Timing Chain Tensioner - Right Head**
Right Intake Camshaft Oil Passage	1. Right Intake Camshaft Journals 2. Hydraulic Valve Lash Adjusters and Rocker Arms
* When oil reaches the back of the cylinder head, the oil gallery feeds oil into an accumulator chamber that is located towards center of the head. The accumulator chamber is closed off with a pressed in core plug that has a small orifice to act as a vent. Oil then travels down at a 45 degree angle from the accumulator into two passages, one for the intake and one for the exhaust side of the cylinder head.	
** The timing (primary) chain tensioner is the last component to receive oil on the right cylinder head.	

LUBRICATION (Continued)

DIAGNOSIS AND TESTING - CHECKING ENGINE OIL PRESSURE

(1) Remove the oil pressure switch. (Refer to 9 - ENGINE/LUBRICATION/OIL PRESSURE SENSOR/ SWITCH - REMOVAL)

(2) Install oil pressure test gauge assembly, Special Tools C-3292 with 8406 adaptor.

(3) Start engine and monitor gauge readings.

CAUTION: If oil pressure is 0 at idle, Do Not Run engine at 3000 RPM

(4) Oil Pressure (engine at operating temperature): **Curb Idle** 34.5 kPa (5 psi) minimum **3000 RPM** 300–724 kPa (45–105 psi).

(5) If oil pressure is 0 at idle. Shut off engine, check for pressure relief valve stuck open or a clogged oil pickup screen.

(6) Install oil pressure switch after testing is completed. (Refer to 9 - ENGINE/LUBRICATION/OIL PRESSURE SENSOR/SWITCH - INSTALLATION)

OIL

DESCRIPTION

For engine oil type and capacity (Refer to LUBRICATION & MAINTENANCE/FLUID TYPES - DESCRIPTION - ENGINE OIL)

STANDARD PROCEDURE

STANDARD PROCEDURE - ENGINE OIL AND FILTER CHANGE

WARNING: NEW OR USED ENGINE OIL CAN BE IRRITATING TO THE SKIN. AVOID PROLONGED OR REPEATED SKIN CONTACT WITH ENGINE OIL. CONTAMINANTS IN USED ENGINE OIL, CAUSED BY INTERNAL COMBUSTION, CAN BE HAZARDOUS TO YOUR HEALTH. THOROUGHLY WASH EXPOSED SKIN WITH SOAP AND WATER. DO NOT WASH SKIN WITH GASOLINE, DIESEL FUEL, THINNER, OR SOLVENTS, HEALTH PROBLEMS CAN RESULT. DO NOT POLLUTE, DISPOSE OF USED ENGINE OIL PROPERLY. CONTACT YOUR DEALER OR GOVERNMENT AGENCY FOR LOCATION OF COLLECTION CENTER IN YOUR AREA.

Change engine oil and filter at mileage and time intervals described in the Maintenance Schedule. (Refer to LUBRICATION & MAINTENANCE/MAINTENANCE SCHEDULES - DESCRIPTION)

TO CHANGE ENGINE OIL

(1) Run engine until achieving normal operating temperature.

(2) Position the vehicle on a level surface and turn engine off.

(3) Hoist and support vehicle on safety stands. (Refer to LUBRICATION & MAINTENANCE/HOISTING - STANDARD PROCEDURE)

(4) Remove oil fill cap (Fig. 89).

(5) Place a suitable drain pan under crankcase drain.

(6) Remove drain plug from crankcase and allow oil to drain into pan. Inspect drain plug threads for stretching or other damage. Replace drain plug and gasket if damaged.

(7) Remove oil filter. Refer to (Refer to 9 - ENGINE/LUBRICATION/OIL FILTER - REMOVAL)

(8) Install drain plug in crankcase.

(9) Install new oil filter. Refer to (Refer to 9 - ENGINE/LUBRICATION/OIL FILTER - INSTALLATION)

(10) Lower vehicle and fill crankcase with specified type and amount of engine oil, (Fig. 89). (Refer to LUBRICATION & MAINTENANCE/FLUID TYPES - DESCRIPTION - ENGINE OIL) (Refer to LUBRICATION & MAINTENANCE - SPECIFICATIONS)

(11) Install oil fill cap.

(12) Start engine and inspect for leaks.

(13) Stop engine and inspect oil level.

OIL FILTER SPECIFICATION

All engines are equipped with a high quality full-flow, disposable type oil filter. When replacing oil filter, use a Mopar® filter or equivalent.

USED ENGINE OIL DISPOSAL

Care should be exercised when disposing used engine oil after it has been drained from a vehicle engine. Refer to the WARNING listed above.

OIL (Continued)

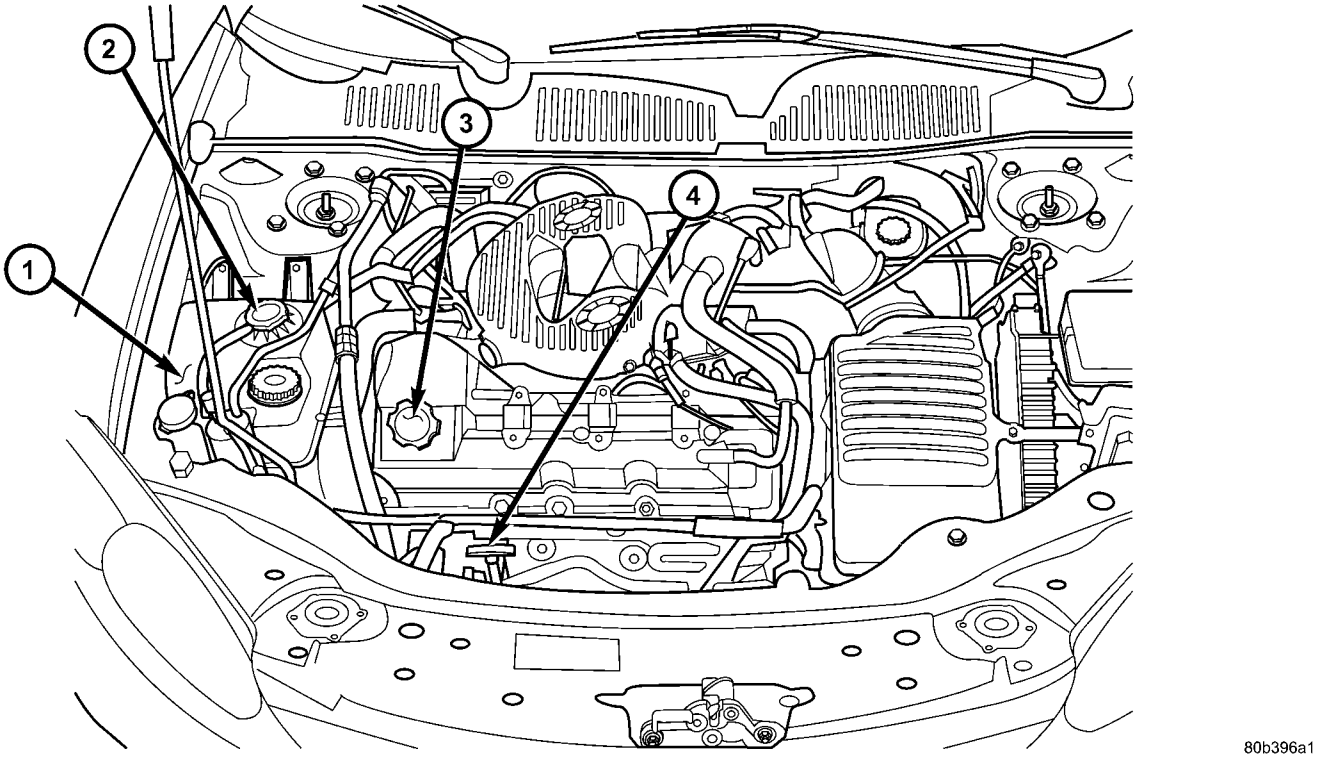

Fig. 89 Fluid Level Check - 2.7L

1 - COOLANT PRESSURE CONTAINER
2 - COOLANT PRESSURE CAP
3 - ENGINE OIL FILL
4 - ENGINE OIL DIPSTICK

STANDARD PROCEDURE - ENGINE OIL LEVEL CHECK

The best time to check engine oil level is after it has sat overnight, or if the engine has been running, allow the engine to be shut off for at least 5 minutes before checking oil level.

Checking the oil while the vehicle is on level ground will improve the accuracy of the oil level reading (Fig. 89). Add only when the level is at or below the ADD mark.

OIL FILTER

REMOVAL

(1) Raise vehicle on hoist.

(2) Position a suitable collecting container under oil filter location (Fig. 90).

(3) Remove oil filter using a suitable oil filter wrench (Fig. 90). Dispose of oil filter following enviromental guidelines.

INSTALLATION

(1) Wipe filter base clean, then inspect gasket sealing surface.

(2) Lubricate gasket of new filter with clean engine oil.

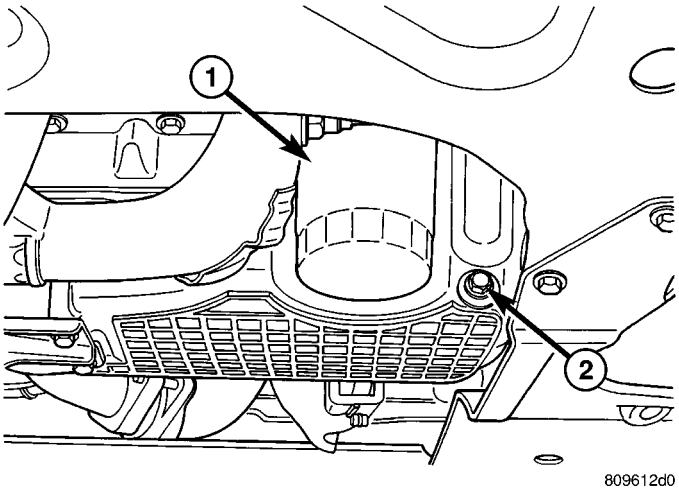

Fig. 90 Engine Oil Filter

1 - OIL FILTER
2 - OIL DRAIN PLUG

(3) Install oil filter (Fig. 90) and tighten to 16 N·m (12 ft. lbs.) of torque after gasket contacts base. Use filter wrench if necessary.

(4) Fill crankcase with proper engine oil to correct level if drained. Start engine and check for leaks.

OIL PAN

REMOVAL

(1) Disconnect negative battery cable.
(2) Remove engine oil dipstick and tube.
(3) Raise vehicle on hoist.
(4) Drain engine oil and remove oil filter.
(5) Remove structural collar (Fig. 91) (Refer to 9 - ENGINE/ENGINE BLOCK/STRUCTURAL COVER - REMOVAL).

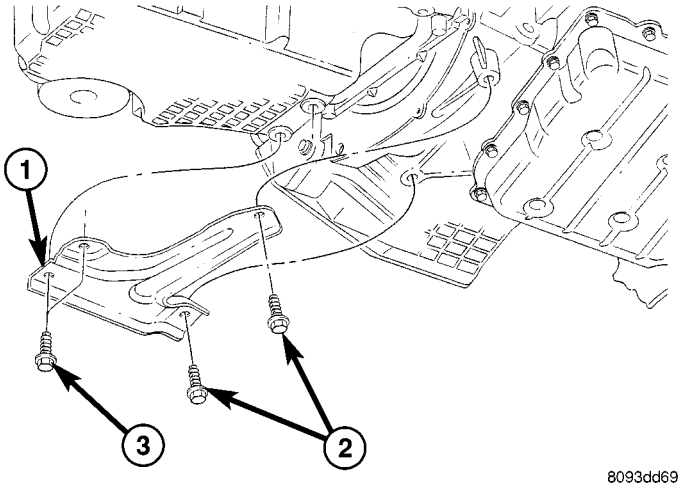

Fig. 91 Structural Collar (Note: cross-under pipe not shown)

1 - STRUCTURAL COLLAR
2 - BOLT (2) - COLLAR TO TRANSAXLE
3 - BOLT (2) - COLLAR TO OIL PAN

(6) Remove exhaust cross-under pipe (Refer to 11 - EXHAUST SYSTEM/CROSS-OVER PIPE - REMOVAL).
(7) Remove torque converter housing cover.
(8) Remove lower bolt attaching the A/C compressor to oil pan.

CAUTION: Assure removal of the two bolts attaching the timing cover to the oil pan, as damage to the timing cover and/or oil pan may occur.

(9) Remove oil pan attaching fasteners. Remove oil pan and gasket (Fig. 92).

INSTALLATION

(1) Clean oil pan and sealing surfaces. Inspect oil pan and timing chain cover gaskets. Replace as necessary.
(2) Apply an 1/8 inch bead of Mopar® Engine RTV GEN II to the front T-joints (oil pan gasket to timing cover gasket interface) and the rear T-joints (oil pan gasket to crankshaft rear oil seal retainer gasket interface) (Fig. 92).
(3) Install oil pan gasket to block.

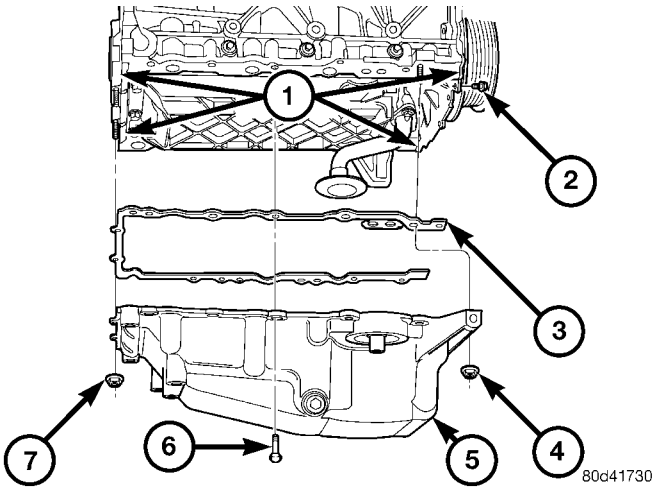

Fig. 92 Oil Pan and Sealing

1 - SEALER LOCATION
2 - BOLT-M6
3 - GASKET
4 - NUT-M6
5 - OIL PAN
6 - BOLT-M8
7 - NUT-M6

NOTE: To prevent oil leaks at oil pan to timing chain cover, the following tightening sequence procedure must be performed.

(4) Install oil pan and fasteners (Fig. 92) using the following tightening sequence:
(a) Install oil pan bolts and nuts **finger tight only—just tight enough to compress the gasket's rubber seal**.
(b) Install timing chain cover to pan bolts and tighten to 12 N·m (105 in. lbs.).
(c) Tighten oil pan bolts to 28 N·m (250 in. lbs.).
(d) Tighten oil pan nuts to 12 N·m (105 in. lbs.).
(5) Install lower bolt attaching the A/C compressor to oil pan. Tighten bolt to 28 N·m (21 ft. lbs.).
(6) Install torque converter housing cover.
(7) Install oil filter and drain plug.
(8) Install exhaust cross-under pipe(Refer to 11 - EXHAUST SYSTEM/CROSS-OVER PIPE - INSTALLATION).
(9) Install structural collar (Fig. 91)(Refer to 9 - ENGINE/ENGINE BLOCK/STRUCTURAL COVER - INSTALLATION).
(10) Lower vehicle.
(11) Install engine oil dipstick and tube.
(12) Fill engine crankcase with proper oil to correct level.
(13) Connect negative battery cable.

OIL PRESSURE RELIEF VALVE

REMOVAL

(1) Remove the oil pan. (Refer to 9 - ENGINE/LUBRICATION/OIL PAN - REMOVAL)

(2) Remove the pressure relief valve by remove the threaded retaining cap from the oil pump housing.

CAUTION: Oil pump pressure relief valve must be installed as shown in (Fig. 93) or engine damage may occur.

(3) Remove spring and relief valve (Fig. 93).

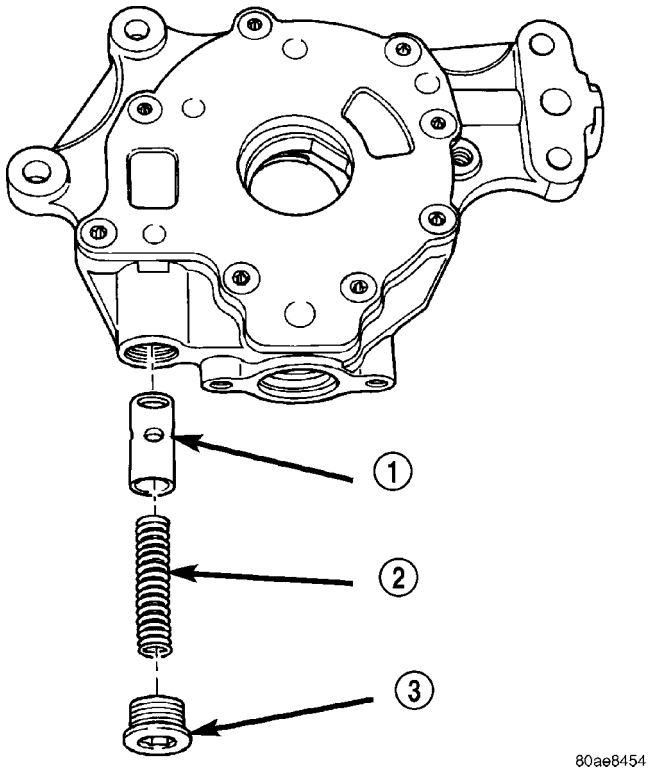

Fig. 93 Oil Pressure Relief Valve

1 - RELIEF VALVE
2 - SPRING
3 - RETAINER CAP

INSTALLATION

(1) Lubricate relief valve with oil.

CAUTION: The pressure relief valve must be installed as shown in (Fig. 93), or engine damage may occur.

(2) Install relief valve, spring and retainer cap (Fig. 93). Tighten cap to 12 N·m (105 in. lbs.).

(3) Install the oil pan. (Refer to 9 - ENGINE/LUBRICATION/OIL PAN - INSTALLATION)

OIL PRESSURE SWITCH

DESCRIPTION

The engine oil pressure switch is located on the right side of the engine block. The switch screws into the engine main oil gallery. The normally closed switch provides an input through a single wire to the low pressure indicator light on the instrument cluster.

REMOVAL

(1) Raise vehicle on hoist.

(2) Remove heat shield that covers oil pressure switch.

(3) Disconnect oil pressure switch electrical connector.

(4) Position an oil collecting container under switch location.

(5) Remove switch by unscrewing from the engine block.

INSTALLATION

(1) Apply Mopar® Thread Sealant to the switch threads.

(2) Install oil pressure switch.

(3) Connect electrical connector.

(4) Install oil pressure switch heat shield.

(5) Lower vehicle.

(6) Start engine and check for leaks.

(7) Check engine oil level and adjust as neccessary.

OIL PUMP

REMOVAL

The oil pump pressure relief valve can be serviced by removing the oil pan.

(1) Remove crankshaft vibration damper. (Refer to 9 - ENGINE/ENGINE BLOCK/VIBRATION DAMPER - REMOVAL)

(2) Remove timing chain cover. (Refer to 9 - ENGINE/VALVE TIMING/TIMING BELT / CHAIN COVER(S) - REMOVAL)

(3) Remove timing chain and sprockets. (Refer to 9 - ENGINE/VALVE TIMING/TIMING BELT/CHAIN AND SPROCKETS - REMOVAL)

(4) Remove oil pan. (Refer to 9 - ENGINE/LUBRICATION/OIL PAN - REMOVAL)

(5) Remove oil pick-up tube and O-ring (Fig. 95).

(6) Ensure that crankshaft position is at 60° ATDC of No.1 cylinder, or crankshaft sprocket mark aligns with mark on oil pump (Fig. 94). This position will properly locate oil pump upon installation.

(7) Remove oil pump attaching bolts (Fig. 95).

(8) Remove oil pump.

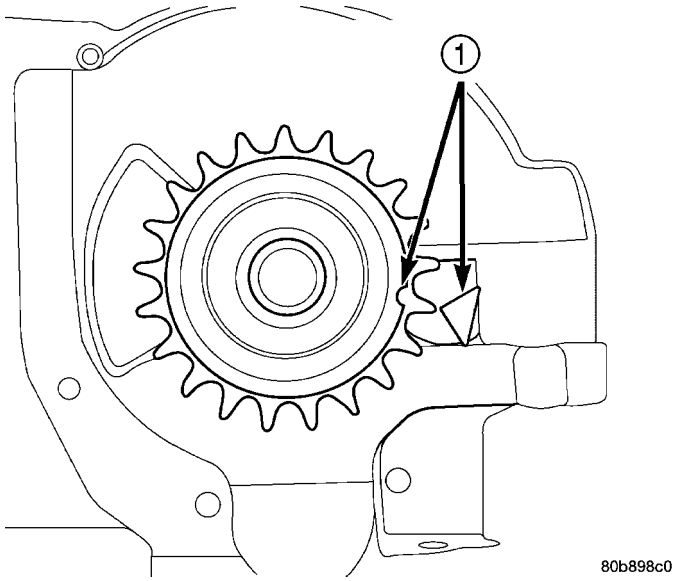

Fig. 94 Crankshaft Positioned At 60 DEGREES ATDC No.1 Cylinder

1 - CRANKSHAFT POSITION = 60° ATDC NO. 1 CYLINDER

DISASSEMBLY

(1) Remove the pressure relief valve by remove the threaded retaining cap from the oil pump housing.

CAUTION: Oil pump pressure relief valve must be installed as shown in (Fig. 96) or engine damage may occur.

(2) Remove spring and relief valve.

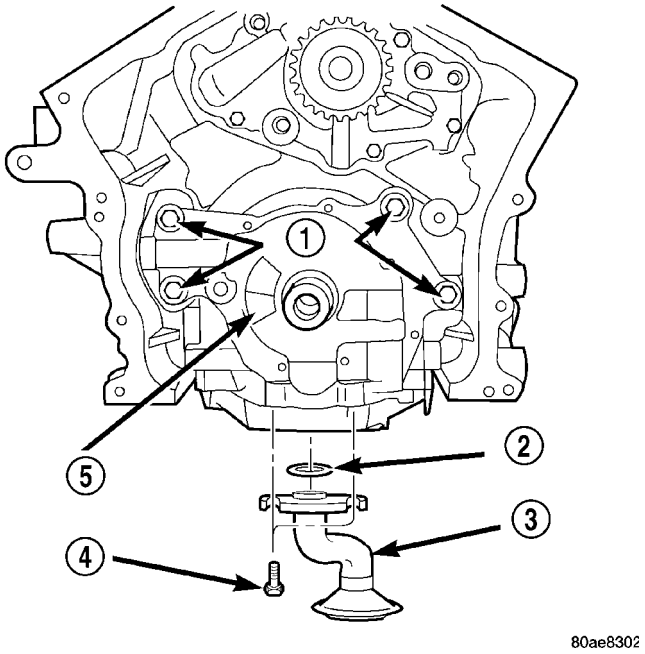

Fig. 95 Oil Pump and Pick-up Tube

1 - BOLTS
2 - O-RING
3 - PICK-UP TUBE
4 - BOLT
5 - OIL PUMP

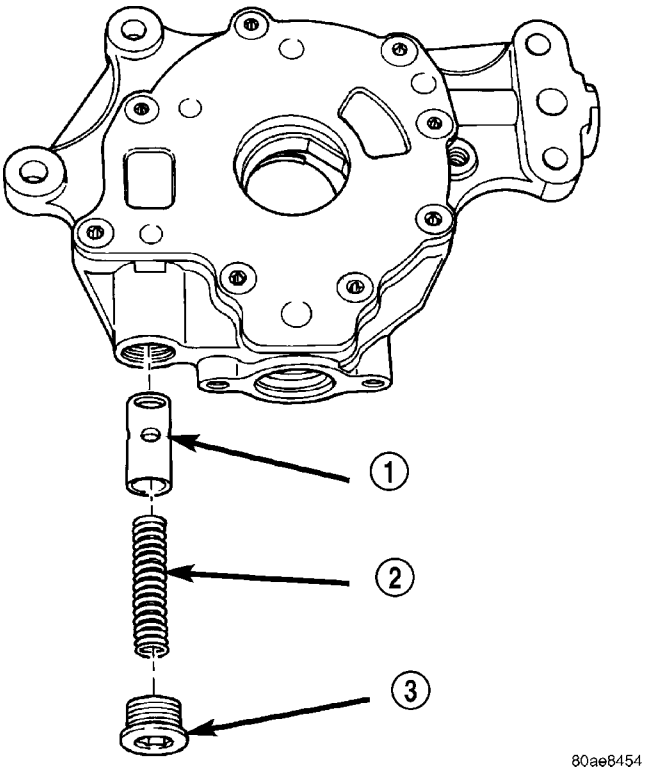

Fig. 96 Oil Pressure Relief Valve

1 - RELIEF VALVE
2 - SPRING
3 - RETAINER CAP

OIL PUMP (Continued)

(3) Remove oil pump cover screws and lift off cover plate (Fig. 97).

(4) Remove pump rotors.

(5) Wash all parts in a suitable solvent.

(6) Inspect components carefully for damage or wear. (Refer to 9 - ENGINE/LUBRICATION/OIL PUMP - INSPECTION)

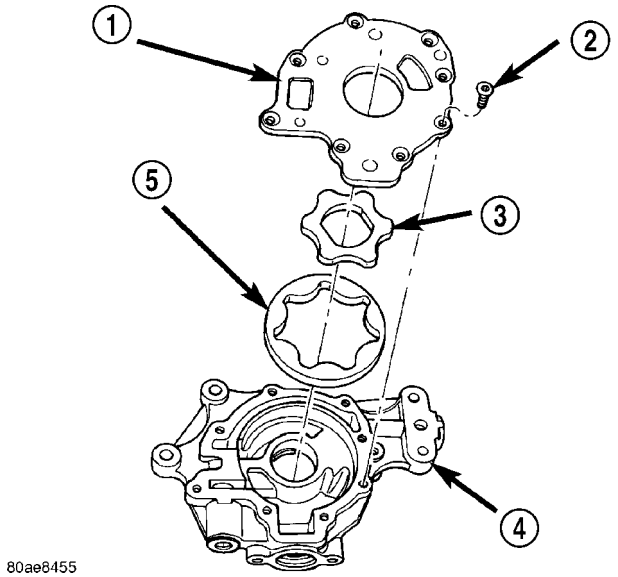

Fig. 97 Oil Pump

1 - OIL PUMP COVER
2 - SCREWS (8)
3 - OIL PUMP INNER ROTOR
4 - OIL PUMP HOUSING
5 - OIL PUMP OUTER ROTOR

CLEANING

(1) Clean all parts thoroughly in a suitable solvent.

INSPECTION

(1) Disassemble the oil pump. (Refer to 9 - ENGINE/LUBRICATION/OIL PUMP - DISASSEMBLY)

(2) Clean all oil pump components. (Refer to 9 - ENGINE/LUBRICATION/OIL PUMP - CLEANING)

(3) Inspect mating surface of the oil pump housing and cover. Replace oil pump if deeply scratched or grooved (minor surface scratches and polishing is normal).

(4) Lay a straightedge across the pump cover surface (Fig. 98). If a 0.025 mm (0.001 in.) feeler gauge can be inserted between cover and straight edge, cover should be replaced.

(5) Measure thickness and diameter of outer rotor. If outer rotor thickness measures 9.474 mm (0.373 in.) or less (Fig. 99), or if the diameter is 89.174 mm (3.5108 in.) or less, replace outer rotor.

(6) If inner rotor measures 9.474 mm (0.373 in.) or less replace inner rotor (Fig. 100).

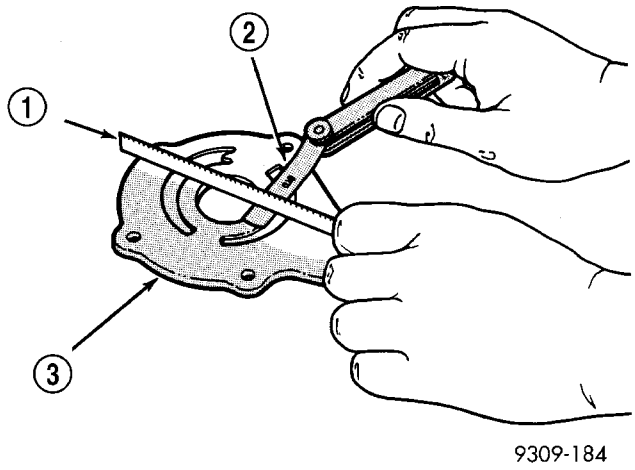

Fig. 98 CHECKING OIL PUMP COVER FLATNESS - TYPICAL

1 - STRAIGHT EDGE
2 - FEELER GAUGE
3 - OIL PUMP COVER

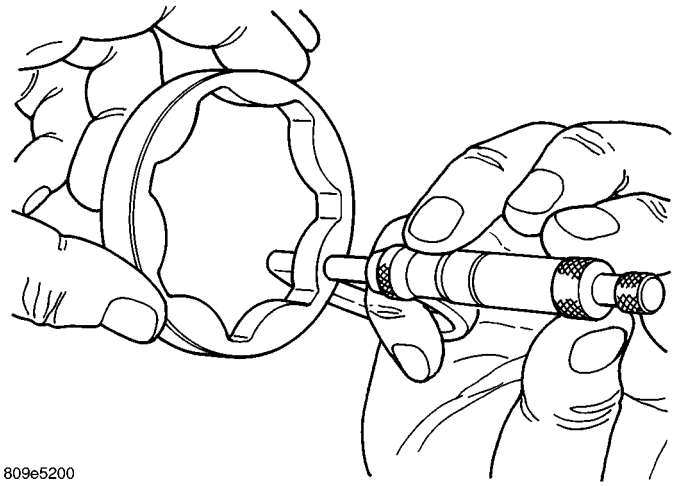

Fig. 99 MEASURING OUTER ROTOR THICKNESS

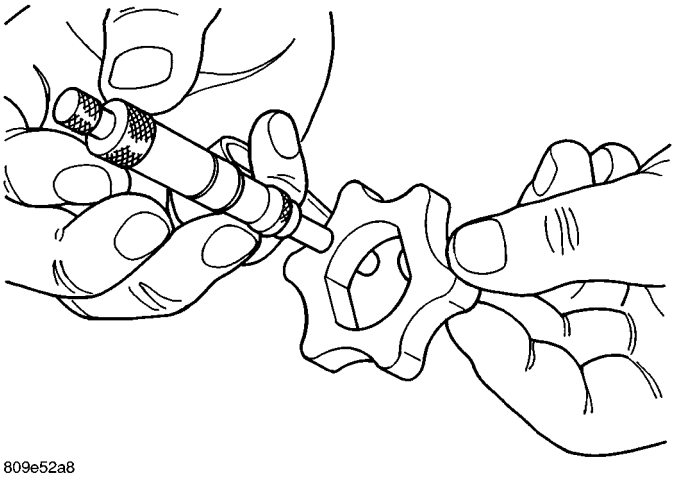

Fig. 100 MEASURING INNER ROTOR THICKNESS

OIL PUMP (Continued)

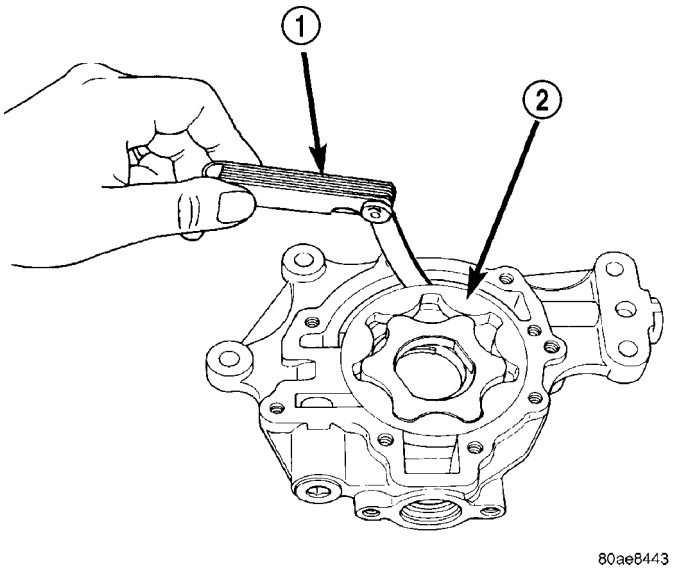

Fig. 101 MEASURING OUTER ROTOR CLEARANCE IN HOUSING

1 - FEELER GAUGE
2 - OUTER ROTOR

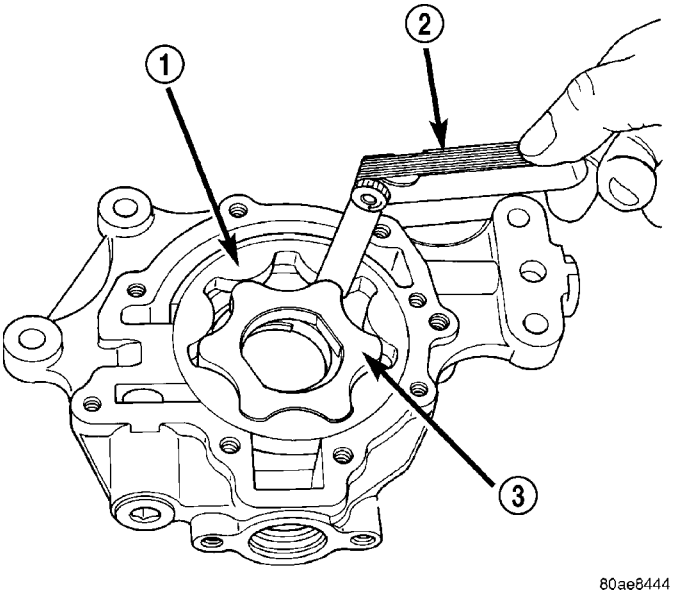

Fig. 102 MEASURING CLEARANCE BETWEEN ROTORS

1 - OUTER ROTOR
2 - FEELER GAUGE
3 - INNER ROTOR

(7) Slide outer rotor into body, press to one side with fingers and measure clearance between rotor and body (Fig. 101). If measurement is 0.39 mm (0.015 in.) or more, replace body only if outer rotor is in specifications.

(8) Install inner rotor into body. If clearance between inner and outer rotors (Fig. 102) is 0.20 mm (0.008 in.) or more, replace both rotors.

(9) Place a straightedge across the face of the body, between bolt holes. If a feeler gauge of 0.077 mm (0.003 in.) or more can be inserted between rotors and the straightedge, replace pump assembly (Fig. 103) **ONLY** if rotors are in specification.

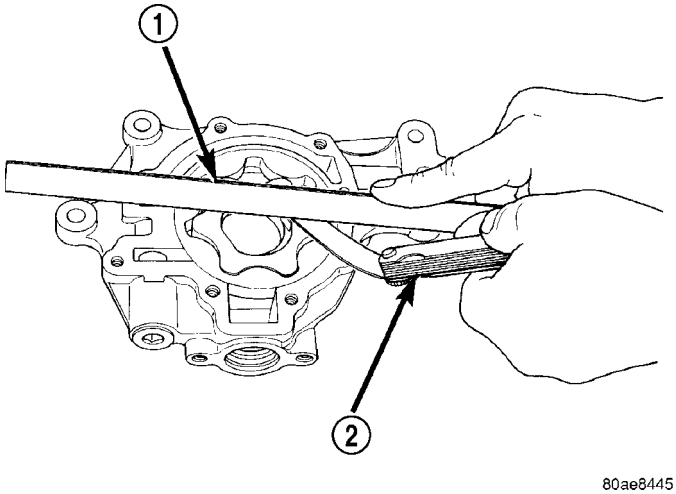

Fig. 103 MEASURING CLEARANCE OVER ROTORS

1 - STRAIGHT EDGE
2 - FEELER GAUGE

(10) Inspect oil pressure relief valve plunger for scoring and free operation in its bore. Small marks may be removed with 400-grit wet or dry sandpaper.

(11) The relief valve spring has a free length of approximately 49.5 mm (1.95 in.) it should test between 23 – 25 pounds when compressed to 34 mm (1.34 in.). Replace spring that fails to meet specifications.

(12) Assemble oil pump. (Refer to 9 - ENGINE/LUBRICATION/OIL PUMP - ASSEMBLY)

ASSEMBLY

(1) Assemble pump using new parts as required.

(2) Tighten cover screws to 12 N·m (105 in. lbs.) (Fig. 97).

(3) Tighten oil pressure relief valve retaining cap to 12 N·m (105 in. lbs.) (Fig. 96).

(4) Prime oil pump before installation by filling rotor cavity with engine oil.

INSTALLATION

CAUTION: Crankshaft position must be at 60° ATDC of No.1 cylinder before installing oil pump (Fig. 94). This position will properly locate oil pump. If not properly located, severe damage to oil pump can occur.

(1) Prime oil pump before installation by filling rotor cavity with engine oil.

OIL PUMP (Continued)

(2) If crankshaft has been rotated, it must be repositioned to 60° ATDC of No.1 cylinder prior to oil pump installation (Fig. 94).

(3) Install oil pump carefully over crankshaft and into position.

(4) Install oil pump attaching bolts. Tighten bolts to 28 N·m (250 in. lbs.) (Fig. 95).

(5) Install oil pick-up tube with new O-ring. Lubricate O-ring before installation. Tighten attaching bolts to 28 N·m (250 in. lbs.) (Fig. 95).

(6) Install oil pan. (Refer to 9 - ENGINE/LUBRICATION/OIL PAN - INSTALLATION)

(7) Install timing chain and sprockets. (Refer to 9 - ENGINE/VALVE TIMING/TIMING BELT/CHAIN AND SPROCKETS - INSTALLATION)

(8) Install timing chain cover. (Refer to 9 - ENGINE/VALVE TIMING/TIMING BELT / CHAIN COVER(S) - INSTALLATION)

(9) Install crankshaft vibration damper. (Refer to 9 - ENGINE/ENGINE BLOCK/VIBRATION DAMPER - INSTALLATION)

(10) Fill crankcase with engine oil to correct level.

INTAKE MANIFOLD

DIAGNOSIS AND TESTING - INTAKE MANIFOLD LEAKS

An intake manifold air leak is characterized by lower than normal manifold vacuum. Also, one or more cylinders may not be functioning.

WARNING: USE EXTREME CAUTION WHEN THE ENGINE IS OPERATING. DO NOT STAND IN A DIRECT LINE WITH THE FAN. DO NOT PUT YOUR HANDS NEAR THE PULLEYS, BELTS OR THE FAN. DO NOT WEAR LOOSE CLOTHING.

(1) Start the engine.

(2) Spray a small stream of water (Spray Bottle) at the suspected leak area.

(3) If engine RPM'S change, the area of the suspected leak has been found.

(4) Repair as required.

STANDARD PROCEDURE - INTAKE MANIFOLD VACUUM PORT REPAIR

The composite intake manifold vacuum ports can be repaired. Although, if the manifold plenum chamber is damaged or cracked, the manifold must be replaced.

To repair a broken or damaged vacuum nipple (port) on the composite intake manifold, perform the following procedure:

PARTS REQUIRED	TOOLS REQUIRED
Brass Nipple – 3/8″ O.D. x 1/4″ pipe thread (Speed Control Port)	Pipe Tap – 1/4″ - 18 NPT
Brass Nibble – 1/2″ O.D. x 1/4″ pipe thread (Brake Booster Port)	Drill Bit – 7/16″
	File/Sand Paper

NOTE: While performing this procedure, avoid getting the manifold material residue into the plenum chamber.

(1) File or sand the remaining port back until a flat surface is obtained (plane normal to nipple (port) axis).

(2) Drill out the nipple (port) base using a 7/16” drill bit (Fig. 104).

(3) Using a 1/4”–18 NPT pipe tap, cut internal threads (Fig. 104). Use caution to start tap in a axis same as original nipple.

(4) Apply Mopar® Thread Sealant to threads of repair nipple(s).

(5) Install repair nipple(s). Do not over torque repair nipple(s).

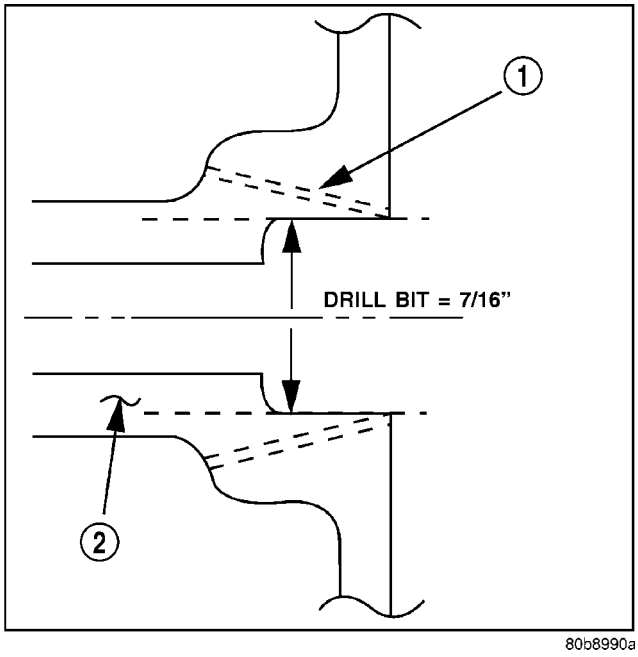

Fig. 104 MANIFOLD PORT (NIPPLE) REPAIR

1 - 1/4” — 18NPT PIPE TAP
2 - NIPPLE (PORT)

REMOVAL

REMOVAL - INTAKE MANIFOLD UPPER

(1) Disconnect negative battery cable.

(2) Remove throttle body air inlet hose and air cleaner housing assembly.

INTAKE MANIFOLD (Continued)

(3) Remove throttle cable shield. Remove throttle and speed control cables from throttle arm and bracket.

(4) Remove throttle cable bracket.

(5) Disconnect electrical connectors from the following components:

- Manifold Absolute Pressure (MAP) Sensor
- Throttle Position Sensor (TPS) Sensor
- Idle Air Control (IAC) Motor

(6) Disconnect Vapor Purge hose, Brake Booster hose, Speed Control Servo, Positive Crankcase Ventilation (PCV) hose.

(7) Loosen upper fastener at throttle body support bracket.

(8) Remove manifold attaching bolts (Fig. 106).

(9) Remove upper manifold (Fig. 105).

(10) Inspect manifold. (Refer to 9 - ENGINE/MANIFOLDS/INTAKE MANIFOLD - INSPECTION)

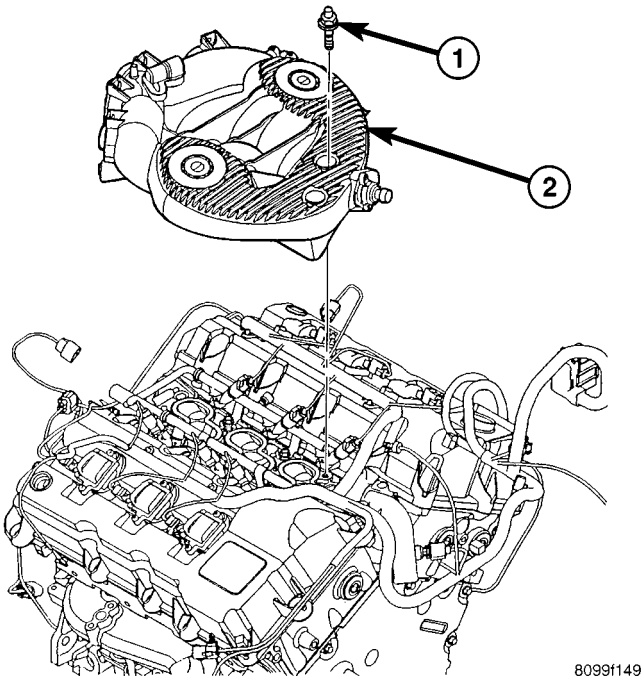

Fig. 105 INTAKE MANIFOLD - UPPER

1 - BOLT
2 - INTAKE MANIFOLD - UPPER

REMOVAL - INTAKE MANIFOLD LOWER

(1) Release fuel system pressure. (Refer to 14 - FUEL SYSTEM/FUEL DELIVERY - STANDARD PROCEDURE)

(2) Remove upper intake manifold. (Refer to 9 - ENGINE/MANIFOLDS/INTAKE MANIFOLD - REMOVAL)

(3) Disconnect electrical connectors from the fuel injectors.

(4) Remove fuel supply hose from fuel rail. (Refer to 14 - FUEL SYSTEM/FUEL DELIVERY/FUEL LINES - STANDARD PROCEDURE)

(5) Remove screw attaching fuel rail support bracket to the throttle body support bracket.

(6) Remove bolts attaching fuel rail.

(7) Remove fuel rail and injectors as an assembly.

(8) Remove manifold attaching bolts (Fig. 107).

(9) Remove lower manifold.

(10) Inspect manifold. (Refer to 9 - ENGINE/MANIFOLDS/INTAKE MANIFOLD - INSPECTION)

INSPECTION

INSPECTION - INTAKE MANIFOLD UPPER

Check manifold for:

- Damage and cracks
- Gasket surface damage or warpage
- Damaged or clogged EGR ports

If the manifold exihibits any damaged or warped conditions, replace the manifold. Clean EGR ports as neccessary.

If a vacuum port is damaged, a repair procedure can be performed (Refer to 9 - ENGINE/MANIFOLDS/INTAKE MANIFOLD - STANDARD PROCEDURE).

INSPECTION - INTAKE MANIFOLD LOWER

Check manifold for:

- Damage and cracks
- Gasket surface damage or warpage
- Damaged fuel injector ports

If the manifold exihibits any of these conditions, replace the manifold.

INSTALLATION

INSTALLATION - INTAKE MANIFOLD UPPER

(1) Clean and inspect sealing surfaces. Gaskets can be reused, if free of cuts or tears.

NOTE: Make sure fuel injectors and wiring harnesses are in correct position to not interfere with upper manifold installation.

(2) Position upper manifold onto lower manifold (Fig. 105).

(3) Install manifold attaching bolts and tighten in sequence shown in (Fig. 106) to 12 N·m (105 in. lbs.).

(4) Tighten upper fastener at throttle body support bracket.

(5) Connect speed control servo, PCV , brake booster, and vapor purge hoses.

(6) Connect electrical connectors to the following components:

- Manifold Absolute Pressure (MAP) Sensor
- Throttle Position Sensor (TPS) Sensor
- Idle Air Control (IAC) Motor

INTAKE MANIFOLD (Continued)

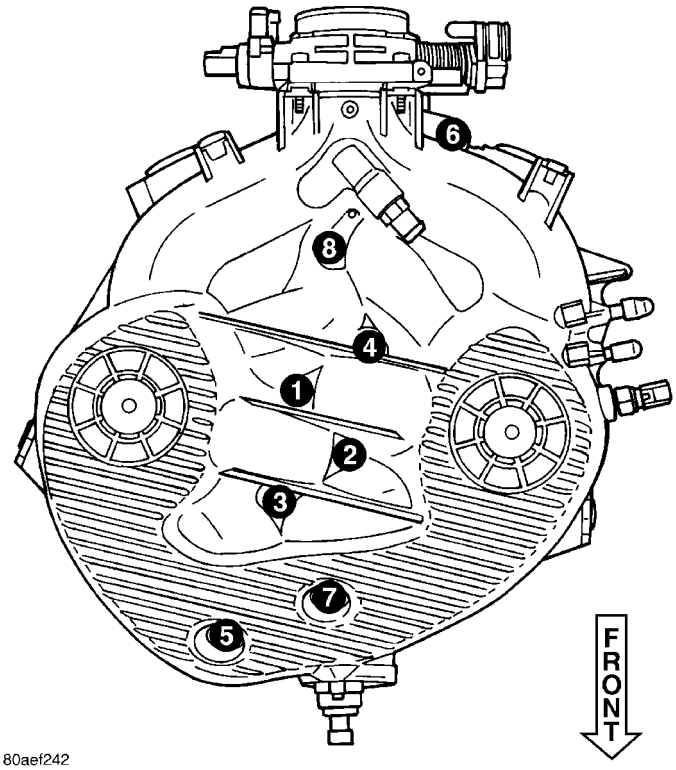

Fig. 106 Upper Intake Manifold Tightening Sequence

(7) Install throttle cable bracket.

(8) Connect throttle and speed control cables to bracket and throttle arm. Install throttle cable shield.

(9) Install throttle body air inlet hose and air cleaner housing assembly.

(10) Connect negative battery cable.

INSTALLATION - INTAKE MANIFOLD LOWER

(1) Clean and inspect sealing surfaces of cylinder head and manifold. Gaskets can be reused provided they are free of cuts or tears.

(2) Position manifold on cylinder head surfaces.

NOTE: For ease of installing upper intake manifold, install a bolt 2 – 3 turns to the rearmost attaching hole of intake. This will properly position lower manifold.

(3) Install fuel rail with injectors.

(4) Install manifold attaching bolts and tighten in sequence shown in (Fig. 107) to 12 N·m (105 in. lbs.). Remove bolt used for aligning manifold.

(5) Connect the fuel injector electrical connectors.

NOTE: Make sure fuel injectors are located in the correct location and position, as upper intake manifold interference could occur.

(6) Install screw attaching fuel rail support bracket to the throttle body support bracket.

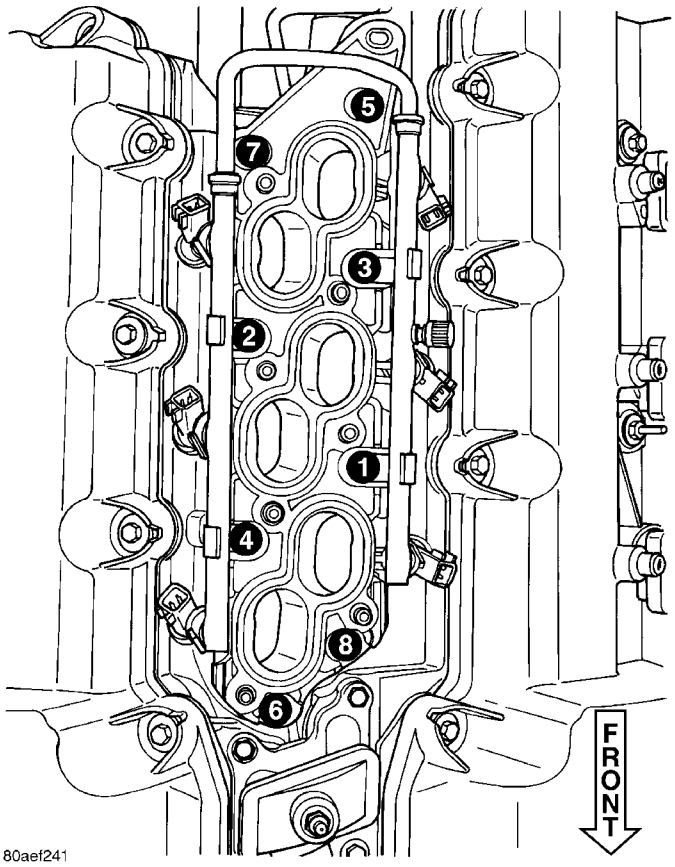

Fig. 107 Lower Intake Manifold Tightening Sequence

(7) Connect fuel supply hose to fuel rail. (Refer to 14 - FUEL SYSTEM/FUEL DELIVERY/FUEL LINES - STANDARD PROCEDURE)

(8) Install upper intake manifold. (Refer to 9 - ENGINE/MANIFOLDS/INTAKE MANIFOLD - INSTALLATION)

EXHAUST MANIFOLD

REMOVAL

FRONT EXHAUST MANIFOLD

(1) Disconnect negative battery cable.

(2) Disconnect and remove oxygen sensor.

(3) Raise vehicle on hoist.

(4) Remove exhaust cross-under pipe (Refer to 11 - EXHAUST SYSTEM/CROSS-OVER PIPE - REMOVAL).

(5) Remove front catalytic converter (Refer to 11 - EXHAUST SYSTEM/CATALYTIC CONVERTER - REMOVAL).

(6) Lower vehicle.

(7) Remove exhaust manifold attaching bolts and remove manifold.

EXHAUST MANIFOLD (Continued)

REAR EXHAUST MANIFOLD

(1) Disconnect negative battery cable.

(2) Remove throttle body air inlet hose and air cleaner housing assembly.

(3) Remove bolts attaching EGR tube from exhaust manifold and EGR valve. Discard gaskets.

(4) Raise vehicle on hoist.

(5) Remove exhaust system from vehicle (Refer to 11 - EXHAUST SYSTEM - REMOVAL).

(6) Remove exhaust cross-under pipe (Refer to 11 - EXHAUST SYSTEM/CROSS-OVER PIPE - REMOVAL).

(7) Remove rear catalytic converter (Refer to 11 - EXHAUST SYSTEM/CATALYTIC CONVERTER - REMOVAL).

(8) Disconnect and remove rear upstream oxygen sensor.

(9) Remove rear exhaust manifold heat shield.

(10) Remove exhaust manifold attaching bolts and remove manifold.

INSPECTION

(1) Inspect exhaust manifolds for damage or cracks.

(2) Check manifold flatness.

(3) Inspect the exhaust manifold gasket for obvious discoloration or distortion.

(4) Check distortion of the cylinder head mounting surface with a straightedge and thickness gauge.

INSTALLATION

FRONT EXHAUST MANIFOLD

(1) Install exhaust manifold and gasket. Tighten bolts starting at the center working outward to 23 N·m (200 in. lbs.).

(2) Raise vehicle on hoist.

(3) Install front catalytic converter and manifold heat shield. Tighten fasteners to 28 N·m (250 in. lbs.) (Refer to 11 - EXHAUST SYSTEM/CATALYTIC CONVERTER - INSTALLATION).

(4) Install exhaust cross-under pipe. Tighten fasteners to 28 N·m (250 in. lbs.) (Refer to 11 - EXHAUST SYSTEM/CROSS-OVER PIPE - INSTALLATION).

(5) Lower vehicle.

(6) Install oxygen sensor and connect electrical connector.

(7) Connect negative battery cable.

REAR EXHAUST MANIFOLD

(1) Install exhaust manifold and gasket. Tighten bolts working from center outwards to 23 N·m (200 in. lbs.).

(2) Install rear catalytic converter and manifold heat shield. Tighten fasteners to 28 N·m (250 in. lbs.) (Refer to 11 - EXHAUST SYSTEM/CATALYTIC CONVERTER - INSTALLATION).

(3) Install oxygen sensor and connect electrical connector.

(4) Install exhaust cross-under pipe. Tighten fasteners to 28 N·m (250 in. lbs.) (Refer to 11 - EXHAUST SYSTEM/CROSS-OVER PIPE - INSTALLATION).

(5) Install exhaust system. Tighten fasteners to 28 N·m (250 in. lbs.) (Refer to 11 - EXHAUST SYSTEM - INSTALLATION).

(6) Lower vehicle.

(7) Install EGR tube using new gaskets. Tighten screws to 11 N·m (95 in. lbs.).

(8) Install throttle body air inlet hose and air cleaner housing assembly.

(9) Connect negative battery cable.

VALVE TIMING

DESCRIPTION

The timing drive system has been designed to provide quiet performance and reliability to support a **NON** free-wheeling engine. The system consists of a primary and secondary chain drive.

The **primary** timing chain drive (Fig. 108) uses a single, double-flexure, inverted tooth type chain. The primary chain drives both of the intake camshafts directly from a sprocket mounted on the crankshaft. In addition, the water pump is driven by the “back side” of the primary chain, necessitating the double-flexure type chain.

The chain is controlled by three fixed chain guides and a pivoting tensioner arm (Fig. 108). These guides utilize low-friction and long wearing nylon plastic wear faces. To tension the primary chain, a fully automatic spring-loaded, engine oil-fed, hydraulic tensioner is used. The tensioner is mounted in the right cylinder head with the plunger contacting the pivoting tensioner arm. A mechanical ratchet mechanism inside the tensioner prevents excessive chain slack upon engine start-up as the chain wears. The tensioner is designed with an internal oil reservoir to assure noise-free performance, even during engine start-up before oil pressure reaches the tensioner.

For lubrication the primary chain utilizes oil leakage from the front of the oil pump. This oil spills on the crankshaft sprocket, which is then carried by the chain throughout the primary drive.

VALVE TIMING (Continued)

The **secondary** timing chain drive system uses two conventional roller-type chains, one at each cylinder bank (Fig. 25). The purpose of the secondary chain is to provide a mechanical driven connection between the intake and exhaust camshafts. The intake camshafts drive the exhaust camshafts. The sprockets for both intake and exhaust camshafts are a press-fit and are only serviced as an assembly with the camshafts.

To tension the secondary chain a spring-loaded, hydraulic tensioner is used at each bank and attaches to each cylinder head between the intake and exhaust camshafts (Fig. 25). The tensioner incorporates upper and lower chain guide faces. The lower guide face is attached directly to the tensioner's hydraulic plunger. Also, the tensioner uses an internal oil reservoir design to prevent engine start-up noise. The secondary chains are lubricated via an oil passage through the upper guide face on each tensioner.

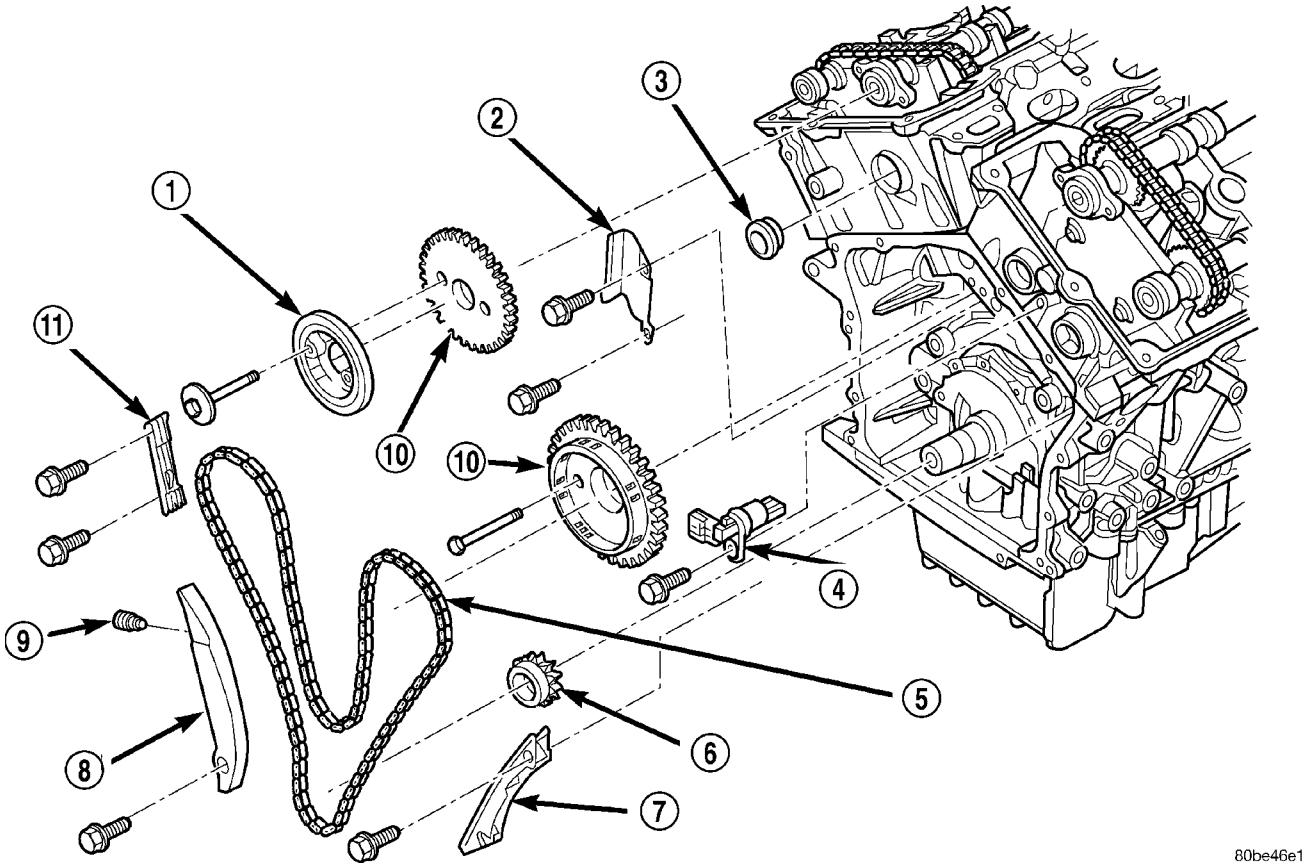

Fig. 108 TIMING DRIVE SYSTEM

1 – CAMSHAFT DAMPER (IF EQUIPPED)
2 – CHAIN GUIDE
3 – ACCESS PLUG
4 – CAMSHAFT POSITION SENSOR
5 – PRIMARY TIMING CHAIN
6 – CRANKSHAFT SPROCKET
7 – CHAIN GUIDE
8 – CHAIN TENSIONER ARM
9 – CHAIN TENSIONER
10 – CAMSHAFT SPROCKETS
11 – CHAIN GUIDE

VALVE TIMING (Continued)

STANDARD PROCEDURE

ENGINE TIMING - VERIFICATION

Correct timing is critical for the NON free-wheeling designed, 2.7L engine. Engine timing can be verified by using the following procedures:

(1) Remove cylinder head covers. (Refer to 9 - ENGINE/CYLINDER HEAD/CYLINDER HEAD COVER(S) - REMOVAL)

(2) Rotate engine until number one cylinder is at TDC on the EXHAUST stroke.

(3) View the intake camshaft sprocket timing mark. The mark should be 90° from the cylinder head cover sealing surface (Fig. 109)on both right and left cylinder banks.

(4) Count chain pins from the mark on the intake camshaft towards the exhaust camshaft. Engine is timed correctly when there are 12 chain pins between the timing marks on the intake camshaft and exhaust camshaft (Fig. 109).

(5) If marks are not correctly aligned, proceed to Timing Chain and Sprockets for service procedures. (Refer to 9 - ENGINE/VALVE TIMING/TIMING BELT/CHAIN AND SPROCKETS - REMOVAL)

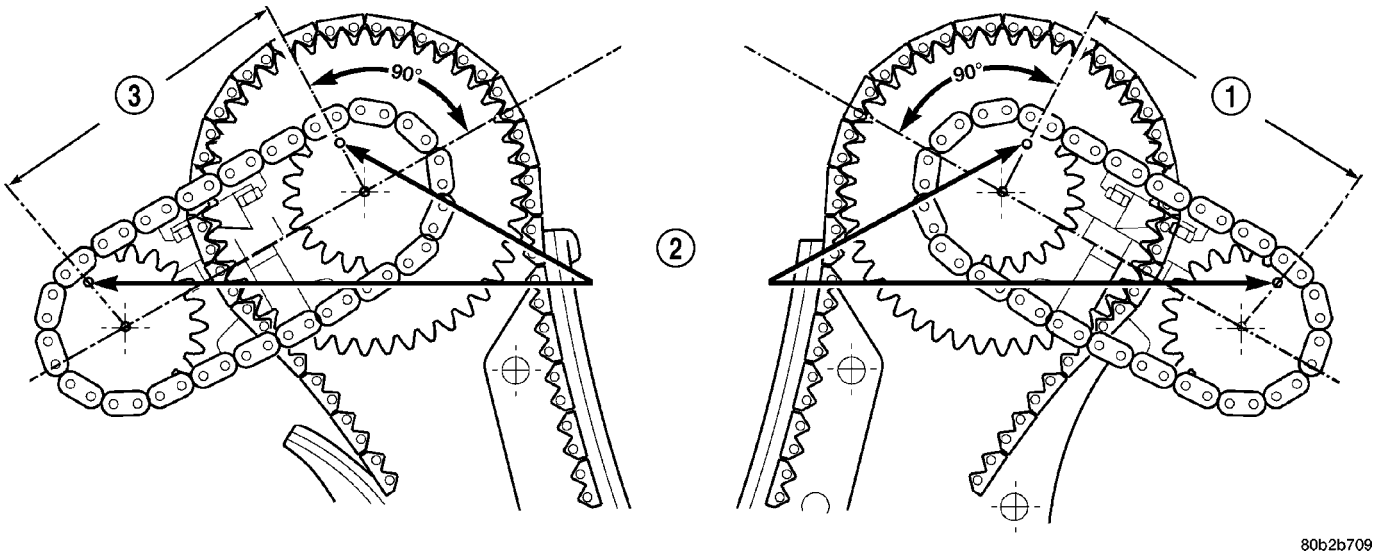

Fig. 109 ENGINE TIMING

1 - 12 PINS
2 - CAMSHAFT TIMING MARKS
3 - 12 PINS

TIMING CHAIN COVER

REMOVAL

(1) Disconnect negative battery cable.

(2) Drain cooling system (Refer to 7 - COOLING/ENGINE - STANDARD PROCEDURE).

(3) Remove coolant pressure container (Refer to 7 - COOLING/ENGINE/COOLANT RECOVERY PRESS CONTAINER - REMOVAL).

(4) Raise vehicle on hoist.

(5) Remove right front wheel and belt splash shield.

(6) Remove accessory drive belts (Refer to 7 - COOLING/ACCESSORY DRIVE/DRIVE BELTS - REMOVAL).

(7) Remove crankshaft vibration dampner (Refer to 9 - ENGINE/ENGINE BLOCK/VIBRATION DAMPER - REMOVAL).

(8) Remove AC/Generator belt tensioner/bracket assembly.

(9) Disconnect heater hose from tube at right front frame rail area.

(10) Lower vehicle.

(11) Remove screws securing heater supply tube to right frame rail. Reposition heater supply tube.

(12) Place a floor jack with wooden block under oil pan to support engine.

(13) Remove right engine mount (Refer to 9 - ENGINE/ENGINE MOUNTING/RIGHT MOUNT - REMOVAL).

(14) Remove upper timing chain cover bolts.

(15) Raise vehicle on hoist.

(16) Remove remaining bolts securing timing chain cover to engine (Fig. 110).

(17) Remove timing chain cover.

(18) Discard timing chain cover gasket. Remove front crankshaft oil seal from cover.

INSTALLATION

(1) Inspect and clean timing chain cover sealing surfaces.

(2) Before installing timing cover gasket apply a 1/8 inch bead of Mopar® Engine RTV GEN II to the parting lines between the oil pan and cylinder block (Fig. 111).

(3) Install timing cover and gasket. Tighten M10 cover bolts to 54 N·m (40 ft. lbs.) and M6 bolts to 12 N·m (105 in. lbs.) (Fig. 110).

(4) Install front crankshaft oil seal using Special Tool 6780-2 sleeve and 6780-1 installer.

(5) Lower vehicle.

(6) Install right engine mount (Refer to 9 - ENGINE/ENGINE MOUNTING/RIGHT MOUNT - INSTALLATION).

(7) Install screws attaching heater supply tube to right front frame rail area.

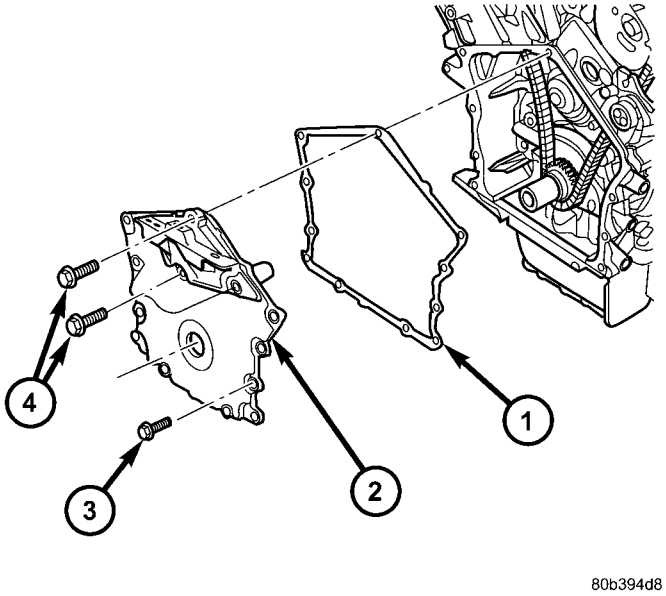

Fig. 110 TIMING CHAIN COVER

1 - GASKET
2 - TIMING CHAIN COVER
3 - BOLT - M6
4 - BOLT - M10

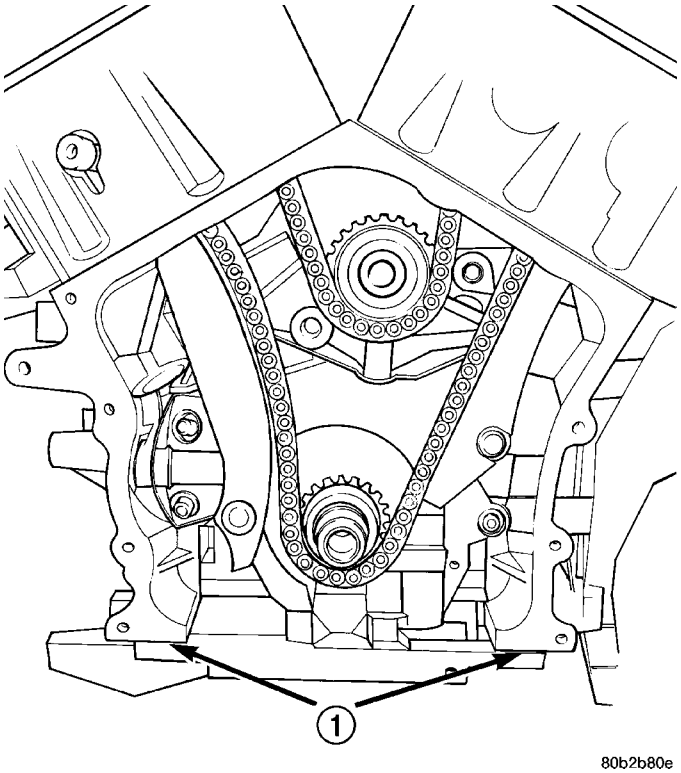

Fig. 111 TIMING CHAIN COVER SEALING

1 - PLACE A 1/8 INCH BEAD OF SEALER AT PARTING LINE

(8) Raise vehicle on hoist.

TIMING CHAIN COVER (Continued)

(9) Connect heater hose to supply tube at right front frame rail area.

(10) Install AC/Generator belt tensioner/bracket assembly.

(11) Install crankshaft vibration damper. (Refer to 9 - ENGINE/ENGINE BLOCK/VIBRATION DAMPER - INSTALLATION)

(12) Install accessory drive belts (Refer to 7 - COOLING/ACCESSORY DRIVE/DRIVE BELTS - INSTALLATION).

(13) Install belt splash shield and right front wheel.

(14) Lower vehicle.

(15) Install coolant pressure container (Refer to 7 - COOLING/ENGINE/COOLANT RECOVERY PRESS CONTAINER - INSTALLATION).

(16) Fill cooling system (Refer to 7 - COOLING/ ENGINE - STANDARD PROCEDURE).

(17) Connect negative battery cable.

TIMING CHAIN AND SPROCKETS

REMOVAL

REMOVAL - TIMING CHAIN

(1) Disconnect negative battery cable.

(2) Drain cooling system (Refer to 7 - COOLING/ ENGINE - STANDARD PROCEDURE).

(3) Remove upper intake manifold. (Refer to 9 - ENGINE/MANIFOLDS/INTAKE MANIFOLD - REMOVAL)

(4) Remove cylinder head covers, crankshaft vibration damper, and timing chain cover. (Refer to 9 - ENGINE/CYLINDER HEAD/CYLINDER HEAD COVER(S) - REMOVAL) (Refer to 9 - ENGINE/ENGINE BLOCK/VIBRATION DAMPER - REMOVAL) (Refer to 9 - ENGINE/VALVE TIMING/TIMING BELT / CHAIN COVER(S) - REMOVAL)

CAUTION: When aligning timing marks, always rotate engine by turning the crankshaft. Failure to do so will result in valve and/or piston damage.

(5) Align crankshaft sprocket timing mark to mark on oil pump housing (Fig. 112). The mark on oil pump housing is 60° ATDC of #1 cylinder.

CAUTION: When the timing chain is removed and the cylinder heads are still installed, DO NOT rotate the camshafts or crankshaft without first locating the proper crankshaft position. Failure to do so will result in valve and/or piston damage.

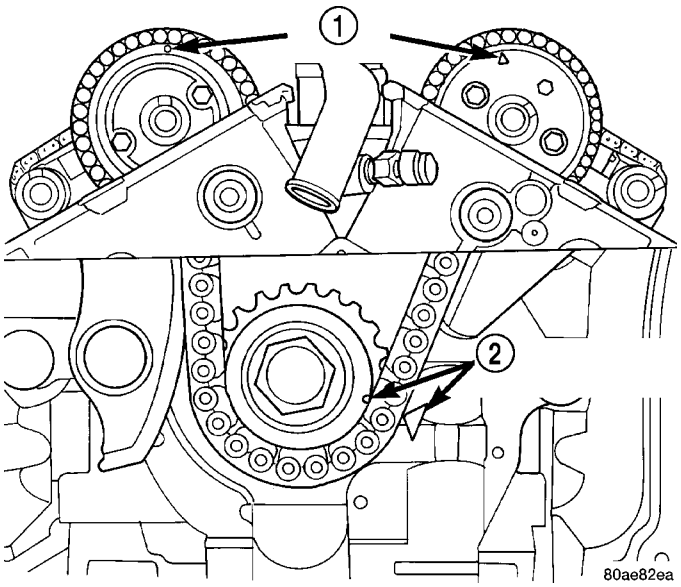

Fig. 112 TIMING MARK ALIGNMENT

1 - CAMSHAFT TIMING MARKS
2 - CRANKSHAFT TIMING MARKS

(6) Remove power steering pump and bracket as an assembly. **Do not** disconnect power steering lines from pump. Reposition pump and support with suitable retaining strap.

(7) Remove primary timing chain tensioner retainer cap and tensioner from right cylinder head (Fig. 113).

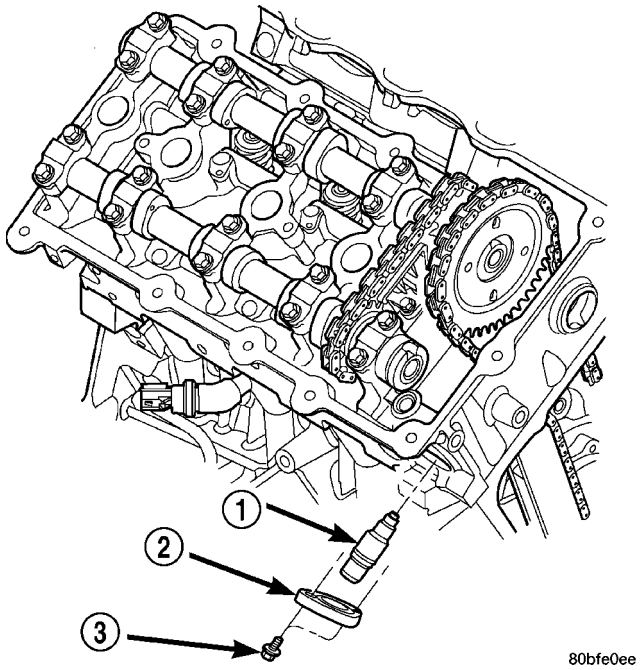

Fig. 113 PRIMARY TIMING CHAIN TENSIONER

1 - TENSIONER
2 - RETAINER CAP
3 - BOLT

TIMING CHAIN AND SPROCKETS (Continued)

(8) Disconnect and remove camshaft position sensor from left cylinder head (Fig. 114).

(9) Remove timing chain guide access plugs from cylinder heads (Fig. 114).

NOTE: When camshaft sprocket bolts are removed, the camshafts will rotate in a clockwise direction.

(10) Starting with the right camshaft sprocket, remove the sprocket attaching bolts. Remove camshaft damper (if equipped) and sprocket (Fig. 114).

(11) Remove left side camshaft sprocket attaching bolts and remove sprocket (Fig. 114).

(12) Remove lower chain guide and tensioner arm (Fig. 114).

(13) Remove the primary timing chain.

(14) For removal of crankshaft sprocket, (Refer to 9 - ENGINE/ENGINE BLOCK/CRANKSHAFT - REMOVAL).

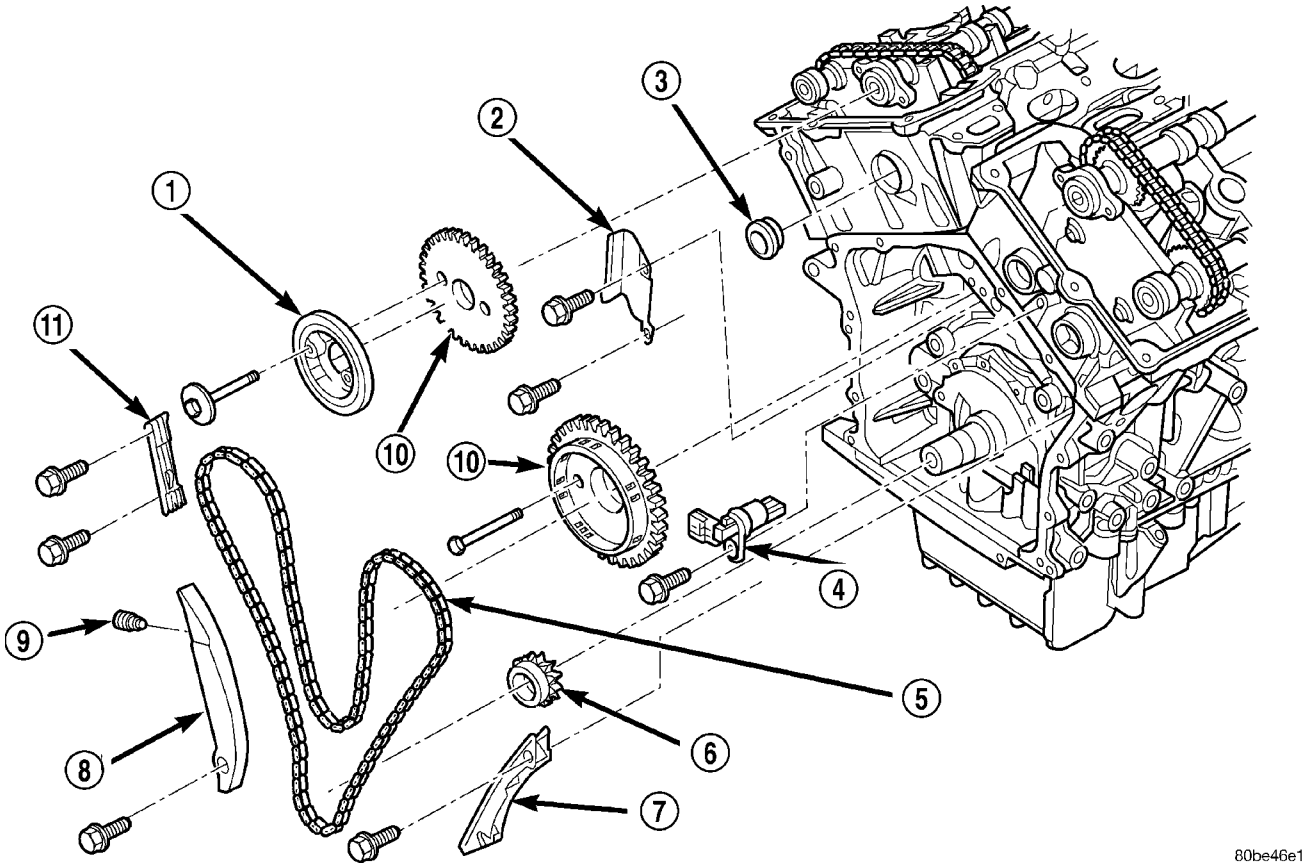

Fig. 114 TIMING DRIVE SYSTEM - PRIMARY

1 - CAMSHAFT DAMPER (IF EQUIPPED)
2 - CHAIN GUIDE
3 - ACCESS PLUG
4 - CAMSHAFT POSITION SENSOR
5 - PRIMARY TIMING CHAIN
6 - CRANKSHAFT SPROCKET
7 - CHAIN GUIDE
8 - CHAIN TENSIONER ARM
9 - CHAIN TENSIONER
10 - CAMSHAFT SPROCKETS
11 - CHAIN GUIDE

TIMING CHAIN AND SPROCKETS (Continued)

REMOVAL - CRANKSHAFT SPROCKET

(1) Remove primary timing chain. (Refer to 9 - ENGINE/VALVE TIMING/TIMING BELT/CHAIN AND SPROCKETS - REMOVAL)

CAUTION: Use care not to turn crankshaft while removing crankshaft sprocket, as damage to valves and or pistons could occur.

(2) Remove crankshaft sprocket by first installing the crankshaft damper bolt. Apply grease or equivalent to damper bolt head and position Special Tools 5048-1, 5048-6, and 8539 on sprocket and crankshaft nose (Fig. 115). Remove sprocket using care not to rotate the crankshaft.

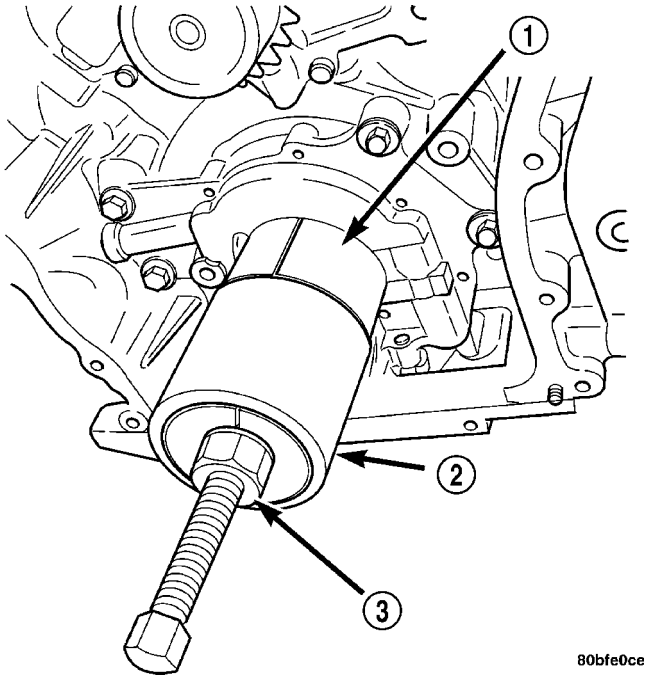

Fig. 115 Crankshaft Sprocket - Removal

1 - SPECIAL TOOL 8539
2 - SPECIAL TOOL 5048-6
3 - SPECIAL TOOL 5048-1

INSTALLATION

INSTALLATION - TIMING CHAIN

(1) Inspect all sprockets and chain guides. Replace if worn.

(2) For crankshaft sprocket installation procedures (Refer to 9 - ENGINE/ENGINE BLOCK/CRANKSHAFT - INSTALLATION).

(3) If removed, install right and left side short chain guides (Fig. 114). Tighten attaching bolts to 28 N·m (250 in. lbs.).

(4) Align crankshaft sprocket timing mark to the mark on oil pump housing (Fig. 116).

NOTE: Lubricate timing chain and guides with engine oil before installation.

(5) Place left side primary chain sprocket onto the chain so that the timing mark is located in-between the two (plated) timing links (Fig. 116).

(6) Lower the primary chain with left side sprocket through the left cylinder head opening.

NOTE: The camshaft sprockets can be allowed to float on the camshaft hub during installation.

(7) Loosely position left side camshaft sprocket over camshaft hub.

(8) Align timing (plated) link to the crankshaft sprocket timing mark (Fig. 116).

(9) Position primary chain onto water pump drive sprocket.

(10) Align right camshaft sprocket timing mark to the timing (plated) link on the timing chain (Fig. 116) and loosely position over camshaft hub.

(11) Verify that all chain timing (plated) links are properly aligned to the timing marks on all sprockets (Fig. 116).

(12) Install left side lower chain guide and tensioner arm (Fig. 114). Tighten attaching bolts to 28 N·m (250 in. lbs.).

TIMING CHAIN AND SPROCKETS (Continued)

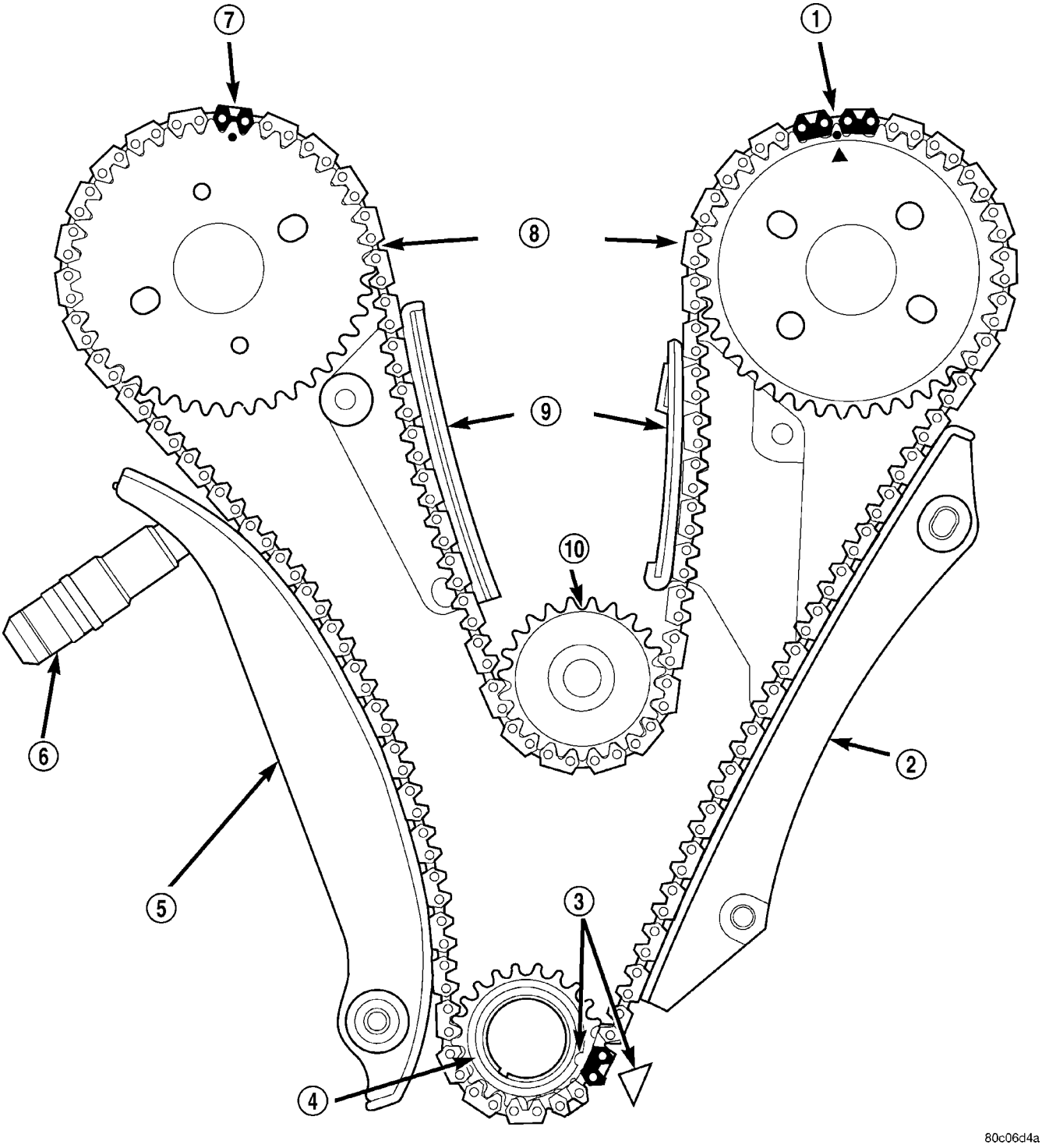

Fig. 116 TIMING CHAIN ALIGNMENT MARKS - PRIMARY

1 - CAMSHAFT TIMING MARKS
2 - CHAIN GUIDE
3 - CRANKSHAFT TIMING MARKS
4 - CRANKSHAFT SPROCKET
5 - CHAIN TENSIONER ARM
6 - CHAIN TENSIONER
7 - CAMSHAFT TIMING MARK
8 - INTAKE CAMSHAFT SPROCKETS
9 - CHAIN GUIDES
10 - WATER PUMP SPROCKET

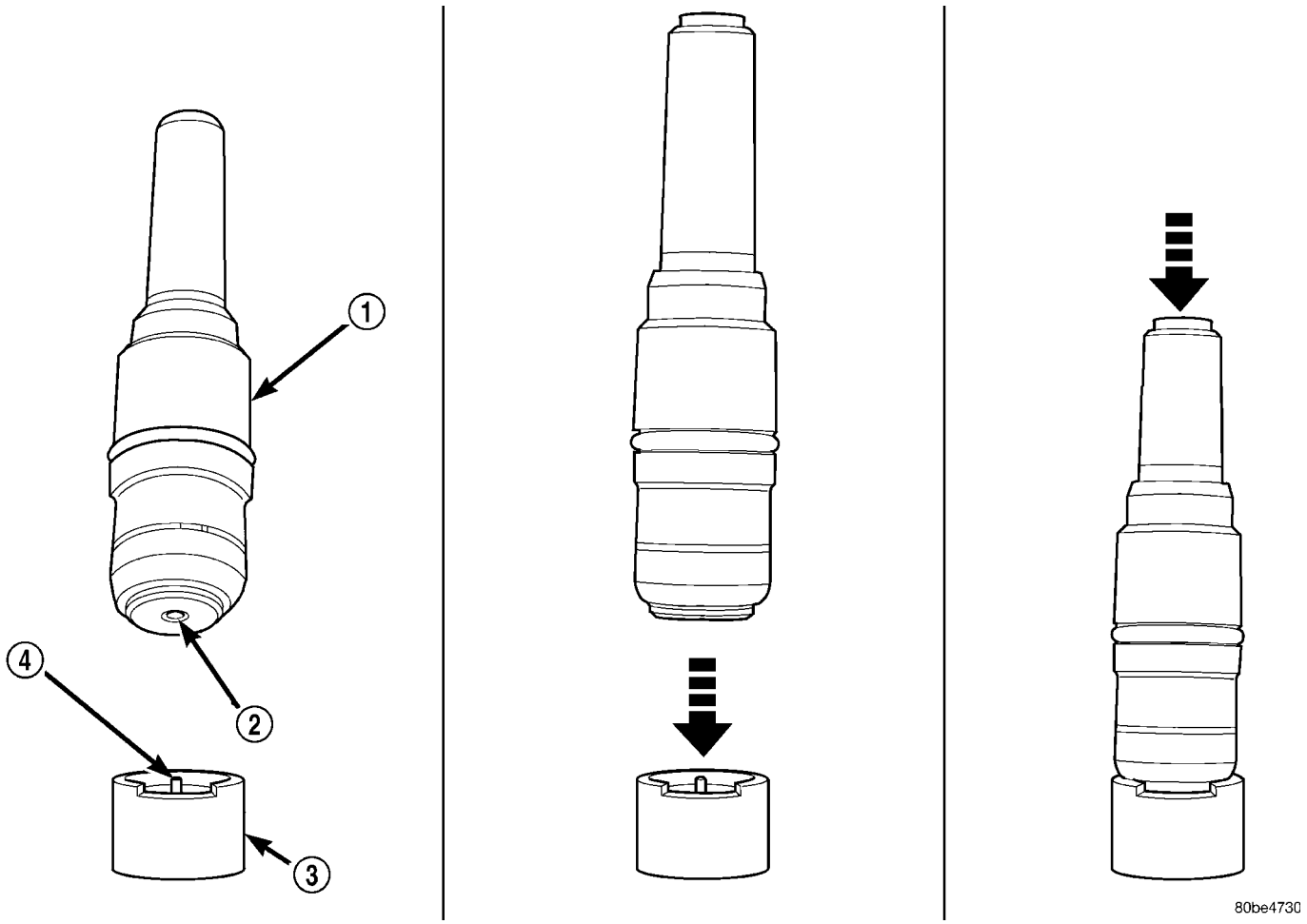

Fig. 117 TIMING CHAIN TENSIONER - OIL PURGING

1 - TENSIONER
2 - CHECK BALL
3 - SPECIAL TOOL 8186
4 - PIN

NOTE: Inspect O-ring on chain guide access plugs before installing. Replace O-ring as necessary.

(13) Install chain guide access plugs to cylinder heads (Fig. 114). Tighten plugs to 20 N·m (15 ft. lbs.).

NOTE: To reset the primary timing chain tensioner, engine oil will first need to be purged from the tensioner (Fig. 117).

(14) Purge oil from timing chain tensioner using the following procedure:

(a) Place the check ball end of tensioner into the shallow end of Special Tool 8186 (Fig. 117).

(b) Using hand pressure, slowly depress tensioner until oil is purged from tensioner (Fig. 117).

(15) Reset timing chain tensioner using the following procedure:

(a) Position cylinder plunger into the deeper end of Special Tool 8186 (Fig. 118).

(b) Apply a downward force until tensioner is reset (Fig. 118).

NOTE: If oil was not first purged from the tensioner, use slight finger pressure to assist the center arm pin of Special Tool 8186 to unseat the tensioner's check ball.

CAUTION: Ensure the tensioner is properly reset. The tensioner body must bottom against the top edge of Special Tool 8186. Failure to properly perform the resetting procedure may cause tensioner jamming.

TIMING CHAIN AND SPROCKETS (Continued)

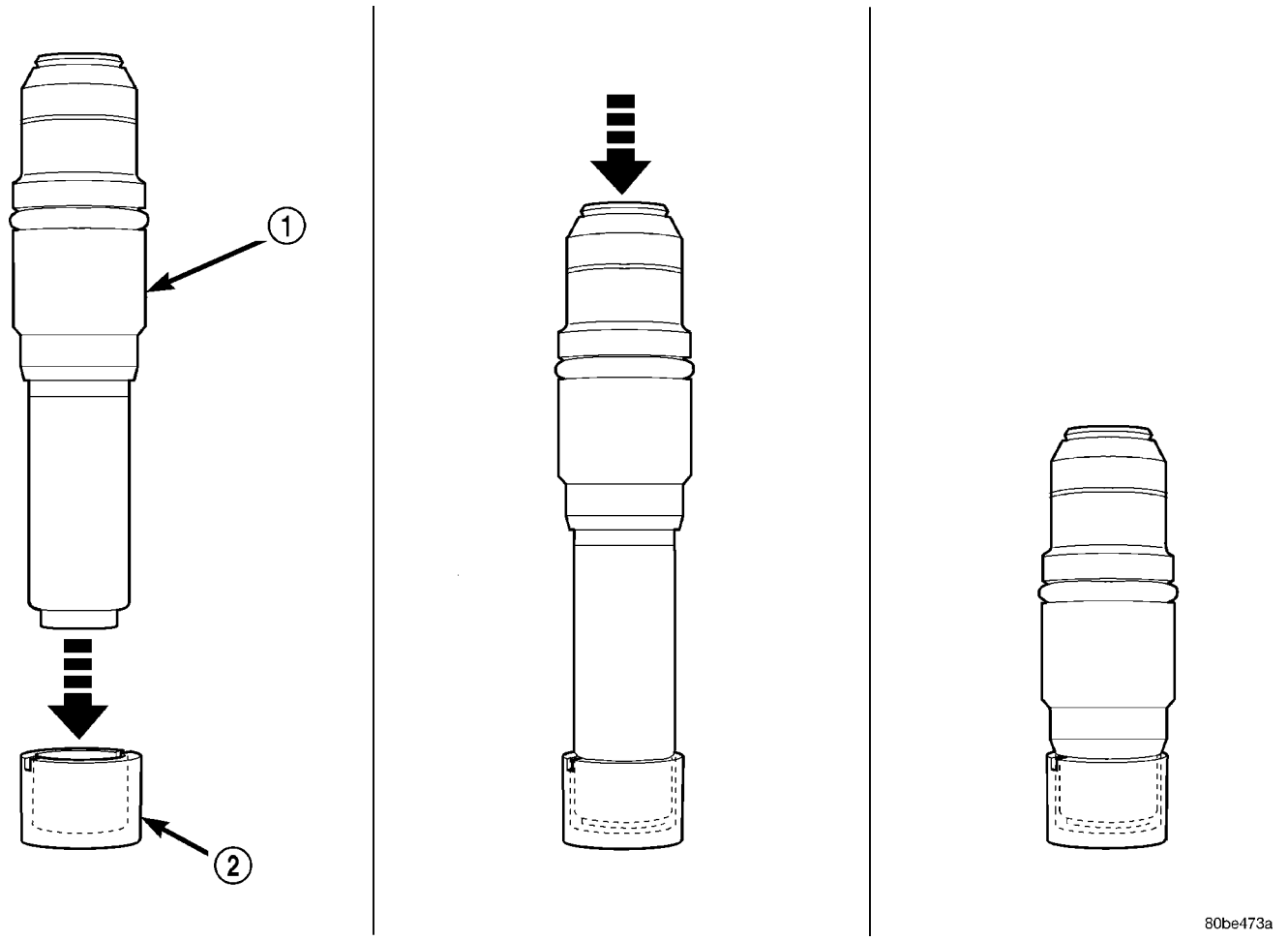

Fig. 118 TIMING CHAIN TENSIONER - RESETTING

1 - TENSIONER
2 - SPECIAL TOOL 8186

(16) Install the reset chain tensioner into the right cylinder head (Fig. 113).

(17) Position tensioner retaining plate and tighten bolts to 12 N·m (105 in. lbs.) (Fig. 113).

(18) Starting at the right cylinder bank, first position the camshaft damper (if equipped) on camshaft hub, then insert a 3/8” square drive extension with a breaker bar into intake camshaft drive hub. Rotate camshaft until the camshaft hub aligns to the camshaft sprocket and damper attaching holes. Install the sprocket attaching bolts and tighten to 28 N·m (250 in. lbs.) (Fig. 114).

(19) Turn the left side camshaft by inserting a 3/8” square drive extension with a breaker bar into intake camshaft drive hub and rotate camshaft until the sprocket attaching bolts can be installed. Tighten sprocket bolts to 28 N·m (250 in. lbs.) (Fig. 114).

(20) Rotate engine slightly clockwise to remove timing chain slack, if necessary.

TIMING CHAIN AND SPROCKETS (Continued)

(21) Activate the timing chain tensioner by using a flat bladed pry tool to gently pry tensioner arm towards the tensioner slightly (Fig. 119). Then release the tensioner arm. Verify the tensioner is activated (extends).

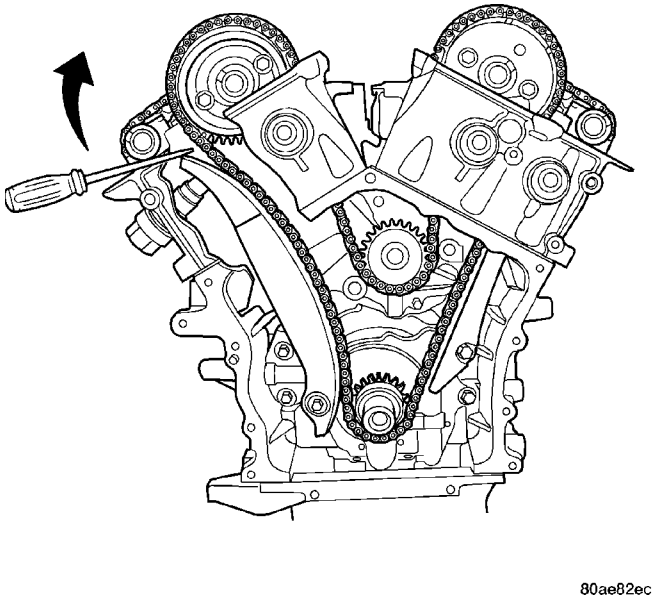

Fig. 119 TIMING CHAIN TENSIONER ACTIVATING

(22) Install power steering pump and bracket assembly.

(23) Install camshaft position sensor and connect electrical connector.

(24) Install the timing chain cover, crankshaft vibration damper, and cylinder head covers. (Refer to 9 - ENGINE/VALVE TIMING/TIMING BELT / CHAIN COVER(S) - INSTALLATION) (Refer to 9 - ENGINE/ENGINE BLOCK/VIBRATION DAMPER - INSTALLATION) (Refer to 9 - ENGINE/CYLINDER HEAD/CYLINDER HEAD COVER(S) - INSTALLATION)

(25) Install upper intake manifold. (Refer to 9 - ENGINE/MANIFOLDS/INTAKE MANIFOLD - INSTALLATION)

NOTE: After installation of a reset tensioner, engine noise will occur after initial start-up. This noise will normally disappear within 5–10 seconds.

(26) Fill cooling system (Refer to 7 - COOLING/ ENGINE - STANDARD PROCEDURE).

(27) Connect negative battery cable.

INSTALLATION - CRANKSHAFT SPROCKET

(1) Install crankshaft sprocket using Special Tools 6780-1 and 8179 (Fig. 120) until sprocket bottoms against crankshaft step flange. Use care not to rotate crankshaft.

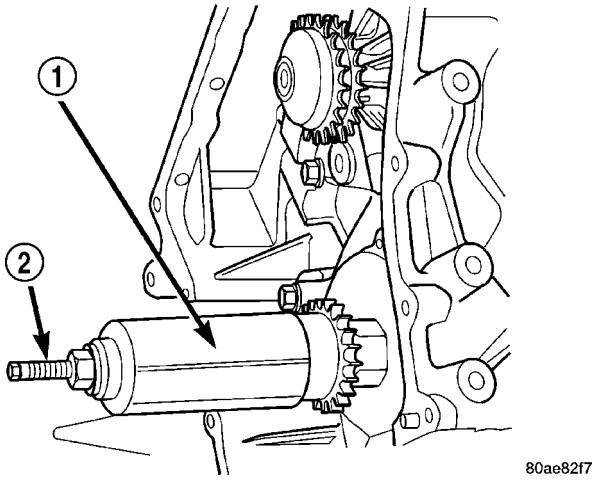

Fig. 120 Crankshaft Sprocket - Installation

1 - SPECIAL TOOL 6780–1
2 - SPECIAL TOOL 8179

(2) Verify that crankshaft sprocket is installed to proper depth by measuring from sprocket outer face to end of crankshaft (Fig. 121). Measurement should read: 39.05 ±0.50 mm (1.5374 ±0.020 in.).

(3) Install primary timing chain. (Refer to 9 - ENGINE/VALVE TIMING/TIMING BELT/CHAIN AND SPROCKETS - INSTALLATION)

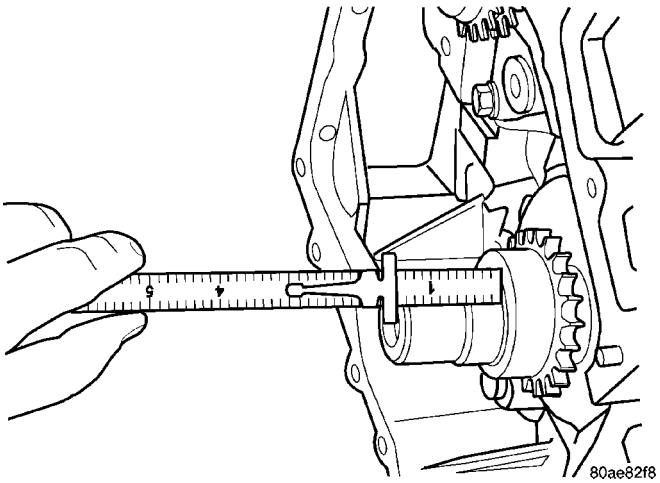

Fig. 121 Crankshaft Sprocket Depth Measurement

EXHAUST SYSTEM

TABLE OF CONTENTS

page

EXHAUST SYSTEM
DESCRIPTION 1
DIAGNOSIS AND TESTING
DIAGNOSIS AND TESTING - EXCESSIVE EXHAUST SYSTEM NOISE 3
DIAGNOSIS AND TESTING - EXHAUST SYSTEM RESTRICTION CHECK 4
REMOVAL - EXHAUST SYSTEM 4
INSPECTION 5
INSTALLATION - EXHAUST SYSTEM 5
ADJUSTMENTS 5
SPECIFICATIONS
TORQUE 5
SPECIAL TOOLS
EXHAUST SYSTEM 5
CATALYTIC CONVERTER - 2.0L/2.4L
DESCRIPTION 6
OPERATION 6
REMOVAL 6
INSPECTION 7
INSTALLATION 7
CATALYTIC CONVERTER - FRONT - 2.7L
REMOVAL 8
INSPECTION 8
INSTALLATION 9
CATALYTIC CONVERTER - REAR - 2.7L
REMOVAL 9
INSPECTION 9
INSTALLATION 10
CROSS-UNDER PIPE - 2.7L
REMOVAL 11
INSTALLATION 11
EXHAUST PIPE - CROSS-UNDER PIPE TO RESONATOR PIPE - 2.7L
REMOVAL 12
INSTALLATION 12
MUFFLER/PIPE ASSEMBLY
REMOVAL 12
INSTALLATION 13
RESONATOR/PIPE ASSEMBLY
REMOVAL 13
INSTALLATION 13
HEAT SHIELDS
DESCRIPTION 14
OPERATION 14

EXHAUST SYSTEM

DESCRIPTION

The exhaust system on the 2.0L/2.4L engine models consists of a front mounted catalytic converter, resonator/pipe assembly, muffler/pipe assembly, band clamps, and support isolators. The upstream oxygen sensor is located in the exhaust manifold. The downstream oxygen sensor is located in the catalytic converter.

The exhaust system on the 2.7L engine model consists of front and rear bank catalytic converters, cross-under pipe, connector pipe, resonator/pipe assembly, muffler/pipe assembly, band clamps, and support isolators. The upstream oxygen sensors are located in the front and rear exhaust manifolds. The downstream oxygen sensors are located in the cross-under pipe.

Resonators, mufflers, and exhaust pipes are tuned to each powertrain combination. (Fig. 1), (Fig. 2), and (Fig. 3).

EXHAUST SYSTEM (Continued)

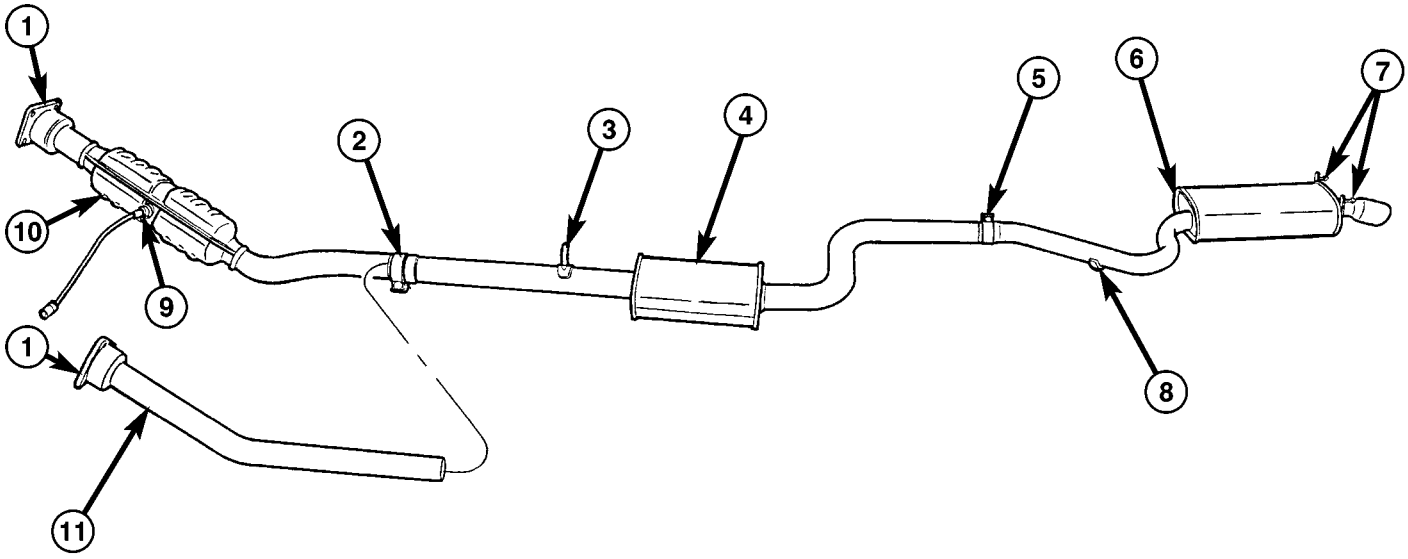

80b16b4a

Fig. 1 EXHAUST SYSTEM

1 - FLEX JOINT
2 - BAND CLAMP
3 - RESONATOR ALIGNMENT PIN
4 - RESONATOR/PIPE ASSEMBLY
5 - BAND CLAMP
6 - MUFFLER/PIPE ASSEMBLY
7 - REAR MUFFLER SUPPORTS
8 - MIDPIPE SUPPORT
9 - OXYGEN SENSOR
10 - CATALYTIC CONVERTOR (2.0L/2.4L)
11 - CONNECTOR PIPE (2.7L)

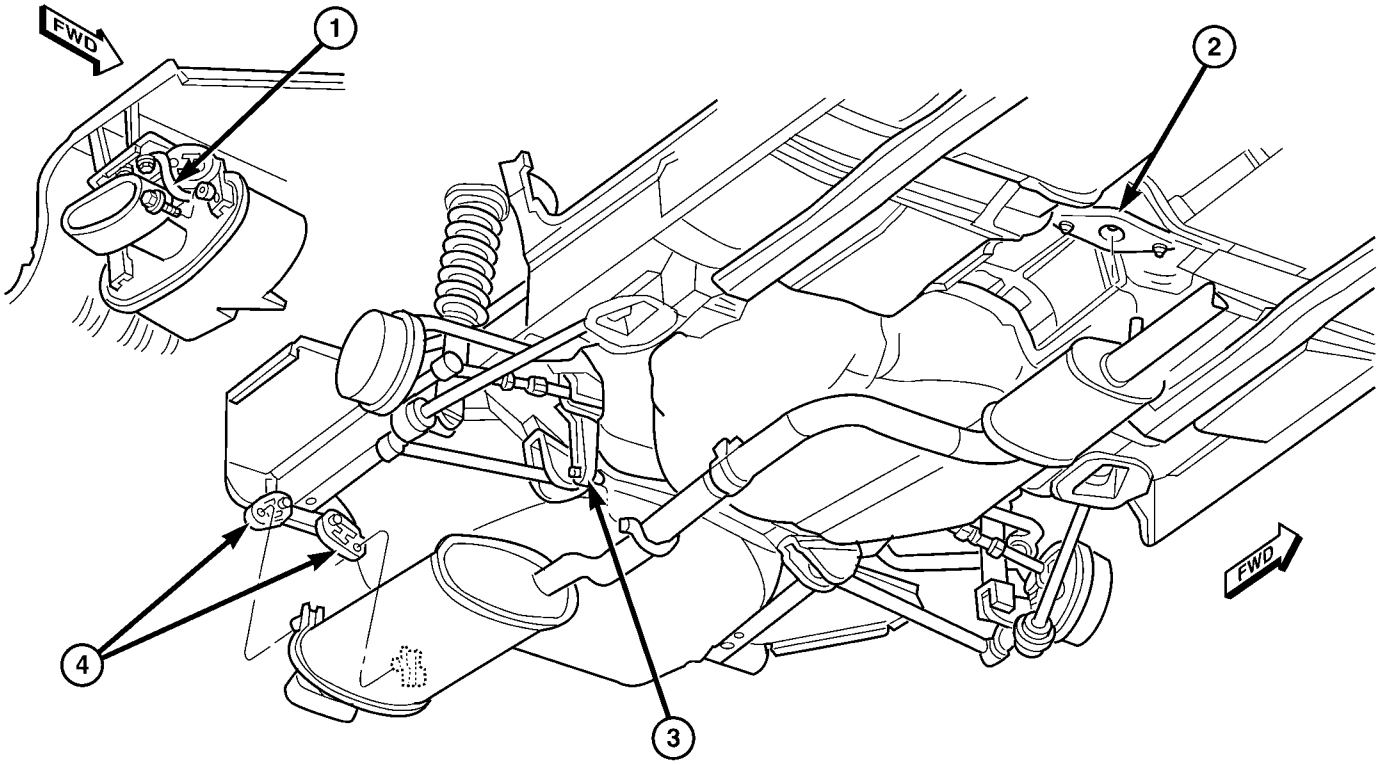

80b16fbb

Fig. 2 EXHAUST SYSTEM SUPPORTS

1 - GROUND STRAP
2 - RESONATOR GUIDANCE BRACKET
3 - MUFFLER/FRONT PIPE SUPPORT ISOLATOR
4 - REAR MUFFLER SUPPORT ISOLATORS

EXHAUST SYSTEM (Continued)

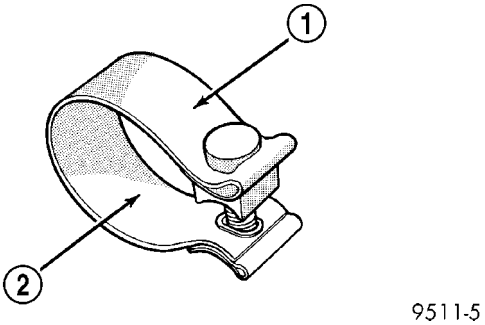

Fig. 3 Band Clamp

1 - CLAMP SIZE
2 - TORQUE SPECIFICATION

DIAGNOSIS AND TESTING

DIAGNOSIS AND TESTING - EXCESSIVE EXHAUST SYSTEM NOISE

CONDITION	POSSIBLE CAUSES	CORRECTION
EXCESSIVE EXHAUST NOISE (UNDER HOOD)	1. Exhaust manifold cracked or broken.	1. Replace manifold.
	2. Manifold to cylinder head leak.	2. Tighten manifold and/or replace gasket.
	3. EGR Valve to manifold gasket leakage.	3. Tighten fasteners or replace gasket.
	4. EGR Valve to EGR tube gasket leakage.	4. Tighten fasteners or replace gasket.
	5. EGR tube to manifold tube leakage.	5. Tighten tube nut.
	6. Exhaust flex-joint to manifold leak.	6. Tighten joint fasteners and/or replace gasket.
	7. Exhaust flex-joint.	7. Replace catalytic converter assembly.
	8. Pipe and shell noise from front exhaust pipe.	8. Characteristic of single wall pipe.
EXCESSIVE EXHAUST NOISE	1. Leak at exhaust pipe joints.	1. Tighten clamps at leaking joints.
	2. Burned or rusted out muffler assembly or exhaust pipe.	2. Replace muffler resonator tailpipe assembly or exhaust pipe with catalytic converter assembly.
	3. Burned or rusted out resonator.	3. Replace muffler resonator tailpipe assembly.
	4. Restriction in exhaust system.	4. Perform Exhaust System Restriction Check. Replace component as necessary.
	5. Converter material in muffler.	5. Replace muffler and converter assemblies. Check fuel injection and ignition systems for proper operation.

EXHAUST SYSTEM (Continued)

DIAGNOSIS AND TESTING - EXHAUST SYSTEM RESTRICTION CHECK

Exhaust system restriction can be checked by measuring back pressure using the DRB III® and PEP module pressure tester.

WARNING: THE NORMAL OPERATING TEMPERATURE OF THE EXHAUST SYSTEM IS VERY HIGH. THEREFORE, NEVER WORK AROUND OR ATTEMPT TO SERVICE ANY PART OF THE EXHAUST SYSTEM UNTIL IT IS COOLED. SPECIAL CARE SHOULD BE TAKEN WHEN WORKING NEAR THE CATALYTIC CONVERTER. THE TEMPERATURE OF THE CONVERTER RISES TO A HIGH LEVEL AFTER A SHORT PERIOD OF ENGINE OPERATION TIME.

(1) Disconnect and remove the upstream (before catalytic converter) oxygen sensor. (Refer to 14 - FUEL SYSTEM/FUEL INJECTION/O2 SENSOR - REMOVAL)

(2) Install the Exhaust Back Pressure Fitting Adaptor CH8519.

(3) Connect the Low Pressure Sensor (15 psi) CH7063 to the back pressure fitting.

(4) Following the PEP module instruction manual, connect all required cables to the DRB III® and PEP module. Select the available menu options on the DRBIII® display screen for using the digital pressure gauge function.

(5) Apply the park brake and start the engine.

(6) With transmission in Park or Neutral, raise engine speed to 2000 RPM. Monitor the pressure readings on the DRBIII®. Back pressure should not exceed specified limit. Refer to specification in table below EXHAUST BACK PRESSURE LIMITS.

NOTE: For applications with dual catalytic converters, repeat test on opposite converter using the previous steps.

(7) If pressure exceeds maximum limits, inspect exhaust system for restricted component. For further catalytic converter inspection procedures, (Refer to 11 - EXHAUST SYSTEM/CATALYTIC CONVERTER - INSPECTION). Replace component(s) as necessary.

EXHAUST BACK PRESSURE LIMITS

Exhaust Back Pressure Limit (Max)	
Vehicle in Park/Neutral (no load) @2000 RPM	3.45 Kpa (0.5 psi)

REMOVAL - EXHAUST SYSTEM

NOTE: Some service procedures require the removal of the entire exhaust system in order to gain better access to certain components for removal and installation. The following procedure explains how to remove the entire exhaust system. Refer to specific procedures if replacing individual exhaust components.

WARNING: THE NORMAL OPERATING TEMPERATURE OF THE EXHAUST SYSTEM IS VERY HIGH. THEREFORE, NEVER WORK AROUND OR ATTEMPT TO SERVICE ANY PART OF THE EXHAUST SYSTEM UNTIL IT IS COOLED. SPECIAL CARE SHOULD BE TAKEN WHEN WORKING NEAR THE CATALYTIC CONVERTER. THE TEMPERATURE OF THE CONVERTER RISES TO A HIGH LEVEL AFTER A SHORT PERIOD OF ENGINE OPERATION TIME.

(1) Raise vehicle on hoist and apply penetrating oil to fasteners that connect the exhaust system to the exhaust manifold (2.0L/2.4L)/cross-under pipe (2.7L).

(2) Remove ground strap from muffler.

(3) Vehicles equipped with 2.0L/2.4L engines, disconnect downstream oxygen sensor connector.

(4) Remove fasteners that attach exhaust system to exhaust manifold (2.0L/2.4L)/cross-under pipe (2.7L).

CAUTION: Do not use any tools to remove the rubber isolators—remove by hand only. Soapy water or silicone-based lubricant spray may be used to assist removal/installation of isolators. DO NOT use a petroleum-based lubricant on the isolators, as damage to the rubber material can occur.

(5) Remove support isolators from muffler supports (Fig. 2).

(6) Remove exhaust system from vehicle.

NOTE: Band clamps are spot welded to exhaust system. If a band clamp must be replaced, the spot weld must be ground off the exhaust pipe.

NOTE: When replacement is required on any component of the exhaust system, it is most important that original equipment parts (or their equivalent) be used for the following reasons:

- To insure proper alignment with other parts in the system.
- Provide acceptable exhaust noise levels and does not change exhaust system back pressure that could affect emissions and performance.

EXHAUST SYSTEM (Continued)

INSPECTION

Inspect the exhaust pipes, catalytic converters, muffler, and resonators for cracked joints, broken welds and corrosion damage that would result in a leaking exhaust system. Inspect the clamps, support brackets, and insulators for cracks and corrosion damage.

NOTE: Slip joint band clamps are spot welded to exhaust system. If a band clamp must be replaced, the spot weld must be ground off.

INSTALLATION - EXHAUST SYSTEM

NOTE: Always work from the front to rear of exhaust system when aligning and tightening exhaust system components.

(1) Loosely install fasteners that attach exhaust system to exhaust manifold (2.0L/2.4L)/cross-under pipe (2.7L).
(2) Install support isolators to muffler supports.
(3) Align exhaust system to maintain position and proper clearance with underbody parts. All support isolators should have equal load on them. Tighten fasteners that attach exhaust system to exhaust manifold (2.0L/2.4L)/cross-under pipe (2.7L) to 28 N·m (250 in. lbs.).
(4) Vehicles equipped with 2.0L/2.4L engines, reconnect the downstream oxygen sensor connector.
(5) Connect ground strap to muffler.
(6) Lower vehicle.
(7) Start the engine and inspect for exhaust leaks. Repair exhaust leaks as necessary.
(8) Check the exhaust system for contact with the body panels. Make the necessary ajustments, if needed.

ADJUSTMENTS

A misaligned exhaust system is usually indicated by a vibration, rattling noise, or binding of exhaust system components. These noises are sometimes hard to distinguish from other chassis noises. Inspect exhaust system for broken or loose clamps, heat shields, isolators, and brackets. Replace or tighten as necessary. It is important that exhaust system clearances and alignment be maintained.

Perform the following procedures to align the exhaust system:
(1) Loosen clamps and support brackets.
(2) Align the exhaust system starting at the front, working rearward.
(3) Tighten all clamps and brackets once alignment and clearances are achieved.

SPECIFICATIONS

TORQUE

DESCRIPTION	N·m	Ft. Lbs.	In. Lbs.
Band Clamps—Fastener	54	40	—
Body Heat Shield—Fasteners	5	—	40
Catalytic Converter to Exhaust Manifold Flange—Fasteners	28	—	250
Cross-Under Pipe —Fasteners (2.7L)	28	—	250

SPECIAL TOOLS

EXHAUST SYSTEM

DRB III & PEP Module - OT-CH6010A

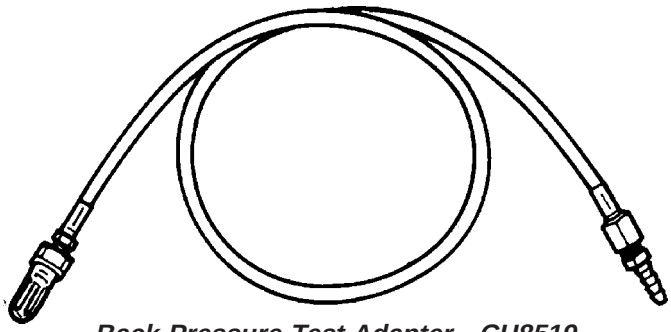

Back Pressure Test Adapter - CH8519

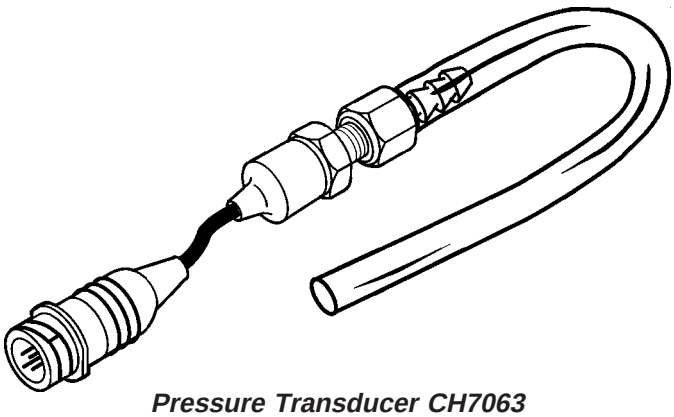

Pressure Transducer CH7063

CATALYTIC CONVERTER - 2.0L/2.4L

DESCRIPTION

The under-floor, three-way catalytic converter inlet is connected to the exhaust manifold by use of a flex joint and gasket. The outlet connects to the exhaust system.

CAUTION: When servicing, care must be exercised not to dent or bend the bellows or bellows cover of the flex-joint. Should this occur, the flex-joint will eventually fail and require the catalytic converter be replaced.

An exhaust flex-joint coupling (Fig. 4) is used to secure the catalytic converter to the engine manifold.

The exhaust flex-joint is welded to the catalytic converter.

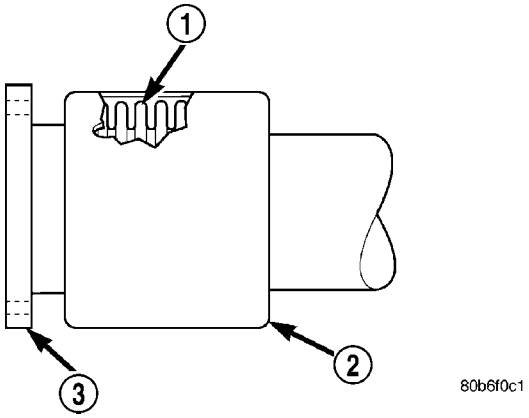

Fig. 4 FLEX-JOINT COUPLING - TYPICAL

1 - BELLOWS
2 - COVER
3 - FLANGE

OPERATION

The three-way catalytic converter simultaneously converts three exhaust emissions into harmless gases. Specifically, HC and CO emissions are converted into water (H2O) and carbon dioxide (CO2). Oxides of Nitrogen (NOx) are converted into elemental Nitrogen (N) and water. The three-way catalyst is most efficient in converting HC, CO and NOx at the stoichiometric air fuel ratio of 14.7:1.

The oxygen content in a catalyst is important for efficient conversion of exhaust gases. When a high oxygen content (lean) air/fuel ratio is present for an extended period, oxygen content in a catalyst can reach a maximum. When a rich air/fuel ratio is present for an extended period, the oxygen content in the catalyst can become totally depleted. When this occurs, the catalyst fails to convert the gases. This is known as catalyst ″punch through.″

Catalyst operation is dependent on its ability to store and release the oxygen needed to complete the emissions-reducing chemical reactions. As a catalyst deteriorates, its ability to store oxygen is reduced. Since the catalyst's ability to store oxygen is somewhat related to proper operation, oxygen storage can be used as an indicator of catalyst performance. Refer to the appropriate Diagnostic Information for diagnosis of a catalyst related Diagnostic Trouble Code (DTC).

The combustion reaction caused by the catalyst releases additional heat in the exhaust system, causing temperature increases in the area of the reactor under severe operating conditions. Such conditions can exist when the engine misfires or otherwise does not operate at peak efficiency. **Do not** remove spark plug wires from plugs or by any other means short out cylinders, if exhaust system is equipped with a catalytic converter. Failure of the catalytic converter can occur due to temperature increases caused by unburned fuel passing through the converter. This deterioration of the catalyst core can result in excessively high emission levels, noise complaints, and exhaust restrictions.

Unleaded gasoline must be used to avoid ruining the catalyst core. Do not allow engine to operate above 1200 RPM in neutral for extended periods over 5 minutes. This condition may result in excessive exhaust system/floor pan temperatures because of no air movement under the vehicle.

The flex joint allows flexing as the engine moves, preventing breakage that could occur from the back-and-forth motion of a transverse mounted engine.

CAUTION: Due to exterior physical similarities of some catalytic converters with pipe assemblies, extreme care should be taken with replacement parts. There are internal converter differences required in some parts of the country (particularly vehicles built for States with strict emission requirements) and between model years.

REMOVAL

NOTE: In the following procedure it is not necessary to separate the muffler/pipe assembly from the resonator/pipe assembly. They can both be removed as an assembly.

CATALYTIC CONVERTER - 2.0L/2.4L (Continued)

WARNING: THE NORMAL OPERATING TEMPERATURE OF THE EXHAUST SYSTEM IS VERY HIGH. THEREFORE, NEVER WORK AROUND OR ATTEMPT TO SERVICE ANY PART OF THE EXHAUST SYSTEM UNTIL IT IS COOLED. SPECIAL CARE SHOULD BE TAKEN WHEN WORKING NEAR THE CATALYTIC CONVERTER. THE TEMPERATURE OF THE CONVERTER RISES TO A HIGH LEVEL AFTER A SHORT PERIOD OF ENGINE OPERATION TIME.

(1) Raise vehicle on hoist and apply penetrating oil to resonator/pipe assembly band clamp, and the fasteners that connect the catalytic converter to the exhaust manifold.
(2) Remove ground strap from muffler.
(3) Loosen band clamp for resonator/pipe assembly.

CAUTION: Do not use any tools to remove the rubber isolators–remove by hand only. Soapy water or silicone–based lubricant spray may be used to assist removal/installation of isolators. DO NOT use a petroleum–based lubricant on the isolators, as damage to the rubber material can occur.

(4) Remove support isolators from muffler supports.
(5) Remove resonator/pipe and muffler/pipe as an assembly.
(6) Disconnect downstream oxygen sensor connector.
(7) Remove fasteners that attach catalytic converter to the exhaust manifold. Remove catalytic converter from vehicle.
(8) Remove and discard gasket.

INSPECTION

WARNING: THE NORMAL OPERATING TEMPERATURE OF THE EXHAUST SYSTEM IS VERY HIGH. THEREFORE, NEVER ATTEMPT TO SERVICE ANY PART OF THE EXHAUST SYSTEM UNTIL IT IS COOLED. SPECIAL CARE SHOULD BE TAKEN WHEN WORKING NEAR THE CATALYTIC CONVERTER. THE TEMPERATURE OF THE CONVERTER RISES TO A HIGH LEVEL AFTER A SHORT PERIOD OF ENGINE OPERATION TIME.

Check catalytic converter for a flow restriction. (Refer to 11 - EXHAUST SYSTEM - DIAGNOSIS AND TESTING) Exhaust System Restriction Check for procedure.

Visually inspect the catalytic converter element by using a borescope or equivalent. Remove oxygen sensor(s) and insert borescope. If borescope is not available, remove converter and inspect element using a flashlight. Inspect element for cracked or melted substrate.

NOTE: Before replacing a catalytic converter, determine the root cause of failure. Most catalytic converter failures are caused by air, fuel or ignition problems. (Refer to Appropriate Diagnostic Information) for test procedures.

INSTALLATION

NOTE: Always work from the front to rear of exhaust system when aligning and tightening exhaust system components.

(1) Clean manifold to converter sealing surfaces.
(2) Position new gasket on exhaust manifold.

NOTE: If catalytic converter is being replaced, transfer downstream oxygen sensor to new converter.

(3) Loosely attach catalytic converter to exhaust manifold.
(4) Loosely install resonator/pipe and muffler/pipe assembly to catalytic converter outlet pipe.
(5) Install support isolators to muffler supports.
(6) Align exhaust system to maintain position and proper clearance with underbody parts. All support isolators should have equal load on them. Tighten fasteners attaching catalytic converter to exhaust manifold to 28 N·m (250 in. lbs.).
(7) Tighten resonator/pipe assembly band clamp to 54 N·m (40 ft. lbs.).
(8) Connect ground strap to muffler.
(9) Lower vehicle.
(10) Start the engine and inspect for exhaust leaks. Repair exhaust leaks as necessary.
(11) Check the exhaust system for contact with the body panels. Make the necessary ajustments, if needed.

CATALYTIC CONVERTER - FRONT - 2.7L

REMOVAL

(1) Disconnect negative battery cable.
(2) Disconnect upstream oxygen sensor connector.
(3) Remove 3 converter attaching nuts that are visible from the engine compartment (Fig. 5).
(4) Raise vehicle on hoist.
(5) Remove exhaust cross-under pipe (Refer to 11 - EXHAUST SYSTEM/CROSS-UNDER PIPE - REMOVAL).
(6) Remove remaining bolt attaching converter to exhaust manifold.
(7) Remove catalytic converter.
(8) Remove and discard gasket.

INSPECTION

WARNING: THE NORMAL OPERATING TEMPERATURE OF THE EXHAUST SYSTEM IS VERY HIGH. THEREFORE, NEVER ATTEMPT TO SERVICE ANY PART OF THE EXHAUST SYSTEM UNTIL IT IS COOLED. SPECIAL CARE SHOULD BE TAKEN WHEN WORKING NEAR THE CATALYTIC CONVERTER. THE TEMPERATURE OF THE CONVERTER RISES TO A HIGH LEVEL AFTER A SHORT PERIOD OF ENGINE OPERATION TIME.

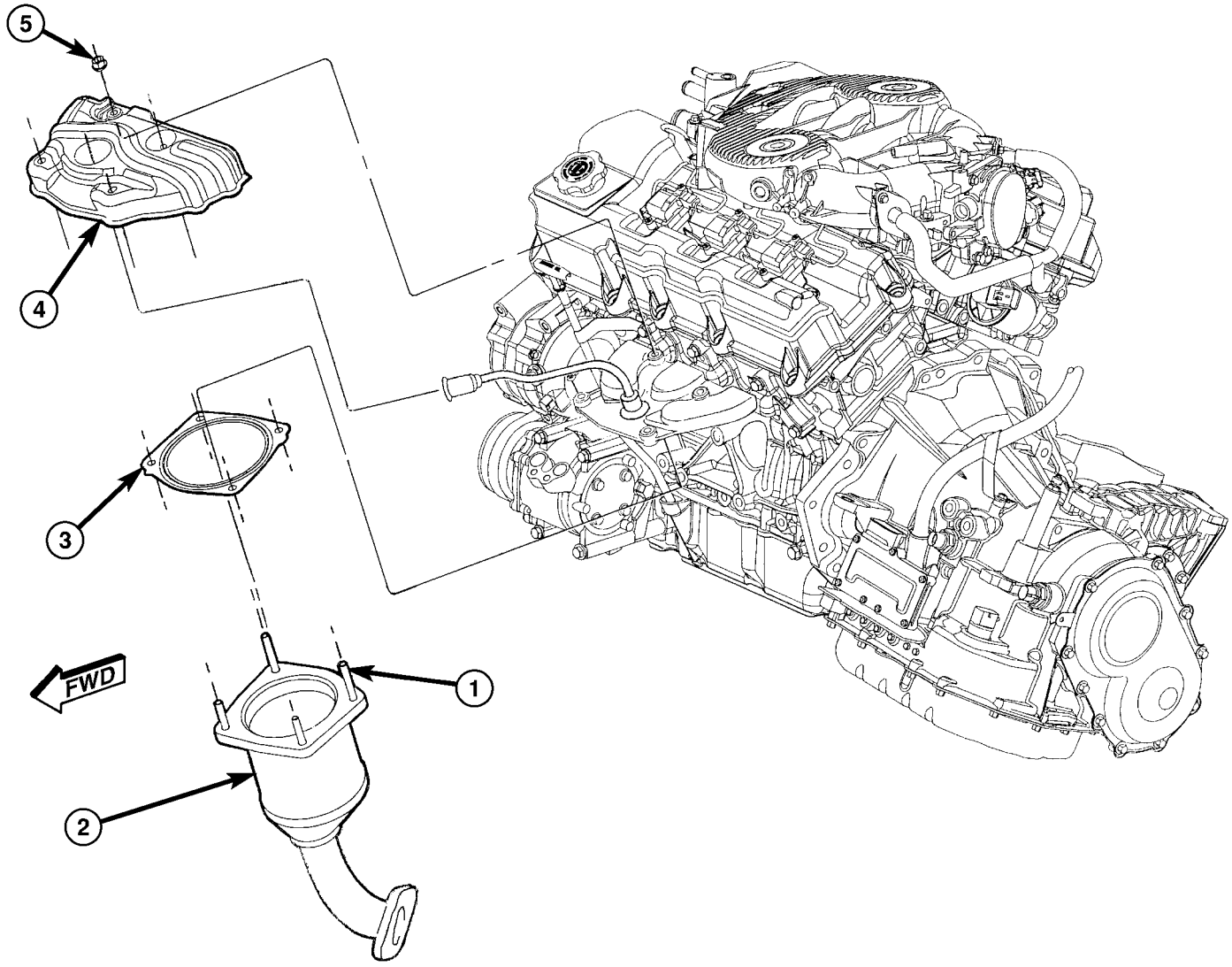

Fig. 5 CATALYTIC CONVERTER - FRONT 2.7L

1 - STUD
2 - CATALYTIC CONVERTER
3 - GASKET
4 - HEAT SHIELD
5 - NUT

CATALYTIC CONVERTER - FRONT - 2.7L (Continued)

Check catalytic converter for a flow restriction. (Refer to 11 - EXHAUST SYSTEM - DIAGNOSIS AND TESTING) Exhaust System Restriction Check for procedure.

Visually inspect the catalytic converter element by using a borescope or equivalent. Remove both oxygen sensors and insert borescope. If borescope is not available, remove converter and inspect element using a flashlight. Inspect element for cracked or melted substrate.

NOTE: Before replacing a catalytic converter, determine the root cause of failure. Most catalytic converter failures are caused by air, fuel or ignition problems. (Refer to Appropriate Diagnostic Information) for test procedures.

INSTALLATION

(1) Clean manifold to converter sealing surfaces.

(2) Position new gasket on converter inlet flange (Fig. 5).

(3) Ensure exhaust manifold heat shield is in position, and loosely install converter with lower attaching bolt to exhaust manifold.

(4) Lower vehicle.

(5) Install 3 nuts attaching converter to manifold. Torque nuts to 28 N·m (250 in. lbs.).

(6) Reconnect upstream oxygen sensor.

(7) Raise vehicle.

(8) Torque remaining attaching bolt to 28 N·m (250 in. lbs.).

(9) Install cross-under pipe (Refer to 11 - EXHAUST SYSTEM/CROSS-UNDER PIPE - INSTALLATION).

(10) Lower vehicle.

(11) Connect negative battery cable.

(12) Start the engine and inspect for exhaust leaks. Repair exhaust leaks as necessary.

(13) Check the exhaust system for contact with the body panels. Make the necessary ajustments, if needed.

CATALYTIC CONVERTER - REAR - 2.7L

REMOVAL

(1) Disconnect negative battery cable.

(2) Raise vehicle on hoist.

(3) Remove entire exhaust system from vehicle (Refer to 11 - EXHAUST SYSTEM - REMOVAL)

(4) Remove exhaust cross-under pipe (Refer to 11 - EXHAUST SYSTEM/CROSS-UNDER PIPE - REMOVAL).

(5) Disconnect upstream oxgen sensor.

(6) Remove nuts attaching converter to exhaust manifold (Fig. 6).

(7) Remove exhaust manifold heat shield.

(8) Remove catalytic converter.

(9) Remove and discard gasket.

INSPECTION

WARNING: THE NORMAL OPERATING TEMPERATURE OF THE EXHAUST SYSTEM IS VERY HIGH. THEREFORE, NEVER ATTEMPT TO SERVICE ANY PART OF THE EXHAUST SYSTEM UNTIL IT IS COOLED. SPECIAL CARE SHOULD BE TAKEN WHEN WORKING NEAR THE CATALYTIC CONVERTER. THE TEMPERATURE OF THE CONVERTER RISES TO A HIGH LEVEL AFTER A SHORT PERIOD OF ENGINE OPERATION TIME.

Check catalytic converter for a flow restriction. (Refer to 11 - EXHAUST SYSTEM - DIAGNOSIS AND TESTING) Exhaust System Restriction Check for procedure.

Visually inspect the catalytic converter element by using a borescope or equivalent. Remove both oxygen sensors and insert borescope. If borescope is not available, remove converter and inspect element using a flashlight. Inspect element for cracked or melted substrate.

NOTE: Before replacing a catalytic converter, determine the root cause of failure. Most catalytic converter failures are caused by air, fuel or ignition problems. (Refer to Appropriate Diagnostic Information) for test procedures.

CATALYTIC CONVERTER - REAR - 2.7L (Continued)

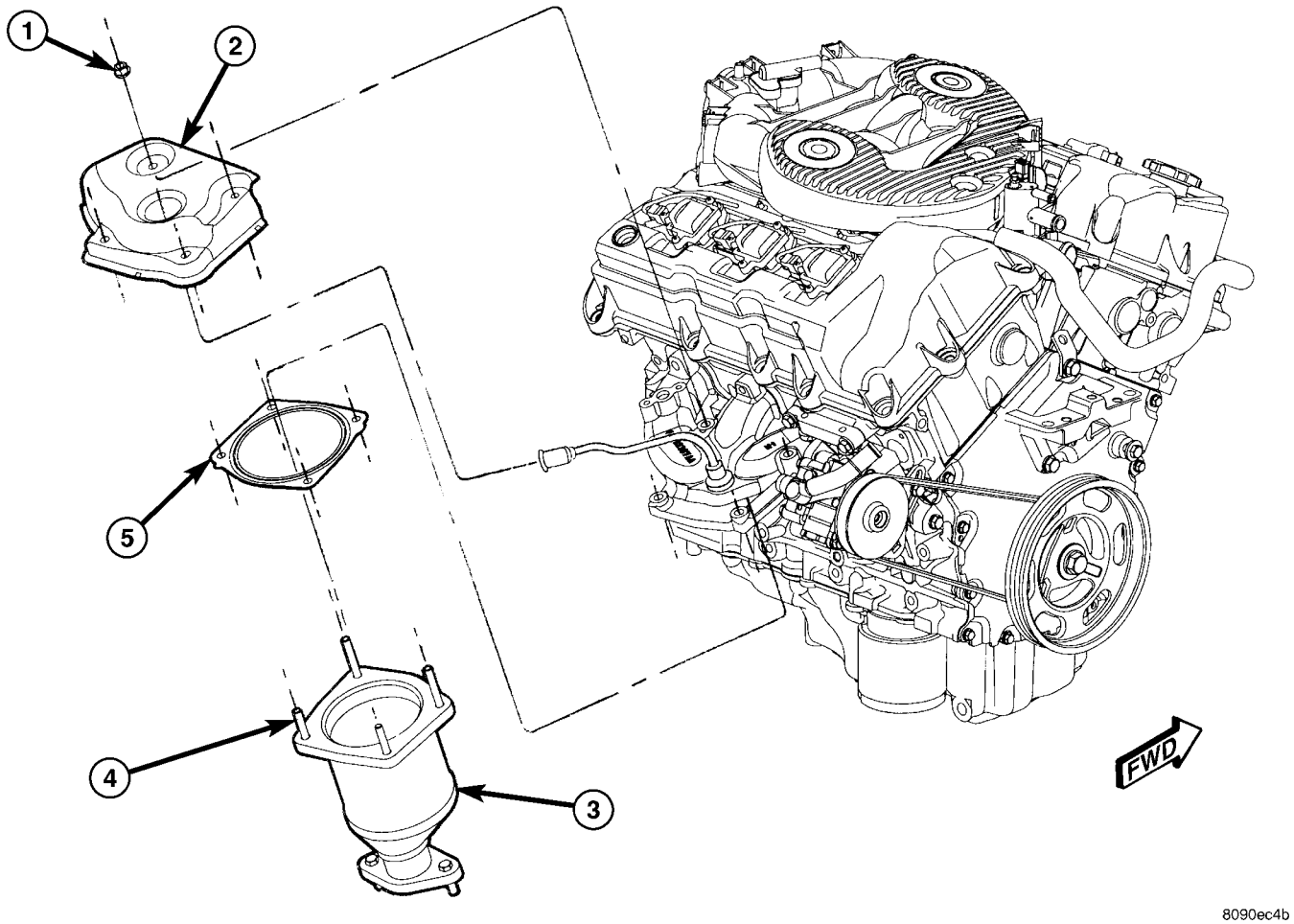

Fig. 6 CATALYTIC CONVERTER - REAR 2.7L

1 - NUT
2 - HEAT SHIELD
3 - CATALYTIC CONVERTER - REAR
4 - STUD
5 - GASKET

INSTALLATION

(1) Clean manifold to converter sealing surfaces.

(2) Position new gasket on converter inlet flange (Fig. 6).

(3) Install converter to exhaust manifold.

(4) Install exhaust manifold heat shield into position.

(5) Install nuts attaching converter to manifold. Torque nuts to 28 N·m (250 in. lbs.).

(6) Connect upstream oxygen sensor.

(7) Install cross-under pipe(Refer to 11 - EXHAUST SYSTEM/CROSS-OVER PIPE - INSTALLATION).

(8) Install exhaust system on vehicle (Refer to 11 - EXHAUST SYSTEM - INSTALLATION).

(9) Lower vehicle.

(10) Connect negative battery cable.

(11) Start the engine and inspect for exhaust leaks. Repair exhaust leaks as necessary.

(12) Check the exhaust system for contact with the body panels. Make the necessary ajustments, if needed.

CROSS-UNDER PIPE - 2.7L

REMOVAL

WARNING: THE NORMAL OPERATING TEMPERATURE OF THE EXHAUST SYSTEM IS VERY HIGH. THEREFORE, NEVER WORK AROUND OR ATTEMPT TO SERVICE ANY PART OF THE EXHAUST SYSTEM UNTIL IT IS COOLED. SPECIAL CARE SHOULD BE TAKEN WHEN WORKING NEAR THE CATALYTIC CONVERTER. THE TEMPERATURE OF THE CONVERTER RISES TO A HIGH LEVEL AFTER A SHORT PERIOD OF ENGINE OPERATION TIME.

(1) Raise vehicle on hoist.

(2) Disconnect downstream oxygen sensor connectors.

(3) Remove oil pan to transmission structural collar. (Refer to 9 - ENGINE/ENGINE BLOCK/STRUCTURAL COVER - REMOVAL)

(4) Disconnect exhaust system pipe from cross-under pipe.

(5) Remove fasteners attaching cross-under pipe to catalytic converters (Fig. 7).

(6) Remove cross-under pipe (Fig. 7).

INSTALLATION

(1) Install new gasket to lower part of rear catalytic converter. If installing new cross-under pipe, transfer oxygen sensors to new pipe (Fig. 7).

(2) Loosely install cross-under pipe to catalytic converters (Fig. 7). Snug nuts up equally using hand pressure.

(3) Tighten 2 nuts for cross-under pipe to rear catalytic converter to 28 N·m (250 in. lbs.) (Fig. 7).

(4) Tighten 2 nuts for cross-under pipe to front catalytic converter to 28 N·m (250 in. lbs.) (Fig. 7).

(5) Connect exhaust system pipe to cross-under pipe. Tighten attaching fasteners to 28 N·m (250 in. lbs.)

(6) Install oil pan to transmission structural collar-.(Refer to 9 - ENGINE/ENGINE BLOCK/STRUCTURAL COVER - INSTALLATION)

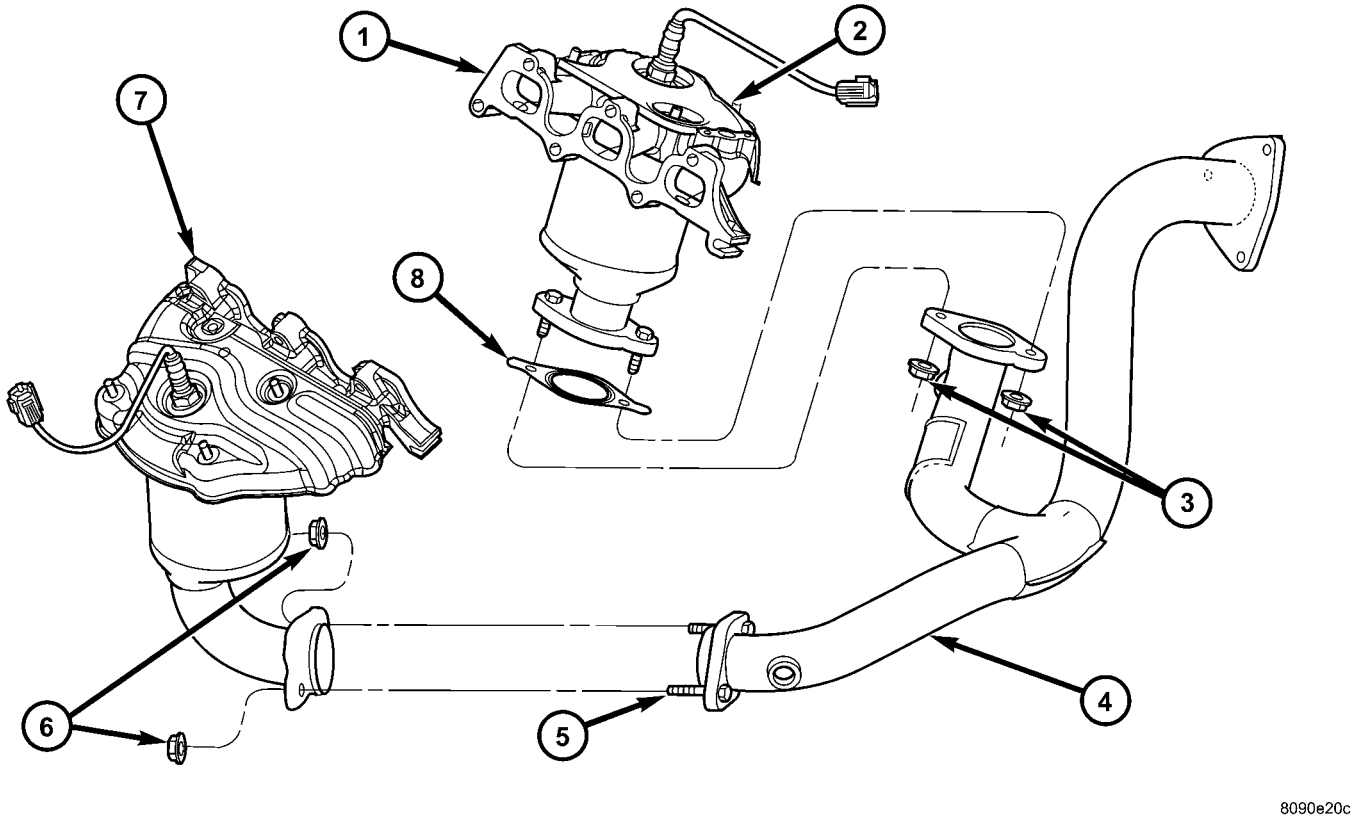

Fig. 7 CROSS-UNDER PIPE

1 - EXHAUST MANIFOLD - REAR
2 - CATALYTIC CONVERTER ATTACHING STUD
3 - NUTS - PIPE-TO-REAR CONVERTER
4 - CROSS-UNDER PIPE
5 - BOLT - PIPE-TO-FRONT CONVERTER
6 - NUT - PIPE-TO-FRONT CONVERTER
7 - EXHAUST MANIFOLD - FRONT
8 - GASKET - PIPE-TO-CONVERTER

CROSS-UNDER PIPE - 2.7L (Continued)

(7) Reconnect downstream oxygen sensor connectors.
(8) Lower vehicle.
(9) Start the engine and inspect for exhaust leaks. Repair exhaust leaks as necessary.
(10) Check the exhaust system for contact with the body panels. Make the necessary ajustments, if needed.

EXHAUST PIPE - CROSS-UNDER PIPE TO RESONATOR PIPE - 2.7L

REMOVAL

NOTE: In the following procedure it is not necessary to separate the muffler/pipe assembly from the resonator/pipe assembly. They can both be removed as an assembly.

WARNING: THE NORMAL OPERATING TEMPERATURE OF THE EXHAUST SYSTEM IS VERY HIGH. THEREFORE, NEVER WORK AROUND OR ATTEMPT TO SERVICE ANY PART OF THE EXHAUST SYSTEM UNTIL IT IS COOLED. SPECIAL CARE SHOULD BE TAKEN WHEN WORKING NEAR THE CATALYTIC CONVERTER. THE TEMPERATURE OF THE CONVERTER RISES TO A HIGH LEVEL AFTER A SHORT PERIOD OF ENGINE OPERATION TIME.

(1) Raise vehicle on hoist and apply penetrating oil to resonator/pipe assembly band clamp, and the fasteners that connect the exhaust system to the cross-under pipe (Fig. 1).
(2) Remove ground strap from muffler.
(3) Loosen band clamp for resonator/pipe assembly.

CAUTION: Do not use any tools to remove the rubber isolators–remove by hand only. Soapy water or silicone–based lubricant spray may be used to assist removal/installation of isolators. DO NOT use a petroleum–based lubricant on the isolators, as damage to the rubber material can occur.

(4) Remove support isolators from muffler supports.
(5) Remove resonator/pipe and muffler/pipe as an assembly.
(6) Remove fasteners that attach exhaust pipe to cross-under pipe.
(7) Remove exhaust pipe.

INSTALLATION

NOTE: Always work from the front to rear of exhaust system when aligning and tightening exhaust system components.

(1) Loosely attach exhaust pipe to cross-under pipe.
(2) Loosely install resonator/pipe and muffler/pipe assembly to exhaust pipe.
(3) Install support isolators to muffler supports.
(4) Align exhaust pipe and resonator/muffler pipe assembly to maintain position and proper clearance with underbody parts. All support isolators should have equal load on them. Tighten fasteners attaching exhaust pipe to cross-under pipe to 28 N·m (250 in. lbs.).
(5) Tighten resonator/pipe assembly band clamp to 54 N·m (40 ft. lbs.).
(6) Connect ground strap to muffler.
(7) Lower vehicle.
(8) Start the engine and inspect for exhaust leaks. Repair exhaust leaks as necessary.
(9) Check the exhaust system for contact with the body panels. Make the necessary ajustments, if needed.

MUFFLER/PIPE ASSEMBLY

REMOVAL

WARNING: THE NORMAL OPERATING TEMPERATURE OF THE EXHAUST SYSTEM IS VERY HIGH. THEREFORE, NEVER WORK AROUND OR ATTEMPT TO SERVICE ANY PART OF THE EXHAUST SYSTEM UNTIL IT IS COOLED. SPECIAL CARE SHOULD BE TAKEN WHEN WORKING NEAR THE CATALYTIC CONVERTER. THE TEMPERATURE OF THE CONVERTER RISES TO A HIGH LEVEL AFTER A SHORT PERIOD OF ENGINE OPERATION TIME.

(1) Raise vehicle on hoist and apply penetrating oil to band clamp of component being removed (Fig. 1).
(2) Remove ground strap from muffler.
(3) Loosen band clamp for muffler/pipe assembly.

CAUTION: Do not use any tools to remove the rubber isolators–remove by hand only. Soapy water or silicone–based lubricant spray may be used to assist removal/installation of isolators. DO NOT use a petroleum–based lubricant on the isolators, as damage to the rubber material can occur.

(4) Remove support isolators from muffler supports (Fig. 2).

MUFFLER/PIPE ASSEMBLY (Continued)

(5) Remove muffler/pipe assembly from resonator pipe.

NOTE: Band clamps are spot welded to exhaust system. If a band clamp must be replaced, the spot weld must be ground off the exhaust pipe.

NOTE: When replacement is required on any component of the exhaust system, it is most important that original equipment parts (or their equivalent) be used for the following reasons:

- To insure proper alignment with other parts in the system.
- Provide acceptable exhaust noise levels and does not change exhaust system back pressure that could affect emissions and performance.

INSTALLATION

NOTE: Always work from the front to rear of exhaust system when aligning and tightening exhaust system components.

(1) Loosely install muffler/pipe assembly onto resonator pipe.
(2) Install support isolators to muffler supports.
(3) Align muffler/pipe assembly to maintain position and proper clearance with underbody parts. All support isolators should have equal load on them. Tighten band clamp to 54 N·m (40 ft. lbs.).
(4) Connect ground strap to muffler.
(5) Lower vehicle.
(6) Start the engine and inspect for exhaust leaks. Repair exhaust leaks as necessary.
(7) Check the exhaust system for contact with the body panels. Make the necessary ajustments, if needed.

RESONATOR/PIPE ASSEMBLY

REMOVAL

WARNING: THE NORMAL OPERATING TEMPERATURE OF THE EXHAUST SYSTEM IS VERY HIGH. THEREFORE, NEVER WORK AROUND OR ATTEMPT TO SERVICE ANY PART OF THE EXHAUST SYSTEM UNTIL IT IS COOLED. SPECIAL CARE SHOULD BE TAKEN WHEN WORKING NEAR THE CATALYTIC CONVERTER. THE TEMPERATURE OF THE CONVERTER RISES TO A HIGH LEVEL AFTER A SHORT PERIOD OF ENGINE OPERATION TIME.

(1) Raise vehicle on hoist and apply penetrating oil to band clamps of components being removed (Fig. 1).
(2) Remove muffler/pipe assembly (Refer to 11 - EXHAUST SYSTEM/MUFFLER - REMOVAL).
(3) Loosen band clamp for resonator/pipe assembly.
(4) Remove resonator/pipe assembly.

NOTE: Band clamps are spot welded to exhaust system. If a band clamp must be replaced, the spot weld must be ground off the exhaust pipe.

NOTE: When replacement is required on any component of the exhaust system, it is most important that original equipment parts (or their equivalent) be used for the following reasons:

- To insure proper alignment with other parts in the system.
- Provide acceptable exhaust noise levels and does not change exhaust system back pressure that could affect emissions and performance.

INSTALLATION

NOTE: Always work from the front to rear of exhaust system when aligning and tightening exhaust system components.

(1) Loosely install resonator/pipe assembly and muffler/pipe assembly.
(2) Install support isolators to muffler supports.
(3) Align resonator/pipe assembly and muffler/pipe assembly to maintain position and proper clearance with underbody parts. All support isolators should have equal load on them. Tighten resonator/pipe assembly band clamp to 54 N·m (40 ft. lbs.).
(4) Tighten muffler/pipe assembly band clamp to 54 N·m (40 ft. lbs.).
(5) Connect ground strap to muffler.
(6) Lower vehicle.
(7) Start the engine and inspect for exhaust leaks. Repair exhaust leaks as necessary.
(8) Check the exhaust system for contact with the body panels. Make the necessary ajustments, if needed.

HEAT SHIELDS

DESCRIPTION

The exhaust system heat shields are attached to the under body of the vehicle (Fig. 8).

OPERATION

Heat shields are needed to protect both the vehicle and the environment from the high temperatures developed near the catalytic converter.

Avoid application of rust prevention compounds or undercoating materials to exhaust system floor pan heat shields on cars so equipped. Light over spray near the edges is permitted. Application of coating will greatly reduce the efficiency of the heat shields resulting in excessive floor pan temperatures and objectionable fumes.

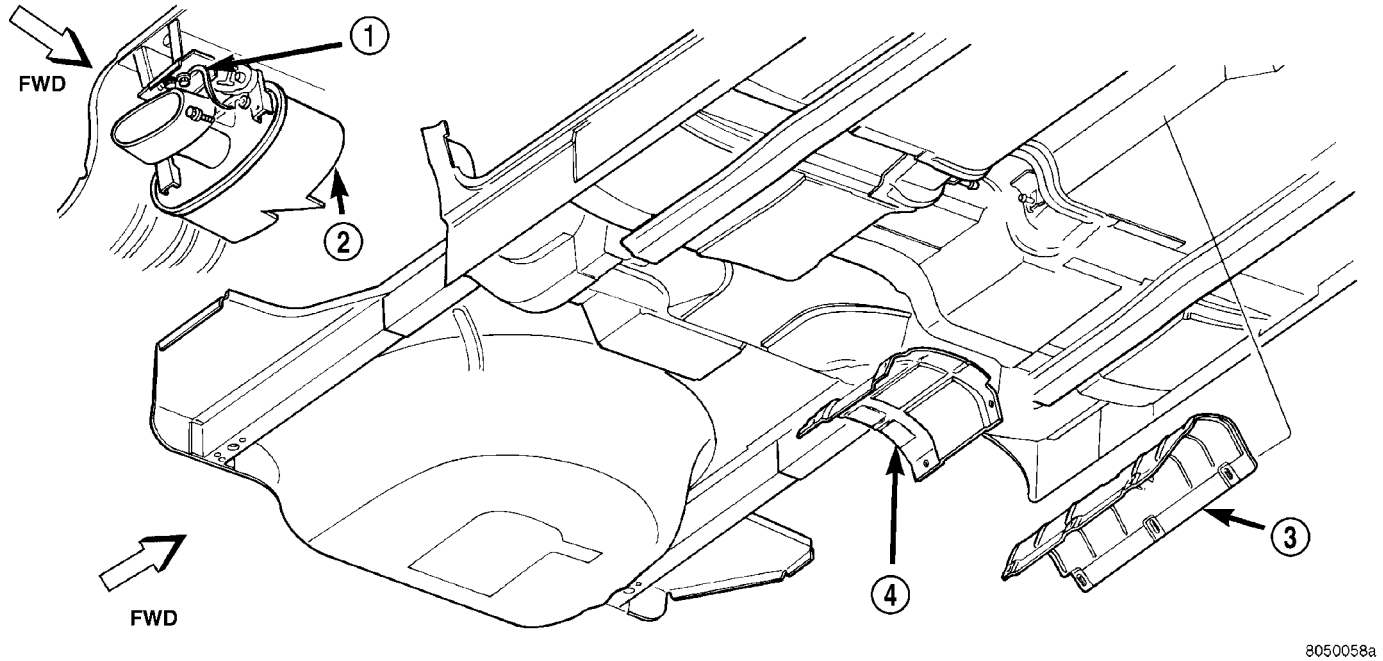

Fig. 8 Heat Shields

1 - GROUND STRAP
2 - MUFFLER
3 - HEAT SHIELD
4 - RESONATOR HEAT SHIELD

FRAME & BUMPERS

TABLE OF CONTENTS

page

BUMPERS
SPECIFICATIONS - TORQUE 1
FRONT FASCIA
REMOVAL
REMOVAL - JR-41 1
REMOVAL - JR-27 1
INSTALLATION
INSTALLATION - JR-41 3
INSTALLATION - JR-27 3
REAR BUMPER REINFORCEMENT
REMOVAL 3
INSTALLATION 3
REAR FASCIA
REMOVAL
REMOVAL - JR-41 3
REMOVAL - JR-27 4
INSTALLATION
INSTALLATION - JR-41 4
INSTALLATION - JR-27 4
FRAME
SPECIFICATIONS - FRAME DIMENSIONS 5
FRONT SUSPENSION CROSSMEMBER
REMOVAL 9
INSTALLATION 9
REAR SUSPENSION CROSSMEMBER
DESCRIPTION 10
REMOVAL 10
INSTALLATION 12
FRONT TOW HOOK
REMOVAL 13
INSTALLATION 13

BUMPERS

SPECIFICATIONS - TORQUE

DESCRIPTION	TORQUE
Rear Bumper Reinforcement	
Attaching Nut	28 N·m (21 ft. lbs.)
Front Suspension Crossmember	
Attaching Bolt Front	109 N·m (80 ft. lbs.)
Attaching Bolt Rear	102 N·m (75 ft. lbs.)
Radiator Support Crossmember	
Attaching Bolts	115 N·m (85 ft. lbs.)

FRONT FASCIA

REMOVAL

REMOVAL - JR-41

It is not necessary to remove the headlamp assemblies to remove the front bumper fascia.

(1) Release hood latch and open hood.

(2) Remove fasteners attaching fascia to front splash shields (Fig. 1).

(3) Hoist and support vehicle on safety stands. (Refer to LUBRICATION & MAINTENANCE/HOISTING - STANDARD PROCEDURE), for proper hoisting and jacking procedures.

(4) Remove inner wheelhouse front wheel house splash shield as necessary to access nut attaching fascia wings to fender.

(5) Remove fasteners attaching top of fascia to upper crosmember.

(6) Remove fasteners attaching bottom of fascia to radiator closure panel and to brake ducts.

(7) Remove screws attaching fascia to front fenders.

(8) Slide fascia forward to disengage hooks attaching fascia to bottom of fender.

(9) Remove fascia from vehicle.

(10) Disengage fog lamp wire connector from body harness, if equipped.

REMOVAL - JR-27

It is not necessary to remove the headlamp assemblies to remove the front bumper fascia.

(1) Release hood latch and open hood.

(2) Remove fasteners attaching top of grille to headlamp adapter assembly (Fig. 2).

(3) Hoist and support vehicle on safety stands. (Refer to LUBRICATION & MAINTENANCE/HOISTING - STANDARD PROCEDURE), for proper hoisting and jacking procedures.

(4) Remove inner wheelhouse front wheel house splash shield as necessary to access nut attaching fascia wings to fender.

(5) Remove fasteners attaching bottom of fascia to radiator closure panel and to brake ducts.

(6) Remove screws attaching fascia to front fenders.

(7) Slide fascia forward and separate fascia from vehicle.

(8) Disengage fog lamp wire connectors from back of fog lamps, if so equipped.

FRONT FASCIA (Continued)

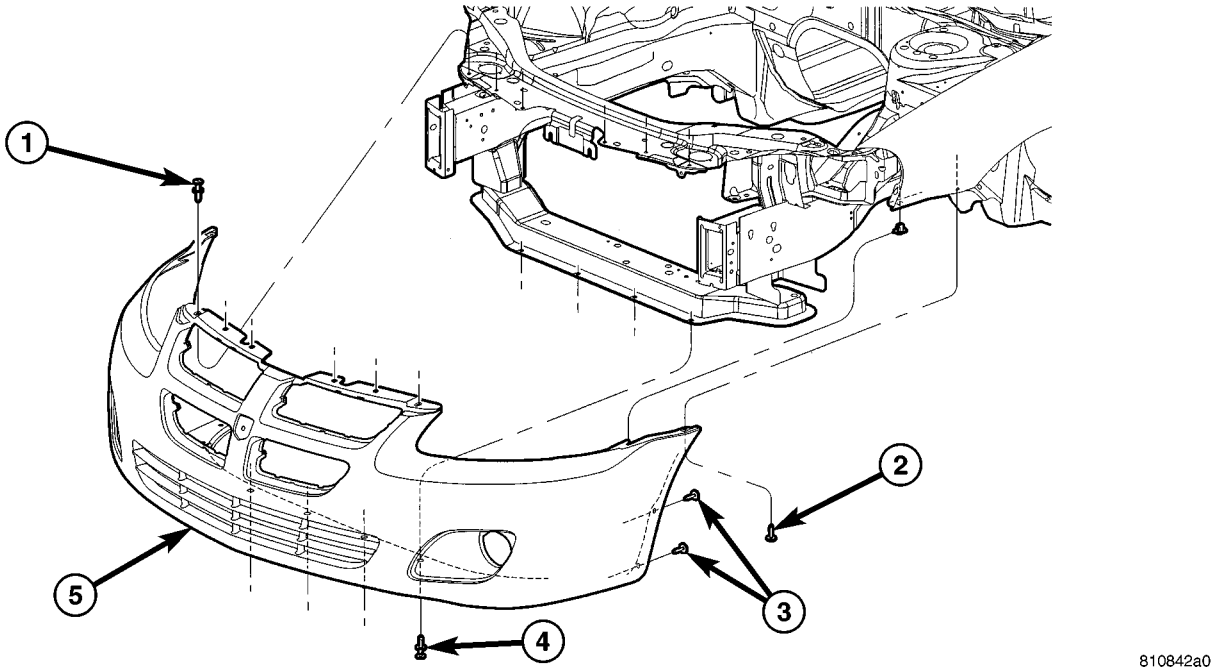

Fig. 1 FRONT FASCIA JR-41

1 - PUSH PIN (FASCIA TO UPPER CROSMEMBER)
2 - SCREW AND WASHER (FASCIA TO FENDER)
3 - SCREW (FASCIA TO SPLASH SHIELD)
4 - PUSH PIN (FASCIA TO LOWER CROSSMEMBER AND BRAKE DUCTS)
5 - FRONT FASCIA

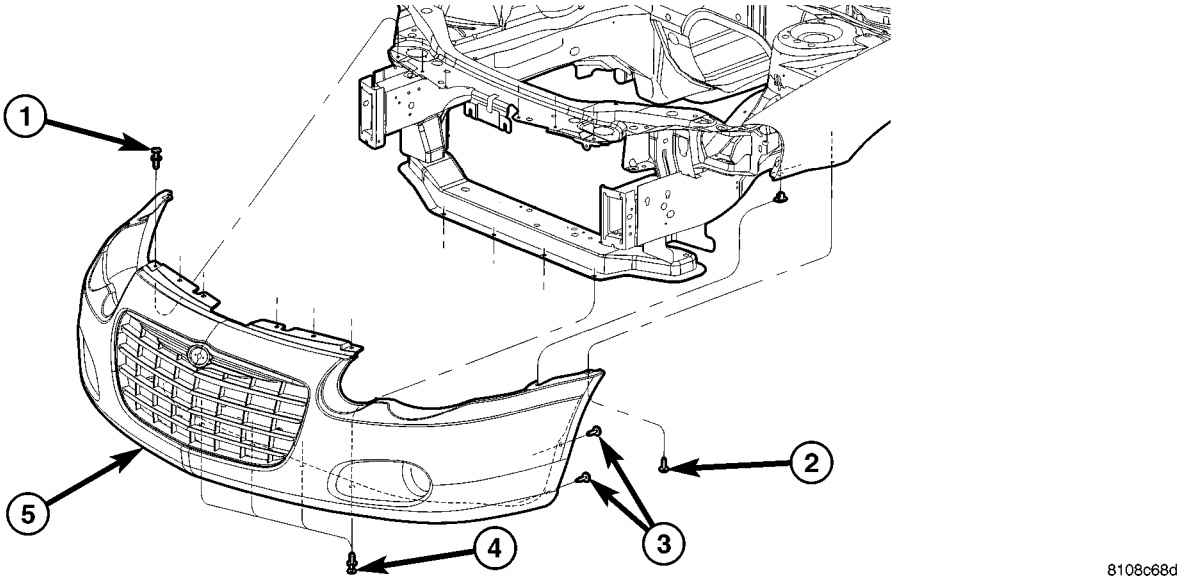

Fig. 2 FRONT FASCIA - JR-27

1 - PUSH PIN(S) TO UPPER RADIATOR CROSSMEMBER
2 - SCREW/WASHER FRONT FASCIA TO FRONT FENDER
3 - SCREW/WASHER FRONT FASCIA TO SPLASH SHIELD
4 - PUSH PIN(S) FRONT FASCIA TO LOWER CROSSMEMBER
5 - FRONT FASCIA

FRONT FASCIA (Continued)

INSTALLATION

INSTALLATION - JR-41

(1) Ensure that energy management foam is properly installed in front fascia.

(2) Engage fog lamp wire connector to body wire harness, if equipped.

(3) Place fascia on position on vehicle (Fig. 1).

(4) Install fasteners attaching fascia to front fenders.

(5) Install fasteners attaching bottom of fascia to radiator closure panel and brake ducts.

(6) Install fasteners attaching top of fascia to upper crossmember.

(7) Install front wheelhouse splash shields.

INSTALLATION - JR-27

(1) Ensure that energy management foam is properly installed in front fascia (Fig. 3).

(2) Engage fog lamp wire connectors to back of fog lamps, if so equipped.

(3) Position fascia on vehicle and slide rearward, being careful to ensure that the grille slides under hood latch (Fig. 2).

(4) Install fasteners attaching bottom of fascia to radiator closure panel and brake ducts.

(5) Install fasteners attaching top of fascia to upper crossmember.

(6) Install front wheelhouse splash shields.

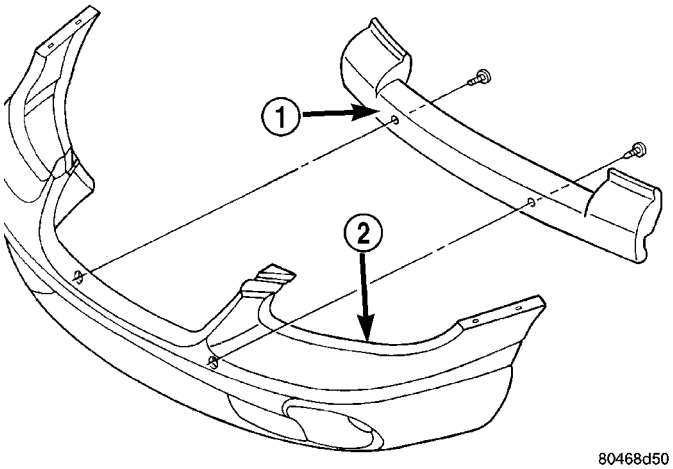

Fig. 3 Front Bumper Energy Management Foam

1 - FRONT BUMPER ENERGY MANAGEMENT FOAM
2 - FRONT FASCIA

REAR BUMPER REINFORCEMENT

REMOVAL

(1) Remove rear fascia.

(2) Support bumper reinforcement on a suitable lifting device.

(3) Mark position of nuts on frame rail to aid in installation.

(4) Remove nuts attaching rear bumper reinforcement to frame rail (Fig. 4).

(5) Remove bumper reinforcement from vehicle.

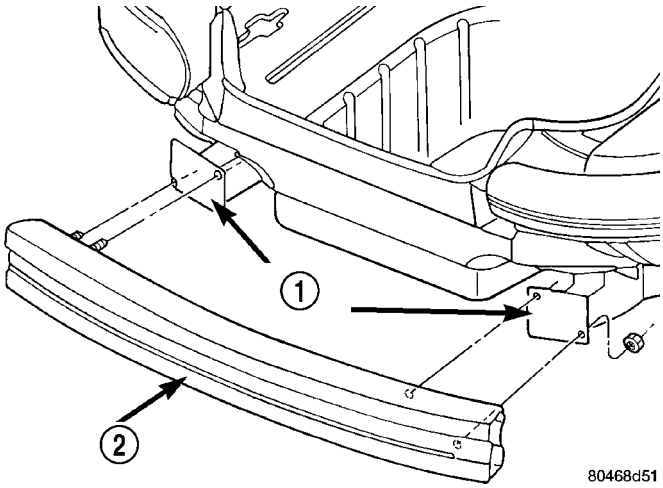

Fig. 4 Rear Bumper Reinforcement

1 - FRAME RAIL
2 - FRONT BUMPER REINFORCEMENT

INSTALLATION

(1) Position rear bumper reinforcement on vehicle.

(2) Install nuts attaching bumper reinforcement to frame rail. Use marks made previously to properly position bumper reinforcement.

(3) Tighten nuts to 28 N·m (250 in. lbs.) torque.

(4) Install rear fascia.

REAR FASCIA

REMOVAL

REMOVAL - JR-41

(1) Release decklid latch and open decklid.

(2) Remove left rear tail lamp and disengage license plate wire connector from tail lamp. (Refer to 8 - ELECTRICAL/LAMPS/LIGHTING - EXTERIOR/TAIL LAMP - REMOVAL).

(3) Peel back trunk carpeting at tail lamps and remove nut and washer from fascia to quarter panel bracket. Discard nut and washer.

REAR FASCIA (Continued)

(4) Remove push-in fasteners attaching decklid slam bumpers to top of fascia.

(5) Remove push-in fastener attaching center of fascia to rear closure panel.

(6) Remove screws attaching fascia to rear wheelhouse splash shields (Fig. 5).

(7) Remove screws attaching fascia to quarter panel at the wheelhouse opening.

(8) Slide fascia rearward to disengage hooks holding fascia to bottom of quarter panel.

(9) Remove fascia from vehicle.

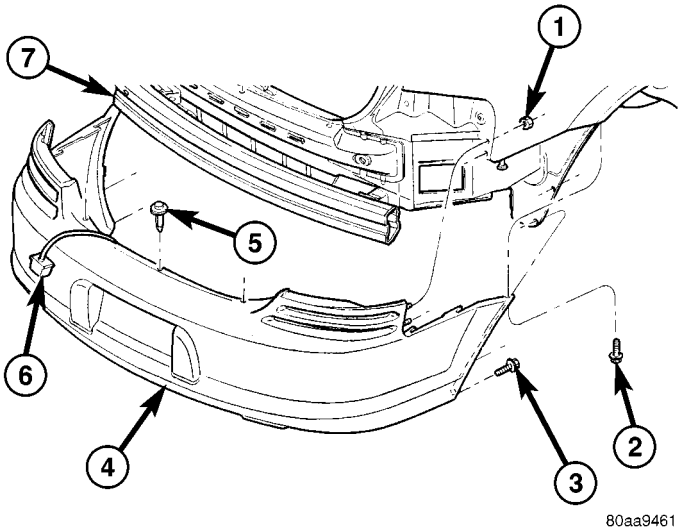

Fig. 5 REAR FASCIA

1 - NUT (FASCIA TO QUARTER PANEL)
2 - SCREW AND WASHER (FASCIA TO QUARTER PANEL)
3 - SCREW (FASCIA TO SPLASHSHIELD)
4 - REAR FASCIA
5 - PUSH PIN (FASCIA TO DECKLID OPENING REINFORCMENT)
6 - LICENSE PLATE LAMP HARNESS
7 - BUMPER REINFORCEMENT

REMOVAL - JR-27

(1) Release decklid latch and open decklid.

(2) Remove tail lamps.

(3) Remove push-in fasteners attaching decklid slam bumpers to top of fascia.

(4) Remove push-in fastener attaching center of fascia to rear closure panel.

(5) Remove screws attaching fascia to rear wheelhouse splash shields (Fig. 6).

(6) Remove screws attaching fascia to quarter panel at the wheelhouse opening.

(7) Slide fascia rearward to disengage hooks holding fascia to bottom of quarter panel.

(8) Remove fascia from vehicle.

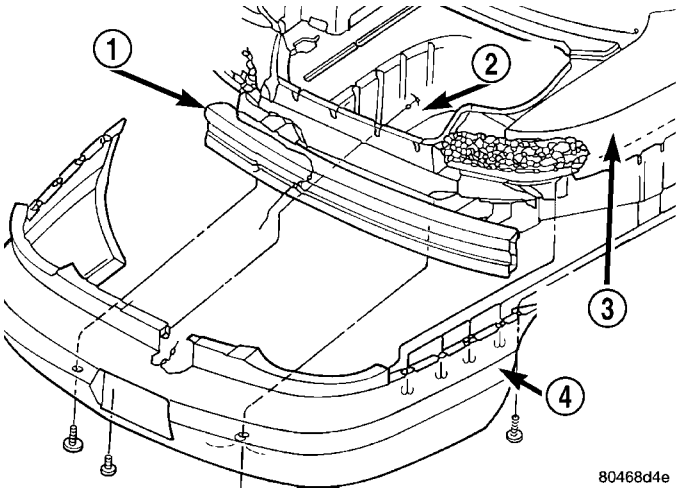

Fig. 6 REAR FASCIA

1 - REAR BUMPER REINFORCEMENT
2 - TRUNK
3 - QUARTER PANEL
4 - REAR FASCIA

INSTALLATION

INSTALLATION - JR-41

(1) Ensure that the energy management foam is properly installed in rear fascia.

(2) Position fascia on vehicle.

(3) Slide fascia forward to engage hooks attaching fascia to bottom of quarter panel.

(4) Install push-in fastener attaching center of fascia to rear closure panel.

(5) Install push-in fasteners attaching decklid slam bumpers to top of fascia.

(6) Install new nut and washer to fascia to quarter panel bracket located in the trunk area.

(7) Install screws attaching fascia to quarter panel at wheelhouse opening.

(8) Install fasteners attaching fascia to rear wheelhouse splash shields.

(9) Engage license plate wire connector to left tail lamp.

(10) Install tail lamps. (Refer to 8 - ELECTRICAL/LAMPS/LIGHTING - EXTERIOR/TAIL LAMP - INSTALLATION).

INSTALLATION - JR-27

(1) Ensure that the energy management foam is properly installed in rear fascia (Fig. 7).

(2) Slide fascia forward to engage hooks attaching fascia to bottom of quarter panel.

(3) Install push-in fastener attaching center of fascia to rear closure panel.

(4) Install push-in fasteners attaching decklid slam bumpers to top of fascia.

(5) Install screws attaching fascia to quarter panel at wheelhouse opening.

REAR FASCIA (Continued)

(6) Install fasteners attaching fascia to rear wheelhouse splash shields.

(7) Engage license plate wire connector to left tail lamp.

(8) Install tail lamps. (Refer to 8 - ELECTRICAL/ LAMPS/LIGHTING - EXTERIOR/TAIL LAMP - INSTALLATION).

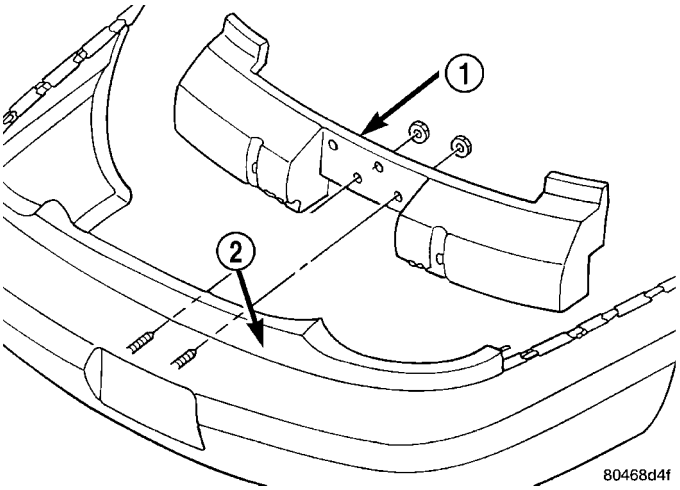

Fig. 7 REAR BUMPER ENERGY MANAGEMENT FOAM

1 - ENERGY MANAGEMENT FOAM
2 - REAR BUMPER FASCIA

FRAME

SPECIFICATIONS - FRAME DIMENSIONS

Frame dimensions are listed in metric scale. All dimensions are from center to center of Principal Locating Point (PLP), or from center to center of PLP and fastener location.

VEHICLE PREPARATION

Position the vehicle on a level work surface. Using screw or bottle jacks, adjust the vehicle PLP heights to the specified dimension above a level work surface. Vertical dimensions can be taken from the work surface to the locations indicated were applicable.

FRAME (Continued)

INDEX

DESCRIPTION	FIGURE
ENGINE COMPARTMENT TOP VIEW	8
ENGINE COMPARTMENT SIDE VIEW	9
FORWARD FRAME SECTION BOTTOM VIEW	10
REAR FRAME SECTION SIDE VIEW	11
REAR FRAME SECTION BOTTOM VIEW	12

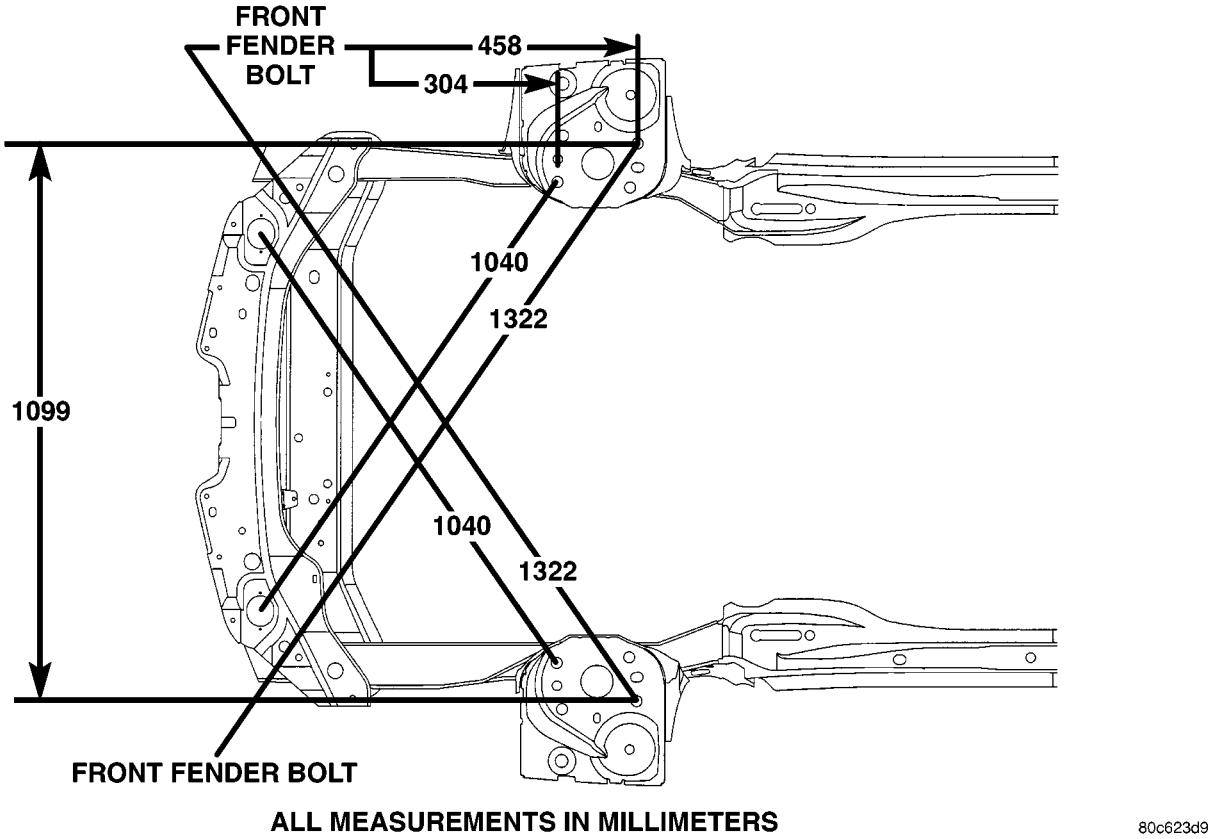

Fig. 8 ENGINE COMPARTMENT TOP VIEW

FRAME (Continued)

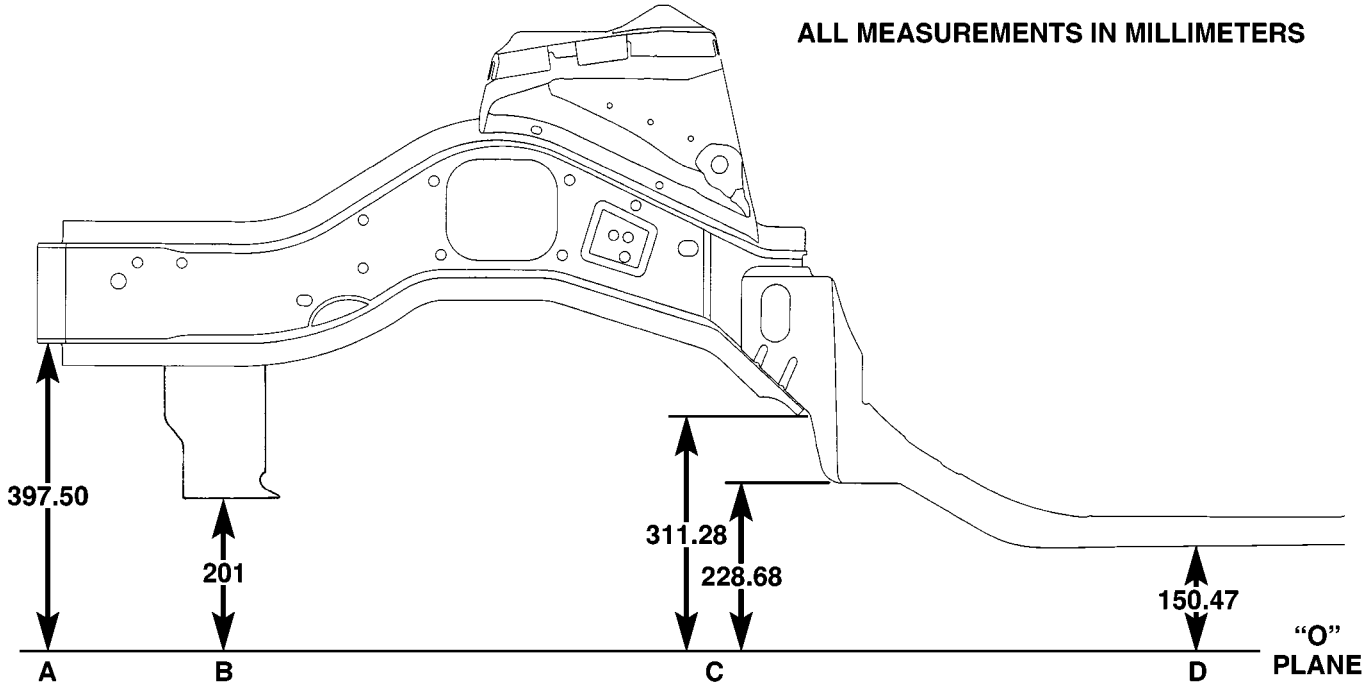

A. BOTTOM OF EXTENSION
B. BOTTOM OF RADIATOR CLOSURE
C. ENGINE COMPARTMENT REAR PLP
D. PLP

80c623da

Fig. 9 ENGINE COMPARTMENT SIDE VIEW

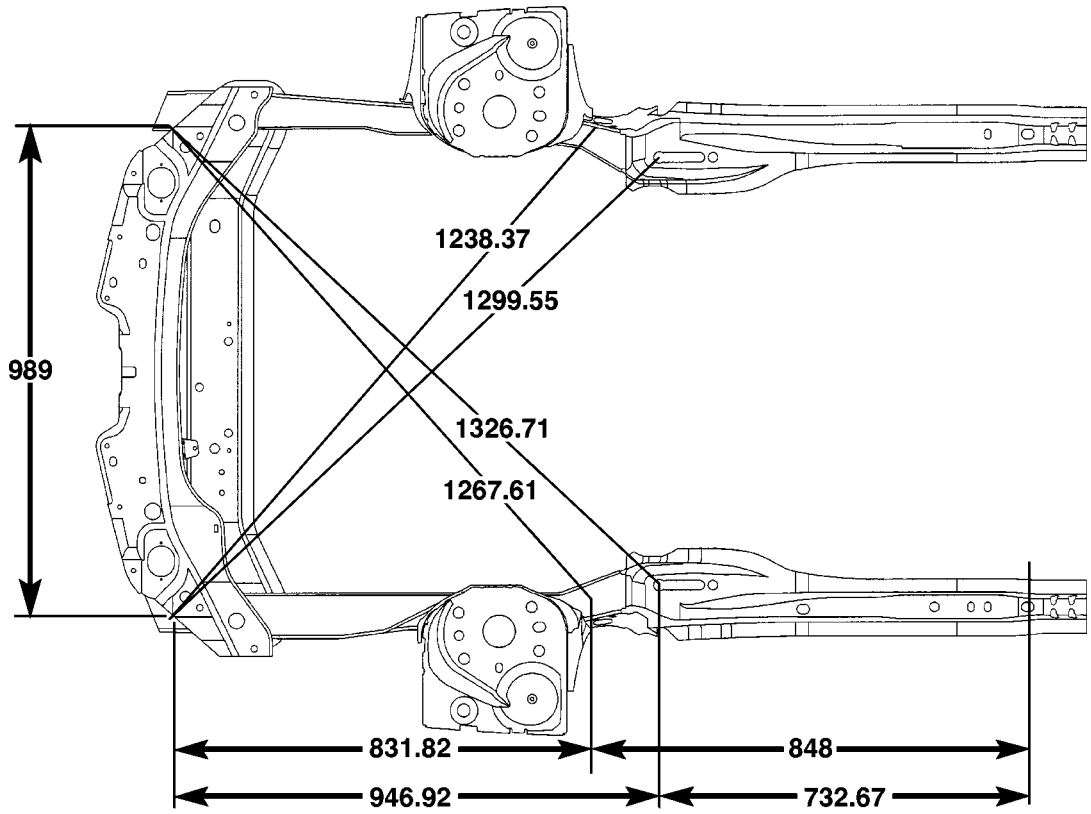

ALL MEASUREMENTS IN MILLIMETERS

80c623db

Fig. 10 FORWARD FRAME SECTION BOTTOM VIEW

FRAME (Continued)

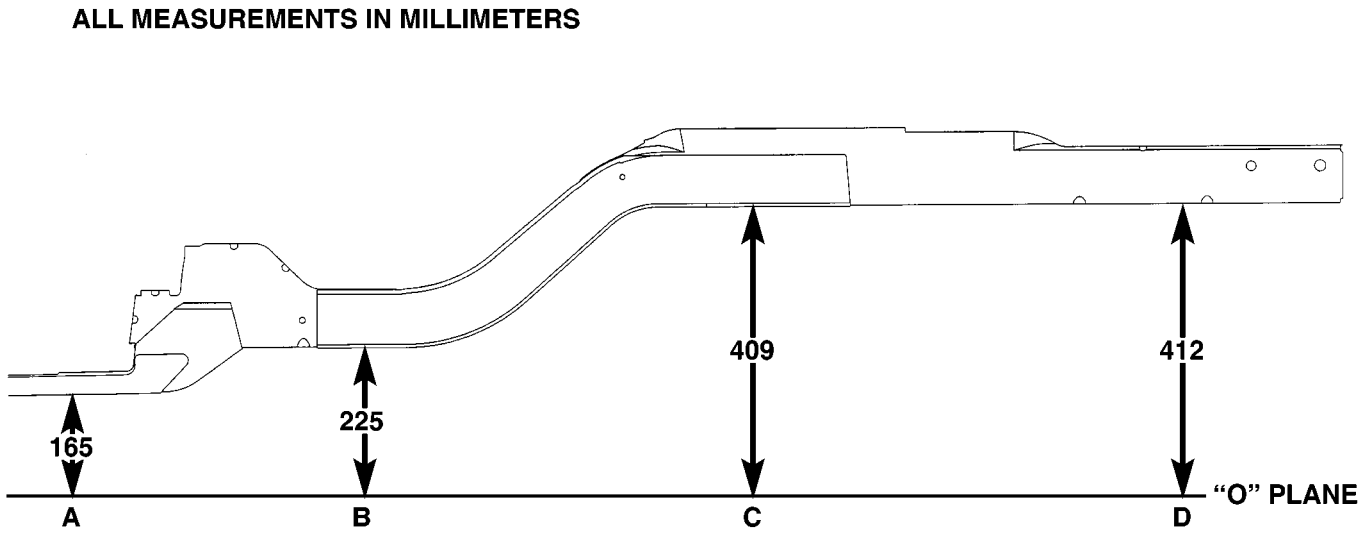

A. REAR MID PLP
B. CENTER OF TRACK BAR MOUNT
C. CENTER OF REAR CROSSMEMBER
D. REAR PLP

80c623dc

Fig. 11 REAR FRAME SECTION SIDE VIEW

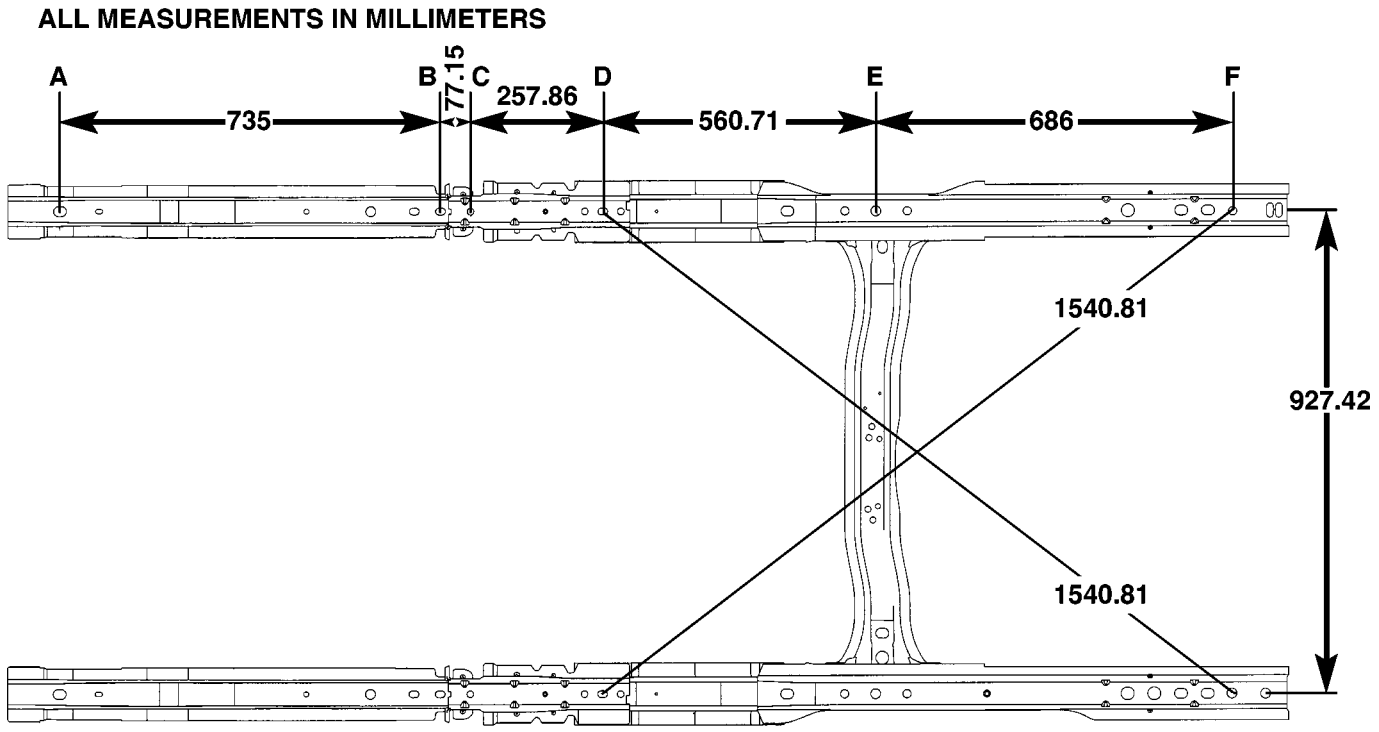

A. FRONT MID PLP
B. REAR MID PLP
C. REAR RAIL TO FLOOR LOCATOR
D. CENTER OF TRACK BAR MOUNT
E. CENTER OF REAR CROSSMEMBER
F. REAR PLP

80c623de

Fig. 12 REAR FRAME SECTION BOTTOM VIEW

FRONT SUSPENSION CROSSMEMBER

REMOVAL

(1) Hoist and support vehicle on safety stands. (Refer to LUBRICATION & MAINTENANCE/HOISTING - SERVICE PROCEDURE).

(2) Place a suitable lifting device under front suspension crossmember.

(3) Remove bolts attaching suspension strut to the lower control arm. (Refer to 2 - SUSPENSION/FRONT/STRUT - REMOVAL).

(4) Disengage lower ball joints from lower control arms. (Refer to 2 - SUSPENSION/FRONT/LOWER CONTROL ARM - REMOVAL).

(5) Remove 3 bolts attaching rear engine mount to crossmember (Fig. 13). **If equipped, manual transmission bracket will come down when these bolts are removed. It may be necessary to loosen damper mounting bolt at engine structural collar to allow bracket and damper to swing down sufficiently (Fig. 13).**

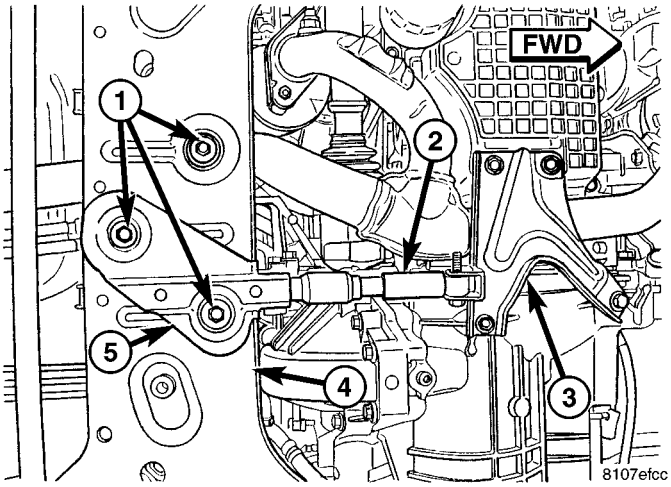

Fig. 13 Damper Mounting

1 - ENGINE MOUNT BOLTS
2 - DAMPER
3 - STRUCTURAL COLLAR
4 - FRONT SUSPENSION CROSSMEMBER
5 - TRANSMISSION BRACKET

(6) Remove bolts attaching front of suspension crossmember to frame rails under upper control arms.

(7) Loosen bolts attaching rear of suspension crossmember to frame rail torque boxes.

(8) Allow the front of the suspension crossmember to swing away from the frame rails.

(9) Remove bolts attaching steering gear to top of suspension crossmember (Fig. 14).

CAUTION: Do not allow steering gear to hang by the pressure or return hoses, damage to hoses can result.

(10) Using mechanics wire, tie steering gear to structure above.

(11) Raise crossmember back into position.

(12) Remove bolts attaching rear of crossmember to frame rail torque boxes.

(13) Lower front suspension crossmember away from bottom of vehicle.

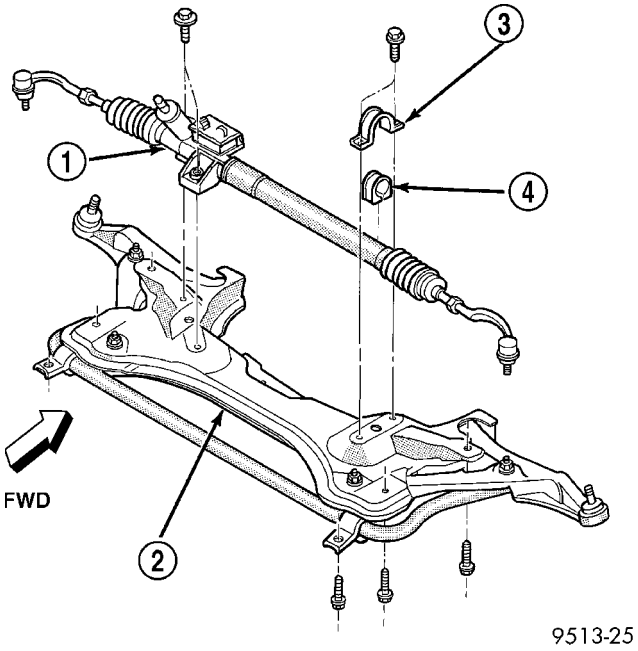

Fig. 14 Front Suspension Crossmember

1 - STEERING GEAR
2 - FRONT SUSPENSION CROSSMEMBER
3 - CLAMP
4 - ISOLATOR

INSTALLATION

(1) Raise front suspension crossmember into position on vehicle.

(2) Loosely install bolts attaching rear of crossmember to frame rail torque boxes.

(3) Lower crossmember and install bolts attaching steering gear to top of suspension crossmember.

(4) Raise crossmember into position.

(5) Tighten bolts holding rear of suspension crossmember to frame rail torque boxes.

(6) Install bolts attaching front of suspension crossmember to frame rails under upper control arm.

(7) Engage lower ball joint to lower control arms. (Refer to 2 - SUSPENSION/FRONT/LOWER CONTROL ARM - INSTALLATION).

(8) Install 3 bolts attaching rear engine mount to crossmember (Fig. 13). **If equipped, make sure manual transmission bracket is positioned in**

FRONT SUSPENSION CROSSMEMBER (Continued)

place before installing bolts (Fig. 13). Tighten bolts to 65 N·m (48 ft. lbs.) torque.

(9) Install bolts attaching suspension strut to lower control arm. (Refer to 2 - SUSPENSION/ FRONT/STRUT - INSTALLATION).

(10) Lower vehicle.

(11) After assembly is complete, check front end alignment and adjust as necessary.

REAR SUSPENSION CROSSMEMBER

DESCRIPTION

This vehicle is equipped with a bolt in type rear suspension crossmember. The crossmember on this vehicle is the same for all of the optional suspensions that are available on the vehicle.

REMOVAL

(1) Raise vehicle on jack stands or centered on a frame contact type hoist. (Refer to LUBRICATION & MAINTENANCE/HOISTING - SERVICE PROCEDURE).

(2) Remove both rear wheel and tire assemblies from the vehicle.

(3) Remove the shock absorber clevis bracket to rear knuckle attaching bolt and nut on both sides of the vehicle (Fig. 15).

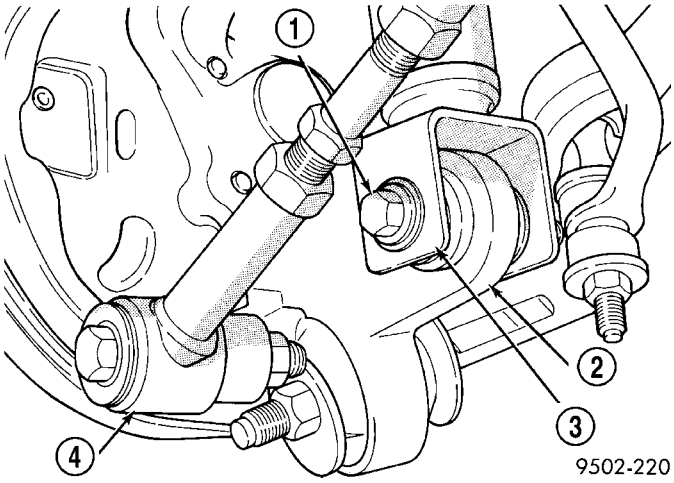

Fig. 15 Shock Absorber To Knuckle Attaching

1 - ATTACHING BOLT
2 - REAR KNUCKLE
3 - SHOCK ABSORBER CLEVIS BRACKET
4 - LATERAL LINK

(4) Remove muffler support bracket from rear frame rail (Fig. 16).

(5) Remove the rear exhaust pipe hanger from the rear suspension crossmember (Fig. 17). Let exhaust system drop down as far as possible.

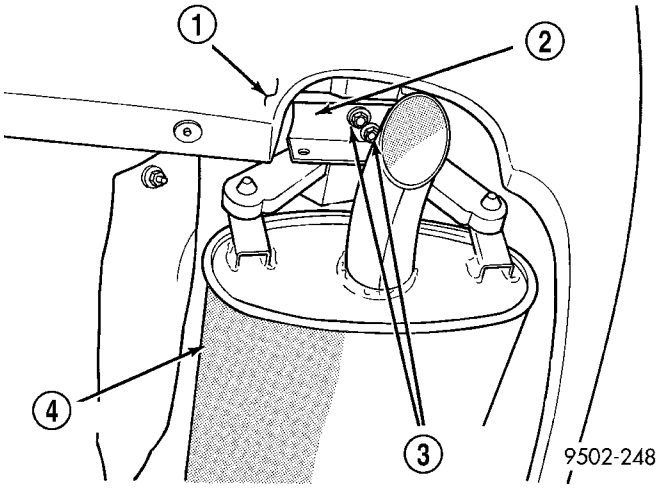

Fig. 16 Muffler Support Bracket

1 - REAR FASCIA
2 - MUFFLER SUPPORT BRACKET
3 - ATTACHING BOLTS
4 - MUFFLER

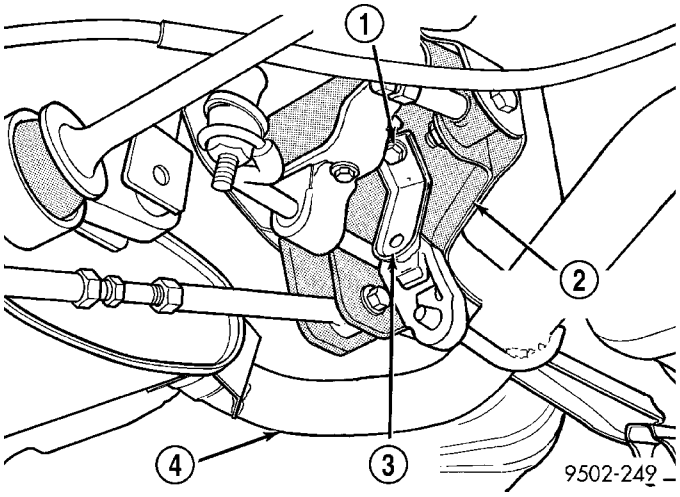

Fig. 17 Exhaust Pipe Hanger At Rear Suspension Crossmember

1 - BOLT
2 - REAR SUSPENSION CROSSMEMBER
3 - HANGER BRACKET
4 - EXHAUST PIPE

(6) Position a transmission jack and wooden block under the center of the rear suspension crossmember to support and lower crossmember during removal (Fig. 18).

(7) If vehicle is equipped with antilock brakes, remove routing clips for wheel speed sensor cable from brackets on upper control arm (Fig. 19).

(8) Remove the nuts and bolts on each side of vehicle attaching the 4 lateral links to the knuckles.

(9) Disconnect the clips attaching line bundle to crossmember (Fig. 20).

REAR SUSPENSION CROSSMEMBER (Continued)

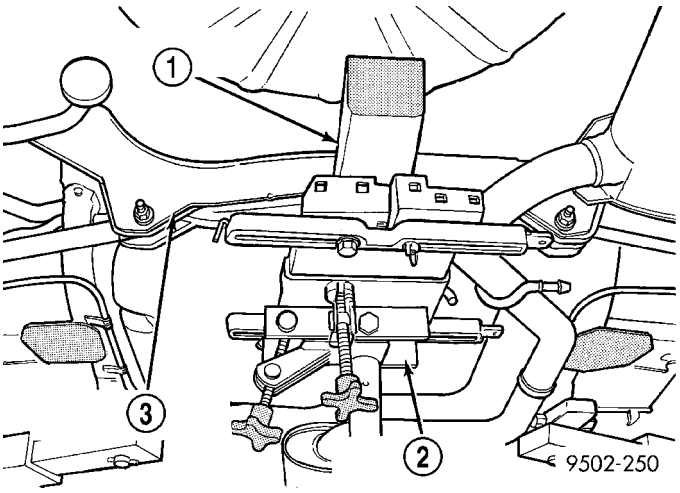

Fig. 18 Lowering And Supporting Rear Suspension Crossmember

1 - WOODEN BLOCK
2 - TRANSMISSION JACK
3 - REAR SUSPENSION CROSSMEMBER

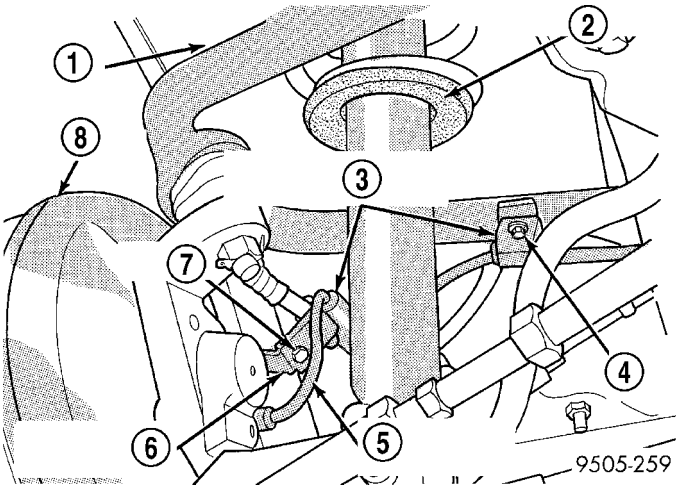

Fig. 19 Speed Sensor Cable Attachment To Control Arm

1 - UPPER CONTROL ARM
2 - SHOCK ABSORBER
3 - SPEED SENSOR CABLE ROUTING CLIPS
4 - BOLT
5 - SPEED SENSOR CABLE
6 - BRAKE FLEX HOSE BRACKET
7 - BOLT
8 - BRAKE DRUM

(10) Remove the 4 bolts attaching the rear suspension crossmember to rear frame rails (Fig. 21).

(11) Lower the rear suspension crossmember enough to access the upper control arm pivot bar to crossmember attaching bolts (Fig. 22). Remove the 4 bolts attaching the upper control arms to the suspension crossmember. Remove the control arms from the crossmember.

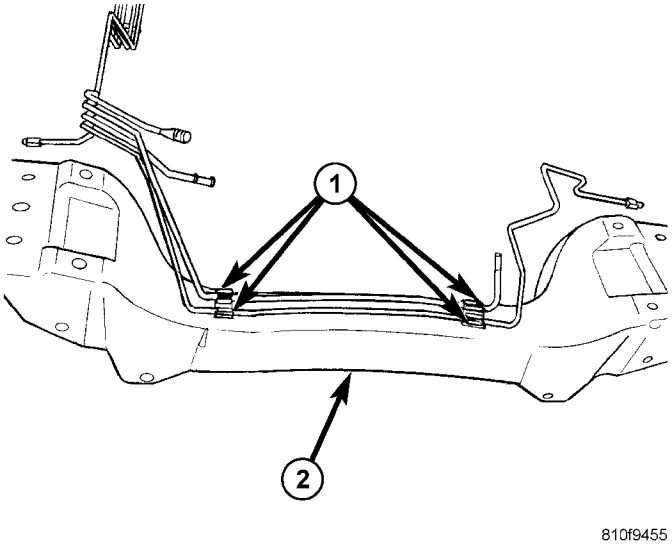

Fig. 20 REAR CROSSMEMBER

1 - ATTACHING LINE BUNDLE CLIPS
2 - REAR CROSSMEMBER

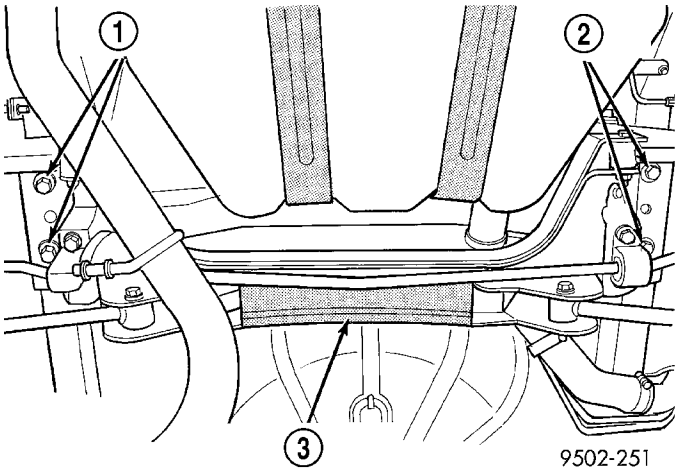

Fig. 21 Suspension Crossmember Attachment To Frame Rails

1 - ATTACHING BOLTS
2 - ATTACHING BOLTS
3 - REAR SUSPENSION CROSSMEMBER

(12) Lower the rear suspension crossmember, lateral arms and stabilizer bar as far as possible using the transmission jack. Then with the aid of a helper remove rear suspension crossmember from the vehicle.

REAR SUSPENSION CROSSMEMBER (Continued)

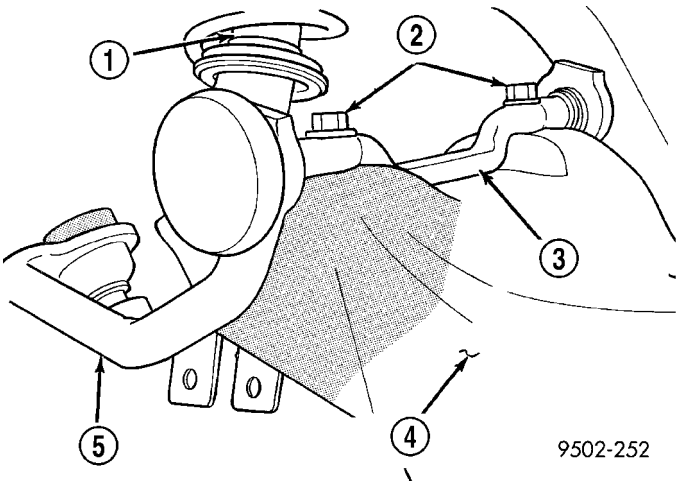

Fig. 22 Upper Control Arm Attachment To Crossmember

1 - SHOCK ABSORBER
2 - ATTACHING BOLTS
3 - UPPER CONTROL ARM PIVOT BAR
4 - REAR SUSPENSION CROSSMEMBER
5 - UPPER CONTROL ARM

NOTE: When installing the lateral links on the crossmember, the lateral link attaching bolts must be installed as listed below. Install the forward lateral link to crossmember bolts so that the head of the bolt will be toward the front of the vehicle when the crossmember is installed. Install the rear lateral link to crossmember bolts so that the threaded end of the bolt will be facing toward the front of the vehicle when the crossmember is installed.

(13) Transfer the lateral links, stabilizer bar mounting brackets and the stabilizer bar and bushings to the replacement crossmember before installing the replacement crossmember in the vehicle. Tighten the stabilizer bar mounting bracket to rear crossmember mounting bolts to 27 N·m (20 ft. lbs.) torque. Tighten the 4 lateral link to crossmember attaching bolts to 95 N·m (80 ft. lbs.) torque.

INSTALLATION

(1) Install the rear suspension crossmember, lateral arms and rear stabilizer bar back into the vehicle as an assembly.

(2) With the aid of a helper position rear suspension crossmember back in vehicle and support it using the transmission jack.

(3) Align the upper control arm pivot bars with the mounting holes in the rear suspension crossmember. Install and tighten the 4 pivot bar to crossmember attaching bolts (Fig. 22) to 107 N·m (80 ft. lbs.) torque.

CAUTION: While raising crossmember use care not to pinch any lines

(4) Using transmission jack, raise rear suspension crossmember up to the rear frame rails and loosely install the 4 attaching bolts.

(5) Connect line bundle clips to crossmember (Fig. 20).

(6) Position a drift of the appropriate size into the positioning hole in each side of rear suspension crossmember and locating holes in the frame rail of the body. (Fig. 23). This is required to properly position rear suspension crossmember side-to-side and front-to-rear in the body of the vehicle. Then tighten the 4 crossmember to frame rail attaching bolts to 95 N·m (70 ft. lbs.) torque. Remove drifts from rear suspension crossmember.

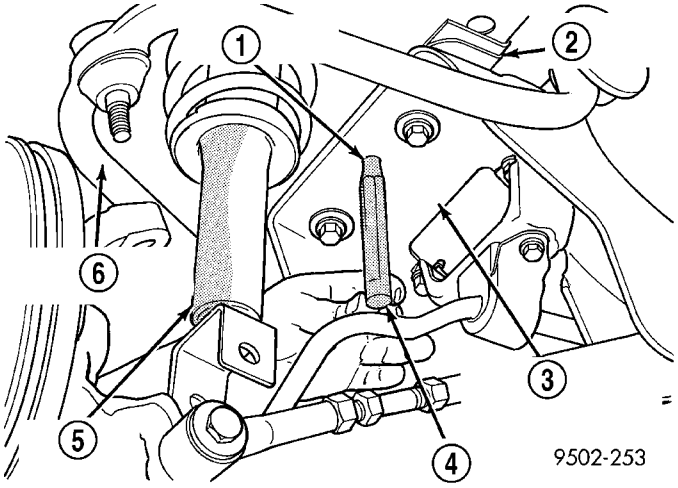

Fig. 23 Locating Rear Suspension Crossmember In Vehicle

1 - POSITIONING HOLE
2 - FRAME RAIL
3 - REAR SUSPENSION CROSSMEMBER
4 - DRIFT
5 - SHOCK ABSORBER
6 - UPPER CONTROL ARM

(7) Align lateral links with knuckles and install the lateral arm to knuckle attaching bolts. Tighten the 4 lateral arm to spindle attaching bolts to 95 N·m (70 ft. lbs.) torque.

(8) Remove transmission jack supporting rear suspension crossmember.

(9) Install muffler support bracket on rear frame rail (Fig. 16). Install rear exhaust pipe hanger on rear suspension crossmember (Fig. 17).

(10) If vehicle is equipped with antilock brakes, install the wheel speed sensor cable routing clip on upper control arm mounting bracket (Fig. 19). Install and securely tighten attaching bolt.

(11) Install wheel and tire assembly on vehicle. Tighten the wheel mounting stud nuts in proper sequence until all nuts are torqued to half specification. Then repeat the tightening sequence to the full specified 129 N·m (95 ft. lbs.) torque.

REAR SUSPENSION CROSSMEMBER (Continued)

(12) Lower vehicle to the ground.
(13) Check and reset if required, rear wheel alignment to meet the preferred specifications.

FRONT TOW HOOK

REMOVAL

(1) Raise vehicle and support on safety stands.
(2) Remove bolts (Fig. 24).
(3) Remove tow hook from vehicle.

INSTALLATION

(1) Place tow in position.
(2) Install bolts (Fig. 24). Tighten to 55 to 115 N·m (55 to 85 ft. lbs.) torque.
(3) Remove safety stands and lower vehicle.

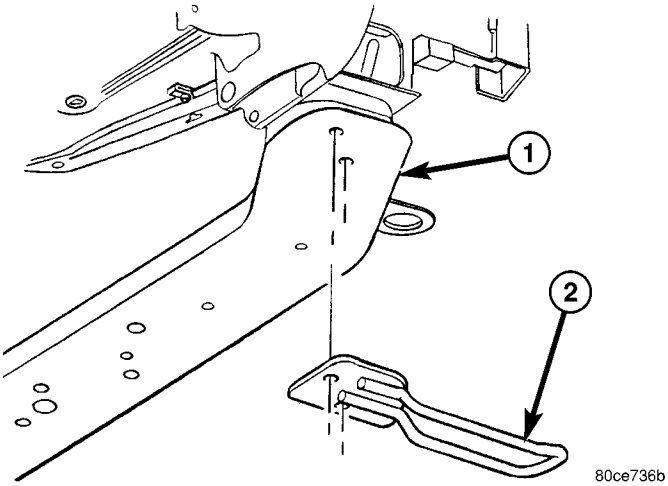

Fig. 24 FRONT TOW HOOK

1 - FRONT SUB DECKING PALLET
2 - TOW HOOK (RECOVERY BRACKET)

FUEL SYSTEM

TABLE OF CONTENTS

page

FUEL DELIVERY 1

FUEL INJECTION 15

FUEL DELIVERY

TABLE OF CONTENTS

page

FUEL DELIVERY
DESCRIPTION
DESCRIPTION 2
DESCRIPTION - FFV REPLACEMENT PARTS 2
OPERATION 2
DIAGNOSIS AND TESTING - FUEL DELIVERY SYSTEM 2
STANDARD PROCEDURE
STANDARD PROCEDURE - FUEL SYSTEM PRESSURE RELEASE PROCEDURE 2
STANDARD PROCEDURE - FUEL PRESSURE GAUGE 2
SPECIFICATIONS
TORQUE 3
FUEL SYSTEM PRESSURE 3
SPECIAL TOOLS
FUEL 4
FLOW MANAGEMENT VALVE
DESCRIPTION 4
OPERATION 4
FUEL LEVEL SENDING UNIT / SENSOR
DESCRIPTION 4
OPERATION 4
REMOVAL 5
INSTALLATION 5
FUEL PRESSURE REGULATOR
OPERATION 6
REMOVAL 6
INSTALLATION 6

page

FUEL PUMP
DESCRIPTION 6
OPERATION 7
FUEL PUMP MODULE
DESCRIPTION 7
OPERATION 7
REMOVAL 7
INSTALLATION 7
FUEL RAIL
REMOVAL
REMOVAL - 4 CYLINDER 8
REMOVAL - 2.7L 8
INSTALLATION
INSTALLATION - 4 CYLINDER 9
INSTALLATION - 2.7L 9
FUEL TANK
DESCRIPTION 10
OPERATION 10
REMOVAL 11
INSTALLATION 11
FUEL TANK FILLER TUBE
REMOVAL 11
INSTALLATION 12
FUEL TANK VENT TUBE
REMOVAL 12
INSTALLATION 12
QUICK CONNECT FITTING
STANDARD PROCEDURE - QUICK-CONNECT FITTINGS 12

FUEL DELIVERY

DESCRIPTION

DESCRIPTION

The front wheel drive car uses a plastic fuel tank located rear center of the vehicle.

The Fuel Delivery System consists of: the following items:

- Electric fuel pump module
- Fuel filter
- Tubes/lines/hoses
- Fuel injectors

The in-tank fuel pump module contains the fuel pump. The pump is serviced as part of the fuel pump module. Refer to Fuel Pump Module.

The fuel filter is only replaceable as part of the fuel pump module.

DESCRIPTION - FFV REPLACEMENT PARTS

Many components in a Flexible Fuel Vehicle (FFV) are designed to be compatible with ethanol. Always be sure that the vehicle is serviced with correct ethanol compatible parts.

CAUTION: Replacing fuel system components with non-ethanol compatible components can damage your vehicle and may void the warranty.

OPERATION

The fuel system provides fuel pressure by an in-tank pump module. The PCM controls the operation of the fuel system by providing battery voltage to the fuel pump through the fuel pump relay. The PCM requires only three inputs and a good ground to operate the fuel pump relay. The three inputs are:

- Ignition voltage
- Crankshaft Position (CKP) sensor
- Camshaft Position (CMP) sensor

DIAGNOSIS AND TESTING - FUEL DELIVERY SYSTEM

(Refer to Appropriate Diagnostic Information)

STANDARD PROCEDURE

STANDARD PROCEDURE - FUEL SYSTEM PRESSURE RELEASE PROCEDURE

(1) Remove Fuel Pump relay from Power Distribution Center (PDC). For location of relay, refer to label on underside of PDC cover.

(2) Start and run engine until it stalls.

(3) Attempt restarting engine until it will no longer run.

(4) Turn ignition key to OFF position.

(5) Return fuel pump relay to PDC.

(6) One or more Diagnostic Trouble Codes (DTC's) may have been stored in PCM memory due to fuel pump relay removal. The DRB III® scan tool must be used to erase a DTC.

STANDARD PROCEDURE - FUEL PRESSURE GAUGE

This gauge package (special tool #8974) (Fig. 1)is designed to check the injectors or fuel pump for leak down conditions and fuel system pressures. Refer to the Powertrain Diagnostic Manual for more information on the operation of this tool.

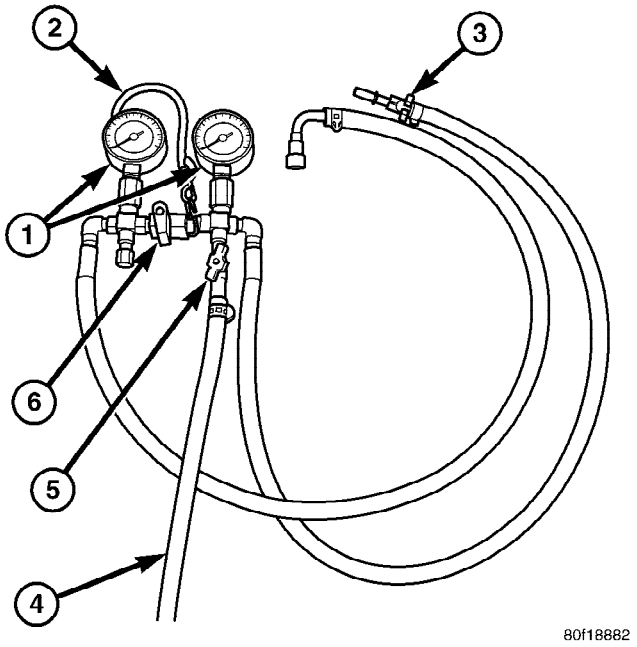

Fig. 1 FUEL SYSTEM PRESSURE TESTER #8978

1 - GAUGES
2 - HANGER
3 - RELEASE TOOL
4 - DRAIN HOSE
5 - DRAIN HOSE VALVE
6 - SHUT-OFF VALVE

(1) Preform the fuel pressure release procedure, refer to the Fuel Pressure release procedure in this section.

(2) Find a fuel line quick connect fitting that is accessible and install special tool #8974.

(3) Refer to the Powertrain Diagnostic Manual for the proper operation of this gauge package.

(4) Preform the fuel pressure release procedure, refer to the Fuel Pressure release procedure in this section.

FUEL DELIVERY (Continued)

(5) Remove gauge from fuel system and reconnect fuel lines.

(6) Use the DRBIII® to pressurize the fuel system to check for leaks

SPECIFICATIONS

TORQUE

DESCRIPTION	N·m	Ft. Lbs.	In. Lbs.
Fuel Tank Straps	54	39.8	
Filler Tube Ground Strap	7.5		66
Filler Tube Screws	1.9		16
Fuel Filler Tube Clamp	3.6		31.8
Fuel Rail to Intake Manifold 4-Cylinder	11.9		105
Fuel Rail to Cylinder Head 4-Cylinder	22		195
Fuel Rail to Intake Manifold 2.7L	11.9		105

FUEL SYSTEM PRESSURE

400 kpa ±34 kpa (58 psi ± 5 psi)

FUEL DELIVERY (Continued)

SPECIAL TOOLS

FUEL

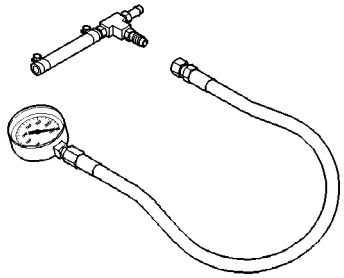

Pressure Gauge Assembly C–4799–B

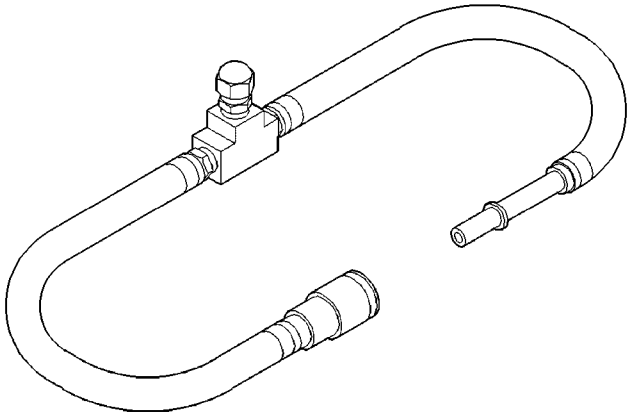

Fuel Pressure Test Adapter 6539

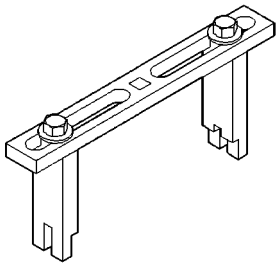

Spanner Wrench 6856

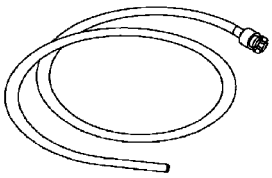

Fuel Line Adapter 1/4

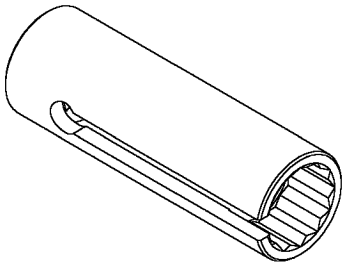

O2S (Oxygen Sensor) Remover/Installer—C-4907

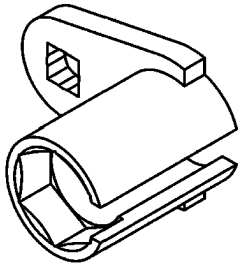

O2S (Oxygen Sensor) Remover/Installer - 8439

FLOW MANAGEMENT VALVE

DESCRIPTION

It is a plastic valve inline between the fuel tank and the EVAP canister.

OPERATION

The flow management valve meters the flow of fuel vapors to and from the EVAP canister during vehicle run, and refueling. Pressure from the tank during refueling opens the main port valve and allows vapors to the EVAP canister. During vehicle run the vapors are metered through an orifice to the EVAP canister. It also is a liquid separator to keep fuel out of the EVAP canister.

FUEL LEVEL SENDING UNIT / SENSOR

DESCRIPTION

The fuel gauge level sending unit is attached to the side of fuel pump module. The level sensor is a variable resistor.

OPERATION

Its resistance changes with the amount of fuel in the tank. The float arm attached to the sensor moves as the fuel level changes.

The fuel level input is used as an input for OBD II. If the fuel level is below 15% or above 85% of total tank capacity several monitors are disabled. There are diagnostics for the level circuit open and shorted.

FUEL LEVEL SENDING UNIT / SENSOR (Continued)

REMOVAL

Remove fuel pump module. Refer to Fuel Pump Module in this section.

(1) Depress retaining tab and remove the fuel pump/level sensor connector from the bottom of the fuel pump module electrical connector (Fig. 2) and (Fig. 3).

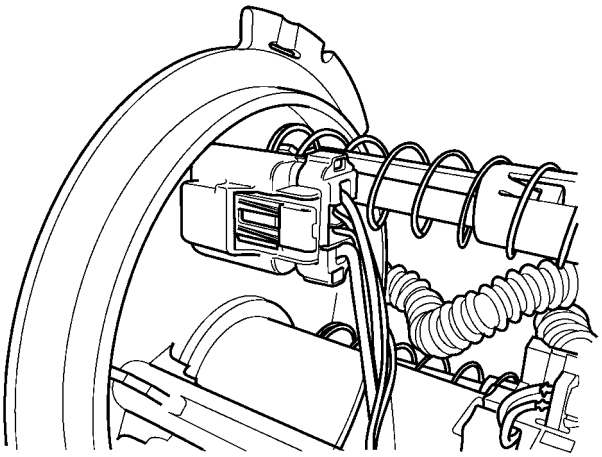

Fig. 2 ELECTRICAL CONNECTOR

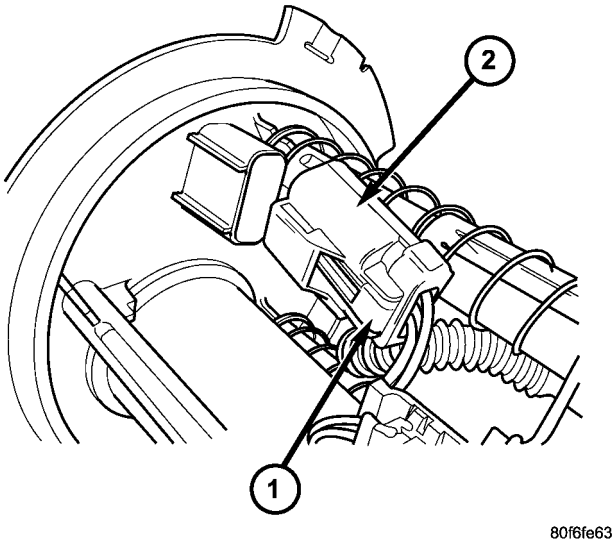

Fig. 3 Fuel Pump/Level Sensor Electrical Connector

1 - RETAINING TAB
2 - ELECTRICAL CONNECTOR

(2) Pull off locking wedge (Fig. 4).

(3) Using a small screwdriver lift locking finger away from terminal and push level sensor and ground terminals out of connector (Fig. 5).

(4) Push level sensor signal and ground terminals out of the connector (Fig. 5).

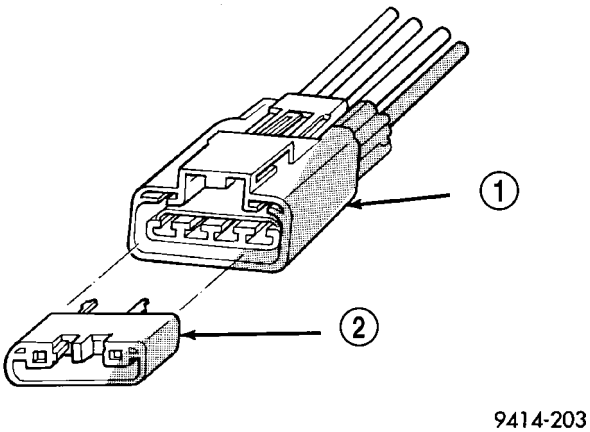

Fig. 4 Wire Terminal Locking Wedge

1 - ELECTRICAL CONNECTOR
2 - LOCKING WEDGE

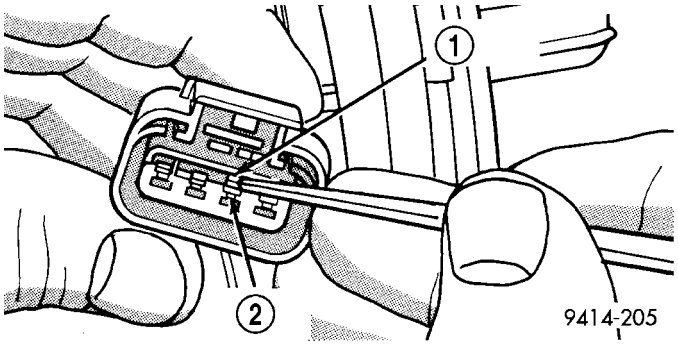

Fig. 5 Removing Wires From Connector

1 - LOCKING FINGER
2 - WIRE TERMINAL

(5) Use screwdriver to move locking tab on level sensor and move level sensor down channel to remove (Fig. 6) and (Fig. 7).

(6) Slide level sensor out of installation channel in module.

INSTALLATION

(1) Insert level sensor wires into bottom of opening in module.

(2) Wrap wires into groove in back of level sensor.

(3) While feeding wires into guide grooves, slide level sensor up into channel until it snaps into place. Ensure tab at bottom of sensor locks in place.

(4) Install level sensor wires in connector. Push the wires up through the connector and then pull them down until they lock in place. Ensure signal and ground wires are installed in the correct position.

(5) Install locking wedge on connector.

(6) Push connector up into bottom of fuel pump module electrical connector.

FUEL LEVEL SENDING UNIT / SENSOR (Continued)

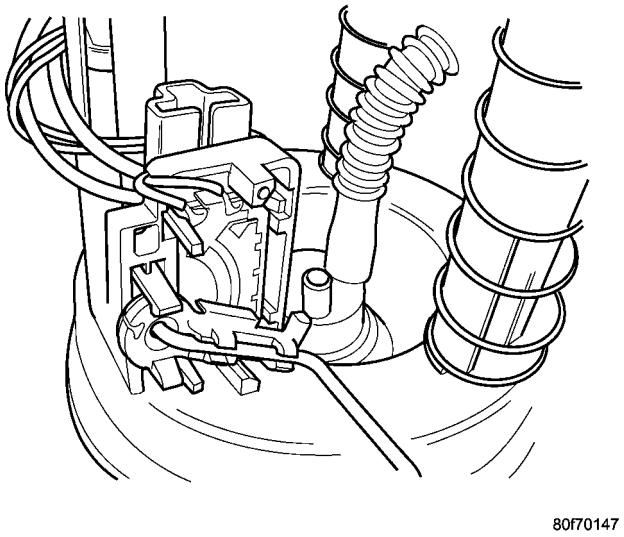

Fig. 6 LEVEL SENSOR

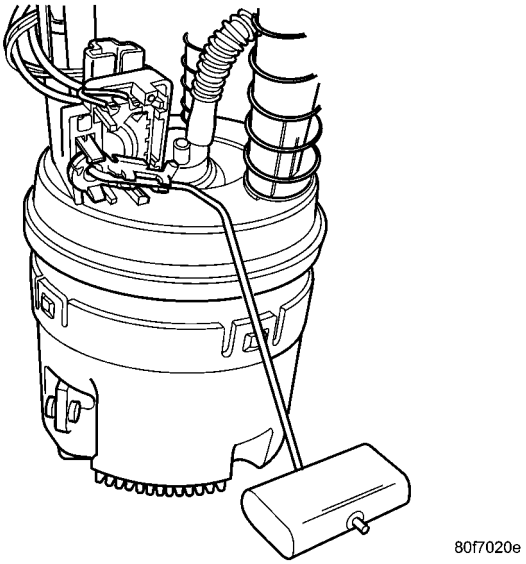

Fig. 7 LEVEL SENSOR ARM

(7) Install fuel pump module. Refer to Fuel Pump Module in this section.

FUEL PRESSURE REGULATOR

OPERATION

Fuel Pressure Regulator Operation: The pressure regulator (Fig. 8) is a mechanical device that is calibrated to maintain fuel system operating pressure of approximately 400 kPa ±34 kPa (58 psi ±5 psi.) at the fuel injectors.

The fuel pump module contains a check valve to maintain some fuel pressure when the engine is not operating. This will help to start the engine.

If fuel pressure at the pressure regulator exceeds approximately 58 psi, an internal diaphragm closes and excess fuel pressure is routed back into the tank through the pressure regulator. A separate fuel return line is not used with any gas powered engine.

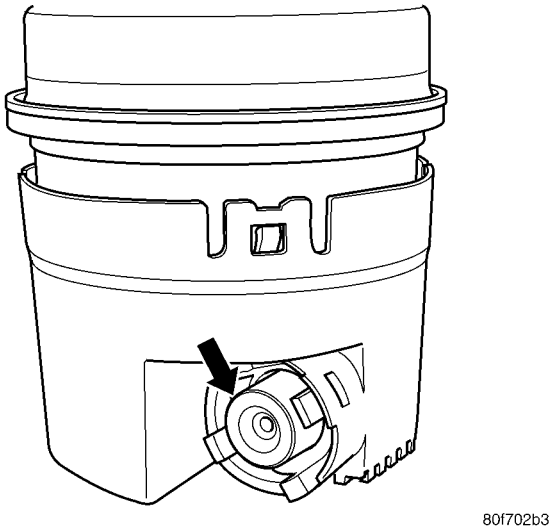

Fig. 8 PRESSURE REGULATOR

REMOVAL

The fuel pressure regulator is part of the fuel pump module. Remove the fuel pump module from the fuel tank to access the fuel pressure regulator. Refer to the Fuel Pump Module removal in this section.

(1) Spread tangs on pressure regulator retainer.
(2) Pry fuel pressure regulator out of housing.
(3) Ensure both upper and lower O-rings were removed with regulator.

INSTALLATION

The fuel pressure regulator is part of the fuel pump module. Remove the fuel pump module from the fuel tank to access the fuel pressure regulator. Refer to the Fuel Pump Module removal in this section.

(1) Lightly lubricate the O-rings with clean engine oil and place them into opening in pump module.
(2) Push regulator into opening in pump module.
(3) Tabs hold regulator in housing.

FUEL PUMP

DESCRIPTION

The electric fuel pump is located in and is part of the fuel pump module. It is a positive displacement, gerotor type, immersible pump with a permanent

FUEL PUMP (Continued)

magnet electric motor. The fuel pump module is suspended in fuel in the fuel tank.

OPERATION

The pump draws fuel through a strainer and pushes it through the motor to the outlet. The pump contains a check valve. The valve, in the pump outlet, maintains pump pressure during engine off conditions, for a short while. It is normal for fuel pressure to drop to zero after cooldown. The fuel pump relay provides voltage to the fuel pump. The fuel pump has a maximum deadheaded pressure output of approximately 880 kPa (130 psi). The regulator adjusts fuel system pressure to approximately 400 kpa ±34 kpa (58 psi ± 5 psi).

NOTE: Checkvalve maintains volume of fuel in the rail and lines, not pressure.

FUEL PUMP MODULE

DESCRIPTION

The fuel pump module contains the fuel pump, fuel reservoir, level sensor, inlet strainer, fuel pressure regulator, and fuel filter (Fig. 9).

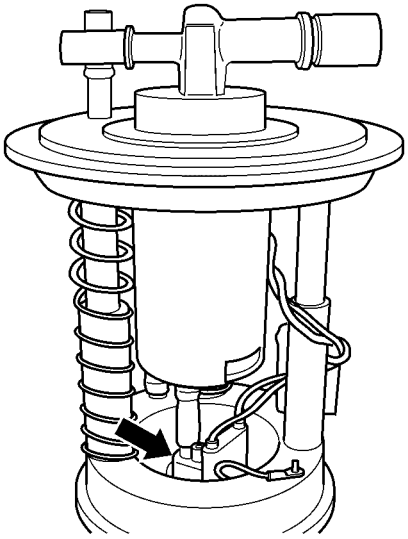

Fig. 9 FUEL PUMP LOCATION

OPERATION

The Chrysler fuel pump module is an in-tank unit with an integral fuel level sensor and pressure regulator. The pump is driven by a 12 volt DC motor any time the fuel pump relay is energized. Serviceable components on the module include:

- Inlet strainer
- Fuel level sensor
- Pressure regulator

The pump draws fuel through a strainer and pushes it through the motor to the outlet. The pump contains two check valves. One valve relieves internal fuel pump pressure and regulates maximum pump output. The second valve, in the pump outlet, maintains pump pressure during engine off conditions.

The fuel system use a positive displacement, gerotor, with a permanent magnet electric motor. This fuel system does not contain the traditional fuel return lines. The regulator contains a calibrated spring which forces a diaphragm against the fuel filter return port. When pressure exceeds the calibrated amount, the diaphragm retracts, allowing excess pressure and fuel to vent into the tank.

The maximum deadhead pressure is approximately 880 kPa (130 psi). The regulator adjusts fuel system pressure to approximately 400 ±34 kPa (58 ± 5 psi).

The inlet strainer, level sensor and fuel pressure regulator are the only serviceable items.

REMOVAL

(1) Release fuel pressure, Refer to Fuel System Pressure Release Procedure in the Fuel Delivery section.

(2) Remove Fuel Tank refer to the Fuel Tank Removal/Installation in this group.

WARNING: THE FUEL RESERVOIR OF THE FUEL PUMP MODULE DOES NOT EMPTY OUT WHEN THE TANK IS DRAINED. THE FUEL IN THE RESERVOIR WILL SPILL OUT WHEN THE MODULE IS REMOVED.

(3) Disconnect fuel line from fuel pump module by depressing quick connect retainers with thumb and fore finger.

(4) Slide fuel pump module electrical connector lock to unlock.

(5) Disconnect the electrical connection from the fuel pump module, by pushing down on connector retainer and pulling connector off of module.

(6) Mark fuel pump location.

(7) Use a brass punch and hammer to remove fuel pump module lock ring (Fig. 10).

(8) Remove fuel pump and O-ring seal from tank. Discard old seal.

INSTALLATION

(1) Wipe seal area of tank clean and place a new seal in position in the tank opening.

(2) Position fuel pump in the tank.

(3) Position the lockring over the fuel pump module.

(4) Tighten the lockring using a brass punch and hammer.

(5) Connect the electrical connector.

FUEL PUMP MODULE (Continued)

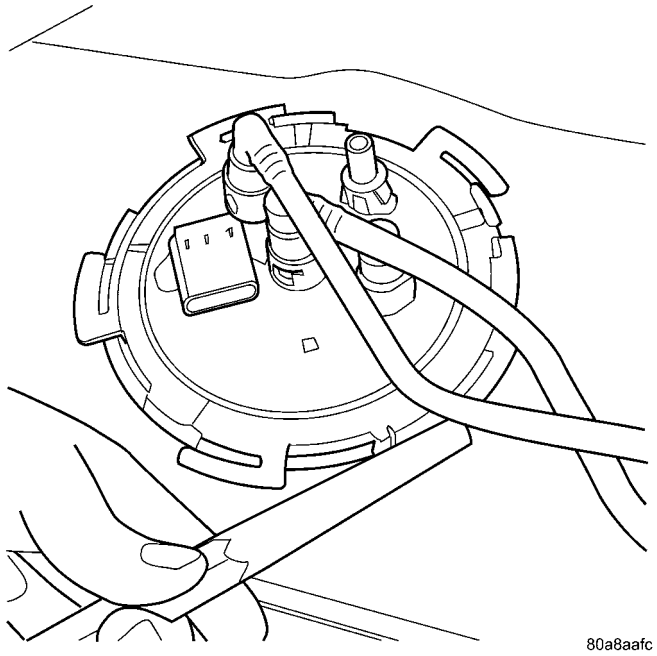

Fig. 10 FUEL TANK LOCKNUT - TYPICAL

(6) Connect the fuel line to the fuel pump.

(7) Install the fuel tank, refer to fuel tank installation (Refer to 14 - FUEL SYSTEM/FUEL DELIVERY/FUEL TANK - INSTALLATION).

(8) Lower vehicle.

(9) Connect the battery cable.

(10) Fill fuel tank. Use the DRB III® scan tool to pressurize the fuel system. Check for leaks.

FUEL RAIL

REMOVAL

REMOVAL - 4 CYLINDER

(1) Perform fuel system pressure release procedure **before servicing or starting repairs.** Refer to Fuel System Pressure Release Procedure in this section.

(2) Disconnect negative cable from battery.

(3) Remove wiring harness from fuel rail support bracket (Fig. 11).

(4) Remove fuel rail support bracket.

(5) Disconnect the wiring connectors for fuel injectors harness (Fig. 12).

(6) Remove wiring harness from fuel rail brackets.

(7) Disconnect the connectors from the fuel injectors.

(8) Remove throttle and speed control cables from the fuel rail (Fig. 13).

(9) Remove fuel hose quick connect fitting from the chassis tube. **Refer to Fuel Hoses, Clamps and Quick Connect Fittings in this Section.** Place a shop towel under the connections to absorb any fuel spilled from the fitting.

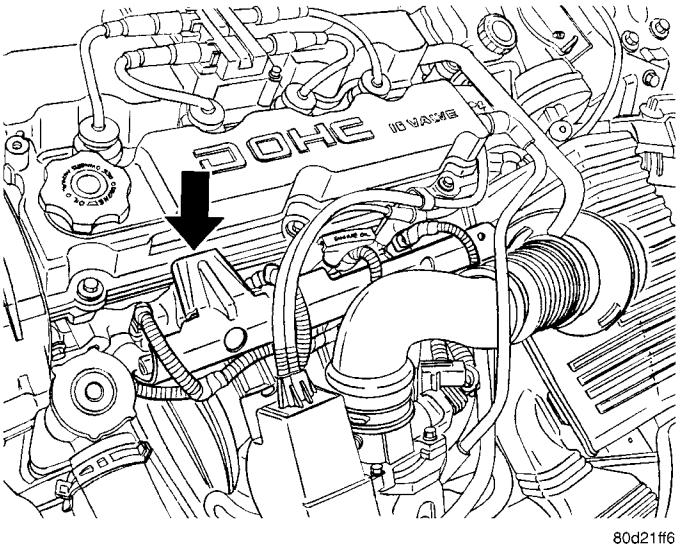

Fig. 11 FUEL RAIL AND BRACKET

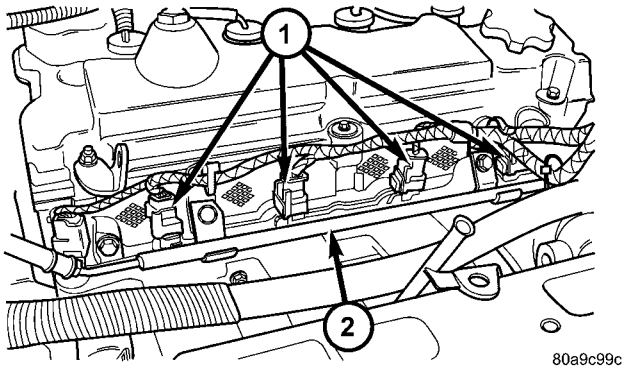

Fig. 12 FUEL RAIL AND INJECTORS

1 - Fuel Injectors
2 - Fuel Rail

WARNING: WRAP A SHOP TOWEL AROUND HOSES TO CATCH ANY GASOLINE SPILLAGE.

(10) Remove fuel rail attaching bolts.

(11) Remove fuel rail. Be careful not to damage the injector O-rings upon removal from their ports.

REMOVAL - 2.7L

WARNING: RELEASE FUEL SYSTEM PRESSURE BEFORE SERVICING FUEL RAIL. SERVICE VEHICLES IN WELL VENTILATED AREAS AND AVOID IGNITION SOURCES. NEVER SMOKE WHILE SERVICING THE VEHICLE.

FUEL RAIL (Continued)

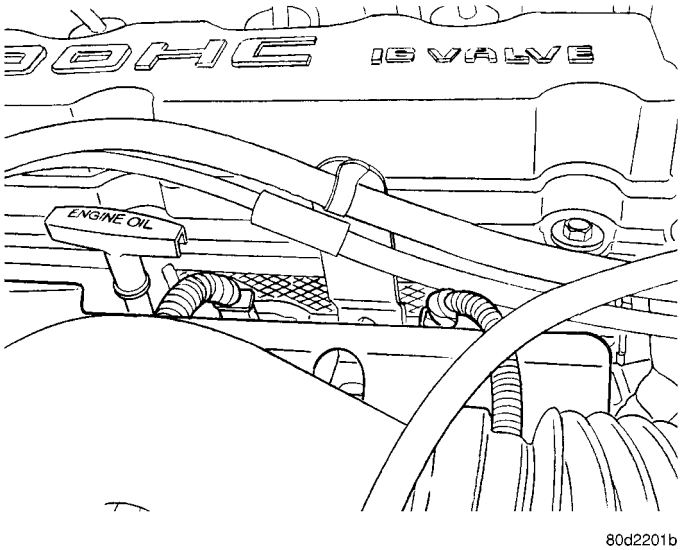

Fig. 13 THROTTLE AND SPEED CONTROL CABLE

(1) Release fuel system pressure. Refer to Fuel System Pressure Release Procedure in this section.

(2) Disconnect the negative battery cable.

(3) Remove intake manifold plenum. Refer to the Engine section for information.

(4) Remove intake manifold plenum mounting bolts. Lift Plenum up off of engine. Cover intake manifold to prevent foreign material from entering engine.

(5) Disconnect fuel supply tube quick connect fitting at the rear of the fuel rail. Refer to Quick Connect Fittings in the Fuel Delivery Section.

(6) If the injector connectors are not tagged with their cylinder number, tag them to identify the correct cylinder (Fig. 14).

(7) Remove electrical connectors from the fuel injectors.

(8) Remove mounting bolts on both sides of fuel rail.

(9) Lift fuel rail straight up off of cylinder head.

(10) Remove retaining clips from fuel injectors at fuel rail.

(11) Remove fuel injector from fuel rail.

INSTALLATION

INSTALLATION - 4 CYLINDER

(1) Ensure injector holes are clean. Replace O-rings if damaged.

(2) Lubricate injector O-rings with a drop of clean engine oil to ease installation.

(3) Put the tip of each injector into their ports. Push the assembly into place until the injectors are seated in the ports.

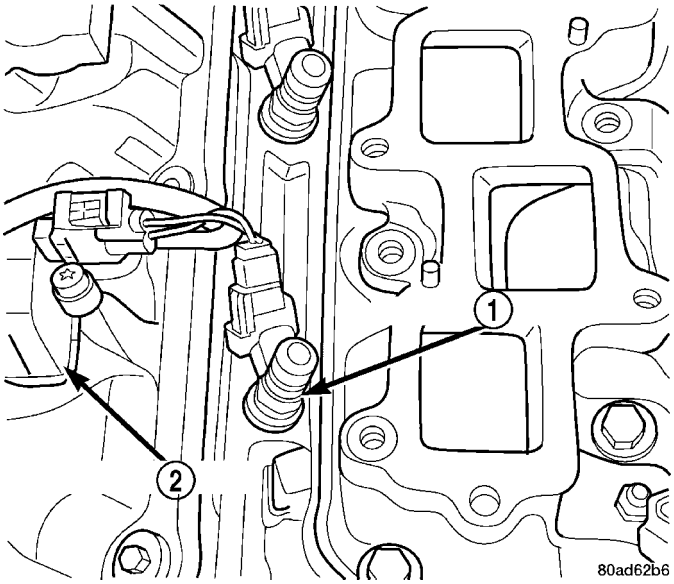

Fig. 14 Injector Electrical Connectors

1 - FUEL INJECTOR
2 - IGNITION COIL

(4) Install the 2 fuel rail mounting bolts to intake manifold. Tighten bolts to 11.9 N·m (105 in. lbs.) torque.

(5) Install the fuel rail mounting bolt to cylinder head. Tighten bolt to 22 N·m (195 in. lbs.) torque

(6) Connect the connectors to the fuel injectors.

(7) Install fuel rail support bracket and loosely install all bolts (Fig. 11).

(8) Tighten three fasteners to intake manifold to 28.3 N·m (250 in. lbs.) torque.

(9) Tighten two bolts to fuel rail to 8.5 N·m (75 in. lbs.) torque.

(10) Install wiring harness to brackets (Fig. 12).

(11) Connect the throttle and speed control cables to fuel rail bracket (Fig. 13).

(12) Connect negative battery cable.

(13) Use the DRBIII® scan tool to pressurize the fuel system. Check for leaks.

INSTALLATION - 2.7L

(1) Lightly lubricate the fuel injector O-rings with a couple drops of clean engine oil.

(2) Install retaining clips on fuel injectors.

(3) Push injectors into fuel injector rail until clips are in the correct position.

(4) Position fuel rail over cylinder heads, and push rail into place. Tighten fuel rail mounting bolts to 11.9 N·m (105 in. lbs.) torque.

(5) Connect the fuel supply tube quick connect fitting to the fuel rail. Refer to Quick Connect Fittings in the Fuel Delivery Section.

(6) Connect the electrical connectors to the fuel injectors.

FUEL RAIL (Continued)

(7) Install intake manifold plenum. Refer to the Engine section for information.
(8) Connect negative cable to battery.

FUEL TANK

DESCRIPTION

The fuel tank is constructed of a plastic material. Its main functions are for fuel storage and for placement of the fuel pump module. The tank is made from High density Polyethylene (HDPE) material.If equipped with ORVR (Onboard Refueling Vapor Recovery) it has been added to the fuel tank to control refueling vapor emissions.

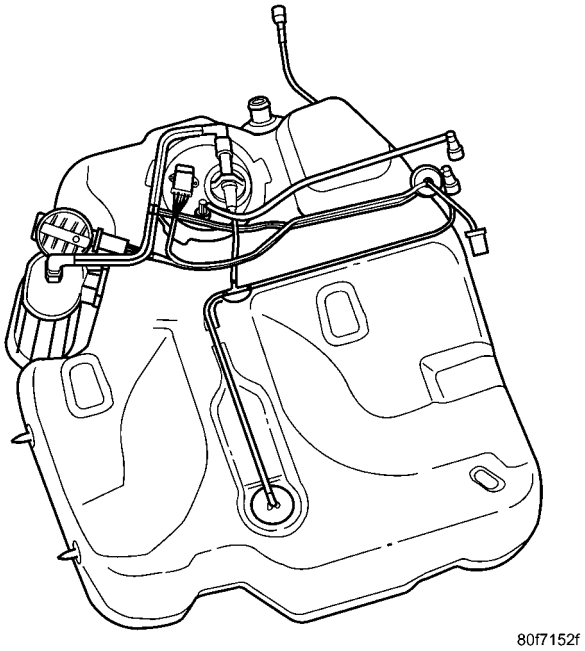

NVLD FUEL TANK

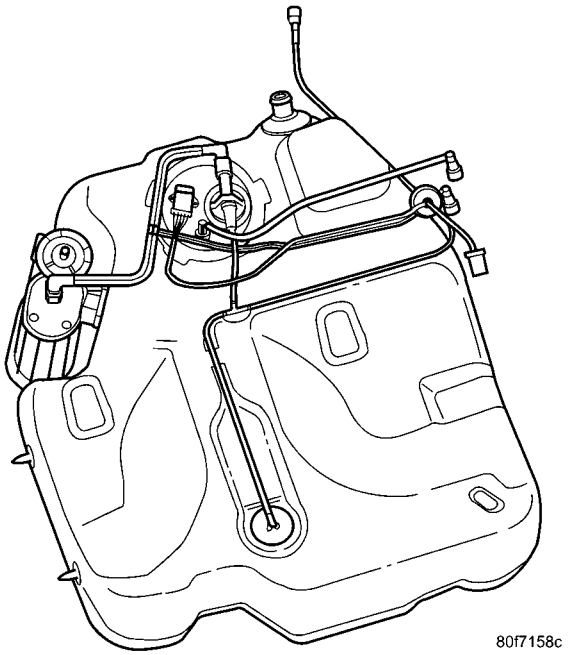

NON US FUEL TANK

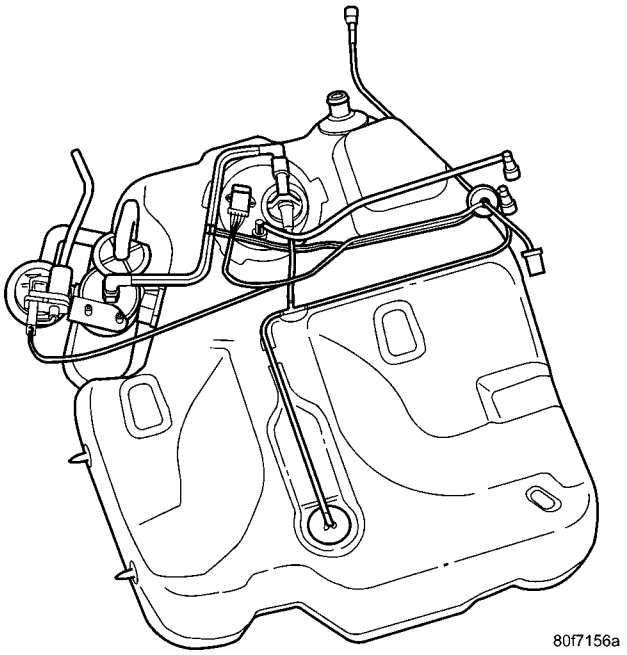

LDP FUEL TANK

OPERATION

All models pass a full 360 degree rollover test without fuel leakage. To accomplish this, fuel and vapor flow controls are required for all fuel tank connections.

All models are equipped with either one or two rollover valves mounted into the top of the fuel tank (or pump module).

An evaporation control system is connected to the rollover valve(s)/control valve(Refer to 25 - EMISSIONS CONTROL/EVAPORATIVE EMISSIONS/ ORVR - OPERATION) to reduce emissions of fuel vapors into the atmosphere, when the tank is vented due to vapor expansion in the tank. When fuel evaporates from the fuel tank, vapors pass through vent hoses or tubes to a charcoal canister where they are temporarily held. When the engine is running, the vapors are drawn into the intake manifold. In addition, fuel vapors produced during vehicle refueling are allowed to pass through the vent hoses/tubes to the charcoal canister(s) for temporary storage (prior to being drawn into the intake manifold). All models are equipped with a self-diagnosing system using a Leak Detection Pump (LDP) or Natural Vacuum Leak Detection (NVLD). Refer to the Emission Control System for additional information.

FUEL TANK (Continued)

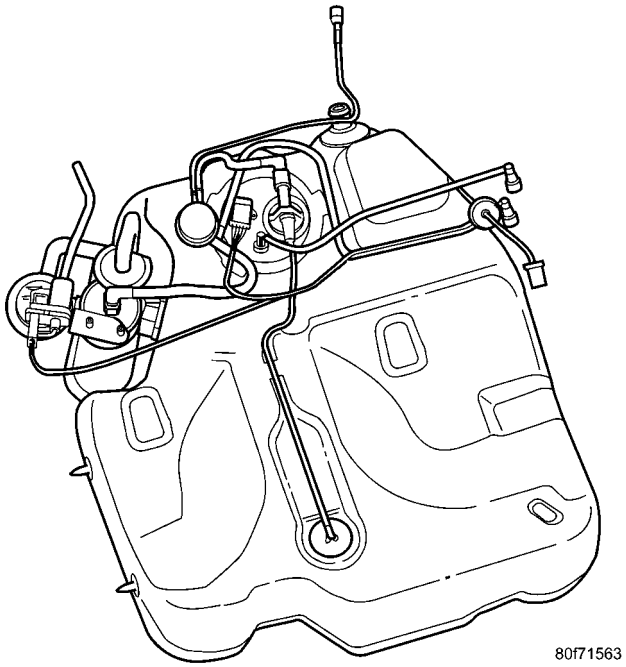

FLEX FUEL VEHICLE (FFV) FUEL TANK

INLET CHECK VALVE

All vehicles have an inlet check valve on the inside of the fuel tank at the filler inlet

The valve prevents fuel from splashing back on customer during vehicle refueling. The valve is a non-serviceable item.

REMOVAL

(1) Remove fuel filler cap and perform Fuel System Pressure Release procedure.

(2) Disconnect negative cable from battery.

(3) Drain fuel tank dry into holding tank or a properly labeled **GASOLINE** safety container.

(4) Raise vehicle on hoist and support.

(5) Use a transmission jack to support fuel tank. Remove bolts from fuel tank straps.

(6) Lower tank slightly.

(7) Disconnect the fuel filler vent tube.

(8) Disconnect fuel line and vapor line.

(9) Disconnect the vacuum line from the NVLD.

(10) Disconnect fuel filler tube by loosing the clamp and removing hose.

(11) Slide fuel pump module electrical connector lock to unlock.**The fuel pump module electrical connector has a retainer that locks it in place**.

(12) Push down on connector retainer and pull connector off module.

(13) Lower tank from vehicle.

INSTALLATION

(1) Position fuel tank on transmission jack.

(2) Raise tank into position and carefully work filler tube onto the fuel tank. A light coating of clean engine oil on the tube end may be used to aid assembly. Connect fuel filler tube hose and tighten clamp.

(3) Connect fuel pump/module electrical connector. Place retainer in locked position.

(4) Connect the EVAP, vapor, and vacuum lines.

(5) Lubricate the fuel supply line with clean 30 weight engine oil, install the quick connect fuel fitting. Refer to Tube/Fitting Assembly in the Fuel Delivery section of this section.

(6) Attach filler vent line to filler tube. Pull on connector to make sure of connection.

(7) Place NVLD air filter under right rear tank strap before tightening.

(8) Tighten strap bolts to 54 N·m (40 ft. lbs.) torque. Remove transmission jack.

(9) Tighten filler hose clamp to 3.6 N·m (31.8 in. lbs.).

CAUTION: Ensure straps are not twisted or bent before or after tightening strap nuts.

(10) Fill fuel tank, replace cap, and connect battery negative cable.

(11) Use the DRBIII® scan tool to pressurize the fuel system. Check for leaks.

FUEL TANK FILLER TUBE

REMOVAL

(1) Disconnect negative cable from battery.

(2) Drain fuel tank.

(3) Remove 3 screws from filler neck to quarter panel (Fig. 15).

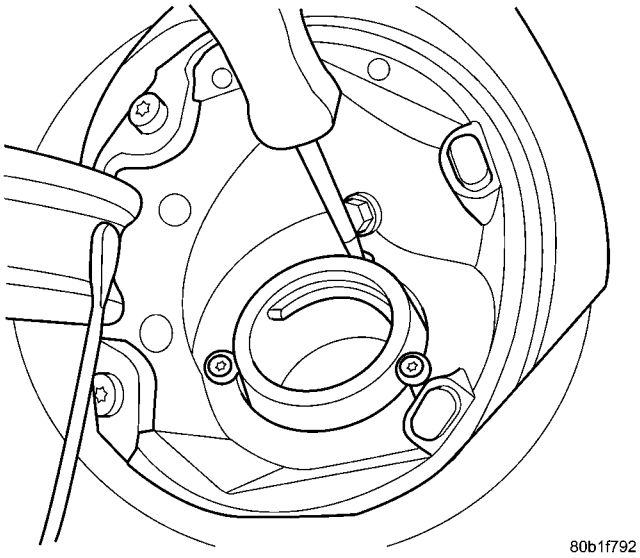

Fig. 15 FILLER DOOR

(4) Raise and support vehicle on host.

(5) Remove the ground strap.

FUEL TANK FILLER TUBE (Continued)

(6) Loosen clamps at filler neck.
(7) Remove filler neck from the fuel tank.
(8) Use transmission jack to support the fuel tank.
(9) Remove the rear bolts for fuel tank straps.
(10) Lower the fuel tank enough to reach the filler tube vent line connection.
(11) Disconnect the filler tube vent line.
(12) Remove the fuel filler tube.

INSTALLATION

(1) Install filler neck to filler hose.
(2) Connect the fuel filler vent tube.
(3) Raise fuel tank into position.
(4) Install fuel tank straps and tighten bolts to 54 N·m (39.8 ft. lbs).
(5) Remove the transmission jack.
(6) Tighten clamps 3.6 N·m (31.8 in. lbs.).
(7) Install ground strap 8.4 N·m (75 in. lbs.).
(8) Lower vehicle.
(9) Install 3 screws to filler neck and quarter panel (Fig. 15) 1.9 N·m (16 in. lbs.).
(10) Fill tank and check for leaks.
(11) Connect negative cable from battery.

FUEL TANK VENT TUBE

REMOVAL

(1) Perform fuel system pressure release.
(2) Disconnect negative cable from battery.
(3) Drain fuel tank.
(4) Raise and support vehicle on host.
(5) Lower fuel tank, refer to Fuel Tank Removal/ Installation in this section.
(6) Remove vent hose from top of tank.
(7) Remove vent hose from fuel filler neck.

INSTALLATION

(1) Install vent hose and tighten clamp.
(2) Install fuel tank, refer to Fuel Tank Removal/ Installation in this section.
(3) Install vent hose to fuel filler neck and tighten clamp.
(4) Lower vehicle.
(5) Fill fuel tank and check for leaks.
(6) Connect negative cable to battery.

QUICK CONNECT FITTING

STANDARD PROCEDURE - QUICK-CONNECT FITTINGS

REMOVAL

When disconnecting a quick-connect fitting, the retainer will remain on the fuel tube nipple.

WARNING: RELEASE FUEL SYSTEM PRESSURE BEFORE DISCONNECTING A QUICK-CONNECT FITTINGS. REFER TO THE FUEL PRESSURE RELEASE PROCEDURE.

(1) Perform Fuel Pressure Release Procedure. Refer to the Fuel Pressure Release Procedure in this section.
(2) Disconnect negative cable from battery or auxiliary jumper terminal.
(3) Squeeze retainer tabs together and pull fuel tube/quick-connect fitting assembly off of fuel tube nipple. The retainer will remain on fuel tube.

INSTALLATION

CAUTION: Never install a quick-connect fitting without the retainer being either on the fuel tube or already in the quick-connect fitting. In either case, ensure the retainer locks securely into the quick-connect fitting by firmly pulling on fuel tube and fitting to ensure it is secured.

(1) Using a clean lint free cloth, clean the fuel tube nipple and retainer.
(2) Prior to connecting the fitting to the fuel tube, coat the fuel tube nipple with clean engine oil.
(3) Push the quick-connect fitting over the fuel tube until the **retainer seats and a click is heard.**
(4) The plastic quick-connect fitting has windows in the sides of the casing. When the fitting completely attaches to the fuel tube, the retainer locking ears and the fuel tube shoulder are visible in the windows. If they are not visible, the retainer was not properly installed (Fig. 16). **Do not rely upon the audible click to confirm a secure connection.**

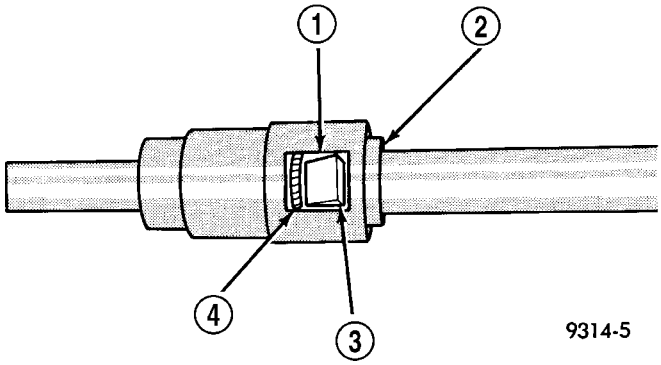

Fig. 16 Plastic Quick-Connect Fitting/Fuel Tube Connection

1 - WINDOW
2 - TAB (2)
3 - EAR
4 - SHOULDER (ON TUBE)

(5) Connect negative cable to battery or auxiliary jumper terminal.

QUICK CONNECT FITTING (Continued)

CAUTION: When using the ASD Fuel System Test, the Auto Shutdown (ASD) Relay remains energized for several minutes, until the test is stopped, or until the ignition switch is turned to the Off position.

(6) Use the DRB III® scan tool ASD Fuel System Test to pressurize the fuel system. Check for leaks.

TWO-TAB TYPE FITTING

This type of fitting is equipped with tabs located on both sides of the fitting (Fig. 17). These tabs are supplied for disconnecting the quick-connect fitting from component being serviced.

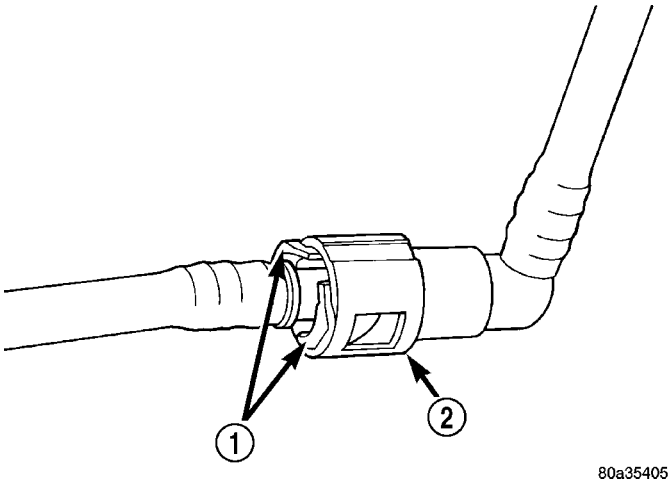

Fig. 17 Typical Two-Tab Type Quick-Connect Fitting

1 - TAB(S)
2 - QUICK-CONNECT FITTING

CAUTION: The interior components (O-rings, spacers) of this type of quick-connect fitting are not serviced separately, but new plastic retainers are available. Do not attempt to repair damaged fittings or fuel lines/tubes. If repair is necessary, replace the complete fuel tube assembly.

WARNING: THE FUEL SYSTEM IS UNDER A CONSTANT PRESSURE (EVEN WITH THE ENGINE OFF). BEFORE SERVICING ANY FUEL SYSTEM HOSES, FITTINGS OR LINES, THE FUEL SYSTEM PRESSURE MUST BE RELEASED. REFER TO THE FUEL PRESSURE RELEASE PROCEDURE IN THIS GROUP.

DISCONNECTION/CONNECTION

(1) Perform fuel pressure release procedure. Refer to Fuel Pressure Release Procedure in this group.

(2) Disconnect negative battery cable from battery or auxiliary jumper terminal.

(3) Clean fitting of any foreign material before disassembly.

(4) To disconnect quick-connect fitting, squeeze plastic retainer tabs (Fig. 17) against sides of quick-connect fitting with your fingers. Tool use is not required for removal and may damage plastic retainer. Pull fitting from fuel system component being serviced. The plastic retainer will remain on component being serviced after fitting is disconnected. The O-rings and spacer will remain in quick-connect fitting connector body.

(5) Inspect quick-connect fitting body and component for damage. Replace as necessary.

CAUTION: When the quick-connect fitting was disconnected, the plastic retainer will remain on the component being serviced. If this retainer must be removed, very carefully release the retainer from the component with two small screwdrivers. After removal, inspect the retainer for cracks or any damage.

(6) Prior to connecting quick-connect fitting to component being serviced, check condition of fitting and component. Clean parts with a lint-free cloth. Lubricate with clean engine oil.

(7) Insert quick-connect fitting to component being serviced and into plastic retainer. When a connection is made, a click will be heard.

(8) Verify a locked condition by firmly pulling on fuel tube and fitting (15-30 lbs.).

(9) Connect negative cable to battery or auxiliary jumper terminal.

(10) Use the DRB III® scan tool ASD Fuel System Test to pressurize the fuel system. Check for leaks.

PLASTIC RETAINER RING TYPE FITTING

This type of fitting can be identified by the use of a full-round plastic retainer ring (Fig. 18) usually black in color.

CAUTION: The interior components (O-rings, spacers, retainers) of this type of quick-connect fitting are not serviced separately. Do not attempt to repair damaged fittings or fuel lines/tubes. If repair is necessary, replace the complete fuel tube assembly.

WARNING: THE FUEL SYSTEM IS UNDER A CONSTANT PRESSURE (EVEN WITH THE ENGINE OFF). BEFORE SERVICING ANY FUEL SYSTEM HOSES, FITTINGS OR LINES, THE FUEL SYSTEM PRESSURE MUST BE RELEASED. REFER TO THE FUEL SYSTEM PRESSURE RELEASE PROCEDURE IN THIS GROUP.

QUICK CONNECT FITTING (Continued)

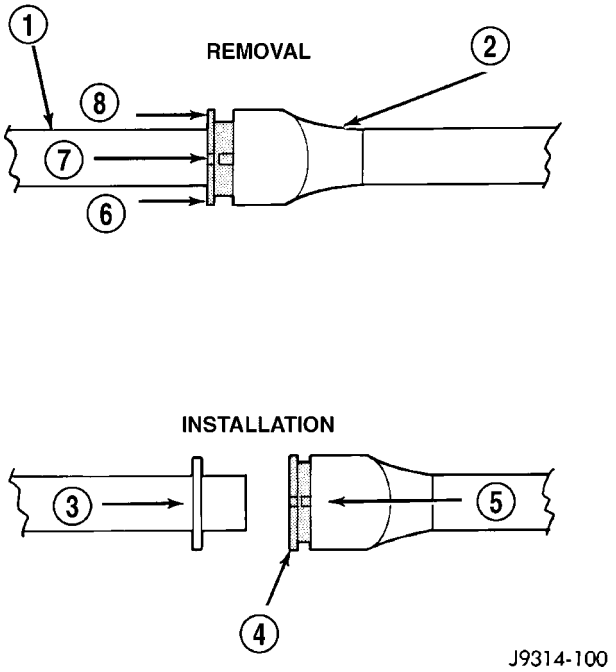

Fig. 18 Plastic Retainer Ring Type Fitting

1 - FUEL TUBE
2 - QUICK CONNECT FITTING
3 - PUSH
4 - PLASTIC RETAINER
5 - PUSH
6 - PUSH
7 - PUSH
8 - PUSH

DISCONNECTION/CONNECTION

(1) Perform fuel pressure release procedure. Refer to Fuel Pressure Release Procedure in this section.

(2) Disconnect negative battery cable from battery or auxiliary jumper terminal.

(3) Clean fitting of any foreign material before disassembly.

(4) To release fuel system component from quick-connect fitting, firmly push fitting towards component being serviced while firmly pushing plastic retainer ring into fitting (Fig. 18). With plastic ring depressed, pull fitting from component. **The plastic retainer ring must be pressed squarely into fitting body. If this retainer is cocked during removal, it may be difficult to disconnect fitting. Use an open-end wrench on shoulder of plastic retainer ring to aid in disconnection.**

(5) After disconnection, plastic retainer ring will remain with quick-connect fitting connector body.

(6) Inspect fitting connector body, plastic retainer ring and fuel system component for damage. Replace as necessary.

(7) Prior to connecting quick-connect fitting to component being serviced, check condition of fitting and component. Clean parts with a lint-free cloth. Lubricate with clean engine oil.

(8) Insert quick-connect fitting into component being serviced until a click is felt.

(9) Verify a locked condition by firmly pulling on fuel tube and fitting (15-30 lbs.).

(10) Connect negative battery cable to battery or auxiliary jumper terminal.

(11) Use the DRB III® scan tool ASD Fuel System Test to pressurize the fuel system. Check for leaks.

FUEL INJECTION

TABLE OF CONTENTS

page

FUEL INJECTION
OPERATION
OPERATION - INJECTION SYSTEM 16
OPERATION - MODES OF OPERATION 16
FUEL CORRECTION or ADAPTIVE MEMORIES 18
PROGRAMMABLE COMMUNICATIONS INTERFACE (PCI) BUS 19
SYSTEM DIAGNOSIS 20
SPECIFICATIONS
TORQUE 20
SPECIAL TOOLS
FUEL 21
ACCELERATOR PEDAL
REMOVAL 21
INSTALLATION 22
CRANKSHAFT POSITION SENSOR
DESCRIPTION 22
OPERATION 22
REMOVAL
REMOVAL - 4 CYLINDER 24
REMOVAL - 2.7L 24
INSTALLATION
INSTALLATION - 4 CYLINDER 24
INSTALLATION - 2.7L 24
ENGINE SPEED SENSOR
DESCRIPTION 24
OPERATION 25
FUEL INJECTOR
DESCRIPTION 25
OPERATION 25
REMOVAL
REMOVAL - 4 CYLINDER 25
REMOVAL - 2.7L 26
INSTALLATION
INSTALLATION - 4 CYLINDER 26
INSTALLATION - 2.7L 26
FUEL PUMP RELAY
DESCRIPTION 27
OPERATION 27
IDLE AIR CONTROL MOTOR
DESCRIPTION 27
OPERATION 27
REMOVAL
REMOVAL - 4 CYLINDER 28
REMOVAL - 2.7L 28
INSTALLATION
INSTALLATION - 4 CYLINDER 28
INSTALLATION - 2.7L 28

page

INLET AIR TEMPERATURE SENSOR
DESCRIPTION 28
OPERATION 28
MAP SENSOR
DESCRIPTION 29
OPERATION 29
REMOVAL
REMOVAL - 4 CYLINDER 30
REMOVAL - 2.7L 30
INSTALLATION
INSTALLATION - 4 CYLINDER 31
INSTALLATION - 2.7L 31
O2 SENSOR
DESCRIPTION 31
OPERATION 31
REMOVAL
REMOVAL - DOWNSTREAM 1/2 4 CYLINDER 32
REMOVAL - Downstream 1/2, 2/2 2.7L 33
REMOVAL - Upstream 1/1, 2/1 2.7L 33
REMOVAL - UPSTREAM 1/1 4 CYLINDER . . . 33
INSTALLATION
INSTALLATION - DOWNSTREAM 1/2 4 CYLINDER 33
INSTALLATION - Downstream 1/2, 2/2 2.7L . . 33
INSTALLATION - Upstream 1/1, 2/1 2.7L 33
INSTALLATION - UPSTREAM 1/1 4 CYLINDER 34
THROTTLE BODY
DESCRIPTION 34
OPERATION 34
REMOVAL
REMOVAL - 4 CYLINDER 34
REMOVAL - 2.7L 35
INSTALLATION
INSTALLATION - 4 CYLINDER 36
INSTALLATION - 2.7L 36
THROTTLE CONTROL CABLE
REMOVAL 36
INSTALLATION 38
THROTTLE POSITION SENSOR
DESCRIPTION 38
OPERATION 38
REMOVAL
REMOVAL - 4 CYLINDER 38
REMOVAL - 2.7L 38
INSTALLATION
INSTALLATION - 4 CYLINDER 39
INSTALLATION - 2.7L 39

FUEL INJECTION

OPERATION

OPERATION - INJECTION SYSTEM

All engines used in this section have a sequential Multi-Port Electronic Fuel Injection system. The MPI system is computer regulated and provides precise air/fuel ratios for all driving conditions. The Powertrain Control Module (PCM) operates the fuel injection system.

The PCM regulates:

- Ignition timing
- Air/fuel ratio
- Emission control devices
- Cooling fan
- Charging system
- Idle speed
- Vehicle speed control

Various sensors provide the inputs necessary for the PCM to correctly operate these systems. In addition to the sensors, various switches also provide inputs to the PCM.

The PCM can adapt its programming to meet changing operating conditions.

Fuel is injected into the intake port above the intake valve in precise metered amounts through electrically operated injectors. The PCM fires the injectors in a specific sequence. Under most operating conditions, the PCM maintains an air fuel ratio of 14.7 parts air to 1 part fuel by constantly adjusting injector pulse width. Injector pulse width is the length of time the injector is open.

The PCM adjusts injector pulse width by opening and closing the ground path to the injector. Engine RPM (speed) and manifold absolute pressure (air density) are the **primary** inputs that determine injector pulse width.

OPERATION - MODES OF OPERATION

As input signals to the PCM change, the PCM adjusts its response to output devices. For example, the PCM must calculate a different injector pulse width and ignition timing for idle than it does for Wide Open Throttle (WOT). There are several different modes of operation that determine how the PCM responds to the various input signals.

There are two different areas of operation, OPEN LOOP and CLOSED LOOP.

During OPEN LOOP modes the PCM receives input signals and responds according to preset PCM programming. Inputs from the upstream and downstream heated oxygen sensors are not monitored during OPEN LOOP modes, except for heated oxygen sensor diagnostics (they are checked for shorted conditions at all times).

During CLOSED LOOP modes the PCM monitors the inputs from the upstream and downstream heated oxygen sensors. The upstream heated oxygen sensor input tells the PCM if the calculated injector pulse width resulted in the ideal air-fuel ratio of 14.7 to one. By monitoring the exhaust oxygen content through the upstream heated oxygen sensor, the PCM can fine tune injector pulse width. Fine tuning injector pulse width allows the PCM to achieve optimum fuel economy combined with low emissions.

For the PCM to enter CLOSED LOOP operation, the following must occur:

(1) Engine coolant temperature must be over 35°F.

- If the coolant is over 35°F the PCM will wait 38 seconds.
- If the coolant is over 50°F the PCM will wait 15 seconds.
- If the coolant is over 167°F the PCM will wait 3 seconds.

(2) For other temperatures the PCM will interpolate the correct waiting time.

(3) O2 sensor must read either greater than 0.745 volts or less than 0.29 volt.

(4) The multi-port fuel injection systems has the following modes of operation:

- Ignition switch ON (Zero RPM)
- Engine start-up
- Engine warm-up
- Cruise
- Idle
- Acceleration
- Deceleration
- Wide Open Throttle
- Ignition switch OFF

(5) The engine start-up (crank), engine warm-up, deceleration with fuel shutoff and wide open throttle modes are OPEN LOOP modes. Under most operating conditions, the acceleration, deceleration (with A/C on), idle and cruise modes, **with the engine at operating temperature** are CLOSED LOOP modes.

IGNITION SWITCH ON (ZERO RPM) MODE

When the ignition switch activates the fuel injection system, the following actions occur:

- The PCM monitors the engine coolant temperature sensor and throttle position sensor input. The PCM determines basic fuel injector pulse width from this input.
- The PCM determines atmospheric air pressure from the MAP sensor input to modify injector pulse width.

When the key is in the ON position and the engine is not running (zero rpm), the Auto Shutdown (ASD) and fuel pump relays de-energize after approximately

FUEL INJECTION (Continued)

1 second. Therefore, battery voltage is not supplied to the fuel pump, ignition coil, fuel injectors and heated oxygen sensors.

ENGINE START-UP MODE

This is an OPEN LOOP mode. If the vehicle is in park or neutral (automatic transaxles) or the clutch pedal is depressed (manual transaxles) the ignition switch energizes the starter relay when the engine is not running. The following actions occur when the starter motor is engaged.

- If the PCM receives the camshaft position sensor and crankshaft position sensor signals, it energizes the Auto Shutdown (ASD) relay and fuel pump relay. If the PCM does not receive both signals within approximately one second, it will not energize the ASD relay and fuel pump relay. The ASD and fuel pump relays supply battery voltage to the fuel pump, fuel injectors, ignition coil, (EGR solenoid and PCV heater if equipped) and heated oxygen sensors.
- The PCM energizes the injectors (on the 69° degree falling edge) for a calculated pulse width until it determines crankshaft position from the camshaft position sensor and crankshaft position sensor signals. The PCM determines crankshaft position within 1 engine revolution.
- After determining crankshaft position, the PCM begins energizing the injectors in sequence. It adjusts injector pulse width and controls injector synchronization by turning the individual ground paths to the injectors On and Off.
- When the engine idles within ±64 RPM of its target RPM, the PCM compares current MAP sensor value with the atmospheric pressure value received during the Ignition Switch On (zero RPM) mode.

Once the ASD and fuel pump relays have been energized, the PCM determines injector pulse width based on the following:

- MAP
- Engine RPM
- Battery voltage
- Engine coolant temperature
- Inlet/Intake air temperature (IAT)
- Throttle position
- The number of engine revolutions since cranking was initiated

During Start-up the PCM maintains ignition timing at 9° BTDC.

ENGINE WARM-UP MODE

This is an OPEN LOOP mode. The following inputs are received by the PCM:

- Manifold Absolute Pressure (MAP)
- Crankshaft position (engine speed)
- Engine coolant temperature
- Inlet/Intake air temperature (IAT)
- Camshaft position
- Knock sensor
- Throttle position
- A/C switch status
- Battery voltage
- Vehicle speed
- Speed control
- O2 sensors

The PCM adjusts injector pulse width and controls injector synchronization by turning the individual ground paths to the injectors On and Off.

The PCM adjusts ignition timing and engine idle speed. Engine idle speed is adjusted through the idle air control motor.

CRUISE OR IDLE MODE

When the engine is at operating temperature this is a CLOSED LOOP mode. During cruising or idle the following inputs are received by the PCM:

- Manifold absolute pressure
- Crankshaft position (engine speed)
- Inlet/Intake air temperature
- Engine coolant temperature
- Camshaft position
- Knock sensor
- Throttle position
- Exhaust gas oxygen content (O2 sensors)
- A/C switch status
- Battery voltage
- Vehicle speed

The PCM adjusts injector pulse width and controls injector synchronization by turning the individual ground paths to the injectors On and Off.

The PCM adjusts engine idle speed and ignition timing. The PCM adjusts the air/fuel ratio according to the oxygen content in the exhaust gas (measured by the upstream and downstream heated oxygen sensor).

The PCM monitors for engine misfire. During active misfire and depending on the severity, the PCM either continuously illuminates or flashes the malfunction indicator lamp (Check Engine light on instrument panel). Also, the PCM stores an engine misfire DTC in memory, if 2nd trip with fault.

The PCM performs several diagnostic routines. They include:

- Oxygen sensor monitor
- Downstream heated oxygen sensor diagnostics during open loop operation (except for shorted)
- Fuel system monitor
- EGR monitor (if equipped)
- Purge system monitor
- Catalyst efficiency monitor
- All inputs monitored for proper voltage range, rationality.

FUEL INJECTION (Continued)

- All monitored components (refer to the Emission section for On-Board Diagnostics).

The PCM compares the upstream and downstream heated oxygen sensor inputs to measure catalytic convertor efficiency. If the catalyst efficiency drops below the minimum acceptable percentage, the PCM stores a diagnostic trouble code in memory, after 2 trips.

During certain idle conditions, the PCM may enter a variable idle speed strategy. During variable idle speed strategy the PCM adjusts engine speed based on the following inputs.

- A/C status
- Battery voltage
- Battery temperature or Calculated Battery Temperature
- Engine coolant temperature
- Engine run time
- Inlet/Intake air temperature
- Vehicle mileage

ACCELERATION MODE

This is a CLOSED LOOP mode. The PCM recognizes an abrupt increase in Throttle Position sensor output voltage or MAP sensor output voltage as a demand for increased engine output and vehicle acceleration. The PCM increases injector pulse width in response to increased fuel demand.

- Wide Open Throttle-open loop

DECELERATION MODE

This is a CLOSED LOOP mode. During deceleration the following inputs are received by the PCM:

- A/C status
- Battery voltage
- Inlet/Intake air temperature
- Engine coolant temperature
- Crankshaft position (engine speed)
- Exhaust gas oxygen content (upstream heated oxygen sensor)
- Knock sensor
- Manifold absolute pressure
- Throttle position sensor
- IAC motor (solenoid) control changes in response to MAP sensor feedback

The PCM may receive a closed throttle input from the Throttle Position Sensor (TPS) when it senses an abrupt decrease in manifold pressure. This indicates a hard deceleration (Open Loop). In response, the PCM may momentarily turn off the injectors. This helps improve fuel economy, emissions and engine braking.

WIDE-OPEN-THROTTLE MODE

This is an OPEN LOOP mode. During wide-open-throttle operation, the following inputs are used by the PCM:

- Inlet/Intake air temperature
- Engine coolant temperature
- Engine speed
- Knock sensor
- Manifold absolute pressure
- Throttle position

When the PCM senses a wide-open-throttle condition through the Throttle Position Sensor (TPS) it de-energizes the A/C compressor clutch relay. This disables the air conditioning system and disables EGR (if equipped).

The PCM adjusts injector pulse width to supply a predetermined amount of additional fuel, based on MAP and RPM.

IGNITION SWITCH OFF MODE

When the operator turns the ignition switch to the OFF position, the following occurs:

- All outputs are turned off, unless 02 Heater Monitor test is being run. Refer to the Emission section for On-Board Diagnostics.
- No inputs are monitored except for the heated oxygen sensors. The PCM monitors the heating elements in the oxygen sensors and then shuts down.

FUEL CORRECTION or ADAPTIVE MEMORIES

DESCRIPTION

In Open Loop, the PCM changes pulse width without feedback from the O2 Sensors. Once the engine warms up to approximately 30 to 35° F, the PCM goes into closed loop **Short Term Correction** and utilizes feedback from the O2 Sensors. Closed loop **Long Term Adaptive Memory** is maintained above 170° to 190° F unless the PCM senses wide open throttle. At that time the PCM returns to Open Loop operation.

OPERATION

Short Term

The first fuel correction program that begins functioning is the short term fuel correction. This system corrects fuel delivery in direct proportion to the readings from the Upstream O2 Sensor.

The PCM monitors the air/fuel ratio by using the input voltage from the O2 Sensor. When the voltage reaches its preset high or low limit, the PCM begins to add or remove fuel until the sensor reaches its switch point. The short term corrections then begin.

The PCM makes a series of quick changes in the injector pulse-width until the O2 Sensor reaches its

FUEL INJECTION (Continued)

opposite preset limit or switch point. The process then repeats itself in the opposite direction.

Short term fuel correction will keep increasing or decreasing injector pulse-width based upon the upstream O2 Sensor input. The maximum range of authority for short term memory is 25% (+/-) of base pulse-width. Short term is violated and is lost when ignition is turned OFF.

Long Term

The second fuel correction program is the long term adaptive memory. In order to maintain correct emission throughout all operating ranges of the engine, a cell structure based on engine rpm and load (MAP) is used.

Ther number of cells varies upon the driving conditions. Two cells are used only during idle, based upon TPS and Park/Neutral switch inputs. There may be two other cells used for deceleration, based on TPS, engine rpm, and vehicle speed. The other twelve cells represent a manifold pressure and an rpm range. Six of the cells are high rpm and the other six are low rpm. Each of these cells has a specific MAP voltage range Typical Adaptive Memory Fuel Cells.

As the engine enters one of these cells the PCM looks at the amount of short term correction being used. Because the goal is to keep short term at 0 (O2 Sensor switching at 0.5 volt), long term will update in the same direction as short term correction was moving to bring the short term back to 0. Once short term is back at 0, this long term correction factor is stored in memory.

The values stored in long term adaptive memory are used for all operating conditions, including open loop and cold starting. However, the updating of the long term memory occurs after the engine has exceeded approximately 170°-190° F, with fuel control in closed loop and two minutes of engine run time. This is done to prevent any transitional temperature or start-up compensations from corrupting long term fuel correction.

Long term adaptive memory can change the pulse-width by as much as 25%, which means it can correct for all of short term. It is possible to have a problem that would drive long term to 25% and short term to another 25% for a total change of 50% away from base pulse-width calculation.

TYPICAL ADAPTIVE MEMORY FUEL CELLS

	Open Throttle	Open Throttle	Open Throttle	Open Throttle	Open Throttle	Open Throttle	Idle	Decel
Vacuum	20	17	13	9	5	0		
Above 1,984 rpm	1	3	5	7	9	11	13 Drive	15
Below 1,984 rpm	0	2	4	6	8	10	12 Neutral	14
MAP volt =	0	1.4	2.0	2.6	3.3	3.9		

Fuel Correction Diagnostics

There are two fuel correction diagnostic routines:

- Fuel System Rich
- Fuel System Lean

A DTC is set and the MIL is illuminated if the PCM detects either of these conditions. This is determined based on total fuel correction, short term times long term.

PROGRAMMABLE COMMUNICATIONS INTERFACE (PCI) BUS

DESCRIPTION

The Programmable Communication Interface Multiplex system (PCI Bus) consist of a single wire. The Body Control Module (BCM) acts as a splice to connect each module and the Data Link Connector (DLC) together. Each module is wired in parallel to the data bus through its PCI chip set and uses its ground as the bus reference. The wiring is a minimum 20 gage wire.

OPERATION

Various modules exchange information through a communications port called the PCI Bus. The Powertrain Control Module (PCM) transmits the Malfunction Indicator Lamp (Check Engine) On/Off signal and engine RPM on the PCI Bus. The PCM receives the Air Conditioning select input, transaxle gear position inputs over the PCI Bus. The PCM also receives the air conditioning evaporator temperature signal from the PCI Bus.

The following components access or send information on the PCI Bus.

FUEL INJECTION (Continued)

- Instrument Panel
- Body Control Module
- Air Bag System Diagnostic Module
- Full ATC Display Head (if equipped)
- ABS Module
- Transmission Control Module
- Powertrain Control Module
- Travel Module
- SKIM

SYSTEM DIAGNOSIS

OPERATION

The PCM can test many of its own input and output circuits. If the PCM senses a fault in a major system, the PCM stores a Diagnostic Trouble Code (DTC) in memory.

For DTC information see On-Board Diagnostics (Refer to 8 - ELECTRICAL/ELECTRONIC CONTROL MODULES/POWERTRAIN CONTROL MODULE - DESCRIPTION) .

SPECIFICATIONS

TORQUE

DESCRIPTION	N·m	Ft. Lbs.	In. Lbs.
MAP SENSOR 4-CYLINDER	4.5		40
MAP SENSOR 2.7L	4.5		40
POWER STEERING RESERVOIR PLASTIC MANIFOLD	5.7		50
POWER STEERING RESERVOIR ALUMINUM MANIFOLD	11.9		105
THROTTLE CABLE BRACKET 4-CYLINDER	14.1		125
THROTTLE CABLE BRACKET 2.7L	13.6		120
THROTTLE BODY BOLTS 4-CYLINDER	13.6		120
THROTTLE BODY BOLTS 2.7L	13.6		120
LOWER SUPPORT BRACKET 2.7L	31.1	23	
O2 Sensors	27	20	
The composite manifolds uses special Plastic screws. The factory installed Plastic screws can be removed and installed up to 5 times. Do not exceed the specified torque. These screws must be installed slowly (less than 600 rpms) to avoid melting the parent material. There are service repair screws available for repair. They require a higher torque than the original screws.			

FUEL INJECTION (Continued)

SPECIAL TOOLS

FUEL

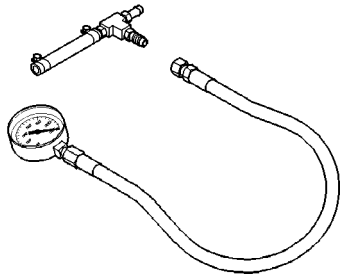

Pressure Gauge Assembly C–4799–B

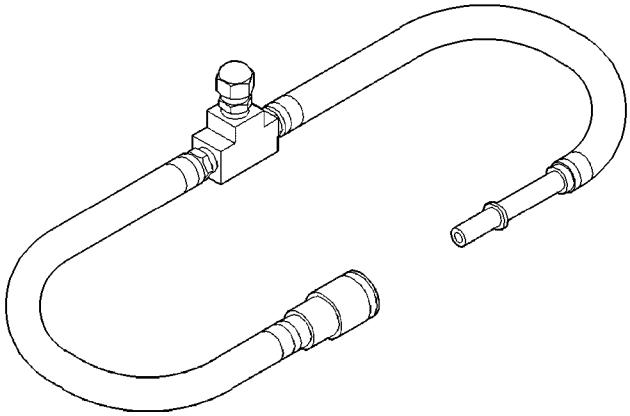

Fuel Pressure Test Adapter 6539

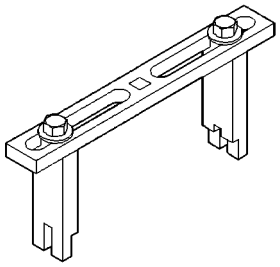

Spanner Wrench 6856

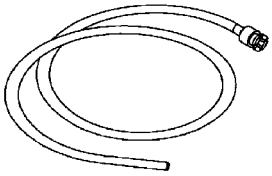

Fuel Line Adapter 1/4

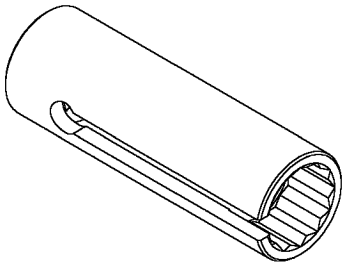

O2S (Oxygen Sensor) Remover/Installer—C-4907

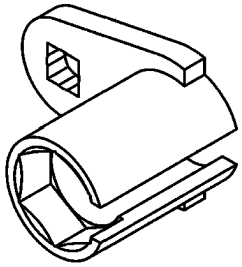

O2S (Oxygen Sensor) Remover/Installer - 8439

ACCELERATOR PEDAL

REMOVAL

(1) Hold the throttle body throttle lever in the wide open position. Remove the throttle cable from the throttle body cam (Fig. 1).

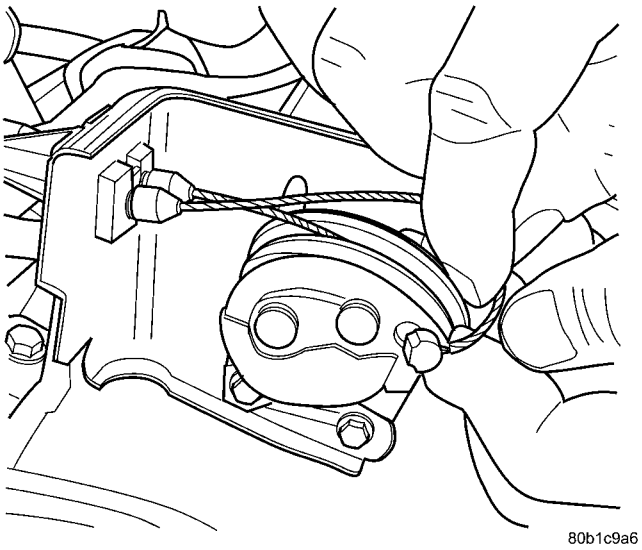

Fig. 1 THROTTLE CABLE RELEASE

(2) From inside the vehicle, hold up the pedal and remove the pedal retainer and throttle cable from the upper end of the pedal lever (Fig. 2).

(3) Remove nuts from accelerator pedal attaching studs. Remove assembly from vehicle (Fig. 3).

ACCELERATOR PEDAL (Continued)

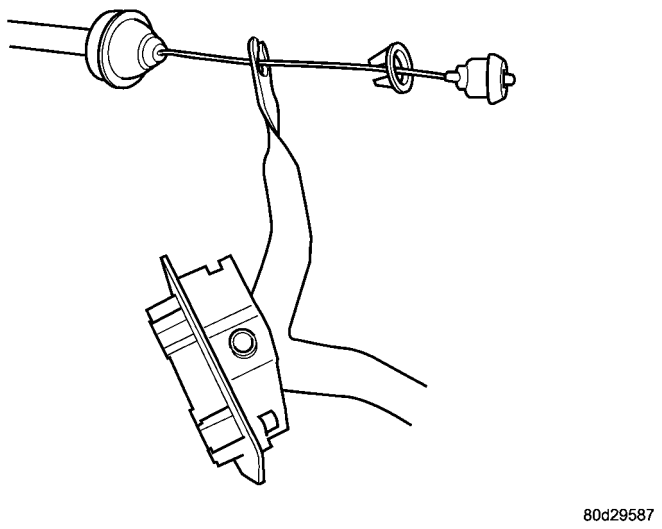

Fig. 2 CABLE CLIP

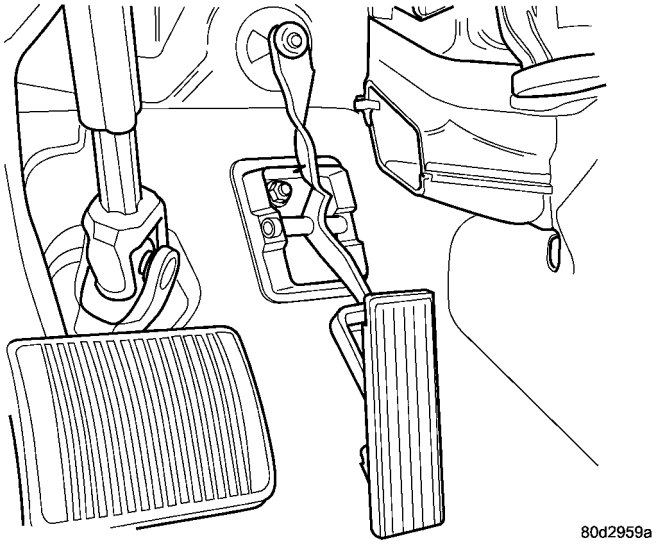

Fig. 3 ACCELERATOR PEDAL

INSTALLATION

(1) Position accelerator pedal assembly on dash panel. Install retaining nuts. Tighten retaining nuts to 12 N·m (105 in. lbs.) torque (Fig. 3).

(2) From inside the vehicle, hold up the pedal and install the throttle cable and pedal retainer in the upper end of the pedal lever (Fig. 2).

(3) From the engine compartment, hold the throttle body lever in the wide open position and install the throttle cable (Fig. 1).

CRANKSHAFT POSITION SENSOR

DESCRIPTION

The 4 cylinder crankshaft sensor is located on the rear of the engine near the accessory drive belt (Fig. 4). The 2.7L crankshaft sensor is located on the rear of the transmission housing, above the differential housing (Fig. 5). The bottom of the sensor is positioned next to the drive plate.

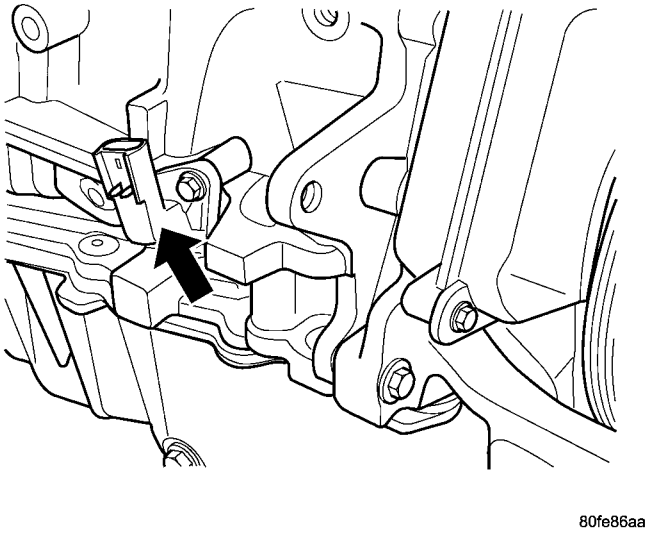

Fig. 4 4 Cylinder

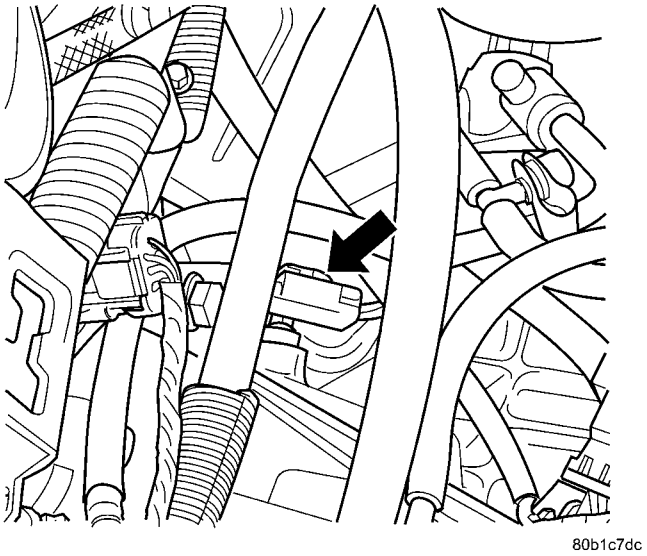

Fig. 5 2.7L

OPERATION

The Crankshaft Position (CKP) sensor is a Hall-effect sensor. The PCM sends approximately 8 volts to the Hall-effect sensor for the SBEC vehicles and 5

CRANKSHAFT POSITION SENSOR (Continued)

volts for the NGC vehicles. This voltage is required to operate the Hall-effect chip and the electronics inside the sensor. A ground for the sensor is provided through the sensor return circuit of the PCM. The input to the PCM occurs on a 5 volt output reference circuit.

The notches generate pulses from high to low in the crankshaft position sensor output voltage (Fig. 6). When a metal portion of the counterweight aligns with the crankshaft position sensor, the sensor output voltage goes low (less than 0.5 volts). When a notch aligns with the sensor, voltage goes high (5.0 volts). As a group of notches pass under the sensor, the output voltage switches from low (metal) to high (notch) then back to low.

If available, an oscilloscope can display the square wave patterns of each voltage pulses. From the width of the output voltage pulses, the PCM calculates engine speed. The width of the pulses represent the amount of time the output voltage stays high before switching back to low. The period of time the sensor output voltage stays high before switching back to low is referred to as pulse width. The faster the engine is operating, the smaller the pulse width on the oscilloscope.

For SBEC vehicles, each group of timing reference notches, the first notch represents 69 degrees before top dead center (BTDC). The second notch represents 49 degrees BTDC. The third notch represents 29 degrees. The last notch in each set represents 9 degrees before top dead center (TDC). There is also a notch at 11 degrees before top dead center (TDC).

The crankshaft position sensor detects slots cut into the transmission driveplate extension (Fig. 7). There are 3 sets of slots. Two sets contains 4 slots, and 1 set contains 5 slots for a total of 13 slots (Fig. 8). Basic timing is set by the position of the last slot in each group. Once the Powertrain Control Module (PCM) senses the last slot, it determines crankshaft position (which piston will next be at TDC) from the camshaft position sensor input. The 4 pulses generated by the crankshaft position sensor represent the 69°, 49°, 29°, and 9° BTDC marks. It may take the PCM one engine revolution to determine crankshaft position.

The PCM uses crankshaft position reference to determine injector sequence, ignition timing and the presence of misfire. Once the PCM determines crankshaft position, it begins energizing the injectors in sequence.

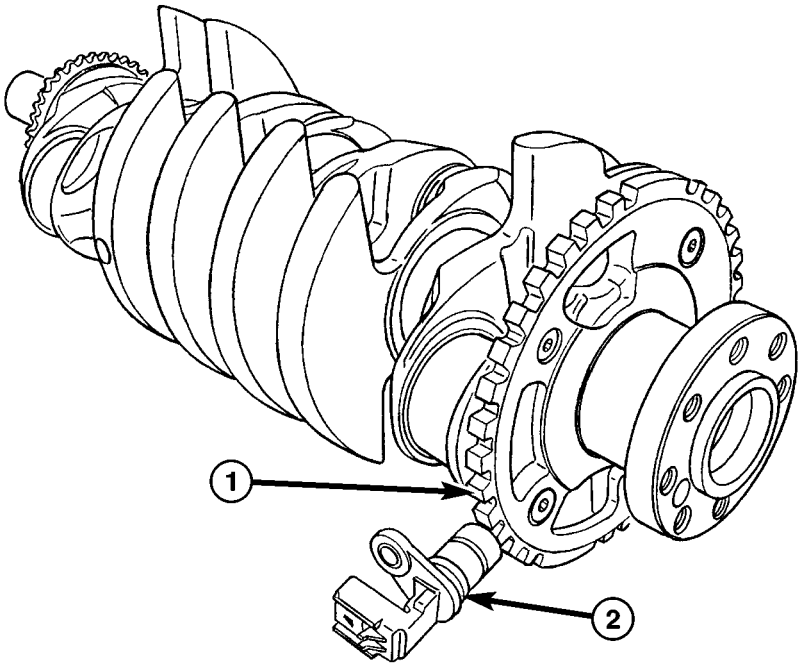

Fig. 6 Timing Reference Notches - 4 Cylinder

1 - MACHINED NOTCHES
2 - CRANKSHAFT POSITION SENSOR

CRANKSHAFT POSITION SENSOR (Continued)

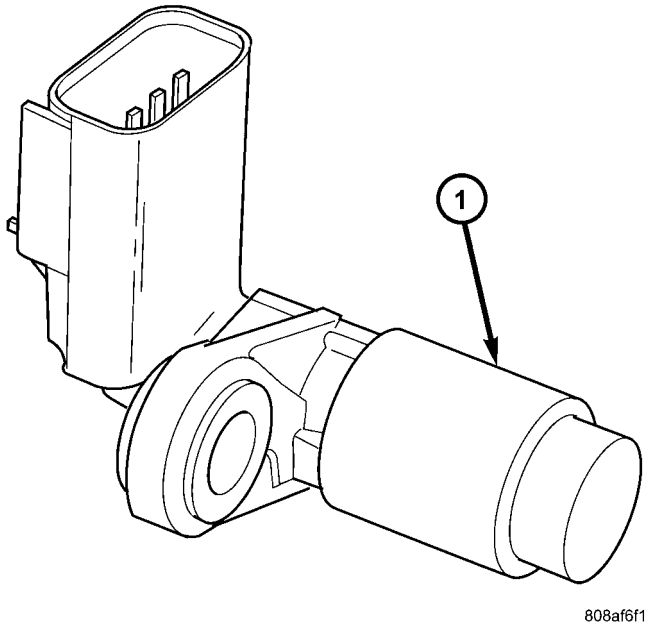

Fig. 7 Crankshaft Position Sensor - 2.7L

1 - CRANKSHAFT POSITION SENSOR

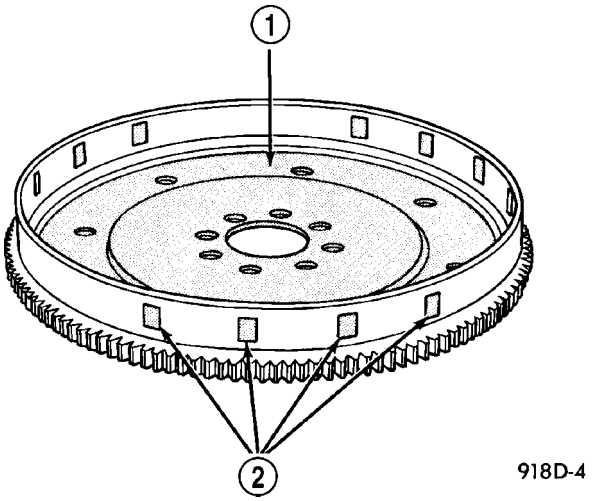

Fig. 8 Timing Slots - 2.7L

1 - TORQUE CONVERTER DRIVE PLATE
2 - SLOTS

REMOVAL

REMOVAL - 4 CYLINDER

(1) Disconnect the negative battery cable.
(2) Raise vehicle and support.
(3) Disconnect the electrical connector (Fig. 4).
(4) Remove crankshaft sensor bolt.
(5) Remove the crankshaft sensor.

REMOVAL - 2.7L

(1) Disconnect the negative battery cable.
(2) Remove the air cleaner box.
(3) Disconnect the electrical connector from Crankshaft position sensor (Fig. 9).

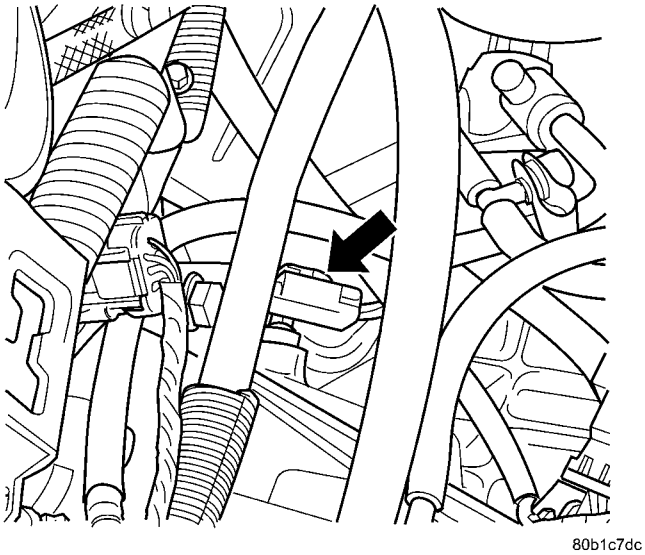

Fig. 9 CRANKSHAFT SENSOR 2.7L

(4) Remove bolt.
(5) Remove sensor.

INSTALLATION

INSTALLATION - 4 CYLINDER

(1) Install the crankshaft sensor.
(2) Install crankshaft sensor bolt and tighten.
(3) Connect the electrical connector (Fig. 4).
(4) Lower vehicle.
(5) Connect the negative battery cable.

INSTALLATION - 2.7L

(1) Install crankshaft sensor (Fig. 9).
(2) Tighten bolt.
(3) Install air cleaner box.
(4) Connect the negative battery cable.

ENGINE SPEED SENSOR

DESCRIPTION

The PCM receives a signal from the TCM to indicate vehicle speed on automatic transmission cars. On 4 cylinder Manual transmission cars (if equipped) vehicle, a dedicated vehicle speed sensor is connected to the PCM.On V-6 Manual transmission cars (if equipped) vehicle, the ABS module provides the signal to the PCM for vehicle speed.

ENGINE SPEED SENSOR (Continued)

OPERATION

The Transmission Control Module (TCM) supplies the road speed and distance traveled inputs to the PCM. From these inputs and the throttle position sensor input, the PCM determines when a deceleration condition occurs.

FUEL INJECTOR

DESCRIPTION

The injectors are positioned in the intake manifold or cylinder head with the nozzle ends directly above the intake valve port (Fig. 10).

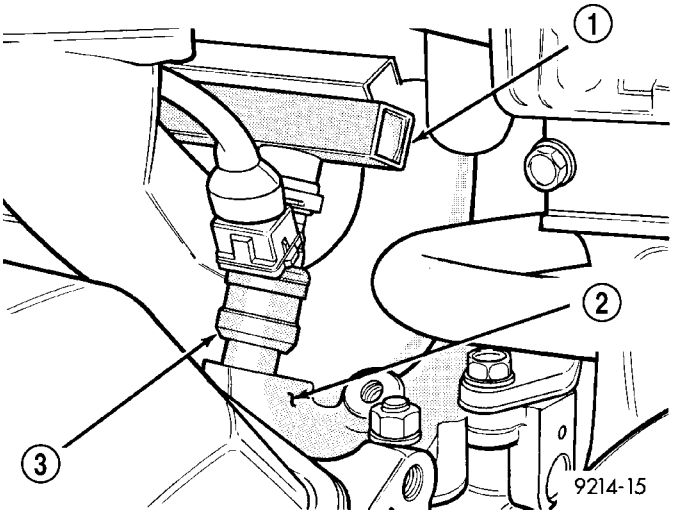

Fig. 10 Fuel Injector Location - Typical

1 - FUEL RAIL
2 - INTACK MANIFOLD
3 - FUEL INJECTORS

OPERATION

The fuel injectors are 12 volt electrical solenoids (Fig. 11). The injector contains a pintle that closes off an orifice at the nozzle end. When electric current is supplied to the injector, the armature and needle move a short distance against a spring, allowing fuel to flow out the orifice. Because the fuel is under high pressure, a fine spray is developed in the shape of a hollow cone or two streams. The spraying action atomizes the fuel, adding it to the air entering the combustion chamber. Fuel injectors are not interchangeable between engines.

The PCM provides battery voltage to each injector through the ASD relay. Injector operation is controlled by a ground path provided for each injector by the PCM. Injector on-time (pulse-width) is variable, and is determined by the PCM processing all the data previously discussed to obtain the optimum injector pulse width for each operating condition. The pulse width is controlled by the duration of the ground path provided.

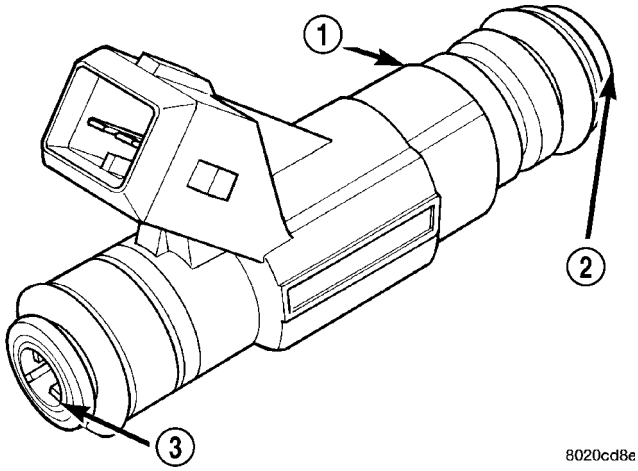

Fig. 11 FUEL INJECTOR - TYPICAL

1 - FUEL INJECTOR
2 - NOZZLE
3 - TOP (FUEL ENTRY)

REMOVAL

REMOVAL - 4 CYLINDER

The fuel rail must be removed first (Fig. 12). Refer to Fuel Rail Removal in this section.

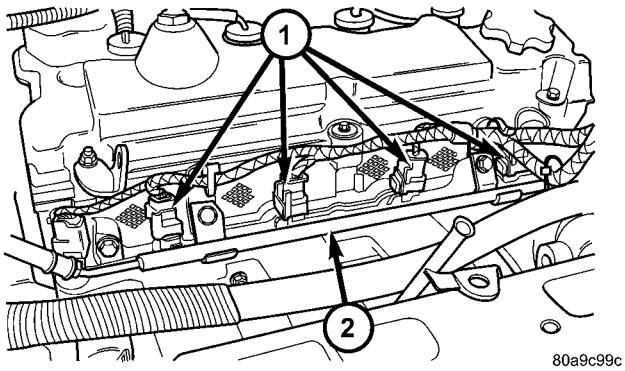

Fig. 12 FUEL RAIL AND INJECTORS

1 - Fuel Injectors
2 - Fuel Rail

(1) Position fuel rail assembly so that the fuel injectors are easily accessible (Fig. 13).

(2) Remove injector clip and pull injector out of fuel rail.

(3) Check injector O-ring for damage. If O-ring is damaged, it must be replaced. Replace the injector clip if it is damaged.

(4) Repeat for remaining injectors.

FUEL INJECTOR (Continued)

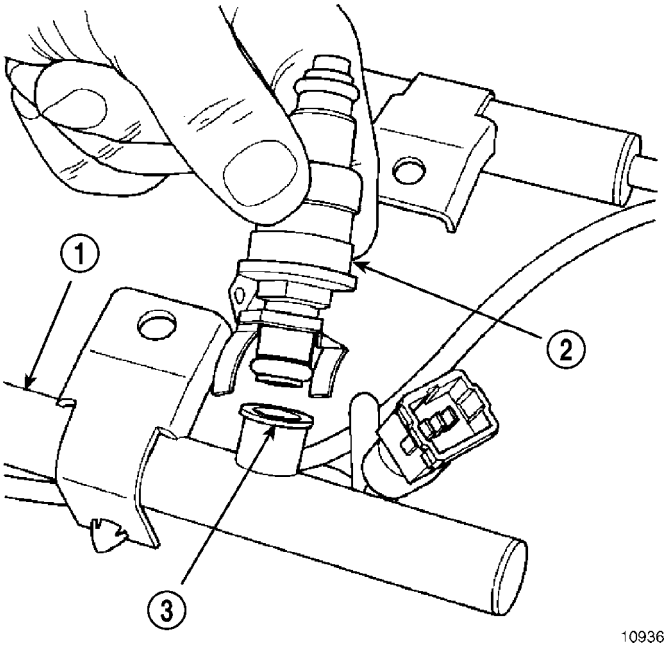

Fig. 13 FUEL INJECTOR AND RAIL - TYPICAL

1 - FUEL RAIL ASSEMBLY
2 - FUEL INJECTOR
3 - FUEL RAIL RECEIVER

REMOVAL - 2.7L

(1) Release fuel system pressure. Refer to Fuel System Pressure Release Procedure in this section.

(2) Disconnect negative cable to battery.

(3) Remove intake manifold plenum. Refer to the Engine section for information.

(4) Remove intake manifold plenum mounting bolts. Lift Plenum up off of engine. Cover intake manifold to prevent foreign material from entering engine.

(5) Disconnect fuel supply tube quick connect fittings at the rear of intake manifold. Refer to Quick Connect Fittings in the Fuel Delivery Section.

(6) If the injector connectors are not tagged with their cylinder number, tag them to identify the correct cylinder

(7) Remove electrical connectors from the fuel injectors.

(8) Remove fuel rail mounting bolts.

(9) Lift fuel rail straight up off of the cylinder head.

(10) Remove retaining clips from fuel injectors at fuel rail.

(11) Remove fuel injectors.

(12) Repeat for remaining injectors.

(13) Check injector O-ring for damage. If O-ring is damaged, it must be replaced. Replace the injector clip if it is damaged.

INSTALLATION

INSTALLATION - 4 CYLINDER

(1) Before installing an injector the rubber O-ring must be lubricated with a drop of clean engine oil to aid in installation.

(2) Install injector clip by sliding open end into the top slot of the injector. The edge of the receiver cup will slide into the side slots of clip.

(3) Install injector top end into fuel rail receiver cap. Be careful not to damage O-ring during installation (Fig. 14).

(4) Repeat steps for remaining injectors.

(5) Install the fuel rail, refer to the Fuel Rail Installation in this section.

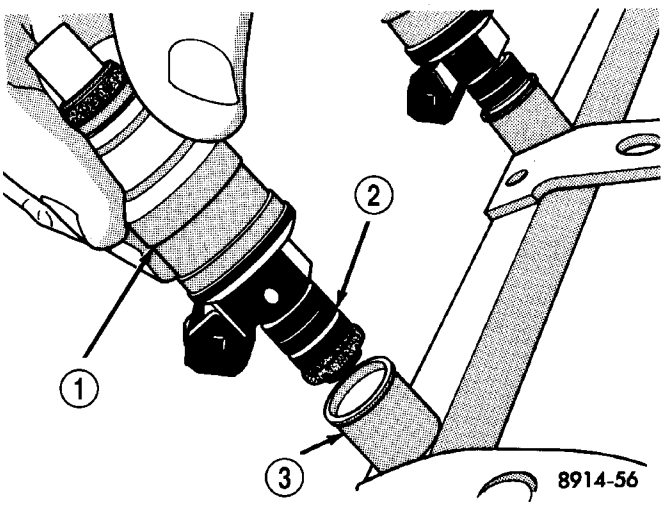

Fig. 14 SERVICING FUEL INJECTOR TYPICAL

1 - FUEL INJECTOR
2 - LOCKING SLOT
3 - FUEL RAIL RECEIVER CUP

INSTALLATION - 2.7L

(1) Lightly lubricate the fuel injector O-rings with a couple drops of clean engine oil.

(2) Install fuel injectors.

(3) Install retaining clips on fuel injectors.

(4) Push injectors into fuel injector rail until clips are in the correct position.

(5) Position fuel rail over cylinder head, and push rail into place. Tighten fuel rail mounting bolts to 11 N·m (100 in. lbs.) torque.

(6) Connect fuel supply tube quick connect fittings at the rear of intake manifold. Refer to Quick Connect Fittings in the Fuel Delivery Section.

(7) Connect electrical connectors to fuel injectors.

(8) Install intake manifold plenum. Refer to the Engine section for information.

(9) Connect negative cable to battery.

FUEL PUMP RELAY

DESCRIPTION

The fuel pump relay is located in the PDC. The inside top of the PDC cover has a label showing relay and fuse location.

OPERATION

The fuel pump relay supplies battery voltage to the fuel pump. A buss bar in the Power Distribution Center (PDC) supplies voltage to the solenoid side and contact side of the relay. The fuel pump relay power circuit contains a fuse between the buss bar in the PDC and the relay. The fuse is located in the PDC. Refer to the Wiring Diagrams for circuit information.

The PCM controls the fuel pump relay by switching the ground path for the solenoid side of the relay on and off. The PCM turns the ground path off when the ignition switch is in the Off position. When the ignition switch is in the On position, the PCM energizes the fuel pump. If the crankshaft position sensor does not detect engine rotation, the PCM de-energizes the relay after approximately one second.

IDLE AIR CONTROL MOTOR

DESCRIPTION

The idle air control motor (IAC) attaches to the throttle body (Fig. 15) or (Fig. 16). It is an electric stepper motor on the SBEC vehicles and a linear solenoid valve on the NGC vehicles.

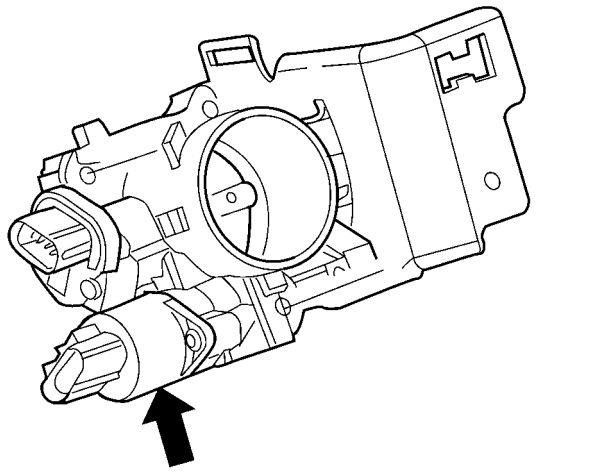

Fig. 15 IAC MOTOR 4 CYLINDER

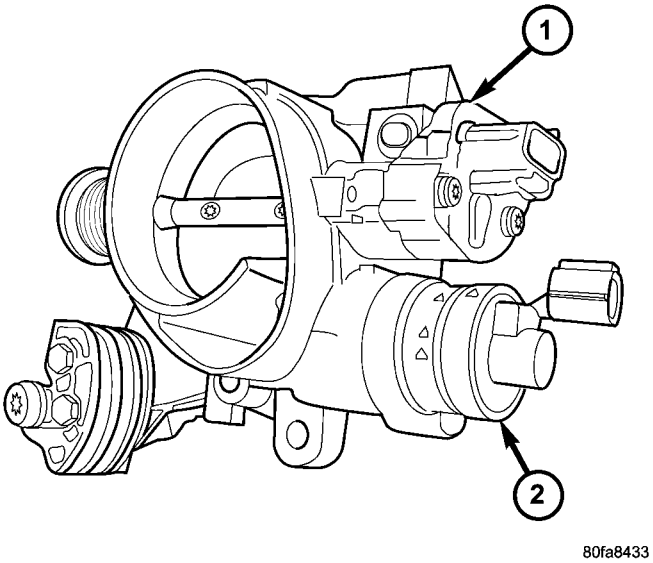

Fig. 16 IDLE AIR CONTROL MOTOR 2.7L

1 - THROTTLE POSITION SENSOR
2 - IDLE AIR CONTROL MOTOR

OPERATION

The PCM adjusts engine idle speed through the idle air control motor to compensate for engine load, coolant temperature or barometric pressure changes.

The throttle body has an air bypass passage that provides air for the engine during closed throttle idle. The idle air control motor pintle protrudes into the air bypass passage and regulates air flow through it.

The PCM adjusts engine idle speed by moving the IAC motor pintle in and out of the bypass passage. The adjustments are based on inputs the PCM receives. The inputs are from the throttle position sensor, crankshaft position sensor, coolant temperature sensor, MAP sensor, vehicle speed sensor and various switch operations (brake, park/neutral, air conditioning).

When engine rpm is above idle speed, the IAC is used for the following functions:

- Off-idle dashpot
- Deceleration air flow control
- A/C compressor load control (also opens the passage slightly before the compressor is engaged so that the engine rpm does not dip down when the compressor engages)

Target Idle

Target idle is determined by the following inputs:

- Gear position
- ECT Sensor
- Battery voltage
- Ambient/Battery Temperature Sensor
- VSS
- TPS
- MAP Sensor

IDLE AIR CONTROL MOTOR (Continued)

REMOVAL

REMOVAL - 4 CYLINDER

When servicing throttle body components, always reassemble components with new O-rings and seals where applicable. Never use lubricants on O-rings or seals, damage may result.

(1) Disconnect negative cable from battery.

(2) Remove electrical connector from idle air control valve.

(3) Remove idle air control valve mounting screws (Fig. 15).

(4) Remove motor from throttle body. Ensure the O-ring is removed with the valve.

REMOVAL - 2.7L

(1) Disconnect the negative battery cable.

(2) Disconnect the IAC electrical connector (Fig. 17).

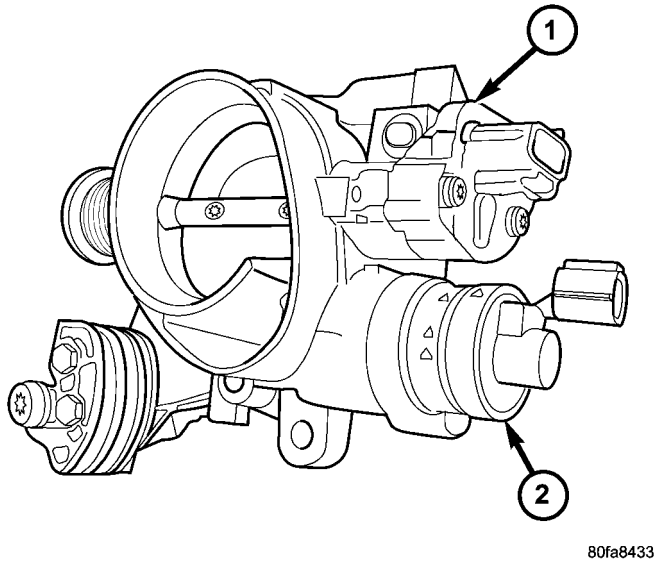

Fig. 17 Idle Air Control Motor

1 - THROTTLE POSITION SENSOR
2 - IDLE AIR CONTROL MOTOR

(3) Remove the IAC mounting screw.

(4) Remove the IAC.

INSTALLATION

INSTALLATION - 4 CYLINDER

When servicing throttle body components, always reassemble components with new O-rings (Fig. 18) and seals where applicable.

(1) The new idle air control motor has a new O-ring installed on it.

(2) Carefully place idle air control valve into throttle body (Fig. 15).

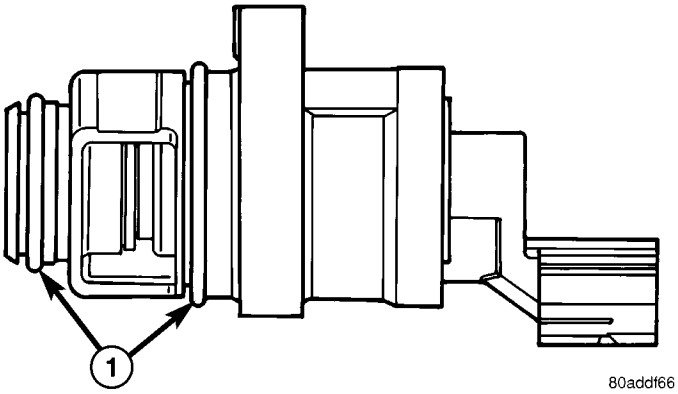

Fig. 18 O-RINGS

1 - O-rings

(3) Install mounting screw. Tighten screw to 4.5 N·m (40 in. lbs.) torque.

(4) Connect electrical connector to idle air control valve

(5) Connect negative cable to battery.

INSTALLATION - 2.7L

(1) Install the IAC to the throttle body (Fig. 17).

(2) Tighten mounting screws to 5.1 N·m (45 in. lbs.) torque.

(3) Attach electrical connector to the IAC.

(4) Connect the negative battery cable.

INLET AIR TEMPERATURE SENSOR

DESCRIPTION

The IAT Sensor is a Negative Temperature Coefficient (NTC) Sensor that provides information to the PCM regarding the temperature of the air entering the intake manifold (Fig. 19).

OPERATION

Inlet/Intake Air Temperature (NGC)

The Intake Air Temperature (IAT) sensor value is used by the PCM to determine air density.

The PCM uses this information to calculate:

- Injector pulse width
- Adjustment of ignition timing (to prevent spark knock at high intake air temperatures)

Battery Temperature (SBEC Vehicles without Battery Temperature sensor)

The inlet air temperature sensor replaces the intake air temperature sensor and the battery temperature sensor. The PCM uses the information from the inlet air temperature sensor to determine values

INLET AIR TEMPERATURE SENSOR (Continued)

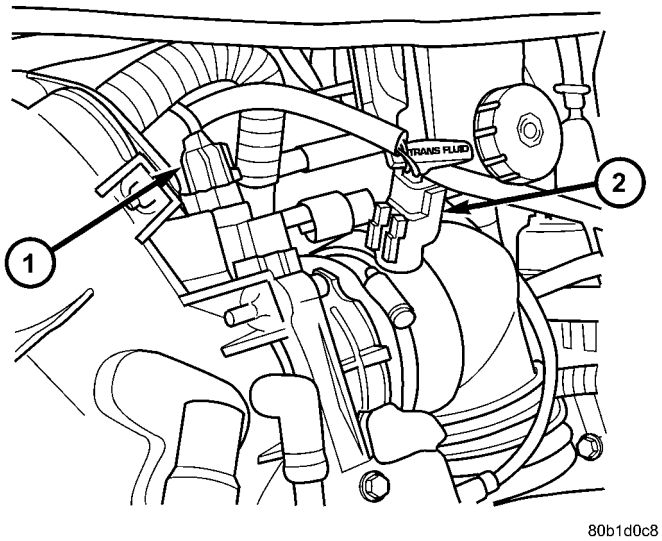

Fig. 19 TPS AND INLET AIR TEMP. SENSOR 2.7L

1 - Throttle Position Sensor
2 - Inlet Air Temperature Sensor

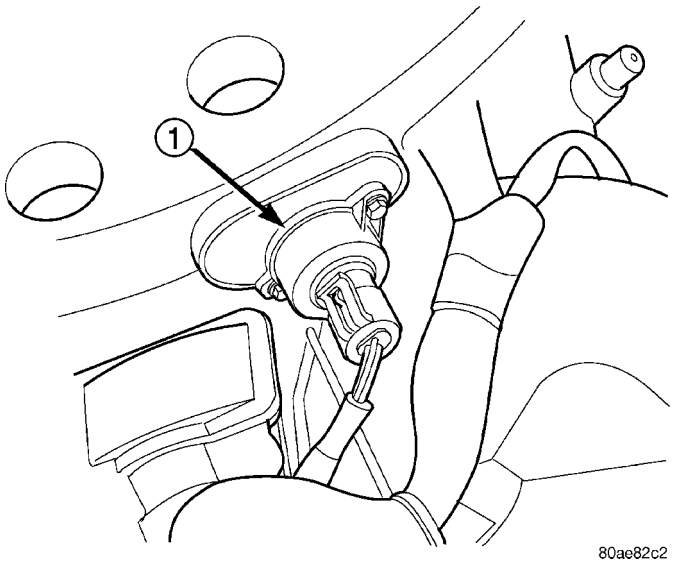

Fig. 20 MAP Sensor 2.7L

1 - MAP SENSOR

for the PCM to use as an intake air temperature sensor and a battery temperature sensor.

The battery temperature information along with data from monitored line voltage (B+), is used by the PCM to vary the battery charging rate. System voltage will be higher at colder temperatures and is gradually reduced at warmer temperatures.

The battery temperature information is also used for OBD II diagnostics. Certain faults and OBD II monitors are either enabled or disabled depending upon the battery temperature sensor input (example: disable purge, enable LDP). Most OBD II monitors are disabled below 20°F.

MAP SENSOR

DESCRIPTION

The MAP sensor mounts to the driver side of the intake manifold plenum (Fig. 20) or (Fig. 21).

OPERATION

The MAP serves as a PCM input, using a silicon based sensing unit, to provide data on the manifold vacuum that draws the air/fuel mixture into the combustion chamber. The PCM requires this information to determine injector pulse width and spark advance. When MAP equals Barometric pressure, the pulse width will be at maximum.

Also like the cam and crank sensors, a 5 volt reference is supplied from the PCM and returns a voltage signal to the PCM that reflects manifold pressure. The zero pressure reading is 0.5V and full scale is 4.5V. For a pressure swing of 0 — 15 psi the voltage changes 4.0V. The sensor is supplied a regulated 4.8 to 5.1 volts to operate the sensor. Like the cam and crank sensors ground is provided through the sensor return circuit.

The MAP sensor input is the number one contributor to pulse width. The most important function of the MAP sensor is to determine barometric pressure. The PCM needs to know if the vehicle is at sea level or is it in Denver at 5000 feet above sea level, because the air density changes with altitude. It will also help to correct for varying weather conditions. If a hurricane was coming through the pressure would be very, very low or there could be a real fair weather, high pressure area. This is important because as air pressure changes the barometric pressure changes. Barometric pressure and altitude have a direct inverse correlation, as altitude goes up barometric pressure goes down. The first thing that happens as the ignition key is rolled on, before reaching the crank position, the PCM powers up, and looks at the MAP voltage, and based upon the voltage it sees, it knows the current barometric pressure relative to altitude. Once the engine starts, the PCM looks at the voltage again, continuously every 12 milliseconds, and compares the current voltage to what it was at key on. The difference between current and what it was at key on is manifold vacuum.

During key On (engine not running) the sensor reads (updates) barometric pressure. A normal range can be obtained by monitoring known good sensor in your work area.

As the altitude increases the air becomes thinner (less oxygen). If a vehicle is started and driven to a very different altitude than where it was at key On the barometric pressure needs to be updated. Any

MAP SENSOR (Continued)

time the PCM sees Wide Open throttle, based upon TPS angle and RPM it will update barometric pressure in the MAP memory cell. With periodic updates, the PCM can make its calculations more effectively.

The PCM uses the MAP sensor to aid in calculating the following:

- Barometric pressure
- Engine load
- Manifold pressure
- Injector pulse-width
- Spark-advance programs
- Idle speed
- Decel fuel shutoff

The MAP sensor signal is provided from a single piezoresistive element located in the center of a diaphragm. The element and diaphragm are both made of silicone. As the pressures changes the diaphragm moves causing the element to deflect which stresses the silicone. When silicone is exposed to stress its resistance changes. As manifold vacuum increases, the MAP sensor input voltage decreases proportionally. The sensor also contains electronics that condition the signal and provide temperature compensation.

The PCM recognizes a decrease in manifold pressure by monitoring a decrease in voltage from the reading stored in the barometric pressure memory cell. The MAP sensor is a linear sensor; as pressure changes, voltage changes proportionately. The range of voltage output from the sensor is usually between 4.5 volts at sea level to as low as 0.3 volts at 26 in. of Hg. Barometric pressure is the pressure exerted by the atmosphere upon an object. At sea level on a standard day, no storm, barometric pressure is 29.92 in Hg. For every 100 feet of altitude barometric pressure drops .10 in. Hg. If a storm goes through it can either add, high pressure, or decrease, low pressure, from what should be present for that altitude.You should make a habit of knowing what the average pressure and corresponding barometric pressure is for your area. Always use the Diagnostic Test Procedures Manual for MAP sensor testing.

REMOVAL

REMOVAL - 4 CYLINDER

(1) Disconnect the negative battery cable.

(2) Disconnect electrical connector from MAP sensor (Fig. 21).

(3) Remove two screws holding sensor to the intake manifold.

REMOVAL - 2.7L

(1) Remove the negative battery cable.

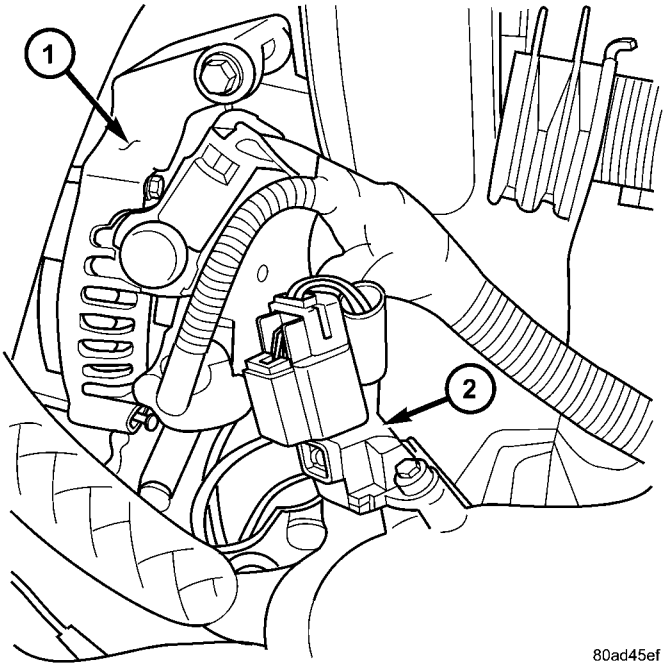

Fig. 21 GENERATOR AND MAP SENSOR

1 - Generator
2 - MAP Sensor

(2) Disconnect the electrical connector from the MAP sensor (Fig. 22).

(3) Remove bolt from sensor.

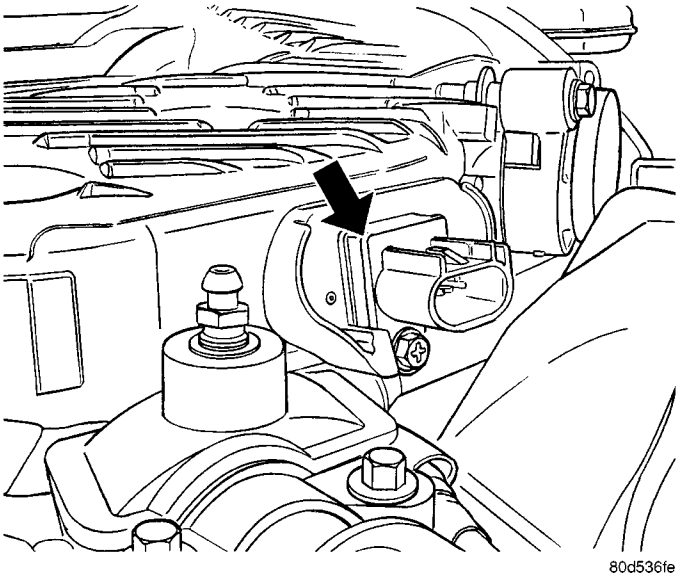

Fig. 22 MAP SENSOR - 2.7L

(4) Remove sensor.

MAP SENSOR (Continued)

INSTALLATION

INSTALLATION - 4 CYLINDER

(1) Install sensor.
(2) Install two screws and tighten.
(3) Connect the electrical connector to the MAP sensor (Fig. 21).
(4) Connect the negative battery cable.

INSTALLATION - 2.7L

(1) The sensor mounts onto intake manifold plenum (Fig. 23). Tighten screws to 4.5 N·m (40 in. lbs.) torque.

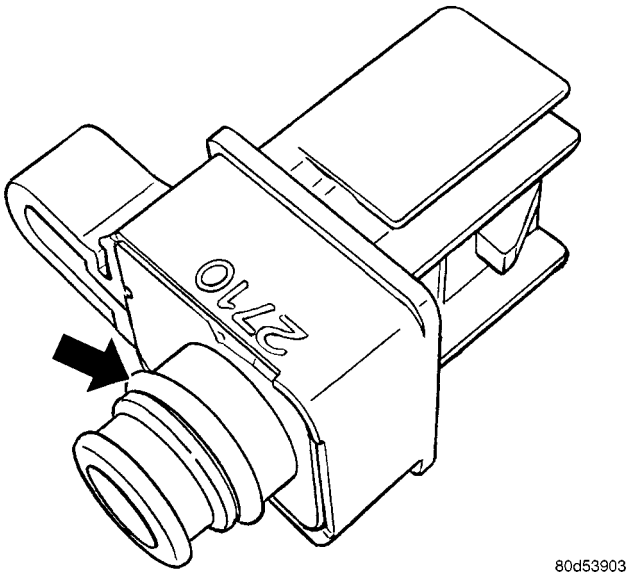

Fig. 23 MAP SENSOR O-RING

(2) Attach electrical connector to sensor (Fig. 22).
(3) Install the negative battery cable.

O2 SENSOR

DESCRIPTION

The upstream oxygen sensor threads into the outlet flange of the exhaust manifold (Fig. 24) or (Fig. 25).

The downstream heated oxygen sensor threads into the outlet pipe at the rear of the catalytic convertor (Fig. 26).

OPERATION

For SBEC vehicles a single sensor ground is used for all 4 O2 sensors (6 Cyl.). A seperate upstream and downstream grounds are used on the NGC vehicles (4 Cyl.).

As vehicles accumulate mileage, the catalytic convertor deteriorates. The deterioration results in a less efficient catalyst. To monitor catalytic convertor deterioration, the fuel injection system uses two heated oxygen sensors. One sensor upstream of the catalytic convertor, one downstream of the convertor. The PCM compares the reading from the sensors to calculate the catalytic convertor oxygen storage capacity and converter efficiency. Also, the PCM uses the upstream heated oxygen sensor input when adjusting injector pulse width.

When the catalytic converter efficiency drops below emission standards, the PCM stores a diagnostic trouble code and illuminates the malfunction indicator lamp (MIL).

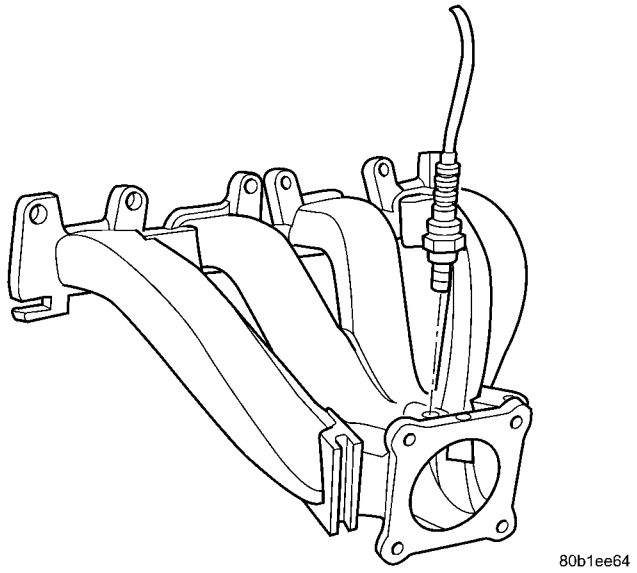

Fig. 24 O2 SENSOR UPSTREAM 1/1 4 CYLINDER

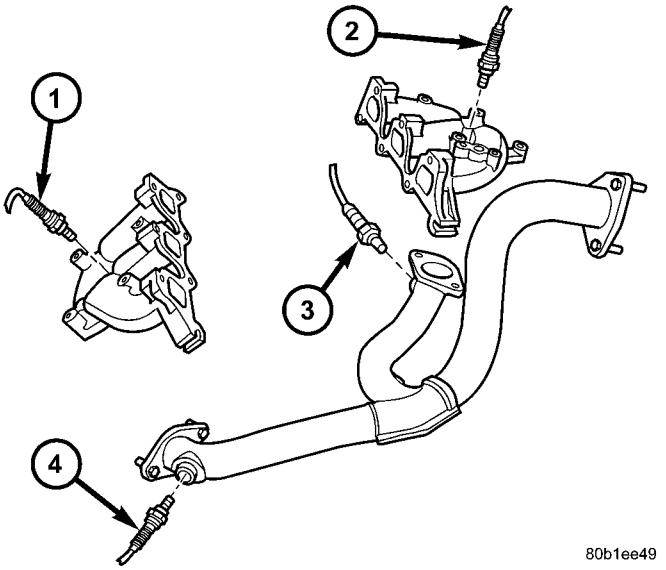

Fig. 25 O2 SENSORS 2.7L

1 - Upstream 2/1
2 - Upstream 1/1
3 - Downstream 1/2
4 - Downstream 2/2

O2 SENSOR (Continued)

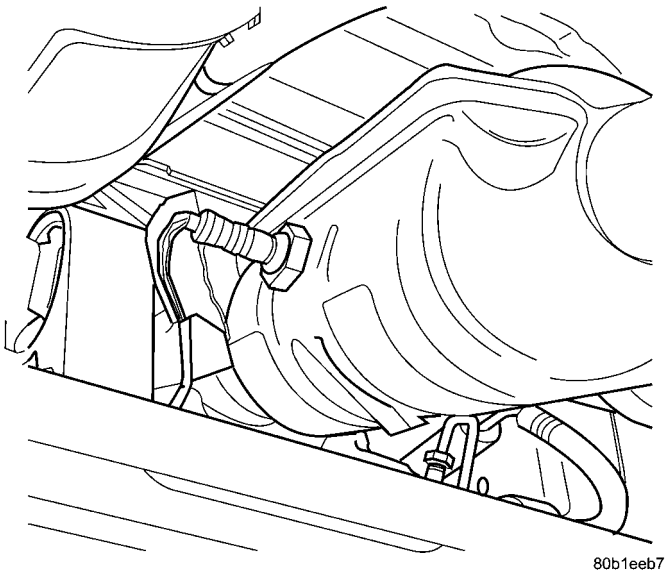

Fig. 26 O2 SENSOR DOWNSTREAM 2/1 4 CYLINDER

The O2 sensors produce voltages from 0 to 1 volt (this voltage is offset by a constant 2.5 volts on NGC vehicles), depending upon the oxygen content of the exhaust gas. When a large amount of oxygen is present (caused by a lean air/fuel mixture, can be caused by misfire and exhaust leaks), the sensors produces a low voltage. When there is a lesser amount of oxygen present (caused by a rich air/fuel mixture, can be caused by internal engine problems) it produces a higher voltage. By monitoring the oxygen content and converting it to electrical voltage, the sensors act as a rich-lean switch.

The oxygen sensors are equipped with a heating element that keeps the sensors at proper operating temperature during all operating modes. Maintaining correct sensor temperature at all times allows the system to enter into closed loop operation sooner. Also, it allows the system to remain in closed loop operation during periods of extended idle.

In Closed Loop operation the PCM monitors the O2 sensors input (along with other inputs) and adjusts the injector pulse width accordingly. During Open Loop operation the PCM ignores the O2 sensor input. The PCM adjusts injector pulse width based on preprogrammed (fixed) values and inputs from other sensors.

1.6L Siemens controller and SBEC controller - The Automatic Shutdown (ASD) relay supplies battery voltage to both the upstream and downstream heated oxygen sensors. The oxygen sensors are equipped with a heating element. The heating elements reduce the time required for the sensors to reach operating temperature. The PCM uses pulse width modulation to control the ground side of the heater to regulate the temperature on 4 cyl. upstream O2 heater only.

NGC Controller - Has a common ground for the heater in the O2S. 12 volts is supplied to the heater in the O2S by the NGC controller. Both the upstream and downstream O2 sensors for NGC are pulse width modulation (PWM).

UPSTREAM OXYGEN SENSOR

The input from the upstream heated oxygen sensor tells the PCM the oxygen content of the exhaust gas. Based on this input, the PCM fine tunes the air-fuel ratio by adjusting injector pulse width.

The sensor input switches from 0 to 1 volt, depending upon the oxygen content of the exhaust gas in the exhaust manifold (this is offset by 2.5 voltage on NGC vehicles). When a large amount of oxygen is present (caused by a lean air-fuel mixture), the sensor produces voltage as low as 0.1 volt. When there is a lesser amount of oxygen present (rich air-fuel mixture) the sensor produces a voltage as high as 1.0 volt. By monitoring the oxygen content and converting it to electrical voltage, the sensor acts as a rich-lean switch.

The heating element in the sensor provides heat to the sensor ceramic element. Heating the sensor allows the system to enter into closed loop operation sooner. Also, it allows the system to remain in closed loop operation during periods of extended idle.

In Closed Loop, the PCM adjusts injector pulse width based on the upstream heated oxygen sensor input along with other inputs. In Open Loop, the PCM adjusts injector pulse width based on preprogrammed (fixed) values and inputs from other sensors.

DOWNSTREAM OXYGEN SENSOR

The downstream heated oxygen sensor input is used to detect catalytic convertor deterioration. As the convertor deteriorates, the input from the downstream sensor begins to match the upstream sensor input except for a slight time delay. By comparing the downstream heated oxygen sensor input to the input from the upstream sensor, the PCM calculates catalytic convertor efficiency. Also used to establish the upstream O2 goal voltage (switching point).

REMOVAL

REMOVAL - DOWNSTREAM 1/2 4 CYLINDER

The O2S is located in the side of the catalytic converter (Fig. 26).

WARNING: THE EXHAUST MANIFOLD, EXHAUST PIPES AND CATALYTIC CONVERTER BECOME VERY HOT DURING ENGINE OPERATION. ALLOW ENGINE TO COOL BEFORE REMOVING OXYGEN SENSOR.

O2 SENSOR (Continued)

(1) Remove the negative battery cable.
(2) Raise and support the vehicle.
(3) Disconnect the wire connector from the O2S.

CAUTION: When disconnecting the sensor electrical connector, do not pull directly on wire going into sensor.

(4) Remove the O2S. Snap-On oxygen sensor wrench (number YA 8875) may be used for removal and installation.

REMOVAL - Downstream 1/2, 2/2 2.7L

The O2S are located at the outlet ends of the catalytic converter (Fig. 25).

WARNING: THE EXHAUST MANIFOLD, EXHAUST PIPES AND CATALYTIC CONVERTER BECOME VERY HOT DURING ENGINE OPERATION. ALLOW ENGINE TO COOL BEFORE REMOVING OXYGEN SENSOR.

(1) Remove the negative battery cable.
(2) Raise and support the vehicle.
(3) Disconnect the wire connector from the O2S.

CAUTION: When disconnecting the sensor electrical connector, do not pull directly on wire going into sensor.

(4) Remove the O2S. Snap-On oxygen sensor wrench (number YA 8875) may be used for removal and installation.

REMOVAL - Upstream 1/1, 2/1 2.7L

The engines uses two heated oxygen sensors, one in each exhaust manifold (Fig. 25).

CAUTION: When disconnecting the sensor electrical connector, do not pull directly on wire going into sensor.

(1) Remove the negative battery cable.
(2) Remove the air cleaner box for the rear O2 sensor.
(3) Disconnect the heated oxygen sensor electrical connector.
(4) Use a Special tool #8439 to remove oxygen sensor.

REMOVAL - UPSTREAM 1/1 4 CYLINDER

The engine uses 1 heated oxygen sensors in the exhaust manifold.

CAUTION: When disconnecting the sensor electrical connector, do not pull directly on wire going into sensor.

(1) Remove the negative battery cable.
(2) Disconnect the heated oxygen sensor electrical connector.
(3) Use a socket such as Snap-On YA8875 or a crow foot wrench to remove oxygen sensor (Fig. 25).

INSTALLATION

INSTALLATION - DOWNSTREAM 1/2 4 CYLINDER

The O2S are located in the side of the catalytic converter (Fig. 26).

(1) After removing the sensor, the exhaust manifold threads must be cleaned with an 18 mm X 1.5 + 6E tap. If reusing the original sensor, coat the sensor threads with an anti-seize compound such as Loctite 771- 64 or equivalent. New sensors have compound on the threads and do not require an additional coating.
(2) Install the O2S. Tighten to 28 N·m (20 ft. lbs.) torque.
(3) Connect the O2S wire connector.
(4) Lower the vehicle.
(5) Install the negative battery cable.

INSTALLATION - Downstream 1/2, 2/2 2.7L

The O2S are located at the outlet ends of the catalytic converter (Fig. 25).

(1) After removing the sensor, the exhaust manifold threads must be cleaned with an 18 mm X 1.5 + 6E tap. If reusing the original sensor, coat the sensor threads with an anti-seize compound such as Loctite 771- 64 or equivalent. New sensors have compound on the threads and do not require an additional coating. Tighten the sensor to 28 N·m (20 ft. lbs.) torque.
(2) Install the O2S. Tighten to 28 N·m (20 ft. lbs.) torque.
(3) Connect the O2S wire connector.
(4) Lower the vehicle.
(5) Install the negative battery cable.

INSTALLATION - Upstream 1/1, 2/1 2.7L

The engines uses two heated oxygen sensors, one in each exhaust manifold (Fig. 25).

(1) After removing the sensor, the exhaust manifold threads must be cleaned with an 18 mm X 1.5 + 6E tap. If reusing the original sensor, coat the sensor threads with an anti-seize compound such as Loctite 771- 64 or equivalent. New sensors have compound on the threads and do not require an additional coating.
(2) Use a Special tool #8439 to install oxygen sensor. Tighten the sensor to 28 N·m (20 ft. lbs.) torque.
(3) Connect the heated oxygen sensor electrical connector.

O2 SENSOR (Continued)

(4) Install the air cleaner box.
(5) Install the negative battery cable.

INSTALLATION - UPSTREAM 1/1 4 CYLINDER

The engines uses 1 heated oxygen sensors in the exhaust manifold.

(1) After removing the sensor, the exhaust manifold threads must be cleaned with an 18 mm X 1.5 + 6E tap. If reusing the original sensor, coat the sensor threads with an anti-seize compound such as Loctite 771- 64 or equivalent. New sensors have compound on the threads and do not require an additional coating. Tighten the sensor to 28 N·m (20 ft. lbs.) torque.

(2) Connect the heated oxygen sensor electrical connector.

(3) Install the negative battery cable.

THROTTLE BODY

DESCRIPTION

The throttle body is located on the intake manifold (Fig. 27). Fuel does not enter the intake manifold through the throttle body. Fuel is sprayed into the manifold by the fuel injectors.

OPERATION

Filtered air from the air cleaner enters the intake manifold through the throttle body. The throttle body contains an air control passage controlled by an Idle Air Control (IAC) motor. The air control passage is used to supply air for idle conditions. A throttle valve (plate) is used to supply air for above idle conditions.

Certain sensors are attached to the throttle body. The accelerator pedal cable, speed control cable and transmission control cable (when equipped) are connected to the throttle body linkage arm.

A (factory adjusted) set screw is used to mechanically limit the position of the throttle body throttle plate. **Never attempt to adjust the engine idle speed using this screw.** All idle speed functions are controlled by the PCM.

REMOVAL

REMOVAL - 4 CYLINDER

(1) Disconnect negative cable from battery cable.
(2) Remove clean air hose (Fig. 27).
(3) Remove the throttle cable shield.
(4) Remove throttle and the speed control (if equipped) cables from lever and bracket.

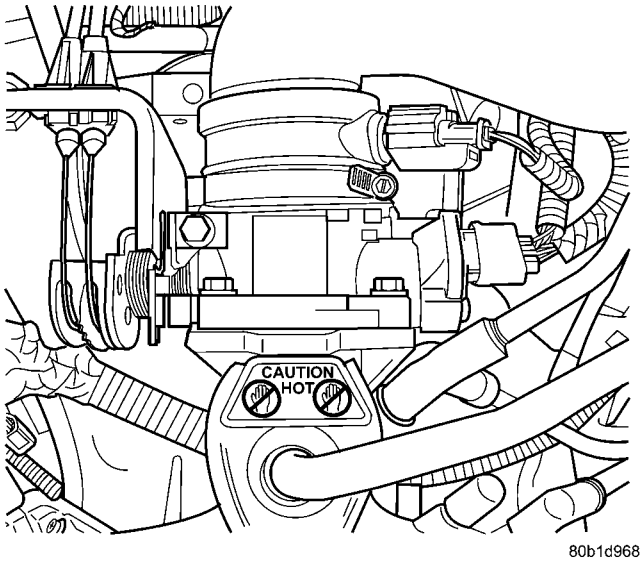

Fig. 27 THROTTLE BODY 4 CYLINDER

(5) Disconnect electrical connectors from the idle air control motor and throttle position sensor (TPS).

(6) Remove throttle body to intake manifold attaching bolts (Fig. 28).

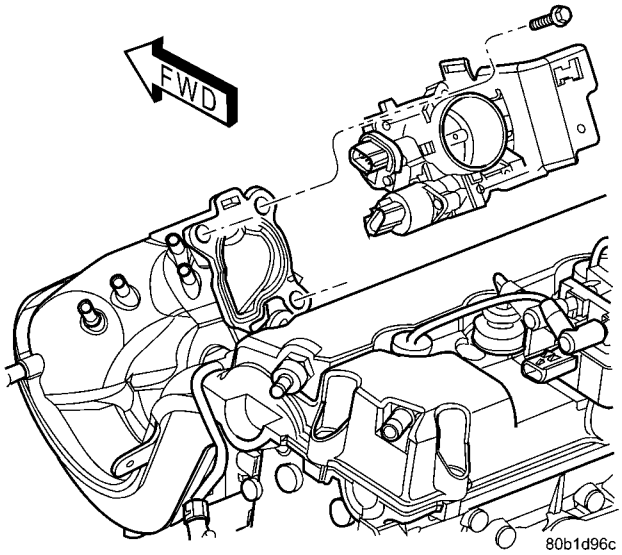

Fig. 28 THROTTLE BODY MOUNTING

(7) Remove the throttle cable bracket (Fig. 29).
(8) Remove throttle body.

THROTTLE BODY (Continued)

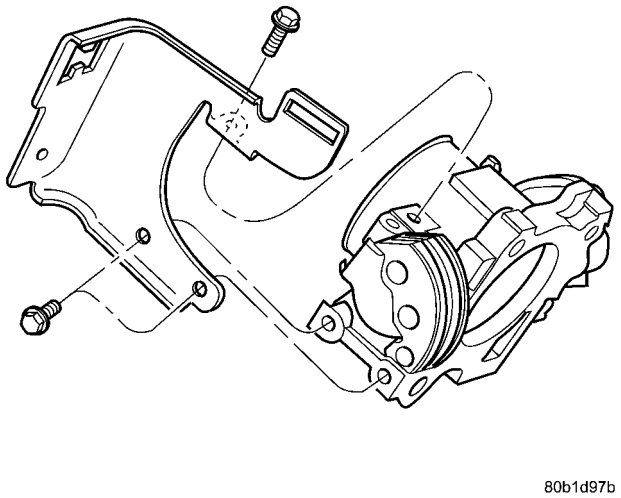

Fig. 29 THROTTLE CABLE BRACKET

REMOVAL - 2.7L

(1) Disconnect negative cable from battery

(2) Disconnect electrical connectors from throttle body (Fig. 30).

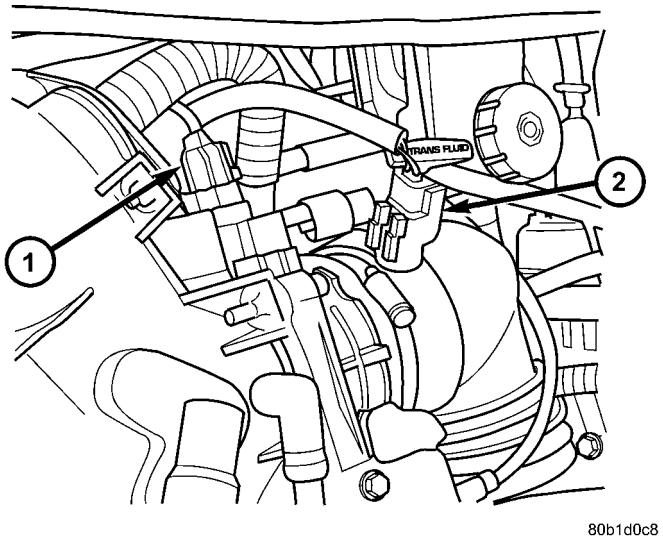

Fig. 30 TPS AND INLET AIR TEMP. SENSOR 2.7L

1 - Throttle Position Sensor
2 - Inlet Air Temperature Sensor

(3) Disconnect clean air hose from throttle body.

(4) Remove the throttle cable shield (Fig. 31).

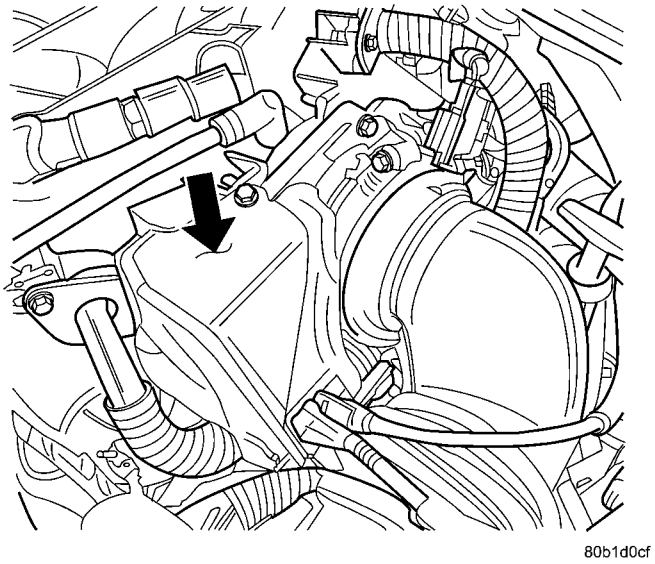

Fig. 31 THROTTLE SHIELD 2.7L

(5) Hold throttle lever in wide open position. Remove throttle cable and speed control cables from throttle arm (Fig. 32).

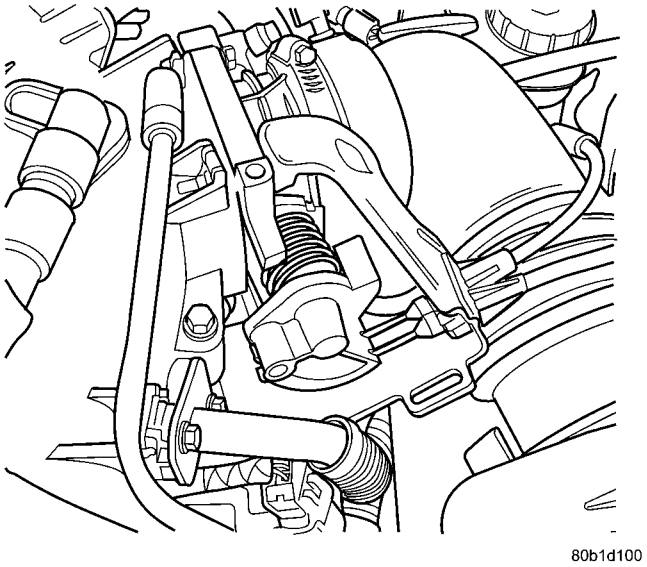

Fig. 32 THROTTLE CABLES 2.7L

(6) Remove throttle cable bracket.

THROTTLE BODY (Continued)

(7) Remove the throttle body support bracket from the bottom of the throttle body (Fig. 33).

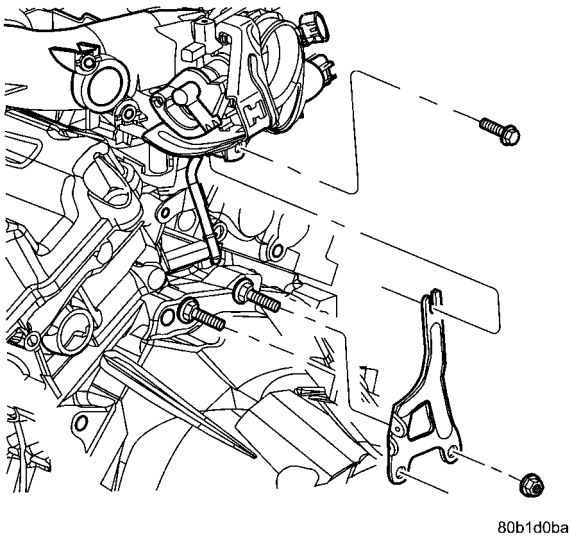

Fig. 33 THROTTLE BODY SUPPORT BRACKET 2.7L

(8) Remove remaining 2 throttle body bolts (Fig. 34).

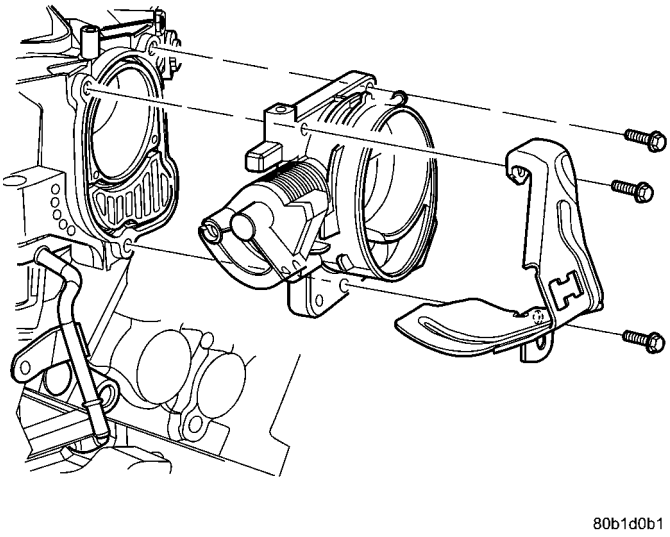

Fig. 34 THROTTLE BODY 2.7L

(9) Remove throttle body.
(10) Clean mating surfaces.

INSTALLATION

INSTALLATION - 4 CYLINDER

(1) Install throttle body (Fig. 28).
(2) Tighten throttle body mounting bolts to 13.6 N·m (120 in. lbs.) torque.
(3) Install the throttle cable bracket (Fig. 29). Tighten throttle cable bracket mounting bolts to 14.1 N·m (125 in. lbs.) torque
(4) Hold throttle lever in the wide open throttle position and install the throttle and speed control cables (if equipped).
(5) Connect electrical connectors to the idle air control motor and throttle position sensor (TPS).
(6) Install the throttle cable shield.
(7) Install clean air hose to throttle body (Fig. 27).
(8) Connect negative cable to battery cable.

INSTALLATION - 2.7L

(1) Loose install 2 throttle body bolts (Fig. 34) (upper right and lower bolt).
(2) Install the throttle cable bracket.
(3) Install the third throttle body bolt and the throttle body support bracket to the bottom of the throttle body (Fig. 33). Tighten the lower support bracket bolts to 31.1 N·m (23 ft. lbs.) torque.
(4) Tighten throttle body bolts to 13.6 N·m (120 in. lbs.) torque.
(5) Hold throttle lever in wide open throttle position. Install throttle cable and speed control cable (Fig. 32).
(6) Install the throttle cable shield (Fig. 31).
(7) Connect electrical connectors to throttle body (Fig. 30).
(8) Install clean air hose to throttle body.
(9) Connect negative cable to battery.

THROTTLE CONTROL CABLE

REMOVAL

(1) Working from the engine compartment, hold the throttle body throttle lever in the wide open position.
(2) Remove the throttle cable from the throttle body cam (Fig. 35) or (Fig. 36).
(3) From inside the vehicle, hold up the pedal and remove the pedal retainer and throttle cable from the upper end of the pedal lever.

THROTTLE CONTROL CABLE (Continued)

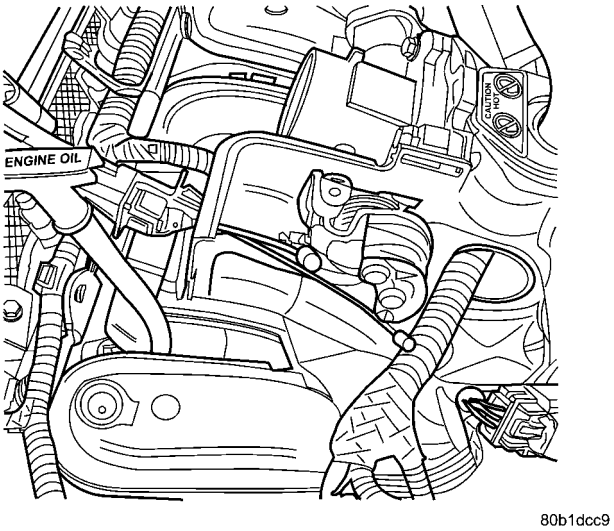

Fig. 35 THROTTLE CABLE 4 CYLINDER

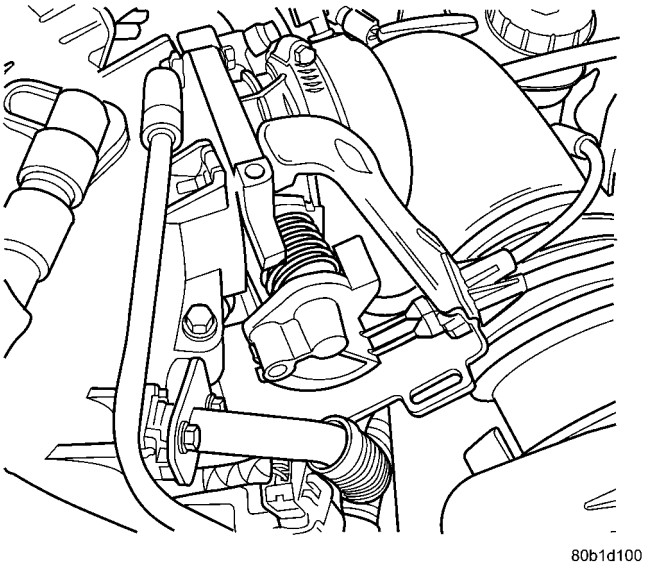

Fig. 36 THROTTLE CABLE 2.7L

(4) Remove retainer clip from throttle cable and grommet at dash panel (Fig. 37).

(5) From the engine compartment, pull the throttle cable out of the dash panel grommet. Then remove grommet and cable from dash panel.

(6) Remove the throttle cable from throttle bracket by carefully compressing both retaining ears simultaneously. Then gently pull the throttle cable from throttle bracket.

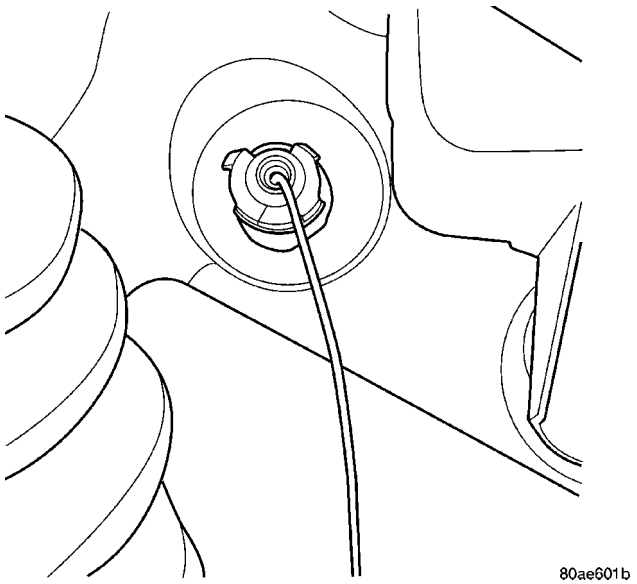

Fig. 37 RETAINER CLIP

(7) On 4 cylinder engines remove throttle cable from routing clip on fuel rail, and routing clip on left front shocktower (Fig. 38).

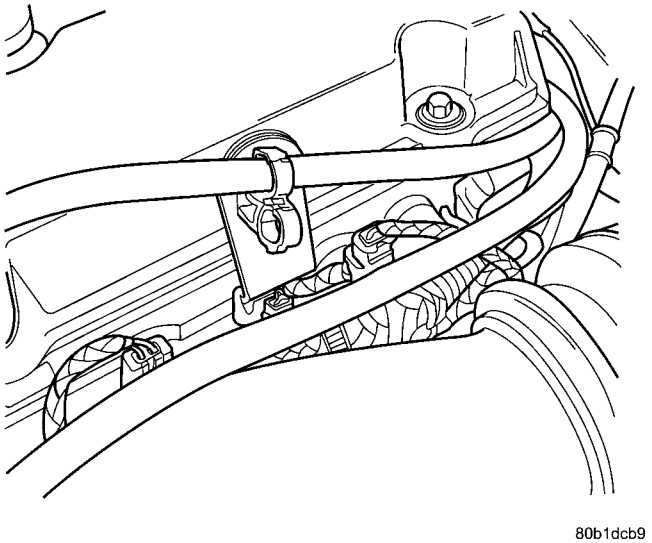

Fig. 38 THROTTLE CABLE BRACKET 4 CYLINDER

THROTTLE CONTROL CABLE (Continued)

INSTALLATION

(1) From the engine compartment, push the pedal end fitting through the dash panel, seat the grommet, then push the cable dash fitting into the gromment.

(2) Install the cable's throttle body end-fitting into the cable mounting bracket on the engine.

(3) On 4 cylinder engines install throttle cable routing clip to bracket on fuel rail (Fig. 38), and other clip to the shocktower.

(4) From inside the vehicle, hold up the pedal and install throttle cable and pedal retainer in the upper end of the pedal lever.

(5) At the dash panel, install the cable retainer clip between the end of the throttle cable dash fitting and grommet (Fig. 37).

(6) From the engine compartment, rotate the throttle lever wide open and install the throttle cable (Fig. 35) or (Fig. 36).

THROTTLE POSITION SENSOR

DESCRIPTION

The throttle position sensor mounts to the side of the throttle body.

The Throttle Position Sensor (TPS) connects to the throttle blade shaft. The TPS is a variable resistor (potentiometer) that provides the PCM with an input signal (voltage). The signal represents throttle blade position. As the position of the throttle blade changes, the resistance of the TPS changes.

OPERATION

The signal represents throttle blade position. As the position of the throttle blade changes, the resistance of the TPS changes.

The PCM supplies approximately 5 volts to the TPS. The TPS output voltage (input signal to the powertrain control module) represents throttle blade position. The TPS output voltage to the PCM varies from approximately 0.6 volt at minimum throttle opening (idle) to a maximum of 4.5 volts at wide open throttle.

Along with inputs from other sensors, the PCM uses the TPS input to determine current engine operating conditions. The PCM also adjusts fuel injector pulse width and ignition timing based on these inputs.

REMOVAL

REMOVAL - 4 CYLINDER

(1) Disconnect the negative battery cable.

(2) Disconnect the electrical connector to throttle position sensor.

(3) Remove the 2 screws for the throttle position sensor.

(4) Remove the throttle position sensor.

REMOVAL - 2.7L

(1) Remove the negative battery cable.

(2) Remove the throttle body (Refer to 14 - FUEL SYSTEM/FUEL INJECTION/THROTTLE BODY - REMOVAL)

(3) Remove the TPS mounting screws (Fig. 39).

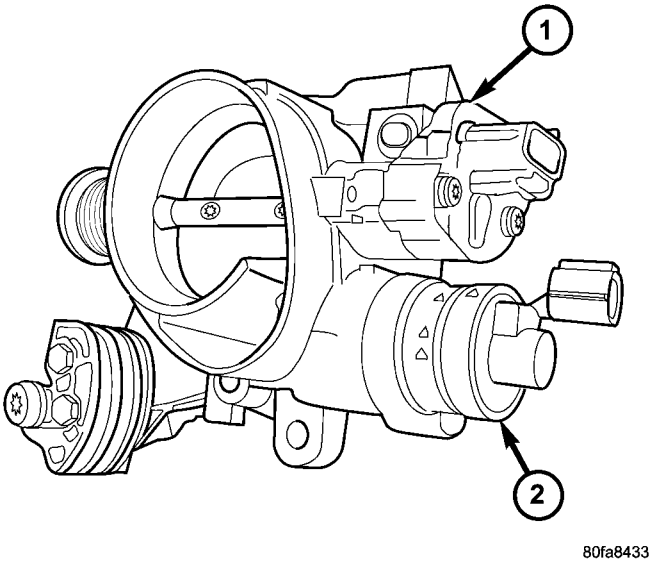

Fig. 39 Idle Air Control Motor and Throttle Position Sensor

1 - THROTTLE POSITION SENSOR
2 - IDLE AIR CONTROL MOTOR

(4) Remove the TPS.

THROTTLE POSITION SENSOR (Continued)

INSTALLATION

INSTALLATION - 4 CYLINDER

(1) The throttle shaft end of the throttle body slides into a socket in the TPS. The socket has two tabs inside it. The throttle shaft rests against the tabs. When indexed correctly, the TPS can rotate clockwise a few degrees to line up the mounting screw holes with the screw holes in the throttle body. The TPS has slight tension when rotated into position. If it is difficult to rotate the TPS into position, install the sensor with the throttle shaft on the other side of the tabs in the socket. Tighten mounting screws to 5.1 N·m (45 in. lbs.) torque.

(2) After installing the TPS, the throttle plate should be closed. If the throttle plate is open, install the sensor on the other side of the tabs in the socket.

(3) Attach electrical connector to the TPS.

(4) Install the negative battery cable.

INSTALLATION - 2.7L

(1) The throttle shaft end of the throttle body slides into a socket in the TPS. The socket has two tabs inside it. The throttle shaft rests against the tabs. When indexed correctly, the TPS can rotate clockwise a few degrees to line up the mounting screw holes with the screw holes in the throttle body. The TPS has slight tension when rotated into position. If it is difficult to rotate the TPS into position, install the sensor with the throttle shaft on the other side of the tabs in the socket. Tighten mounting screws to 5.1 N·m (45 in. lbs.) torque.

(2) After installing the TPS, the throttle plate should be closed. If the throttle plate is open, install the sensor on the other side of the tabs in the socket.

(3) Install the throttle body (Refer to 14 - FUEL SYSTEM/FUEL INJECTION/THROTTLE BODY - INSTALLATION).

(4) Connect the negative battery cable.

STEERING

TABLE OF CONTENTS

page

STEERING
DESCRIPTION 1
OPERATION 1
WARNING 1
CAUTION 1
DIAGNOSIS AND TESTING
DIAGNOSIS AND TESTING - POWER STEERING FLOW AND PRESSURE TEST 2
DIAGNOSIS AND TESTING - STEERING SYSTEM DIAGNOSIS CHARTS 3
SPECIFICATIONS
POWER STEERING FASTENER TORQUE . . . 8
SPECIAL TOOLS
POWER STEERING 9
COLUMN 10
GEAR 21
PUMP 29

STEERING

DESCRIPTION

This vehicle is equipped with power steering. The power steering system consists of these major components:

- POWER STEERING PUMP
- POWER STEERING GEAR
- POWER STEERING FLUID RESERVOIR
- POWER STEERING FLUID SUPPLY HOSE
- POWER STEERING FLUID PRESSURE HOSE
- POWER STEERING FLUID RETURN HOSE

For information on the first two components, refer to their respective sections within this service manual group. Information on the hoses can be found in POWER STEERING PUMP.

OPERATION

Turning of the steering wheel is converted into linear travel through the meshing of the helical pinion teeth with the rack teeth. Power assist steering is provided by an open center, rotary type control valve. It is used to direct oil from the power steering pump to either side of the integral steering rack piston.

Road feel is controlled by the diameter of a torsion bar which initially steers the vehicle. As steering effort increases as in a turn, the torsion bar twists, causing relative rotary motion between the rotary valve body and valve spool. This movement directs oil behind the integral rack piston, which in turn builds up hydraulic pressure and assists in the turning effort.

WARNING

WARNING: POWER STEERING FLUID, ENGINE COMPONENTS AND EXHAUST SYSTEM MAY BE EXTREMELY HOT IF ENGINE HAS BEEN RUNNING. DO NOT START ENGINE WITH ANY LOOSE OR DISCONNECTED HOSES OR DRIVE BELTS. DO NOT ALLOW HOSES TO TOUCH HOT EXHAUST MANIFOLD OR CATALYST.

CAUTION

CAUTION: During repair procedures requiring the power steering fluid hoses to be disconnected, cap all open ends of the hose connections. This will prevent the entry of foreign material into the components while the power steering hoses are disconnected.

STEERING (Continued)

DIAGNOSIS AND TESTING

DIAGNOSIS AND TESTING - POWER STEERING FLOW AND PRESSURE TEST

The following procedure is to be used to test the operation of the power steering system on this vehicle. This test will provide the flow rate of the power steering pump along with the maximum relief pressure. This test is to be performed any time a power steering system problem is present to determine if the power steering pump or power steering gear is not functioning properly. The following flow and pressure test is performed using the Power Steering Analyzer Kit, Special Tool 6815 (Fig. 1), hoses, Special Tools 6905 and 6959, adapters, Special Tool's 6972 and 8354, and fittings from adapter kit, Special Tool 6893.

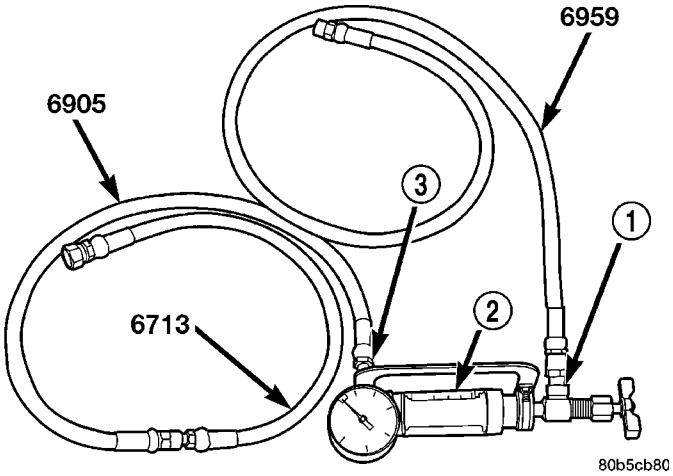

Fig. 1 Power Steering Analyzer With Hoses Installed

1 - OUTLET
2 - SPECIAL TOOL 6815
3 - INLET

(1) Assemble hoses on Power Steering Analyzer, Special Tool 6815, as shown. Install Pressure Hose, Special Tool 6905 (in 6893 kit), in the inlet fitting on Power Steering Analyzer. Install Pressure Hose, Special Tool 6713 (in 6815 kit) on Pressure Hose, Special Tool 6905. Install Pressure Hose, Special Tool 6959, in the outlet fitting on Power Steering Analyzer.

WARNING: To prevent personal injury, safety goggles should be worn at all times when performing any test procedures on the power steering system.

(2) Install the following adapters from Adapter Set, Special Tool 6893 (Fig. 2), on the analyzer hose ends:

- Install Adapter Fitting, Special Tool 6844, on Pressure Hose, Special Tool 6713.
- Install Adapter Fitting, Special Tool 6826, on Pressure Hose, Special Tool 6959.

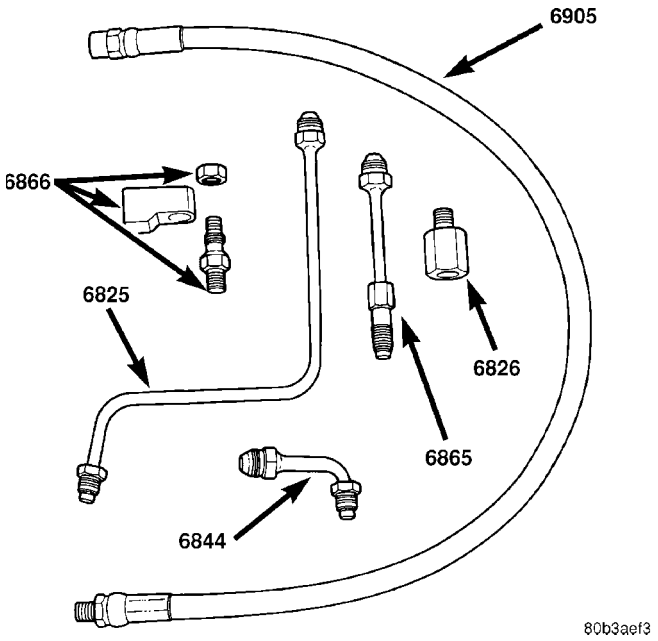

Fig. 2 Power Steering Analyzer Adapters 6893

(3) Disconnect the power steering fluid pressure hose from the power steering pump.

(4) Connect Adapter Fitting, Special Tool 6844, attached to pressure hose from inlet (gauge end) of Power Steering Analyzer to the pressure fitting on the power steering pump.

(5) Connect vehicle power steering fluid pressure hose to Adapter Fitting, Special Tool 6826, which should be already installed in the outlet hose (valve end) of Power Steering Analyzer.

(6) Perform the following test procedure.

TEST PROCEDURE

(1) Check belt tension and adjust as necessary.

(2) Completely open valve on Power Steering Analyzer.

(3) Start engine and let idle long enough to circulate power steering fluid through the analyzer and hoses, until the air is completely bled out of the fluid. Shut off engine.

(4) Check power steering fluid level and add fluid as necessary. Start engine again and let idle.

(5) The analyzer gauge should read below 862 kPa (125 psi). If above, inspect the hoses for restrictions and repair as necessary. The initial pressure should be in the range of 345-552 kPa (50-80 psi). The flow meter should read between 1.3 and 1.6 GPM.

CAUTION: The following test procedure involves testing maximum pump pressure output and flow control valve operation. Do not leave valve closed for more than five seconds as the pump could be damaged.

STEERING (Continued)

(6) Close valve fully three times and record highest pressure indicated each time. **All three readings must be above specifications and within 345 kPa (50 psi) of each other.**

NOTE: Power steering pump maximum relief pressure is 8240 to 8920 kPa (1195 to 1293 psi.).

- Power steering pump pressure's are above specifications, but not within 345 kPa (50 psi) of each other, replace pump.
- Pressure's are within 345 kPa (50 psi) of each other, but below specifications, replace pump.

CAUTION: Do not force the pump to operate against the stops for more than 2 to 4 seconds at a time because pump damage will result.

(7) Completely open the valve on the Power Steering Analyzer. Turn the steering wheel to the extreme left until the stop in the steering gear is met, then turn the steering wheel to the right until the right stop is met. Record the highest indicated pressure at each position. Compare the recorded readings to the specifications. If the highest output pressures are not the same against either stop, the steering gear is leaking internally and must be replaced.

DIAGNOSIS AND TESTING - STEERING SYSTEM DIAGNOSIS CHARTS

POWER STEERING NOISE

CONDITION	POSSIBLE CAUSES	CORRECTION
OBJECTIONABLE HISS OR WHISTLE*	1. Damaged or mispositioned steering column shaft/coupling dash panel seal.	1. Reposition or replace steering column shaft/coupling dash panel seal.
	2. Noisy valve in power steering gear.	2. Replace power steering gear.
RATTLE OR CLUNK	1. Power steering gear loose on front suspension crossmember.	1. Inspect power steering gear mounting bolts. Replace as necessary. Tighten to the specified torque.
	2. Front suspension crossmember mounting fasteners loose at frame.	2. Tighten the front suspension crossmember mounting fasteners to the specified torque.
	3. Loose tie rod (outer or inner).	3. Check tie rod pivot points for wear. Replace worn/loose parts as required.
	4. Loose lower control arm mounting bolts at front suspension crossmember.	4. Tighten control arm mounting bolts to the specified torques.
	5. Loose shock assembly mounting fasteners at shock tower.	5. Tighten shock assembly fasteners to the specified torques.
	6. Power steering fluid pressure hose touching the body of the vehicle.	6. Adjust hose to proper position by loosening, repositioning, and tightening fitting to specified torque. Do not bend tubing.
	7. Internal power steering gear noise.	7. Replace power steering gear.
	8. Damaged front suspension crossmember.	8. Replace front suspension crossmember.
POPPING NOISE	1. Worn outer tie rod.	1. Replace outer tie rod.
CHIRP OR SQUEAL (POWER STEERING PUMP)	1. Loose power steering pump drive belt.	1. Check and adjust power steering pump drive belt to specifications. Replace belt if worn or glazed.

STEERING (Continued)

CONDITION	POSSIBLE CAUSES	CORRECTION
WHINE OR GROWL (POWER STEERING PUMP)**	1. Low fluid level.	1. Fill power steering fluid reservoir to proper level and check for leaks (make sure all air is bled from the system fluid).
	2. Power steering hose touching vehicle body or frame.	2. Adjust hose to proper position by loosening, repositioning, and tightening fitting to specified torque. Do not bend tubing. Replace hose if damaged.
	3. Extreme wear of power steering pump internal components.	3. Replace power steering pump and flush system as necessary.
SUCKING AIR SOUND	1. Loose clamp on power steering fluid return hose.	1. Tighten or replace hose clamp.
	2. Missing O-Ring on power steering hose connection.	2. Inspect connection and replace O-Ring as required.
	3. Low power steering fluid level.	3. Fill power steering fluid reservoir to proper level and check for leaks.
	4. Air leak between power steering fluid reservoir and power steering pump.	4. Replace power steering pump (with reservoir).
SQUEAK OR RUBBING SOUND	1. Steering column shroud rubbing.	1. Realign shrouds as necessary.
	2. Steering column shaft rubbing.	2. Move or realign item rubbing shaft.
	3. Clockspring noisy.	3. Remove clockspring. Reinstall wheel. If noise is gone, replace clockspring.
	4. Steering gear internally noisy.	4. Replace steering gear.
SCRUBBING OR KNOCKING NOISE.	1. Incorrect tire or wheel size.	1. Replace incorrect size tire or wheel with size used as original equipment.
	2. Interference between steering gear and other vehicle components.	2. Check for bent or misaligned components and correct as necessary.
	3. Steering gear internal stops worn excessively allowing tires to be steered excessively far.	3. Replace steering gear.

NOTE: * There is some noise in all power steering systems. One of the most common is a hissing sound evident when turning the steering wheel when at a standstill or when parking and the steering wheel is at the end of its travel. Hiss is a very high frequency noise similar to that experienced while slowly closing a water tap. The noise is present in every valve and results when high velocity fluid passes valve orifice edges. There is no relationship between this noise and the performance of the steering system.

NOTE: ** Power steering pump growl results from the development of high pressure fluid flow. Normally this noise level should not be high enough to be objectionable.

STEERING (Continued)

STEERING WHEEL FEEL

CONDITION	POSSIBLE CAUSES	CORRECTION
STEERING WHEEL/ COLUMN CLICKING, CLUNKING OR RATTLING.	1. Steering column preload is not set properly.	1. Loosen steering column coupling pinch bolt to reset steering column preload. Replace pinch bolt and torque to specifications.
	2. Loose steering coupling pinch bolt.	2. Replace pinch bolt and torque to specifications.
	3. Steering column bearings.	3. Replace steering column.
STEERING WHEEL HAS FORE AND AFT LOOSENESS.	1. Steering wheel retaining bolt not properly tightened and torqued.	1. Tighten the steering wheel retaining bolt to its specified torque.
	2. Steering column lower bearing spring retainer slipped on steering column shaft.	2. Replace steering column.
STEERING WHEEL OR DASH VIBRATES DURING LOW SPEED OR STANDSTILL STEERING MANEUVERS.	1. Air in the fluid of the power steering system.	1. Bleed air from system following the power steering pump initial operation service procedure.*
	2. Tires not properly inflated.	2. Inflate tires to the specified pressure.
	3. Excessive engine vibration.	3. Ensure that the engine is running properly.
	4. Loose tie rod end jam nut.	4. Tighten the inner to outer tie rod jam nut to the specified torque.
	5.Overcharged air conditioning system.	5.Check air conditioning pump head pressure and correct as necessary.
STEERING CATCHES, STICKS IN CERTAIN POSITIONS OR IS DIFFICULT TO TURN.	1. Low power steering fluid level.	1. Fill power steering fluid reservoir to specified level and check for leaks.
	2. Tires not inflated to specified pressure.	2. Inflate tires to the specified pressure.
	3. Lack of lubrication in front suspension control arm ball joints.	3. Lubricate ball joints if ball joints are not a lubricated-for-life type ball joint. If ball joint is a lubricated-for-life ball joint, replace ball joint or control arm.
	4. Worn upper or lower control arm ball joint.	4. Replace ball joint or control arm.
	5. Lack of lubrication in steering gear outer tie rod ends.	5. Lubricate tie rod ends if they are not a lubricated-for-life type. If tie rod end is a lubricated-for-life type, replace tie rod end.
	6. Loose power steering pump drive belt.	6. Tighten the power steering pump drive belt to specifications. If drive belt is worn or glazed, replace belt.

STEERING (Continued)

CONDITION	POSSIBLE CAUSES	CORRECTION
	7. Faulty power steering pump flow control (Follow Power Steering System Flow and Pressure Test procedure).	7. Replace power steering pump.
	8. Excessive friction in steering column or intermediate shaft.	8. Isolate and correct condition.
	9. Binding upper or lower control arm ball joint.	9. Replace the upper or lower ball joint.
	10. Excessive friction in power steering gear.	10. Replace power steering gear.
STIFF, HARD TO TURN, SURGE, MOMENTARY INCREASE IN EFFORT WHEN TURNING.	1. Tires not properly inflated.	1. Inflate tires to specified pressure.
	2. Low power steering fluid level.	2. Add power steering fluid as required to power steering fluid reservoir to obtain proper level. Check for leaks.
	3. Loose power steering pump drive belt.	3. Tighten the power steering pump drive belt to specifications. If drive belt is worn or glazed, replace belt.
	4. Lack of lubrication in control arm ball joints.	4. Lubricate ball joints if ball joints are not a lubricated-for-life type ball joint. If ball joint is a lubricated-for-life ball joint, replace ball joint or control arm.
	5. Low power steering pump pressure (Follow Power Steering System Flow and Pressure Test procedure).	5. Replace the power steering pump as necessary.
	6. High internal leak in power steering gear (Follow Power Steering System Flow and Pressure Test procedure).	6. Replace power steering gear.
STEERING WHEEL DOES NOT RETURN TO CENTER POSITION.	1. Tires not inflated properly.	1. Inflate tires to specified pressure.
	2. Improper front wheel alignment.	2. Check and adjust wheel alignment as necessary.
	3. Lack of lubrication in front suspension control arm ball joints.	3. Lubricate ball joints if ball joints are not a lubricated for life type of ball joint. If ball joint is a lubricated for life ball joint, replace ball joint or control arm.
	4. Steering wheel rubbing.**	4. Adjust steering column shrouds to eliminate rubbing condition.
	5. Damaged, mis-positioned or un-lubricated steering column coupler to dash seal.**	5. Replace, reposition, or lubricate dash seal.
	6. Binding upper or lower control arm ball joint.	6. Replace the upper or lower control arm ball joint.

STEERING (Continued)

CONDITION	POSSIBLE CAUSES	CORRECTION
	7. Tight shaft bearing in steering column.	7. Replace the steering column.
	8. Excessive friction in steering column coupling.	8. Replace steering column coupling.
	9. Excessive friction in power steering gear.	9. Replace power steering gear.
EXCESSIVE STEERING WHEEL KICKBACK OR TOO MUCH STEERING WHEEL FREE PLAY.	1. Air in the fluid of the power steering system.	1. Bleed air from system following the the power steering pump initial operation service procedure.*
	2. Power steering gear loose on front suspension crossmember.	2. Inspect power steering gear mounting bolts. Replace as necessary. Tighten to the specified torque.
	3. Steering column coupling worn, broken or loose.	3. Replace steering column coupling.
	4. Free play in steering column.	4. Check all components of the steering system and repair or replace as required.
	5. Worn control arm ball joints.	5. Replace ball joint or control arm as required.
	6. Loose steering knuckle to ball joint stud pinch bolt.	6. Inspect pinch bolts, replace as necessary, and tighten to specified torque.
	7. Front wheel bearings loose or worn.	7. Replace wheel bearing or knuckle as necessary.
	8. Loose outer tie rod ends.	8. Replace outer tie rod ends that have excessive free play.
	9. Loose inner tie rod ends.	9. Replace power steering gear.
	10 Defective steering gear rotary valve.	10. Replace power steering gear.

NOTE: * Steering shudder can be expected in new vehicles and vehicles with recent steering system repairs. Shudder should dissipate after the vehicle has been driven several weeks.

NOTE: ** To evaluate this condition, it may be necessary to disconnect the coupling at the base of the steering column. Turn the steering wheel and feel or listen for internal rubbing in steering column. To avoid damaging the column clockspring, note the following. Before disconnecting coupling, place tires in the straight-ahead position and center steering wheel. Once disconnected, DO NOT rotate steering wheel more than one revolution in either direction and place steering wheel in original location before reconnecting coupling. If this position is lost, the steering column clockspring must be recentered following the procedure found within the procedure for steering column installation in the steering column section.

STEERING (Continued)

POWER STEERING FLUID

CONDITION	POSSIBLE CAUSES	CORRECTION
LOW FLUID LEVEL WITH VISIBLE LEAK.	1. Loose power steering hose fittings.	1. Tighten the fitting to its specified torque.
	2. Damaged or missing fitting seal, gasket, or O-ring.	2. Replace as necessary.
	3. Power steering pump or power steering gear leaking.	3. Repair or replace the leaking component as required.
AERATED FLUID.	1. Low fluid level.*	1. Fill power steering fluid reservoir to proper level.
	2. Air leak between power steering fluid reservoir and pump.	2. Inspect for proper sealing. Replace the power steering pump (with reservoir).
	3. Cracked power steering pump housing.	3. Replace the power steering pump.
RESERVOIR FLUID OVERFLOW AND FLUID THAT IS MILKY IN COLOR	1. Water contamination.	1. Drain the power steering fluid from the system. Flush the system with fresh clean power steering fluid, drain, then refill to the proper level.

NOTE: * Extremely cold temperatures may cause power steering fluid aeration if the power steering fluid is low.

SPECIFICATIONS

POWER STEERING FASTENER TORQUE

DESCRIPTION	N·m	Ft. Lbs.	In. Lbs.
Gear Mounting Bolts	68	50	—
Hose Tube Nuts	31	23	275
Pump Discharge Fitting	75	55	—
Pump Front Mounting Bolts	54	40	—
Pump Rear Mounting Bolts	54	40	—
Pump Bracket-To-Engine Mounting Bolts	54	40	—
Reservoir Mounting Screw	6	—	53
Tie Rod Adjustment Jam Nuts	75	55	—
Tie Rod Steering Knuckle Nut	55	40	—

STEERING (Continued)

SPECIAL TOOLS

POWER STEERING

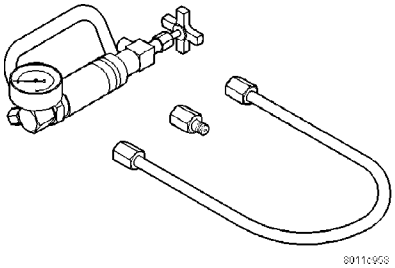

Power Steering Analyzer 6815

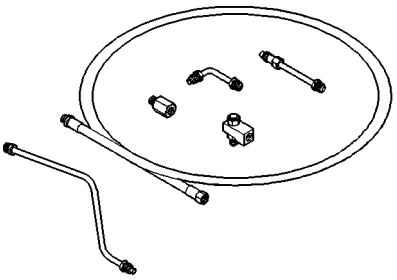

Adapters, Power Steering Analyzer 6893

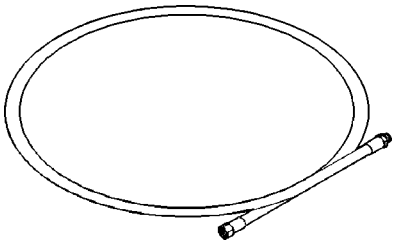

Hose, Power Steering Analyzer 6959

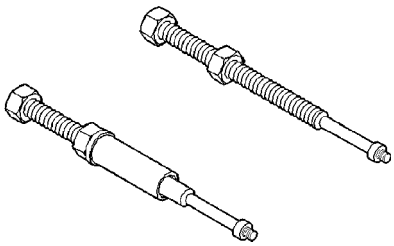

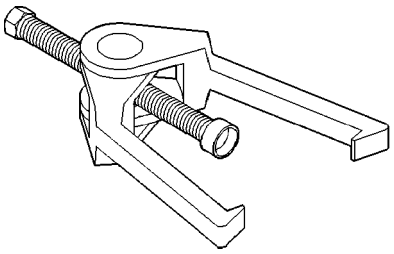

Puller C-3894-A

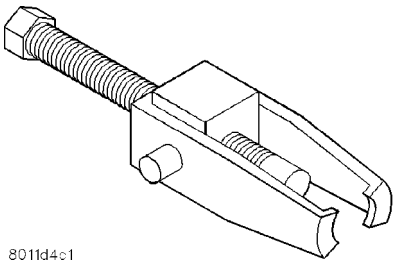

Puller C-4333

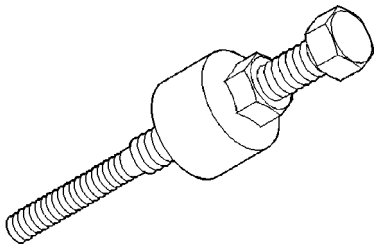

Installer C-4063B

COLUMN

TABLE OF CONTENTS

	page
COLUMN	
DESCRIPTION	10
OPERATION	10
WARNING	11
CAUTION	
CAUTIONS	11
DIAGNOSIS AND TESTING - STEERING COLUMN	11
REMOVAL - STEERING COLUMN	11
INSTALLATION - STEERING COLUMN	15
SPECIFICATIONS	
COLUMN FASTENER TORQUE	17
INTERMEDIATE SHAFT	
DESCRIPTION	17
OPERATION	17
DIAGNOSIS AND TESTING - STEERING COLUMN INTERMEDIATE SHAFT	17
REMOVAL	17
INSTALLATION	18
STEERING WHEEL	
REMOVAL	19
INSTALLATION	20

COLUMN

DESCRIPTION

The steering column mounted to the underside of the instrument panel is a tilt type (Fig. 1). It has been designed to be serviced only as an assembly if it is determined to be defective. These replaceable components mounted on the steering column can be serviced without removal of the steering column from the vehicle:

- key cylinder
- lock cylinder trim ring
- ignition switch
- multi-function switch
- clockspring
- SKIM module
- trim shrouds, and
- steering wheel

The steering column intermediate shaft can also be serviced separately from the steering column.

The speed control switches and driver airbag mounted on the steering wheel are also serviced separately.

OPERATION

Turning of the steering wheel is transferred through the steering column and intermediate shaft, to the power steering gear pinion shaft. The gear then moves the steering knuckles, steering the vehicle.

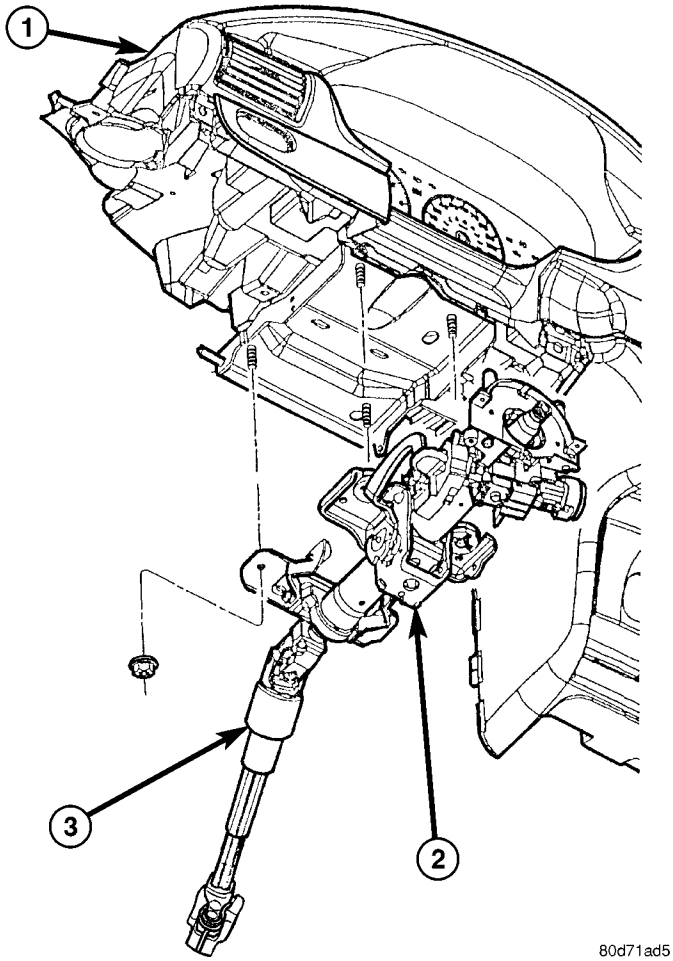

Fig. 1 Steering Column And Intermediate Shaft

1 - INSTRUMENT PANEL
2 - STEERING COLUMN
3 - INTERMEDIATE SHAFT

COLUMN (Continued)

The steering column used on vehicles equipped with a manual transaxle has an anti-theft provision. With the key/lock cylinder turned to the LOCK position, and the key removed, the steering shaft (and steering wheel) cannot be turned more than 180 degrees from center before locking. **Vehicles equipped with an automatic transaxle do not have this feature.**

WARNING

WARNING: BEFORE BEGINNING ANY SERVICE PROCEDURES THAT INVOLVES REMOVING THE AIR BAG. REMOVE AND ISOLATE THE NEGATIVE (-) BATTERY CABLE (GROUND) FROM THE VEHICLE BATTERY. THIS IS THE ONLY SURE WAY TO DISABLE THE AIR BAG SYSTEM. FAILURE TO DO THIS COULD RESULT IN ACCIDENTAL AIR BAG DEPLOYMENT AND POSSIBLE PERSONAL INJURY.

WARNING: WHEN AN UNDEPLOYED AIRBAG MODULE IS TO BE REMOVED FROM THE STEERING WHEEL, DISCONNECT BATTERY GROUND CABLE AND ISOLATE. ALLOW SYSTEM CAPACITOR TO DISCHARGE FOR A MINIMUM OF TWO MINUTES, THEN BEGIN AIRBAG REMOVAL.

WARNING: THE AIR BAG SYSTEM IS A SENSITIVE, COMPLEX ELECTRO-MECHANICAL UNIT. BEFORE ATTEMPTING TO DIAGNOSE, REMOVE OR INSTALL THE AIR BAG SYSTEM COMPONENTS YOU MUST FIRST DISCONNECT AND ISOLATE THE BATTERY NEGATIVE (GROUND) CABLE. FAILURE TO DO SO COULD RESULT IN ACCIDENTAL DEPLOYMENT OF THE AIR BAG AND POSSIBLE PERSONAL INJURY. THE FASTENERS, SCREWS, AND BOLTS, ORIGINALLY USED FOR THE AIR BAG COMPONENTS, HAVE SPECIAL COATINGS AND ARE SPECIFICALLY DESIGNED FOR THE AIR BAG SYSTEM. THEY MUST NEVER BE REPLACED WITH ANY SUBSTITUTES. ANYTIME A NEW FASTENER IS NEEDED, REPLACE WITH THE CORRECT FASTENERS PROVIDED IN THE SERVICE PACKAGE OR FASTENERS LISTED IN THE PARTS BOOKS. BEFORE SERVICING A STEERING COLUMN EQUIPPED WITH AN AIR BAG, (Refer to 8 - ELECTRICAL/RESTRAINTS - WARNING)

WARNING: WHEN HANDLING AN UNDEPLOYED AIRBAG MODULE DURING SERVICING OF THE STEERING COLUMN THE FOLLOWING PRECAUTIONS SHOULD BE OBSERVED. AT NO TIME SHOULD ANY SOURCE OF ELECTRICITY BE PERMITTED NEAR THE INFLATOR ON THE BACK OF THE AIRBAG MODULE. WHEN CARRYING A LIVE MODULE, THE TRIM COVER SHOULD BE POINTED AWAY FROM THE BODY TO MINIMIZE INJURY IF MODULE ACCIDENTLY DEPLOYS. IF AIRBAG MODULE IS PLACED ON A BENCH OR OTHER SURFACE, PLASTIC COVER SHOULD BE FACE UP TO MINIMIZE MOVEMENT IN CASE OF ACCIDENTAL DEPLOYMENT.

WARNING: SAFETY GOGGLES SHOULD BE WORN AT ALL TIMES WHEN WORKING ON STEERING COLUMNS.

CAUTION

CAUTIONS

CAUTION: Disconnect the negative (ground) cable from the battery, before servicing any column component.

CAUTION: Do not attempt to remove the pivot pins to disassemble the tilting mechanism. Damage will occur.

DIAGNOSIS AND TESTING - STEERING COLUMN

For diagnosis of conditions relating to the steering column, (Refer to 19 - STEERING - DIAGNOSIS AND TESTING).

REMOVAL - STEERING COLUMN

NOTE: Before proceeding, review all WARNINGS and CAUTIONS. (Refer to 19 - STEERING/COLUMN - WARNING) (Refer to 19 - STEERING/COLUMN - CAUTION)

(1) Open hood and remove remote ground cable from ground stud on left front shock tower. Isolate ground cable from vehicle by installing cable isolator on ground stud (Fig. 2).

WARNING: WHEN AN UNDEPLOYED AIRBAG IS TO BE REMOVED FROM THE STEERING WHEEL, DISCONNECT BATTERY GROUND CABLE AND ISOLATE. ALLOW SYSTEM CAPACITOR TO DISCHARGE FOR TWO MINUTES, THEN BEGIN AIRBAG REMOVAL.

(2) Wait for a minimum of 2 minutes before starting to remove air bag from steering wheel. This will allow the airbag system capacitor to de-energize.

COLUMN (Continued)

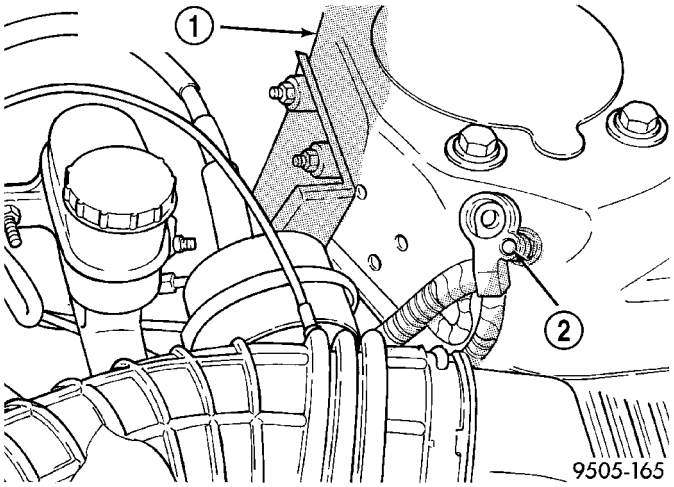

Fig. 2 Correctly Isolated Remote Ground Cable

1 - LEFT STRUT TOWER
2 - GROUND STUD

(3) Remove fuse panel cover from left end of instrument panel.

(4) Remove center bezel surrounding radio and climate control panel.

(5) Remove screw attaching bezel to instrument panel behind climate control panel. Remove bezel.

(6) Remove outside mirror switch bezel from instrument panel.

(7) Remove silencer panel below steering column knee bolster.

(8) Remove screws attaching knee bolster to instrument panel.

(9) Lower knee bolster and disconnect connectors from rear, then remove bolster.

(10) Position front wheels of vehicle in the **straight-ahead** position.

(11) Remove speed control switches (Fig. 3) from steering wheel. Speed control switches are mounted to steering wheel by screws (one screw, each switch) which are accessible from back side of steering wheel. Disconnect wire connector from each switch.

WARNING: WHEN HANDLING AN UNDEPLOYED AIRBAG DURING SERVICING OF THE STEERING COLUMN THE FOLLOWING PRECAUTIONS SHOULD BE OBSERVED. AT NO TIME SHOULD ANY SOURCE OF ELECTRICITY BE PERMITTED NEAR THE INFLATOR ON THE BACK OF THE AIRBAG MODULE. WHEN CARRYING A LIVE MODULE, THE TRIM COVER SHOULD BE POINTED AWAY FROM THE BODY TO MINIMIZE INJURY IF MODULE ACCIDENTLY DEPLOYS. IF AIRBAG MODULE IS PLACED ON A BENCH OR OTHER SURFACE, PLASTIC COVER SHOULD BE FACE UP TO MINIMIZE MOVEMENT IN CASE OF ACCIDENTAL DEPLOYMENT.

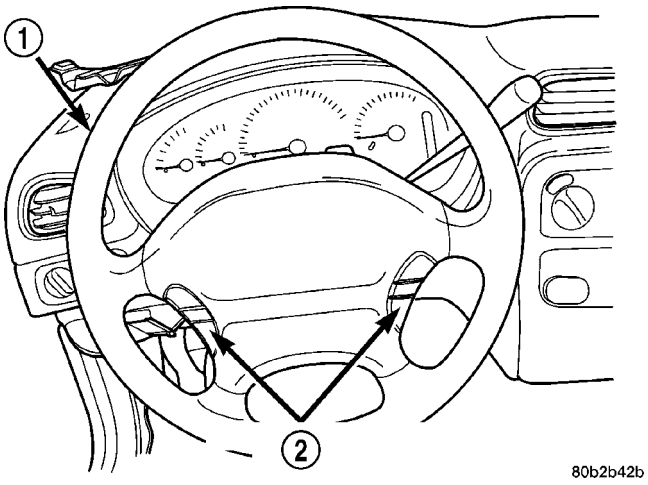

Fig. 3 Speed Control Switches

1 - STEERING WHEEL
2 - SPEED CONTROL SWITCHES

(12) Remove 2 bolts attaching driver airbag to steering wheel (Fig. 4).

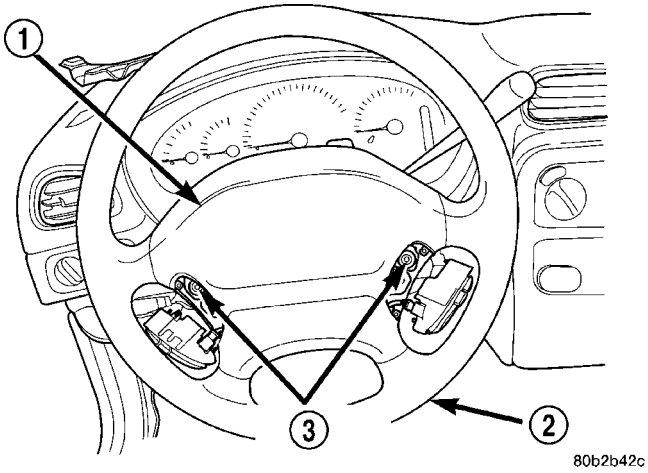

Fig. 4 Airbag Attaching Bolts

1 - AIRBAG
2 - STEERING WHEEL
3 - MOUNTING SCREWS

(13) Lift driver airbag from steering wheel and disconnect electrical connectors from back of driver airbag (Fig. 5). Connectors are removed by compressing latches on sides of connectors and pulling them straight out of airbag. Do not twist the connectors when removing them from airbag.

(14) Remove driver airbag.

(15) If equipped with remote audio control switches, disconnect 4–way connector between clockspring and steering wheel wiring harness (Fig. 6).

NOTE: Before removing steering wheel, verify front wheels and steering wheel are in staight-ahead position.

COLUMN (Continued)

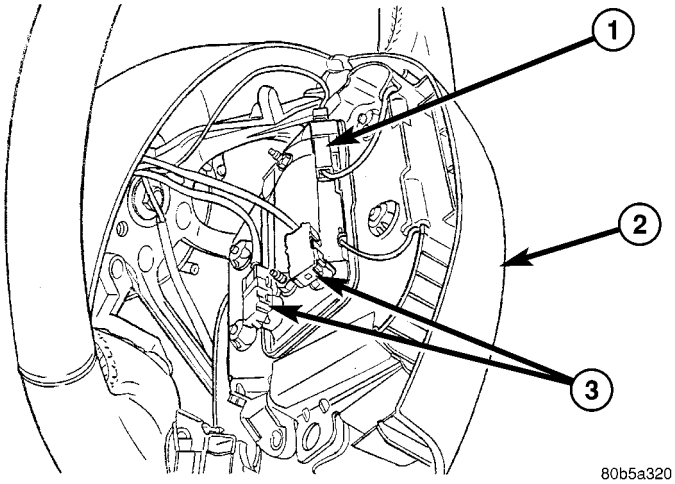

Fig. 5 Airbag Electrical Connections

1 - HORN CONNECTOR
2 - DRIVER AIRBAG
3 - AIRBAG SQUIB CONNECTORS

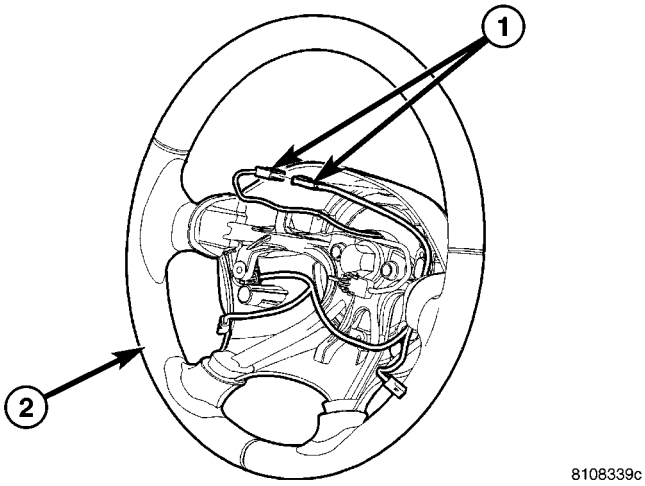

Fig. 6 Remote Audio Switches Connector (If Equipped)

1 - AUDIO SWITCHES CONNECTOR
2 - STEERING WHEEL

(16) Unscrew steering wheel retaining bolt (Fig. 7) almost all the way out (approximately 15 mm). **Do not completely remove bolt.**

CAUTION: When installing the wheel puller on the steering wheel, be sure puller bolts are hand threaded no more than 5 revolutions in the threaded holes of the steering wheel. Avoid contact between the bolts and the face of the clockspring, otherwise damage to the clockspring may result.

(17) Install puller on steering wheel as shown (Fig. 8).

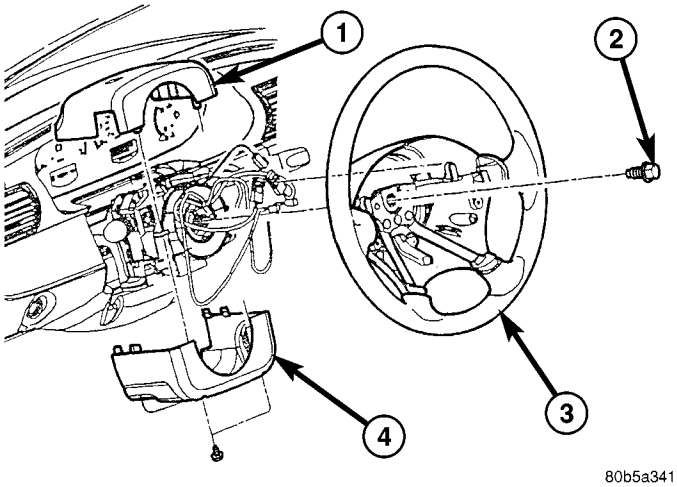

Fig. 7 Steering Wheel And Shroud Mounting

1 - UPPER SHROUD
2 - BOLT
3 - STEERING WHEEL
4 - LOWER SHROUD

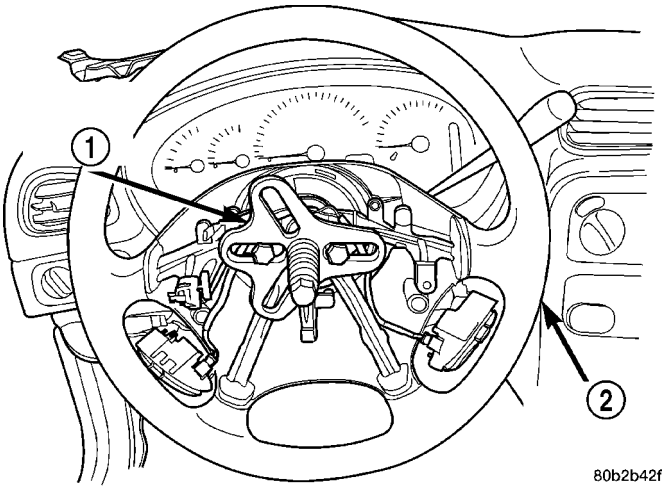

Fig. 8 Puller Installed On Steering Wheel

1 - STEERING WHEEL PULLER
2 - STEERING WHEEL

CAUTION: Do not bump or hammer on steering wheel or steering column shaft when removing steering wheel from steering column.

(18) While holding steering wheel firmly in the **straight-ahead** position, loosen steering wheel from steering column shaft using wheel puller.

(19) Remove puller from steering wheel, then remove steering wheel retaining bolt and steering wheel.

COLUMN (Continued)

(20) Remove 2 screws attaching upper and lower shrouds to steering column (Fig. 7). First remove upper shroud from steering column by pressing inward on upper shroud just above the parting line while pulling upper and lower shrouds apart. Next, release tilt lever and tilt steering column to its highest point. Then remove lower shroud from steering column.

(21) Remove the 2 wiring harness connectors from the clockspring (Fig. 9).

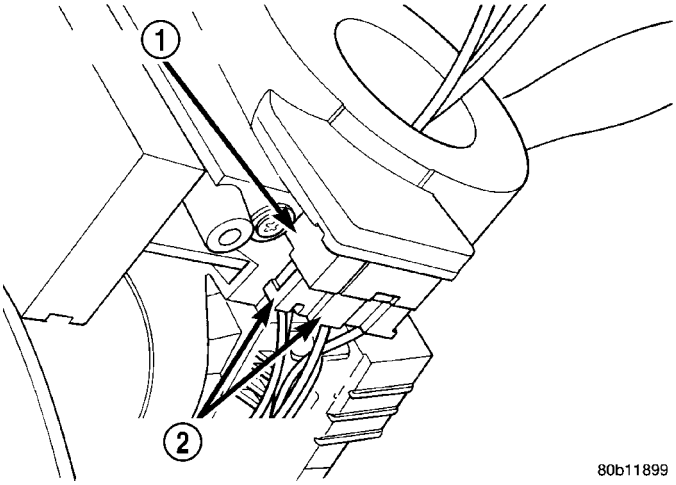

Fig. 9 Wiring Harness Connection To Clock Spring

1 - CLOCK SPRING
2 - WIRING HARNESS CONNECTORS

(22) Remove the 3 wiring harness connectors from the back of the ignition switch (Fig. 10).

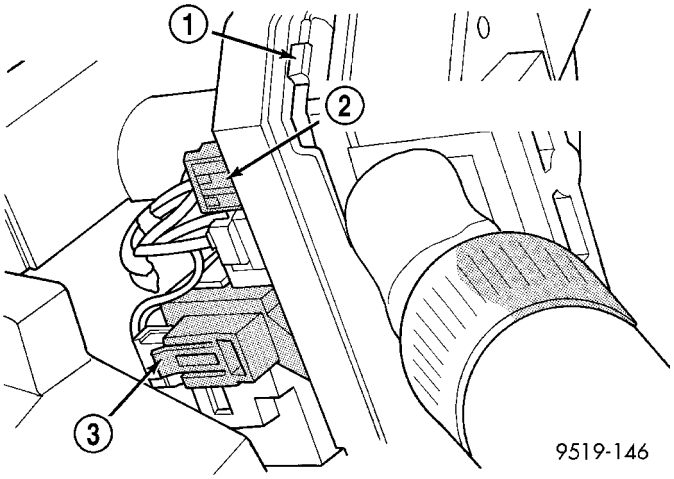

Fig. 10 Wiring Harness Connections To Ignition And Multi-Function Switch

1 - MULTI-FUNCTION SWITCH
2 - MULTI-FUNCTION SWITCH WIRING HARNESS CONNECTOR
3 - IGNITION SWITCH

(23) If equipped, disconnect SKIM connector.

(24) Remove the 2 wiring harness connectors from the multi-function switch (Fig. 10) (Fig. 11).

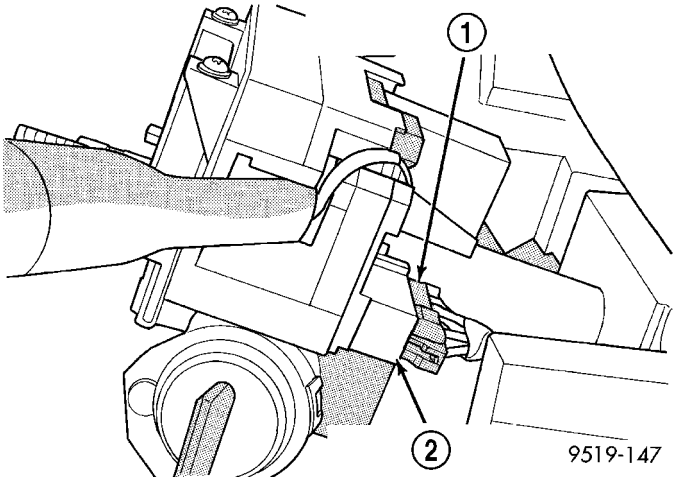

Fig. 11 Wiring Harness Connection To Multi-Function Switch

1 - MULTI-FUNCTION SWITCH WIRING HARNESS CONNECTOR
2 - MULTI-FUNCTION SWITCH

(25) If vehicle is equipped with an automatic transaxle, rotate the key cylinder to the ON position. Depress locking tab on shifter/ignition interlock cable (Fig. 12) and remove the cable from the key lock housing.

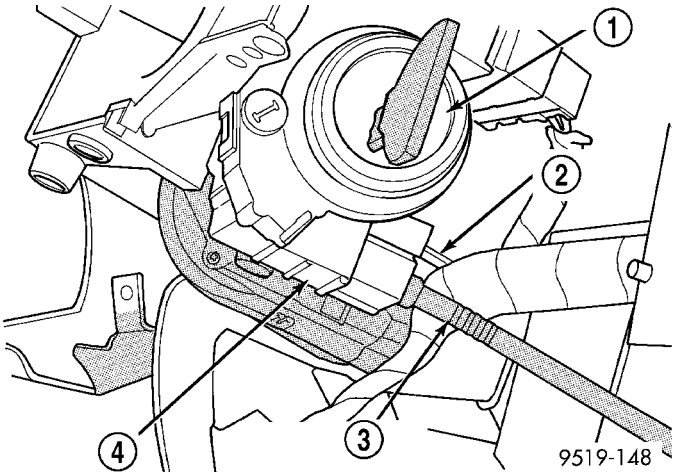

Fig. 12 Shifter/Ignition Cable At Lock Cylinder Housing

1 - KEY CYLINDER
2 - LOCKING TAB
3 - SHIFTER IGNITION INTERLOCK CABLE
4 - KEY LOCK HOUSING

(26) Under the instrument panel, disconnect the intermediate shaft from the steering gear shaft. To do so, remove the pinch bolt from the intermediate shaft coupler (Fig. 13), then slide the intermediate shaft up and off the steering gear shaft.

(27) Remove the 2 upper steering column mounting bracket-to-support bracket nuts. Then remove the 2 lower steering column mounting bracket-to-support bracket nuts (Fig. 14).

COLUMN (Continued)

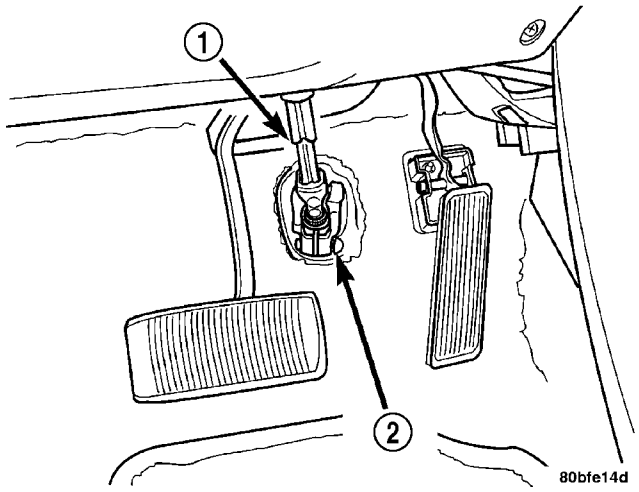

Fig. 13 Intermediate Shaft Attachment

1 - INTERMEDIATE SHAFT
2 - PINCH BOLT

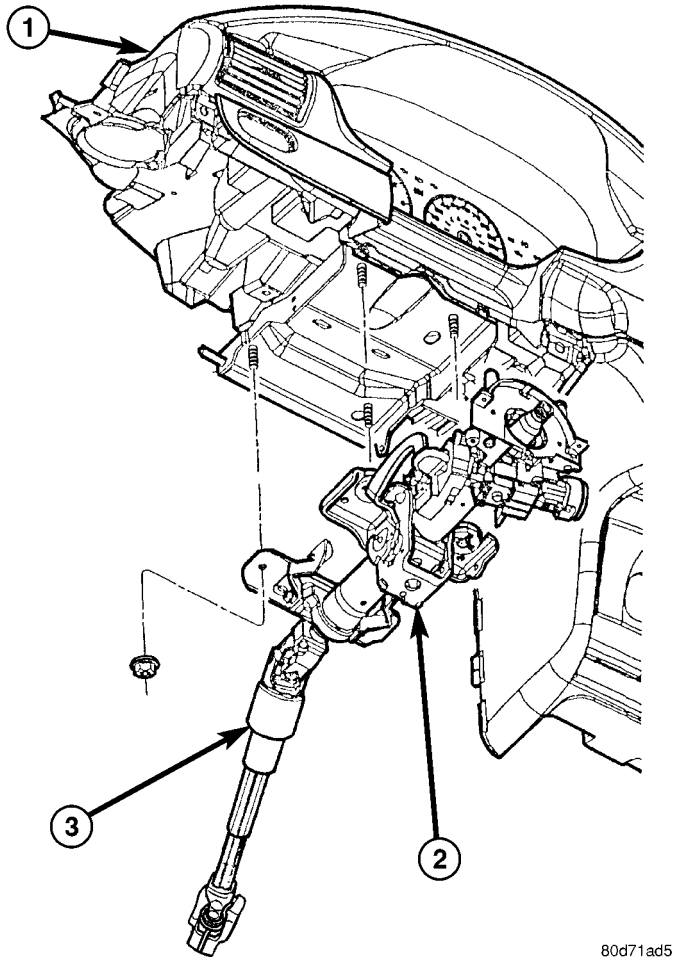

Fig. 14 Steering Column And Intermediate Shaft

1 - INSTRUMENT PANEL
2 - STEERING COLUMN
3 - INTERMEDIATE SHAFT

(28) Remove steering column and intermediate shaft from vehicle passenger compartment. Use care to avoid damaging column harness or interior trim.

(29) If steering column is being replaced, perform the following:

(a) Remove intermediate shaft. (Refer to 19 - STEERING/COLUMN/INTERMEDIATE SHAFT - REMOVAL)

(b) Remove SKIM.

(c) Remove halo ring from around key/lock cylinder.

(d) Remove key cylinder.

(e) Remove multi-function switch.

(f) Remove ignition switch (if required).

INSTALLATION - STEERING COLUMN

(1) If steering column is being replaced, perform following:

(a) Install ignition switch (if required).

(b) Install multi-function switch.

(c) Install key cylinder.

(d) Install halo ring from around key/lock cylinder.

(e) Install SKIM.

(f) Install intermediate shaft. (Refer to 19 - STEERING/COLUMN/INTERMEDIATE SHAFT - INSTALLATION)

(2) Install steering column on studs in steering column support bracket (Fig. 14). Loosely install 4 steering column assembly attaching nuts.

(3) Tighten 2 lower steering column assembly mounting nuts to hold steering column in place. Be sure both break-away capsules are still fully seated in slots of upper steering column mounting bracket and mounting studs are centered fore-and-aft in plastic capsules. Then equally tighten both steering column mounting nuts, until upper steering column mounting bracket is seated against support bracket. Tighten 4 steering column bracket to support bracket nuts to 17 N·m (150 in. lbs.).

(4) If a new steering column is being installed in vehicle, remove shipping (grenade) pin (if equipped) from steering column.

(5) Ensure front wheels of vehicle are positioned **straight-ahead**, and steering wheel master serration in steering column shaft is positioned at 12 O'clock.

(6) Under instrument panel, reconnect intermediate shaft to steering gear shaft. To do so, align flats and slide intermediate shaft onto steering gear shaft aligning pinch bolt hole with notch formed into steering gear shaft. Install a **new** pinch bolt in intermediate shaft coupler (Fig. 13), then tighten pinch bolt to a torque of 44 N·m (32 ft. lbs.).

COLUMN (Continued)

(7) If vehicle is equipped with an automatic transaxle, install shifter/ignition interlock cable (Fig. 12) in lock cylinder housing.

(8) If equipped, connect wiring connector to SKIM.

(9) Install wiring harness connectors on back of ignition switch (Fig. 10).

(10) Install 2 wiring harness connectors to multifunction switch (Fig. 10) (Fig. 11).

(11) Install 2 wiring harness connectors to clockspring (Fig. 9).

(12) Install upper and lower steering column shrouds onto lock housing of steering column. Install and securely tighten 2 upper to lower steering column shroud to lock housing attaching screws to 1.9 N·m (17 in. lbs.) (Fig. 7).

CAUTION: If any doubt is present as to whether clockspring is properly centered, this clockspring centering procedure MUST be performed prior to installing steering wheel. If clockspring is not centered it may be overextended, causing clockspring assembly to become inoperative. clockspring is centered when yellow centering indicator is present in centering window and arrow on label points at Drive Pin.

(13) Center clockspring using following procedure.

(a) Depress plastic locking pin to disengage clockspring locking mechanism.

(b) Keeping locking mechanism disengaged, rotate clockspring rotor in CLOCKWISE direction to end of travel. Do not apply excessive torque.

(c) From end of clockwise travel, slowly rotate rotor in COUNTERCLOCKWISE direction until yellow appears in centering window of clockspring. When yellow appears in centering window locking pin on clockspring rotor will be in front of arrow on clockspring label.

(d) Release plastic locking pin to engage clockspring locking mechanism.

CAUTION: Do not install steering wheel by driving it onto shaft. Pull steering wheel down onto steering column shaft using ONLY steering wheel retaining bolt.

(14) Feed clockspring wiring leads through steering wheel. Position steering wheel on shaft of steering column, making sure master serration in wheel hub and on steering column shaft line up.

(15) Install steering wheel to steering column shaft with bolt and tighten until steering wheel is fully installed on shaft. Tighten steering wheel retaining bolt to a torque of 54 N·m (40 ft. lbs.).

(16) Turn key cylinder to unlock position.

(17) If equipped with remote audio control switches, connect 4–way connector between clockspring and steering wheel wiring harness (Fig. 6). Store connection behind tab in steering wheel housing.

(18) Connect horn switch wiring connector from clockspring to airbag connector (Fig. 5).

(19) Install airbag electrical connectors to connectors on rear of driver airbag (Fig. 5). **Be sure electrical connector from clockspring is securely latched into airbag connector.**

CAUTION: The fasteners, screws, and bolts, originally used for airbag components are specifically designed for airbag system. They must never be replaced with any substitutes. Anytime a new fastener is needed, replace only with correct fasteners provided in service packages or fasteners listed in parts book.

NOTE: Make sure steering wheel and airbag module are in right-side-up position before installing airbag module on steering wheel.

(20) Install airbag module on steering wheel. Install only two original or correct replacement airbag module attaching bolts (Fig. 4). Tighten two airbag module attaching bolts to a torque of 9.6 N·m (85 in. lbs.).

(21) Connect speed control wiring leads to speed control switches.

(22) Install speed control switches in steering wheel (Fig. 3). Install screws attaching speed control switches to steering wheel. Tighten screws to a torque of 1.4 N·m (12 in. lbs.).

(23) Install lower instrument panel knee bolster onto lower instrument panel. Install and securely tighten knee bolster to instrument panel attaching screws.

(24) Install mirror switch bezel.

(25) Install fuse panel cover on left end of instrument panel.

(26) Install inboard switch bezel. Install mounting screw.

(27) Install center bezel surrounding radio and climate control panel from top cover of instrument panel.

(28) Install silencer panel below steering column knee bolster.

CAUTION: When reconnecting battery on a vehicle that has had air bag module removed, ensure no occupants are in vehicle and following procedure is used.

(29) Reconnect negative cable to battery using steps listed below.

COLUMN (Continued)

(a) Connect DRBIII® scan tool to diagnostic datalink connector.

(b) Turn ignition key to ON position. Exit vehicle with DRB scan tool.

(c) Ensuring that their are no occupants in vehicle, connect negative cable to negative post of battery.

(d) Using DRBIII scan tool, read and record active fault codes. Also read and record any stored fault codes. Refer to Appropriate Diagnostic Information if any faults are found.

(e) Erase stored faults if there are no active fault codes. If problems remain, fault codes will not erase.

(f) Reaching through drivers window, between steering wheel and instrument cluster, turn ignition key to OFF and then ON observing instrument cluster airbag indicator. It should go on for six to eight seconds, then go out. This will indicate that air bag system is functioning normally.

(30) **If airbag warning indicator fails to light, blinks on and off or goes on and stays on, there is an air bag system malfunction.** Refer to Appropriate Diagnostic Information to diagnose any system malfunction.

(31) Test operation of horn, lights and any other functions that are steering column operated. If applicable reset radio and clock.

(32) Road test vehicle to ensure proper operation of steering system and speed control system.

SPECIFICATIONS

COLUMN FASTENER TORQUE

DESCRIPTION	N·m	Ft. Lbs.	In. Lbs.
Airbag Module Mounting Bolts	9.6	—	85
Column Mounting Nuts	17	13	150
Intermediate Shaft Pinch Bolt	44	32	—
Speed Control Switch Screws	1.4	—	12
Steering Wheel Retaining Bolt	54	40	—

INTERMEDIATE SHAFT

DESCRIPTION

The steering column intermediate shaft is located between the steering column and the power steering gear. It has a universal joint at each end. It has a slider-stage in the center portion of the shaft.

The steering column intermediate shaft fastens to the steering column's splined shaft using a roll pin. It uses a pinch bolt to secure the shafts to one another at the steering gear (Fig. 15).

OPERATION

The steering column intermediate shaft connects the steering column shaft to the power steering gear's pinion shaft. It's flexible joints allow the shaft to universal when rotating.

DIAGNOSIS AND TESTING - STEERING COLUMN INTERMEDIATE SHAFT

The steering column intermediate shaft and its universal joint couplers (Fig. 1) must be inspected whenever any of the following conditions exist:

- After the vehicle has been involved in a collision which deploys the airbag, regardless of the extent of damage done to the vehicle.
- After the vehicle has been involved in an undercarriage impact which results in any type of damage to the front suspension crossmember.
- Under any conditions which result in the steering column assembly or steering column shaft receiving a force great enough to move the steering column or shaft forward of rearward in a vehicle.

Inspect the intermediate shaft and its universal joint couplers for any of the following conditions:

- seized or binding bearings
- loose bearing stakes
- bearings not fully seated in the coupler yoke
- bent intermediate shaft

Presence of any of the above faulty conditions call for replacement of the entire steering column intermediate shaft.

REMOVAL

(1) Remove fuse panel cover from left end of instrument panel.

(2) Remove center bezel surrounding radio and climate control panel.

(3) Remove screw attaching bezel to instrument panel behind climate control panel. Remove bezel.

(4) Remove outside mirror switch bezel from instrument panel.

(5) Remove silencer panel below steering column knee bolster.

INTERMEDIATE SHAFT (Continued)

(6) Remove screws attaching knee bolster to instrument panel.

(7) Lower knee bolster and disconnect connectors from rear, then remove bolster.

(8) Position front wheels of vehicle in the **straight-ahead** position.

(9) Disconnect the intermediate shaft from the steering gear shaft. To do so, remove the pinch bolt from the intermediate shaft coupler (Fig. 15), then slide the intermediate shaft up and off the steering gear shaft.

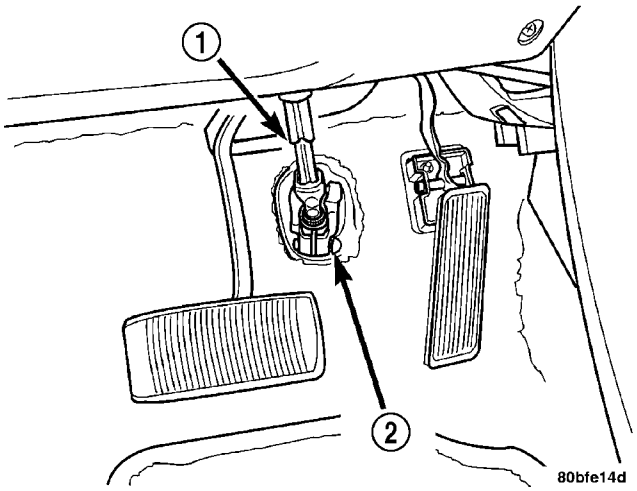

Fig. 15 Intermediate Shaft Attachment

1 - INTERMEDIATE SHAFT
2 - PINCH BOLT

(10) Turn the steering wheel 90° to the **LEFT**. This is done to allow proper roll pin removal tool installation.

(11) Using a steering wheel holder, lock the steering wheel in this position. **This is done to keep the clockspring from turning, losing its center. It will also help hold the shaft steady while removing the roll pin.**

(12) Install Remover/Installer, Special Tool 6831-A, through center of roll pin in intermediate shaft's universal joint and install knurled nut (Fig. 16).

(13) While holding hex on end threaded rod, tighten the nut on threaded rod of Remover/Installer. This will pull the roll pin out of the intermediate shaft's universal joint.

(14) Using a screwdriver inserted between the shaft's universal joint and the steering column lower mounting bracket, gently pry intermediate shaft off steering column shaft.

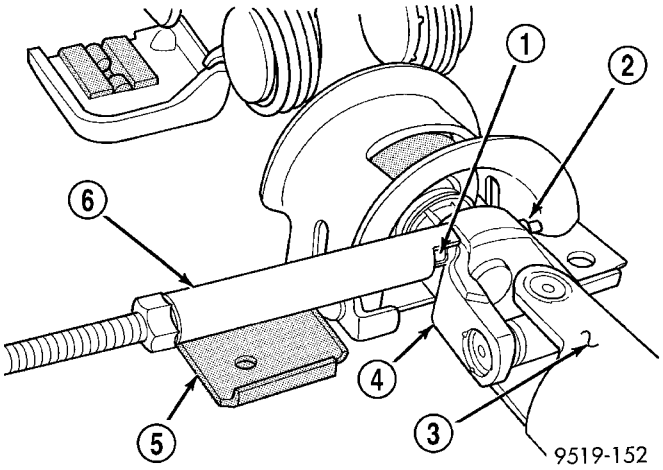

Fig. 16 Removing Roll Pin From Flex Joint (Typical)

1 - ROLL PIN
2 - KNURLED NUT
3 - INTERMEDIATE SHAFT
4 - UNIVERSAL JOINT
5 - STEERING COLUMN LOWER MOUNTING BRACKET
6 - SPECIAL TOOL 6831–A

INSTALLATION

(1) Start roll pin into universal joint prior to installing intermediate shaft on steering column shaft. Install roll pin into just far enough to square roll pin to hole in universal joint. If roll pin is installed too far, universal joint will not slid onto steering column shaft.

(2) Install intermediate shaft on steering shaft until correctly positioned to allow roll pin to be installed in coupler.

(3) Install Remover/Installer, Special Tool 6831-A, through center of roll pin and install knurled nut as shown (Fig. 17).

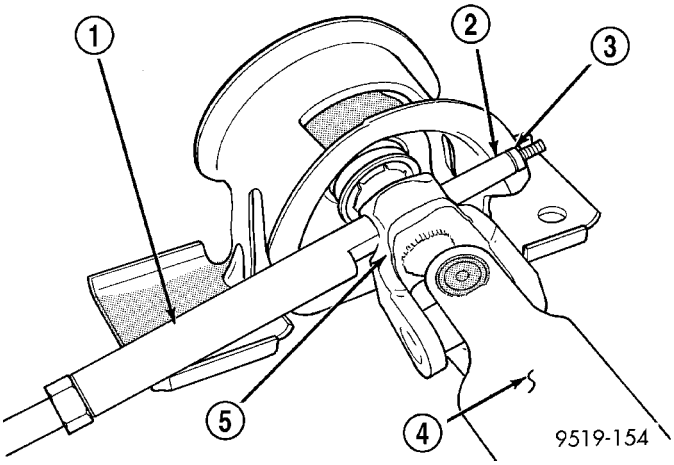

Fig. 17 Tool Set-Up For Installing Roll Pin (Typical)

1 - SPECIAL TOOL 6831–A
2 - ROLL PIN
3 - KNURLED NUT
4 - INTERMEDIATE SHAFT
5 - UNIVERSAL JOINT

INTERMEDIATE SHAFT (Continued)

(4) Using Remover/Installer (Fig. 17), install roll pin into the coupler until roll pin is fully and evenly installed through both sides of the coupler assembly.

(5) Remove the steering wheel holder and turn the steering wheel 90° to the right so that the steering wheel is back in the **straight-ahead** position. **Do not allow the steering wheel to turn any further or in any other direction; clockspring center will be lost and clockspring centering procedure must then be performed** (Refer to 8 - ELECTRICAL/RESTRAINTS/CLOCKSPRING - STANDARD PROCEDURE)

(6) Under the instrument panel, reconnect the intermediate shaft to the steering gear shaft. To do so, align the flats and slide the intermediate shaft onto the steering gear shaft aligning the pinch bolt hole with the notch formed into the steering gear shaft. Install a **new** pinch bolt in the intermediate shaft coupler (Fig. 15), then tighten the pinch bolt to a torque of 44 N·m (32 ft. lbs.).

(7) Install lower instrument panel knee bolster onto the lower instrument panel. Install and securely tighten the knee bolster to instrument panel attaching screws.

(8) Install the mirror switch bezel.

(9) Install fuse panel cover on left end of instrument panel.

(10) Install inboard switch bezel. Install mounting screw.

(11) Install center bezel surrounding radio and climate control panel from top cover of instrument panel.

(12) Install silencer panel below steering column knee bolster.

(13) Road test vehicle to ensure proper operation of the steering system.

STEERING WHEEL

REMOVAL

(1) Position steering wheel so that tires are aimed **straight-ahead**.

(2) Disconnect and isolate battery negative remote cable.

(3) Remove speed control switch screws from back of steering wheel. Pull the switch pods out and disconnect wire connectors.

(4) Remove Driver Airbag attaching bolts from steering wheel.

(5) Lift airbag and disconnect airbag squib connectors using finger grip (Fig. 18). Use care not to pull on wires. Never use a metallic tool to pry on the connector.

(6) Disconnect horn wire connector from airbag mounting bracket (Fig. 18). Remove driver airbag.

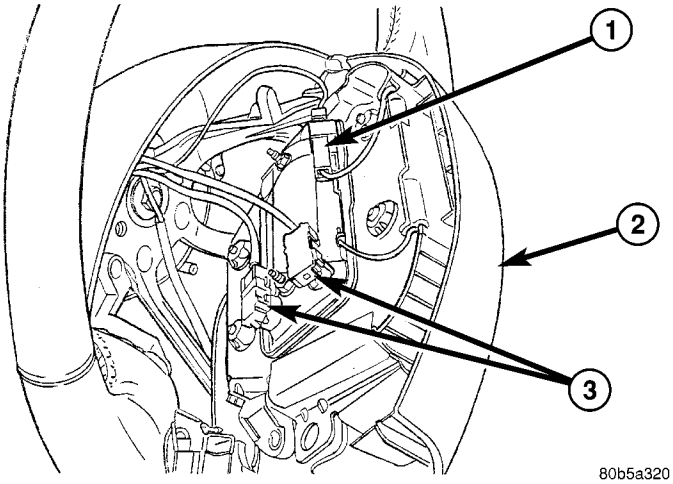

Fig. 18 Airbag Electrical Connections

1 - HORN CONNECTOR
2 - DRIVER AIRBAG
3 - AIRBAG SQUIB CONNECTORS

(7) If equipped with remote audio control switches, disconnect 4–way connector between clockspring and steering wheel wiring harness (Fig. 19).

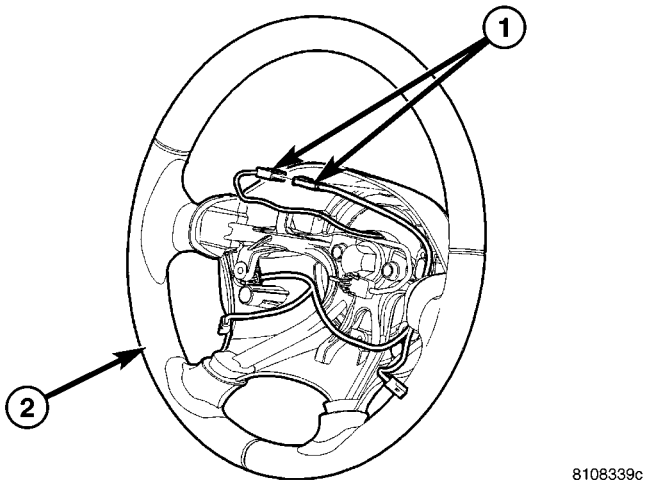

Fig. 19 Remote Audio Switches Connector (If Equipped)

1 - AUDIO SWITCHES CONNECTOR
2 - STEERING WHEEL

(8) Unscrew steering wheel retaining bolt (Fig. 20) almost all the way out (approximately 15 mm). Do not completely remove the bolt at this time.

CAUTION: When installing the wheel puller on the steering wheel, be sure puller bolts are hand threaded no more than 5 revolutions in the threaded holes of the steering wheel. Avoid contact between the bolts and the face of the clockspring, otherwise damage to the clockspring may result.

(9) Install puller on steering wheel.

STEERING WHEEL (Continued)

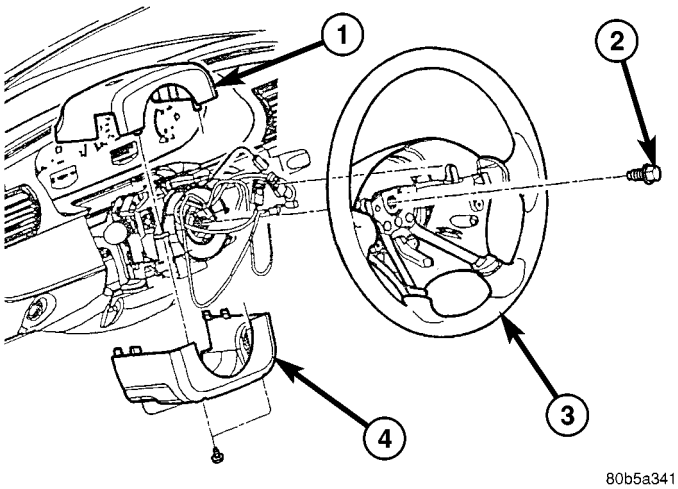

Fig. 20 Steering Wheel And Shroud Mounting

1 - UPPER SHROUD
2 - BOLT
3 - STEERING WHEEL
4 - LOWER SHROUD

(10) While holding steering wheel firmly in **straight-ahead** position, loosen steering wheel using wheel puller (Fig. 8). Remove puller from wheel.

(11) Remove retaining bolt, then steering wheel. Carefully feed all wires through steering wheel armature to avoid damaging wires as steering wheel is removed.

INSTALLATION

CAUTION: Do not install steering wheel by driving it onto the shaft. Pull steering wheel down onto steering column shaft using ONLY the steering wheel retaining bolt.

(1) Ensure that road wheels are aimed straight-ahead.

(2) Ensure that clockspring is centered by using centering indicator. Refer to Clockspring Centering Procedure. (Refer to 8 - ELECTRICAL/RESTRAINTS/CLOCKSPRING - ADJUSTMENTS)

(3) Ensure that turn signal stalk is in neutral position.

(4) As steering wheel is installed onto steering shaft, pay special attention to following:

(a) Carefully route clockspring wires over top of the steering wheel armature, through wheel.

(b) Ensure that pocket in rear of steering wheel hub lines up with drive pin on clockspring rotor.

(c) Ensure that block tooth in steering wheel hub lines up with missing tooth on steering column shaft.

(5) Install and tighten steering wheel retaining bolt (Fig. 20) to 54 N·m (40 ft. lbs.) torque.

(6) If equipped with remote audio control switches, connect 4–way connector between clockspring and steering wheel wiring harness (Fig. 19). Store connection behind tab in steering wheel housing.

(7) Connect horn lead wiring connector at driver airbag bracket (Fig. 18).

(8) Route speed control wires under mechanism and through speed control switch pockets.

(9) Connect airbag squib leads to Driver Airbag (Fig. 18). **Be sure squib wiring connectors are securely latched into airbag connectors.** Check that wires do not get pinched during installation.

(10) Place airbag into mounted position. Install airbag mounting bolts and tighten the left side first. Tighten to 9.6 ± 1.0 N·m (85 ± 10 in. lbs.) torque.

(11) Connect speed control wires to switches and install switches. Tighten screws to 1.4 ± .3 N·m (12 ± 3 in. lbs.) torque.

(12) To properly connect battery and test airbag system, (Refer to 8 - ELECTRICAL/RESTRAINTS - DIAGNOSIS AND TESTING).

GEAR

TABLE OF CONTENTS

	page
GEAR	
DESCRIPTION	21
OPERATION	21
REMOVAL	22
DISASSEMBLY	24
ASSEMBLY	24
INSTALLATION	25
POWER STEERING PRESSURE SWITCH	
DESCRIPTION	27
OPERATION	27
REMOVAL	27
INSTALLATION	27
TIE ROD - OUTER	
REMOVAL	28
INSTALLATION	28

GEAR

DESCRIPTION

The steering gear on this vehicle is a rack and pinion unit with power assist (Fig. 1). It is mounted on the front suspension crossmember. The steering column connects to the steering gear shaft on top of the gear. The outer tie rod ends of the gear connect to each suspension steering knuckle to steer the vehicle.

OPERATION

Turning of the steering wheel is converted into linear travel through the meshing of the helical pinion teeth with the rack teeth. Power assist steering is provided by an open center, rotary type control valve which directs fluid from the pump to either side of the integral rack piston.

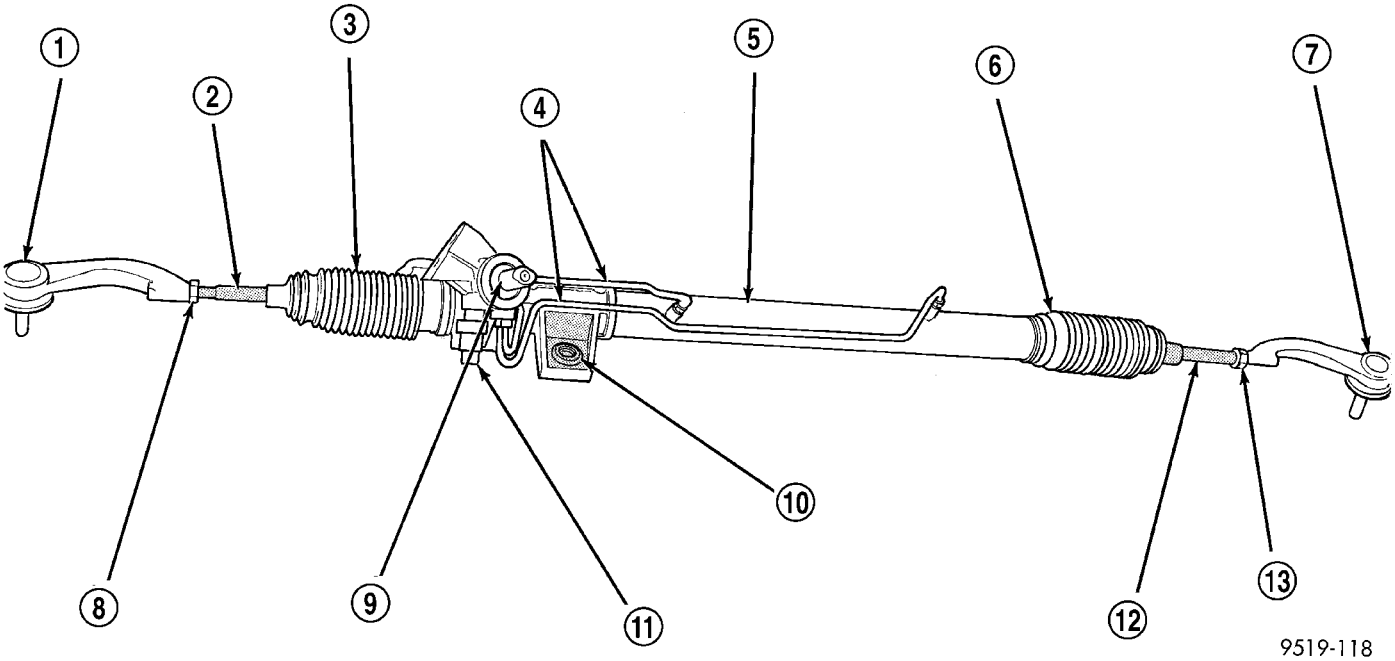

Fig. 1 Power Steering Gear

1 - TIE ROD END
2 - INNER TIE ROD
3 - STEERING GEAR BOOT
4 - STEERING GEAR FLUID LINES
5 - POWER STEERING GEAR HOUSING
6 - STEERING GEAR BOOT
7 - TIE ROD END
8 - JAM NUT
9 - STEERING GEAR SHAFT
10 - MOUNTING BUSHING
11 - POWER STEERING PRESSURE SWITCH
12 - INNER TIE ROD
13 - JAM NUT

GEAR (Continued)

Road feel is controlled by the diameter of a torsion bar which initially steers the vehicle. This movement directs fluid behind the integral rack piston, which, in turn, builds up hydraulic pressure and assists in the turning effort.

The drive tangs on the gear pinion mate loosely with a stub shaft. This is to permit manual steering control to be maintained if the drive belt on the power steering pump should break. However, under these conditions, steering effort will be increased.

REMOVAL

NOTE: Before proceeding, review Warnings and Cautions.(Refer to 19 - STEERING - WARNING)(Refer to 19 - STEERING - CAUTION)

(1) Remove remote ground cable from ground stud on left shock tower. Then correctly isolate ground cable from vehicle by installing isolator on stud (Fig. 2).

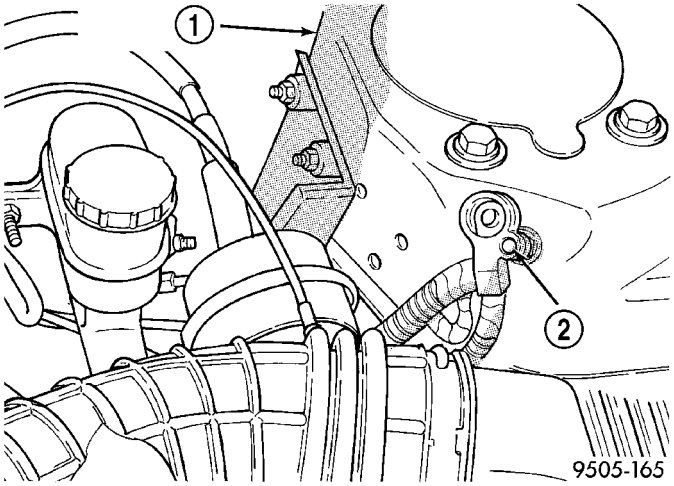

Fig. 2 Correctly Isolated Remote Ground Cable

1 - LEFT STRUT TOWER
2 - GROUND STUD

(2) Siphon as much power steering fluid as possible from remote power steering fluid reservoir.

(3) Place steering wheel and front wheels in STRAIGHT-AHEAD position. Lock steering wheel in this position using a steering wheel holder.

(4) Under instrument panel, disconnect intermediate shaft from steering gear shaft. To do so, remove pinch bolt from intermediate shaft coupler (Fig. 3), then slide intermediate shaft up and off steering gear shaft.

(5) Raise vehicle. (Refer to LUBRICATION & MAINTENANCE/HOISTING - STANDARD PROCEDURE)

(6) Remove both front wheel and tire assemblies.

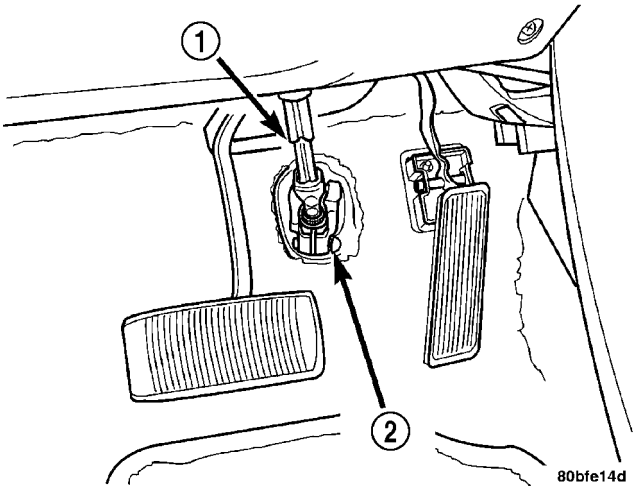

Fig. 3 Intermediate Shaft Attachment

1 - INTERMEDIATE SHAFT
2 - PINCH BOLT

(7) Remove fasteners attaching drive belt splash shield to crossmember.

(8) Remove nuts attaching both outer tie rod ends to steering knuckles. **Remove tie rod end nuts by holding tie rod end stud with a socket while loosening and removing nut with wrench (Fig. 4).**

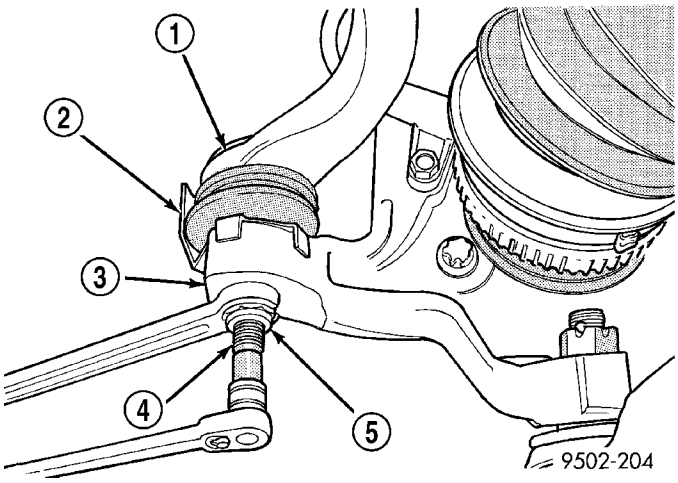

Fig. 4 Removing Tie Rod End Nut

1 - TIE ROD
2 - HEAT SHIELD
3 - STEERING KNUCKLE
4 - TIE ROD STUD
5 - NUT

(9) Remove both tie rod end studs from steering knuckles using Remover, Special Tool C-3894-A.

GEAR (Continued)

CAUTION: This vehicle is designed and assembled using NET BUILD front suspension alignment settings. This means that front suspension alignment settings are determined as the vehicle is designed by the location of front suspension components in relation to the vehicle body. This process is carried out when building the vehicle by accurately locating the front suspension crossmember to master gage holes located in the underbody of the vehicle. Consequently, whenever the front suspension crossmember is removed from a vehicle, it MUST be replaced in the same location on the body of the vehicle it was removed from to keep the alignment settings the same. Therefore, before removing the front suspension crossmember from the vehicle, locating marks for the front suspension crossmember MUST be scribed on the front suspension crossmember and body of vehicle as described in the following steps. If location of front suspension crossmember to body is not maintained when vehicle is assembled, vehicle handling and or tire wear problems may occur.

(10) Using an awl, scribe lines on vehicle body marking front-to-rear and side-to-side location where front suspension crossmember is mounted against body. This type line should be scribed at all locations where the crossmember is mounted to the vehicle on each side of the vehicle.

(11) Remove stabilizer bar bushing clamp-**to-body** attaching bolts (Fig. 5). Stabilizer bar bushing clamp-**to-crossmember** bolts do not need to be removed.

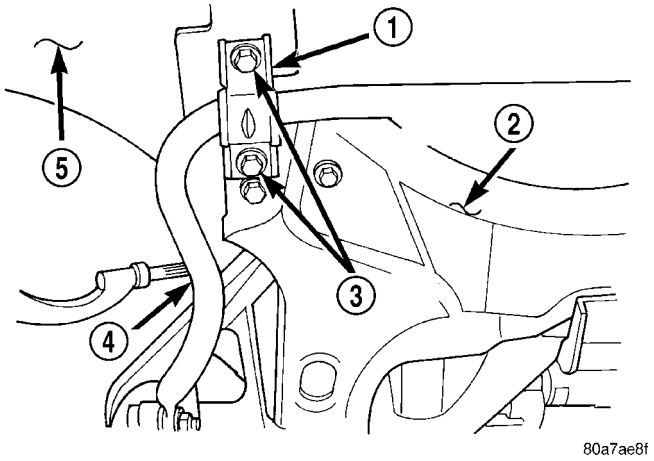

Fig. 5 Stabilizer Bar Bushing Clamp Attaching Bolts

1 - STABILIZER BAR BUSHING CLAMP
2 - FRONT SUSPENSION CROSSMEMBER
3 - ATTACHING BOLTS
4 - STABILIZER BAR
5 - VEHICLE BODY

(12) Remove bolts attaching shock absorber clevis to left and right lower control arms (Fig. 6).

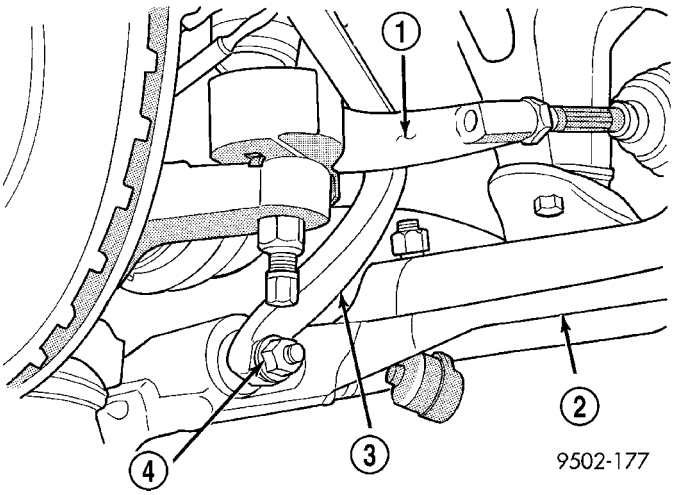

Fig. 6 Shock Clevis To Lower Control Arm Bolts

1 - TIE ROD
2 - LOWER CONTROL ARM
3 - SHOCK ABSORBER CLEVIS
4 - THRU-BOLT

(13) Remove 3 bolts attaching rear engine mount to crossmember (Fig. 7). **If equipped, manual transmission bracket will come down when these bolts are removed. It may be necessary to loosen damper mounting bolt at engine structural collar to allow bracket and damper to swing down sufficiently (Fig. 7).**

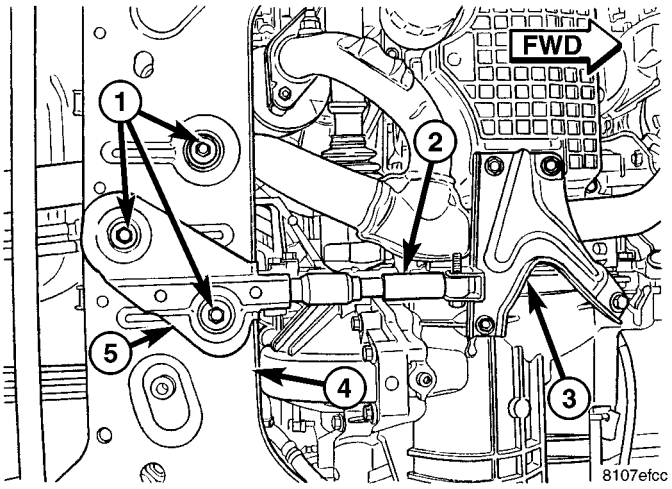

Fig. 7 Damper Mounting

1 - ENGINE MOUNT BOLTS
2 - DAMPER
3 - STRUCTURAL COLLAR
4 - FRONT SUSPENSION CROSSMEMBER
5 - TRANSMISSION BRACKET

(14) Remove fasteners securing steering gear heat shield to crossmember (Fig. 8).

(15) Remove screws fastening power steering pressure hose to crossmember (Fig. 8).

GEAR (Continued)

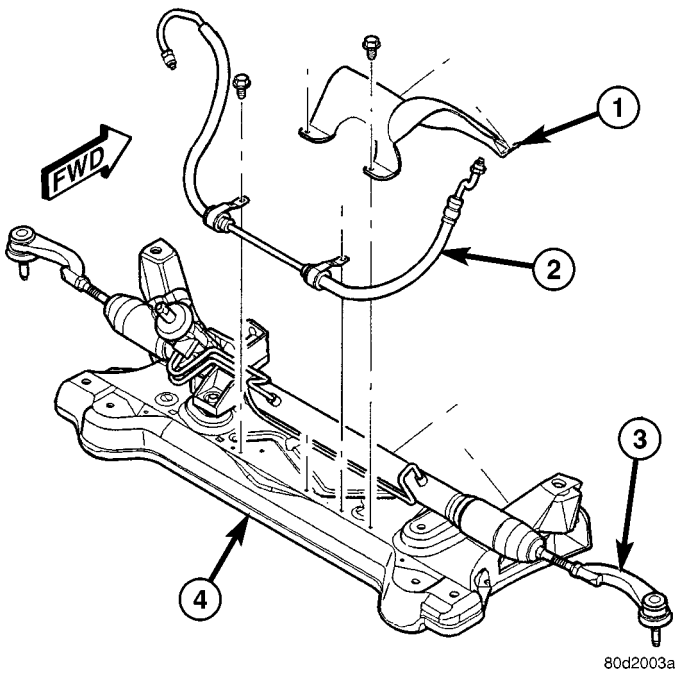

Fig. 8 Pressure Hose Mounting To Crossmember

1 - HEAT SHIELD (TYPICAL)
2 - PRESSURE HOSE
3 - POWER STEERING GEAR
4 - FRONT SUSPENSION CROSSMEMBER

(16) Remove brake tube routing bracket from left lower control arm rear mounting bolt.

(17) Disconnect fuel tube bundle routing support above crossmember.

(18) Position transmission jack under center of front suspension crossmember to support it.

(19) On each side of the vehicle, remove the 2 bolts attaching the front and rear of the front suspension crossmember to the frame rails of vehicle (Fig. 9).

(20) Using transmission jack, lower front suspension crossmember enough to allow steering gear to be removed from crossmember. **When lowering front suspension crossmember, do not let crossmember hang from lower control arms, weight of crossmember must be supported by transmission jack.**

(21) Remove power steering pressure and return hoses from the power steering gear fluid ports (Fig. 10).

(22) Remove wiring harness connector from power steering fluid pressure switch.

(23) Remove 4 bolts fastening power steering gear to front suspension crossmember.

(24) Remove power steering gear from front suspension crossmember.

(25) Transfer required parts from removed gear to replacement gear if a new gear is being installed.

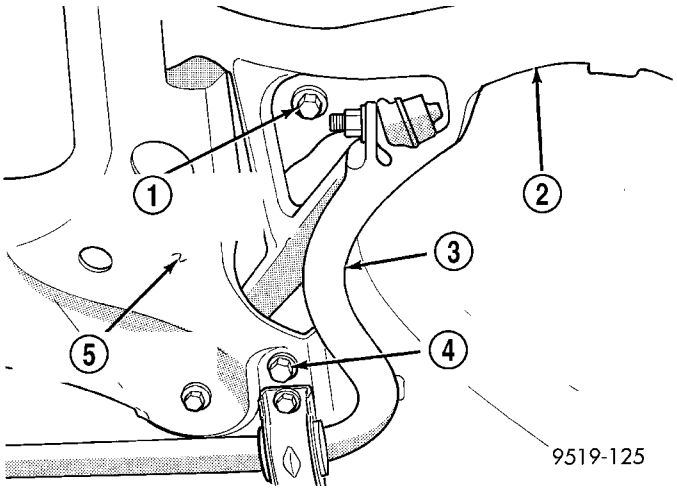

Fig. 9 Crossmember To Body Attaching Bolts

1 - CROSSMEMBER FRONT MOUNTING BOLT
2 - LOWER CONTROL ARM
3 - STABILIZER BAR
4 - CROSSMEMBER REAR MOUNTING BOLT
5 - FRONT SUSPENSION CROSSMEMBER

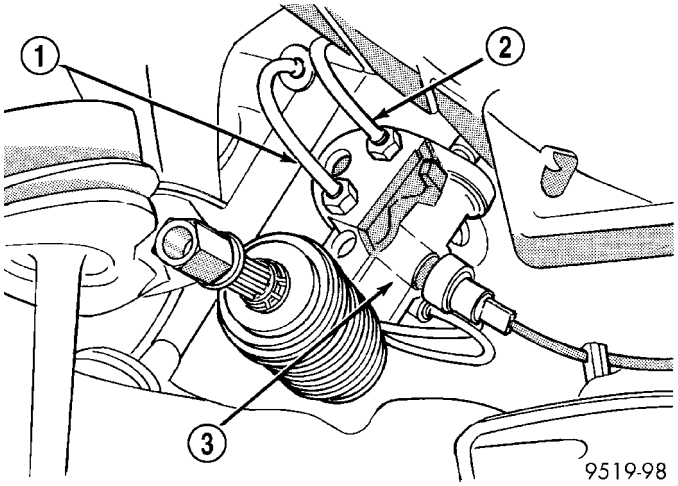

Fig. 10 Power Steering Pressure And Return Hose At Steering Gear

1 - POWER STEERING PRESSURE HOSE
2 - POWER STEERING RETURN HOSE
3 - POWER STEERING GEAR

DISASSEMBLY

(1) Using a screwdriver, pry the sleeve out of the mounting bolt isolator (Fig. 11).

(2) Pry the mounting bolt isolator bushing from the steering gear mounting bracket.

ASSEMBLY

(1) Lubricate replacement mounting bolt isolator bushing using Mopar, Silicone Spray Lube or an equivalent.

(2) Install the mounting bolt isolator bushing into the steering gear mounting bracket from the bottom side of the bracket (Fig. 12).

GEAR (Continued)

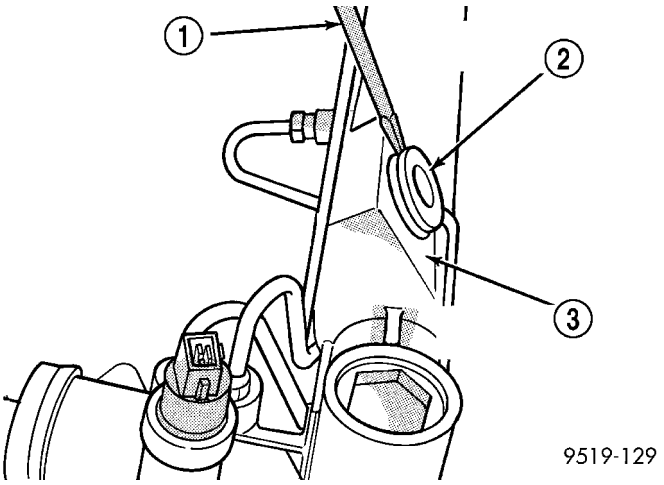

Fig. 11 Mounting Bolt Isolator Sleeve Removal

1 - SCREWDRIVER
2 - ISOLATOR BUSHING SLEEVE
3 - STEERING GEAR MOUNTING BRACKET

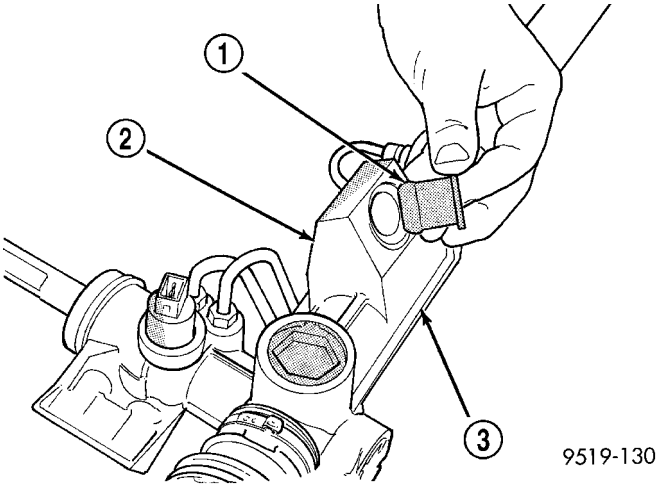

Fig. 12 Installing Mounting Bolt

1 - STEERING GEAR MOUNTING BOLT ISOLATOR BUSHING
2 - STEERING GEAR MOUNTING BRACKET
3 - STEERING GEAR

(3) Install mounting bolt isolator bushing sleeve into isolator bushing by pressing the sleeve into the bushing by hand (Fig. 13).

INSTALLATION

(1) Install power steering gear on front suspension crossmember. Install all four steering gear mounting bolts. Tighten bolts to a torque of 68 N·m (50 ft. lbs.).

(2) Install power steering fluid pressure and return hoses to ports of power steering gear (Fig. 10). Tighten power steering fluid pressure and return hose tube nuts to a torque of 31 N·m (275 in. lbs.).

(3) Using transmission jack, raise front suspension crossmember and steering gear against body of vehicle.

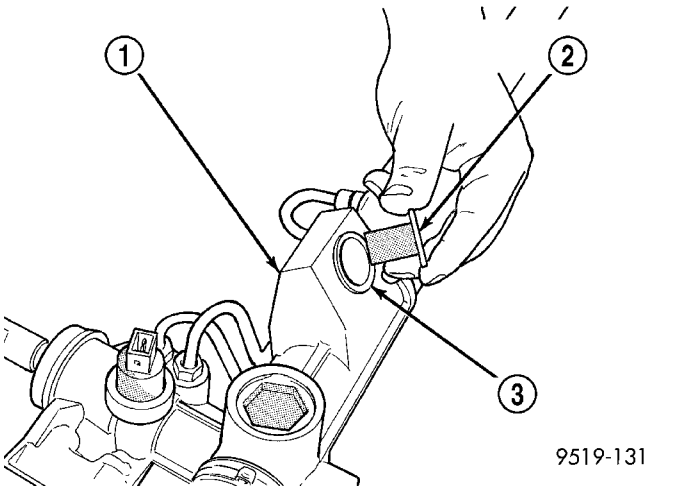

Fig. 13 Mounting Bolt Isolator Sleeve Installation

1 - STEERING GEAR MOUNTING BRACKET
2 - ISOLATOR BUSHING SLEEVE
3 - STEERING GEAR MOUNTING BOLT ISOLATOR BUSHING

CAUTION: When front suspension crossmember is installed back in vehicle, crossmember MUST be aligned with positioning marks previously scribed into body of vehicle. This MUST be done to maintain NET BUILD front suspension alignment settings.

(4) Start two rear mounting bolts into body tapping plates attaching front suspension crossmember to body of vehicle. Then install two front bolts attaching front suspension crossmember to frame rails of vehicle. Tighten all four mounting bolts evenly until front suspension crossmember is against body of vehicle at all four mounting points. Tighten bolts to approximately 2 N·m (20 in. lbs.) torque to hold front suspension crossmember in position. Do not overtighten.

(5) Using a soft face hammer, tap front suspension crossmember into position until it is aligned with previously scribed positioning marks on body of vehicle.

(6) Once front suspension crossmember is correctly positioned, tighten two rear crossmember mounting bolts to 163 N·m (120 ft. lbs.) torque. Then tighten two front crossmember to frame rail attaching bolts to 163 N·m (120 ft. lbs.) torque.

(7) Lower transmission jack.

(8) Connect fuel tube bundle routing support above crossmember.

(9) Install brake tube routing bracket onto left lower control arm rear mounting bolt threads.

(10) Install screws fastening power steering pressure hose routing clamps to crossmember (Fig. 8). Tighten screws to 45 N·m (33 ft. lbs.) torque.

(11) Position steering gear heat shield on crossmember and install fasteners (Fig. 8).

GEAR (Continued)

(12) Install 3 bolts attaching rear engine mount to crossmember (Fig. 7). **If equipped, make sure manual transmission bracket is positioned in place before installing bolts (Fig. 7).** Tighten bolts to 65 N·m (48 ft. lbs.) torque.

(13) Loosely install two shock absorber clevis-to-lower control arm thru-bolts and nuts (Fig. 6). Do not tighten bolts at this time.

(14) Install tie rod seal boot heat shield on tie rod end (Fig. 14).

(15) Install tie rod end into steering knuckle. Start tie rod end-to-steering knuckle attaching nut onto tie rod stud. While holding stud stationary, tighten nut. To properly torque nut, use a crowfoot and socket as shown and tighten nut to 55 N·m (40 ft. lbs.) torque (Fig. 14).

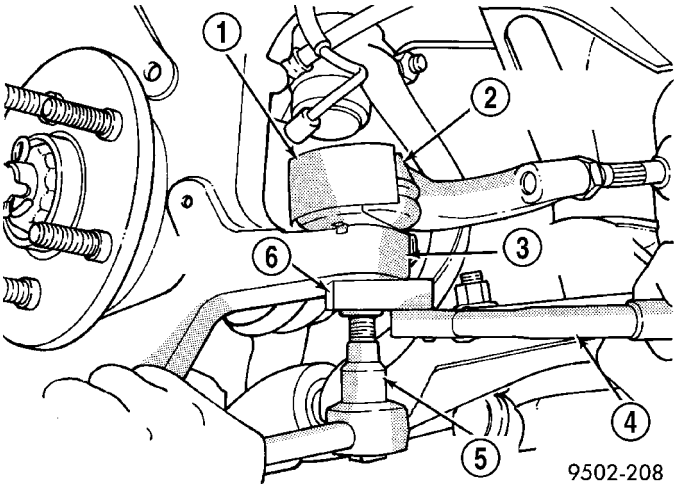

Fig. 14 Torquing Tie Rod End Attaching Nut

1 - HEAT SHIELD
2 - OUTER TIE ROD
3 - STEERING KNUCKLE
4 - TORQUE WRENCH
5 - 11/32 SOCKET
6 - CROWFOOT

(16) Install and tighten two stabilizer bar bushing clamp-to-body attaching bolts to 61 N·m (45 ft. lbs.) torque.

(17) Install fasteners attaching drive-belt splash shield to crossmember.

CAUTION: When supporting lower control arm with jack stand, do not position jack stand under the ball joint cap on the lower control arm. Position in area of lower control arm shown in (Fig. 15).

(18) Lower vehicle and support front end of vehicle by positioning jack stands as shown at each lower control arm as vehicle is lowered (Fig. 15). Continue to lower vehicle until total front end weight is supported by jack stands.

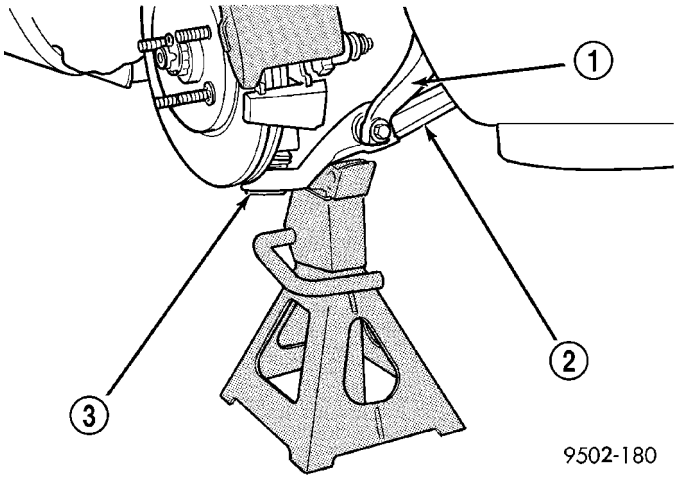

Fig. 15 Lower Control Arm Correctly Supported By Jack Stand

1 - SHOCK ABSORBER CLEVIS
2 - LOWER CONTROL ARM
3 - BALL JOINT CAP

(19) Tighten shock absorber clevis-to-lower control arm bushing thru-bolts to a torque of 92 N·m (68 ft. lbs.).

(20) Raise vehicle and remove jack stands.

(21) Install wheel and tire assemblies. Progressively tighten wheel nuts in a criss-cross tightening sequence to 135 N·m (100 ft. lbs.) torque.

CAUTION: Before connecting the steering column intermediate shaft coupler to the steering gear shaft, position the front wheels STRAIGHT-AHEAD. The steering wheel must also be in the centered position.

(22) Under instrument panel, align splines inside intermediate shaft lower coupling with splines on steering gear shaft and slide intermediate shaft onto steering gear. Install a NEW coupling pinch bolt (Fig. 3) and tighten it to a torque of 44 N·m (32 ft. lbs.).

(23) Remove steering wheel holder.

(24) Install remote battery ground cable on ground stud located on left shock tower.

(25) Fill power steering pump fluid reservoir to proper level and perform Power Steering Pump Initial Operation standard procedure. (Refer to 19 - STEERING/PUMP - STANDARD PROCEDURE)

(26) Check for leaks.

(27) Lower vehicle.

(28) Check front wheel alignment and adjust toe setting (Refer to 2 - SUSPENSION/WHEEL ALIGNMENT - STANDARD PROCEDURE). Tighten tie rod jam nuts to 74 N·m (55 ft. lbs.) torque.

POWER STEERING PRESSURE SWITCH

DESCRIPTION

On vehicles equipped with a 2.0L four cylinder engine, a power steering pressure switch (Fig. 16) is used to improve the vehicle's idle quality when required (Other four cylinder engine models use a virtual power steering switch (VPSS) built into the vehicle's electronics). When a demand for power assist is put on the power steering system at idle, pump pressure puts additional load on the engine, thus decreasing engine idle speed. The pressure switch improves vehicle idle quality by maintaining the required engine idle speed when the pressure rises in the power steering system.

The power steering pressure switch is mounted directly to the power steering gear (Fig. 16).

OPERATION

The pressure switch functions by signaling the powertrain control module that the power steering system is putting additional load on the engine. This type of condition exists when turning the front tires of the vehicle when the vehicle is stationary and the engine is at idle speed. When this condition is sensed by the power train control module, through a signal from the power steering pressure switch, engine idle speed will be maintained. The maintained engine idle speed compensates for the additional load, thus maintaining the require engine idle speed and idle quality.

REMOVAL

(1) Disconnect the negative cable from the battery. Be sure cable is isolated from negative post on battery.

(2) Raise vehicle.

(3) Locate power steering pressure switch on back side of power steering gear (Fig. 16).

(4) Remove the wiring harness connector from the power steering pressure switch.

(5) Using a crow foot and long extension, remove power steering pressure switch, from power steering gear.

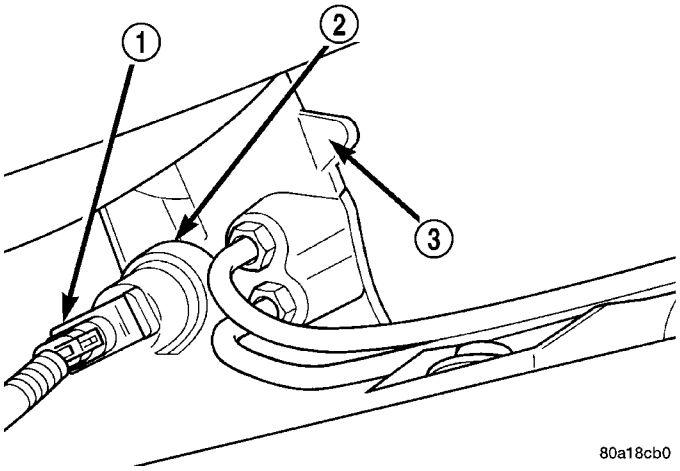

Fig. 16 Power Steering Pressure Switch Location

1 - WIRING HARNESS CONNECTOR
2 - POWER STEERING PRESSURE SWITCH
3 - POWER STEERING GEAR

INSTALLATION

CAUTION: When tightening the power steering pressure switch after installation in steering gear, do not exceed the torque specification shown in step 1 below. Over-tightening may result in stripping the threads out of the pressure switch port on the steering gear.

(1) Install power steering pressure switch into power steering gear by hand until fully seated. Then using a crow foot and extension, tighten power steering pressure switch to 16 N·m (12 ft. lbs.) torque.

(2) Install wiring harness connector on power steering pressure switch (Fig. 16). Be sure latch on wiring harness connector is fully engaged with locking tab on power steering pressure switch.

(3) Fill power steering reservoir to correct fluid level.

(4) Connect negative cable back on negative post of battery.

(5) Start engine and turn steering wheel several times from stop to stop to bleed air from fluid in system. Stop engine, check fluid level, and inspect system for leaks.

TIE ROD - OUTER

REMOVAL

(1) Raise vehicle. (Refer to LUBRICATION & MAINTENANCE/HOISTING - STANDARD PROCEDURE)

(2) Remove wheel and tire assembly.

(3) Loosen inner tie rod-to-outer tie rod jam nut (Fig. 17).

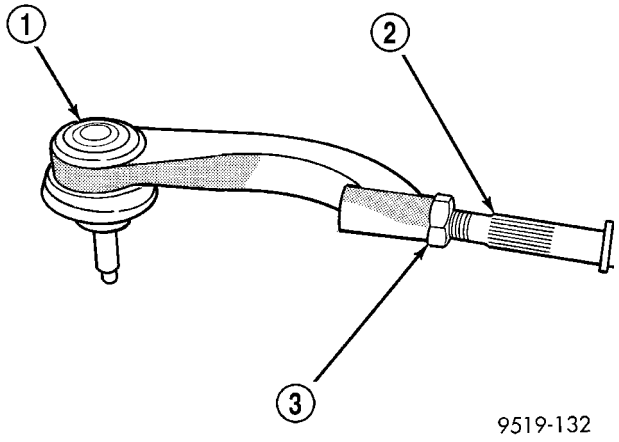

Fig. 17 Tie Rod Jam Nut

1 - OUTER TIE ROD
2 - INNER TIE ROD
3 - JAM NUT

(4) Remove nut attaching outer tie rod to steering knuckle (Fig. 18). **Nut is removed from tie rod by holding tie rod stud with a socket while loosening and removing nut with wrench.**

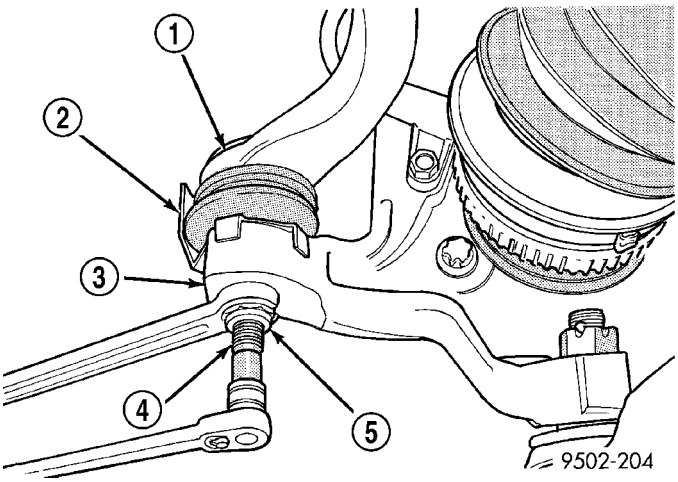

Fig. 18 Removing Outer Tie Rod Nut

1 - TIE ROD
2 - HEAT SHIELD
3 - STEERING KNUCKLE
4 - TIE ROD STUD
5 - NUT

(5) Remove tie rod stud from steering knuckle using Remover, Special Tool C-3894-A.

(6) Remove outer tie rod from inner tie rod by unthreading it.

INSTALLATION

(1) Thread outer tie rod onto inner tie rod. **Make sure jam nut is on inner tie rod before installing outer tie rod.** Do not tighten jam nut at this time.

(2) Install tie rod end seal boot heat shield on the tie rod end (Fig. 18).

(3) Install outer tie rod into steering knuckle. Start tie rod-to-steering knuckle attaching nut onto tie rod stud. While holding tie rod stud stationary using a socket, use a crowfoot on a torque wrench to tighten tie rod nut to 61 N·m (45 ft. lbs.) torque (Fig. 19).

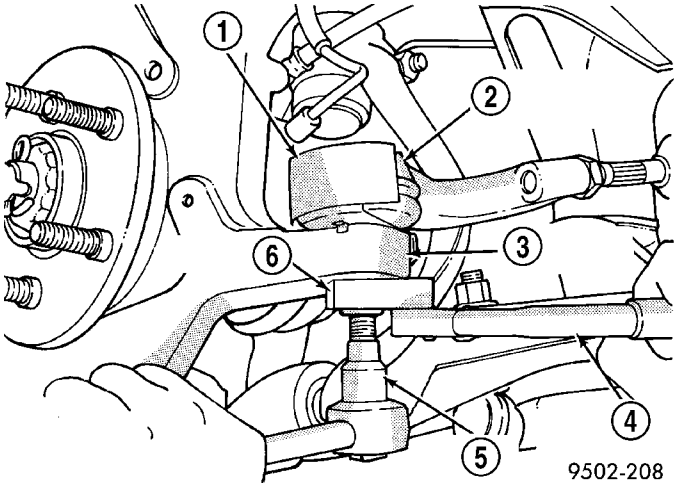

Fig. 19 Torquing Tie Rod Nut

1 - HEAT SHIELD
2 - OUTER TIE ROD
3 - STEERING KNUCKLE
4 - TORQUE WRENCH
5 - 11/32 SOCKET
6 - CROWFOOT

CAUTION: During the following step, do not allow the steering gear boot to become twisted.

(4) Tighten tie rod jam nut (Fig. 17) to 75 N·m (55 ft. lbs.) torque.

(5) Install tire and wheel assembly. Progressively tighten the wheel nuts in a criss-cross tightening sequence to 135 N·m (100 ft. lbs.) torque.

(6) Lower vehicle.

(7) Adjust front wheel alignment toe setting. (Refer to 2 - SUSPENSION/WHEEL ALIGNMENT - STANDARD PROCEDURE)

PUMP

TABLE OF CONTENTS

page

PUMP
DESCRIPTION 29
OPERATION 29
STANDARD PROCEDURE - POWER STEERING PUMP INITIAL OPERATION 30
REMOVAL
REMOVAL - PUMP (2.0L/2.4L ENGINE) 30
REMOVAL - PUMP (2.7L ENGINE) 31
DISASSEMBLY - PUMP (PULLEY) 32
ASSEMBLY - PUMP (PULLEY) 32
INSTALLATION
INSTALLATION - PUMP (2.0L/2.4L ENGINE) . 33
INSTALLATION - PUMP (2.7L ENGINE) 34
FLUID
STANDARD PROCEDURE - POWER STEERING FLUID LEVEL CHECKING 34
HOSE - PRESSURE
REMOVAL 34
INSTALLATION 35
HOSE - RETURN
REMOVAL 35
INSTALLATION 37
HOSE - SUPPLY
REMOVAL 37
INSTALLATION 38
RESERVOIR
DESCRIPTION 38
REMOVAL 38
INSTALLATION 39

PUMP

DESCRIPTION

All vehicles are equipped with power steering. The hydraulic pressure for operation of the power steering gear is provided by a belt driven power steering pump (Fig. 1) (Fig. 2). The pump is a constant flow rate and displacement vane type power steering pump.

The power steering pump is mounted on the back side of the engine, above the front suspension cross-member.

The power steering pump uses a remote mounted reservoir for storage of the power steering fluid.

Because of unique shaft bearings, flow control levels or pump displacements, power steering pumps may be used only on specific vehicle applications. Be sure that the power steering pump is only replaced with a pump that is the correct replacement for that specific application.

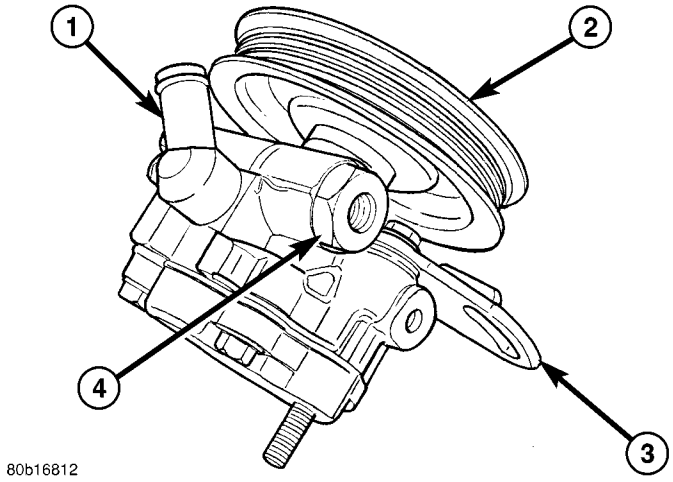

Fig. 1 Power Steering Pump - 2.4L Engine

1 - SUPPLY FITTING
2 - PULLEY
3 - MOUNTING BRACKET
4 - PRESSURE FITTING

OPERATION

Hydraulic pressure is provided for operation of the power steering gear by the belt driven power steering pump. The power steering pump is connected to the steering gear by a power steering fluid pressure hose, return hose, power steering fluid cooler and remote power steering fluid reservoir.

Rectangular pumping vanes in the shaft driven rotor move power steering fluid from the intake to the cam ring pressure cavities of the power steering pump. As the rotor begins to turn, centrifugal force throws the vanes against the inside surface of the cam ring to pick up residual oil. This oil is then forced into the high pressure area. As more oil is picked up by the vanes, the additional oil is forced into the cavities of the thrust plate through two crossover holes in the cam ring and pressure plate. The crossover holes empty into the high pressure area between the pressure plate and the housing end cover.

PUMP (Continued)

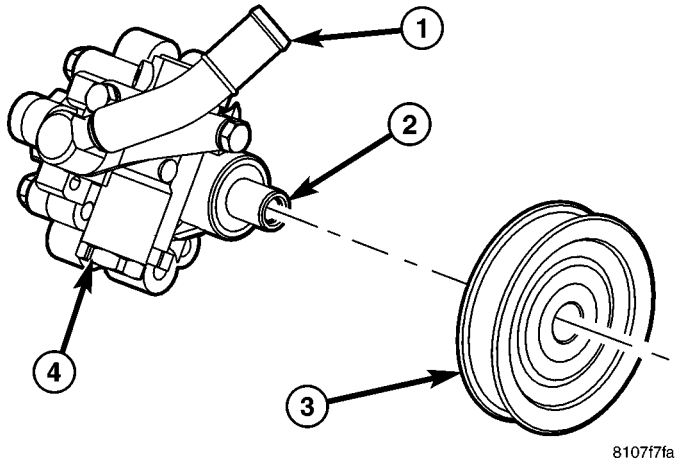

Fig. 2 Power Steering Pump - 2.7L Engine

1 - SUPPLY FITTING
2 - PUMP SHAFT
3 - PULLEY
4 - PRESSURE FITTING

As the high pressure area is filled, oil flows under the vanes in the rotor slots, forcing the vanes to follow the inside surface of the cam ring. As the vanes reach the restricted area of the cam ring, oil is forced out from between the vanes. When excess oil flow is generated during high-speed operation, a regulated amount of oil returns to the pump intake side through a flow control valve. The flow control valve reduces the power required to drive the pump and holds down temperature build-up.

When steering conditions exceed maximum pressure requirements, such as when the wheels are turned against the stops, the pressure built up in the steering gear exerts pressure on the spring end of the flow control valve inside the pump. The high pressure lifts the relief valve ball from its seat and allows oil to flow through a trigger orifice located in the outlet fitting. This reduces pressure on the spring end of the flow control valve which then opens and allows the oil to return to the intake side of the pump. This action limits maximum pressure output of the power steering pump.

Under normal power steering pump operating conditions, pressure requirements of the pump are below maximum, causing the pressure relief valve to remain closed.

In the event of a power steering pump drive belt failure, manual steering control of the vehicle can still be maintained without pump assistance. However, under these conditions, steering effort will be significantly increased.

STANDARD PROCEDURE - POWER STEERING PUMP INITIAL OPERATION

CAUTION: The fluid level should be checked with engine off to prevent injury from moving components. Use only Mopar® ATF+4 Automatic Transmission Fluid (MS-9602). Do not overfill.

(1) Wipe the reservoir fill cap clean before removal.

(2) Fill the pump fluid reservoir to the proper level. The fluid level should be within the “FILL RANGE” listed on the exterior of the reservoir when the fluid is at normal ambient temperature, approximately 21°C to 27°C (70°F to 80°F).

(3) Let the fluid settle in the system for at least two (2) minutes.

(4) Start the engine and let run for a few seconds. Then turn the engine off.

(5) Add fluid if necessary. Repeat the above procedure until the fluid level remains constant after running the engine.

(6) Raise the front wheels off the ground.

(7) Start the engine. Slowly turn the steering wheel right and left, lightly contacting the wheel stops.

(8) Add power steering fluid if necessary.

(9) Lower the vehicle and turn the steering wheel slowly from lock to lock.

(10) Stop the engine. Check the fluid level and refill as required.

(11) If the fluid is extremely foamy, allow the vehicle to stabilize a few minutes, then repeat the above procedure.

REMOVAL

REMOVAL - PUMP (2.0L/2.4L ENGINE)

WARNING: POWER STEERING FLUID, ENGINE COMPONENTS AND EXHAUST SYSTEM MAY BE EXTREMELY HOT IF ENGINE HAS BEEN RUNNING. DO NOT START ENGINE WITH ANY LOOSE OR DISCONNECTED HOSES, OR ALLOW HOSES TO TOUCH HOT EXHAUST MANIFOLD OR CATALYST.

(1) Remove battery cable from negative (-) post on battery and isolate cable.

(2) Siphon as much power steering fluid as possible out of the remote power steering fluid reservoir.

(3) Remove the clamp, then fluid supply hose from fitting on pump. Install a cap on fitting.

(4) Raise vehicle. (Refer to LUBRICATION & MAINTENANCE/HOISTING - STANDARD PROCEDURE)

(5) Remove the accessory drive splash shield.

PUMP (Continued)

(6) Remove power steering fluid pressure hose from pressure fitting on power steering pump (Fig. 3). Let power steering fluid drain out of system. **After power steering fluid has drained out of pump and hose, install a cap on the power steering pressure hose and a plug in the power steering pump pressure fitting.**

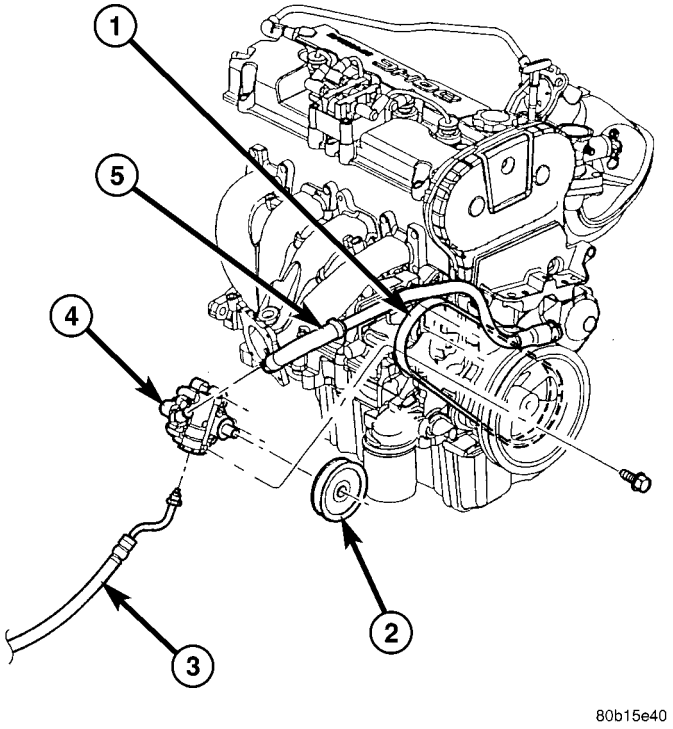

Fig. 3 PUMP MOUNTING TO ENGINE

1 - DRIVE BELT
2 - PULLEY
3 - PRESSURE HOSE
4 - POWER STEERING PUMP
5 - SUPPLY HOSE

(7) Remove bolt at adjustment slot in pump front mounting bracket.

(8) Remove nut at adjustment slot in cast aluminum mounting bracket at rear of pump.

(9) Loosen pump upper pivot bolt.

(10) Remove pump drive belt.

(11) Remove pump upper pivot bolt.

(12) Remove power steering pump and its front mounting bracket as an assembly from the engine through opening above right drive shaft and below right frame rail.

(13) To remove the pulley or bracket, (Refer to 19 - STEERING/PUMP - DISASSEMBLY).

REMOVAL - PUMP (2.7L ENGINE)

WARNING: POWER STEERING FLUID, ENGINE COMPONENTS AND EXHAUST SYSTEM MAY BE EXTREMELY HOT IF ENGINE HAS BEEN RUNNING. DO NOT START ENGINE WITH ANY LOOSE OR DISCONNECTED HOSES, OR ALLOW HOSES TO TOUCH HOT EXHAUST MANIFOLD OR CATALYST.

(1) Remove battery cable from (-) negative post on battery and isolate cable.

(2) Siphon as much power steering fluid as possible out of power steering fluid reservoir.

(3) Remove power steering fluid supply hose from power steering pump supply fitting (Fig. 4).

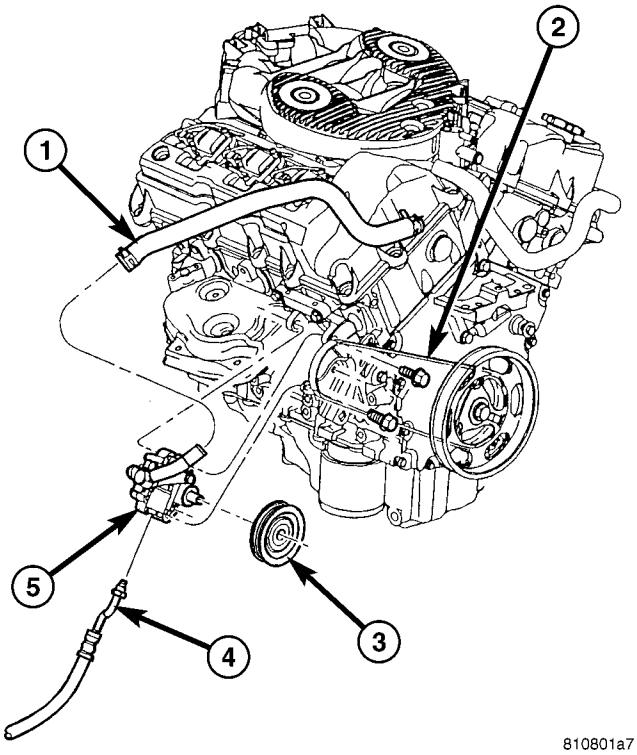

Fig. 4 Pump Mounting To Engine (2.7L)

1 - SUPPLY HOSE
2 - DRIVE BELT
3 - PULLEY
4 - PRESSURE HOSE
5 - POWER STEERING PUMP

(4) Raise vehicle. (Refer to LUBRICATION & MAINTENANCE/HOISTING - STANDARD PROCEDURE)

(5) Remove accessory drive splash shield.

(6) Remove power steering fluid pressure hose from fitting on power steering pump (Fig. 4).

(7) Remove oxygen sensor harness and clip from rear of pump.

(8) Completely remove bolt at slot in stamped pump adjuster bracket (Fig. 5) and remove power steering drive belt.

(9) Pivot pump out past full-adjust position. This will allow access to two pump bracket-to-engine mounting bolts.

PUMP (Continued)

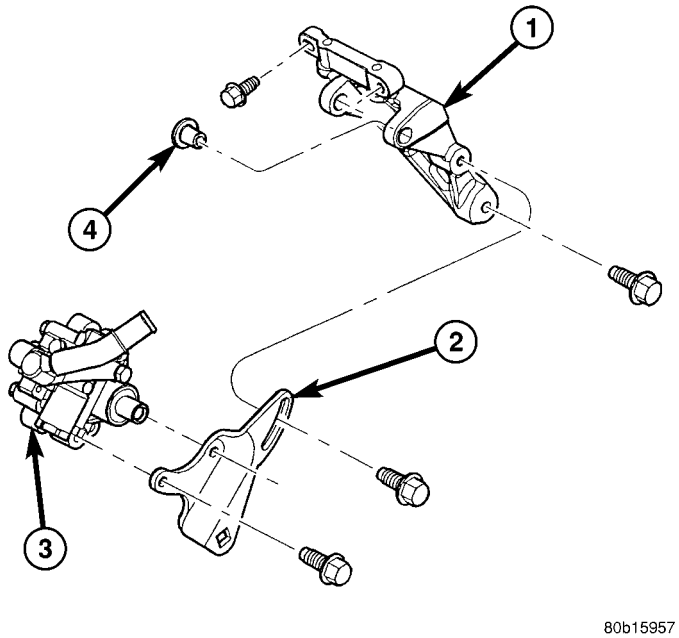

Fig. 5 Pump Bracket Mounting - 2.7L Engine

1 - CAST PUMP MOUNTING BRACKET
2 - STAMPED PUMP ADJUSTER BRACKET
3 - POWER STEERING PUMP
4 - PIVOT BUSHING

(10) Remove three bolts fastening cast power steering pump bracket to the engine (Fig. 5).

(11) Remove power steering pump, pulley and brackets as an assembly from the engine. Remove pump through opening between frame rail and right driveshaft.

(12) Remove stamped adjuster bracket mounting bolts. Remove bracket from pump.

(13) Remove two pivot bolts. Remove cast mounting bracket from pump.

(14) For removal of pulley, (Refer to 19 - STEERING/PUMP - DISASSEMBLY).

DISASSEMBLY - PUMP (PULLEY)

(1) Remove power steering pump from engine. (Refer to 19 - STEERING/PUMP - REMOVAL)

CAUTION: Do not hammer on power steering pump pulley or shaft to remove power steering pump pulley. This will damage the pulley and the power steering pump.

(2) Mount Puller, Special Tool C-4333, on power steering pump pulley. Mount puller (with power steering pump) in a vise (Fig. 6). This will keep shaft of power steering pump from turning while removing pulley.

(3) Tighten puller and remove pulley from shaft of power steering pump.

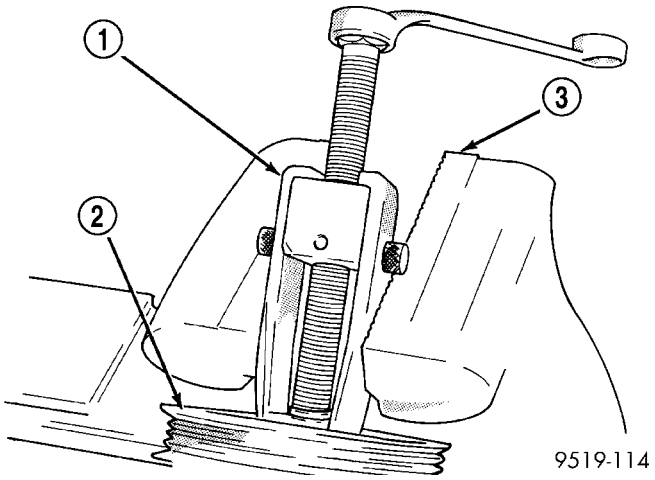

Fig. 6 Removing Pulley From Power Steering Pump Shaft

1 - SPECIAL TOOL C-4333
2 - POWER STEERING PUMP PULLEY
3 - VISE

NOTE: Replace power steering pump pulley if bent, cracked, or loose.

ASSEMBLY - PUMP (PULLEY)

CAUTION: Do not hammer on power steering pump pulley or shaft to install power steering pump pulley. This will damage the pulley and the power steering pump.

(1) Place power steering pump pulley squarely on end of power steering pump shaft (Fig. 7).

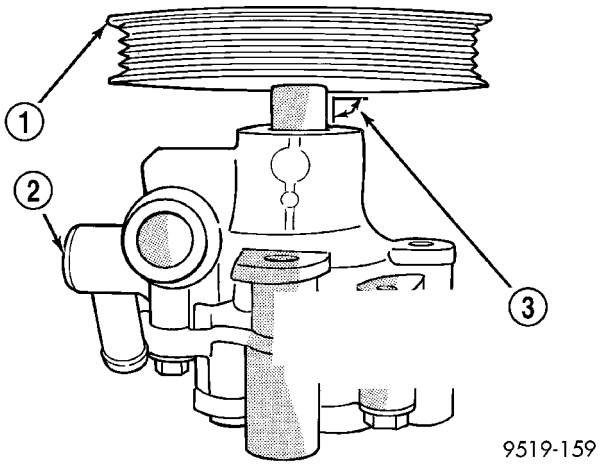

Fig. 7 Pulley Positioned On Shaft Of Power Steering Pump (Typical)

1 - POWER STEERING PUMP PULLEY
2 - POWER STEERING PUMP
3 - POWER STEERING PUMP PULLEY MUST BE STARTED SQUARELY ON SHAFT OF POWER STEERING PUMP AS SHOWN

PUMP (Continued)

(2) Place Installation Spacer (Fig. 8), Special Tool 6936, on top of the power steering pump pulley.

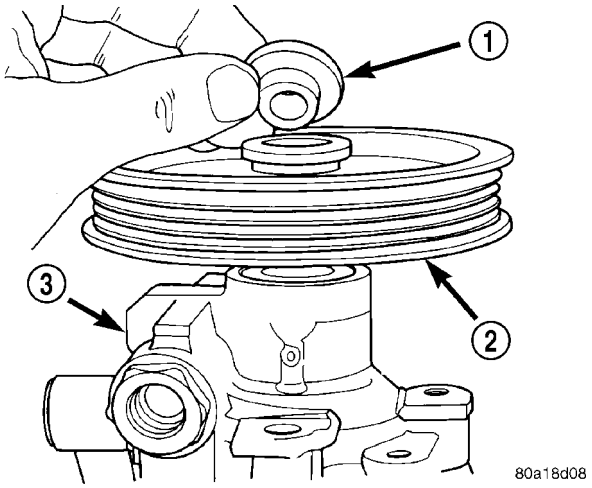

Fig. 8 Special Tool 6936 Installed On Pulley

1 - SPECIAL TOOL 6936
2 - POWER STEERING PUMP PULLEY
3 - POWER STEERING PUMP

(3) Mount Installer, Special Tool C-4063, in internal threads of the power steering pump shaft and against Special Tool 6936 on power steering pump pulley (Fig. 9).

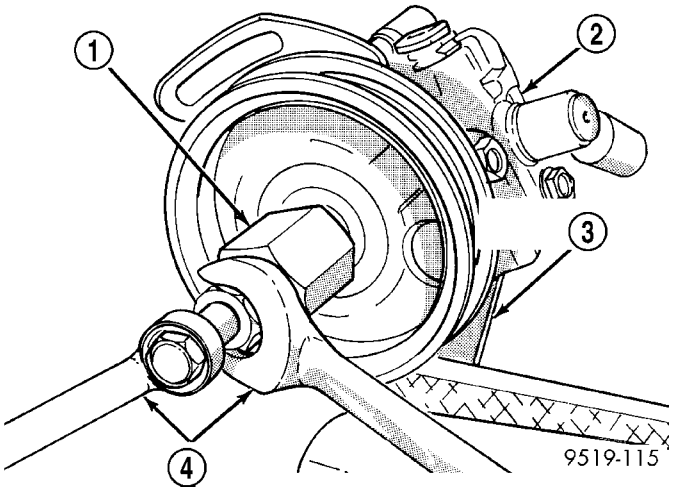

Fig. 9 Installing Pulley On Shaft Of Pump (Typical)

1 - SPECIAL TOOL C-4063
2 - POWER STEERING PUMP
3 - POWER STEERING PUMP BRACKET
4 - WRENCHES

(4) Ensuring that special tool and pulley remain aligned with pump shaft, force pulley onto power steering pump shaft until Special Tool 6936 is against the end of the power steering pump shaft. **When Special Tool 6936 is against the shaft of the power steering pump, Special Tool C-4063 will no longer be able to be turned.**

(5) Remove Installer from power steering pump.

(6) Install power steering pump and mounting bracket back on engine.(Refer to 19 - STEERING/ PUMP - INSTALLATION)

INSTALLATION

INSTALLATION - PUMP (2.0L/2.4L ENGINE)

WARNING: POWER STEERING FLUID, ENGINE COMPONENTS AND EXHAUST SYSTEM MAY BE EXTREMELY HOT IF ENGINE HAS BEEN RUNNING. DO NOT START ENGINE WITH ANY LOOSE OR DISCONNECTED HOSES, OR ALLOW HOSES TO TOUCH HOT EXHAUST MANIFOLD OR CATALYST.

(1) Install power steering pump and front mounting bracket as an assembly back in vehicle, using reverse order of removal.

(2) Install power steering pump and front bracket on the cast aluminum engine bracket. Loosely install the upper mounting pivot bolt.

(3) Loosely install the pump mounting bolt through the adjustment slot in the front mounting bracket.

(4) Loosely install the nut mounting the power steering pump to its rear mounting bracket adjustment slot.

(5) Install power steering pump drive belt on power steering pump pulley. Install a 1/2 in. breaker bar in the square adjusting hole in the front power steering pump mounting bracket and adjust belt. (Refer to 7 - COOLING/ACCESSORY DRIVE/DRIVE BELTS - ADJUSTMENTS)

(6) When correct drive belt tension is obtained, first tighten the two adjusting slot fasteners (one bolt, one nut) to a torque of 54 N·m (40 ft. lbs.). Next, tighten the power steering pump mounting bracket top pivot bolt to a torque of 54 N·m (40 ft. lbs.).

(7) Using a lint free towel, wipe clean all open power steering hose ends, and power steering pump fittings.

(8) Install a new O-ring on end of power steering pressure hose fitting. Lubricate all O-rings using fresh clean power steering fluid.

(9) Install the power steering pressure hose on the power steering pump pressure fitting (Fig. 3). Tighten the tube nut to a torque of 31 N·m (275 in. lbs.).

(10) Install accessory drive splash shield.

(11) Lower vehicle.

(12) Install power steering fluid supply hose on power steering pump supply fitting. Install hose clamp. Be sure hose clamp is installed on hose past upset bead on suction fitting.

(13) Connect negative (-) cable back on negative post of battery.

PUMP (Continued)

(14) Fill power steering reservoir to correct fluid level and perform Power Steering Pump Initial Operation standard procedure. (Refer to 19 - STEERING/PUMP - STANDARD PROCEDURE)

(15) Check for leaks at all hose connections and power steering pump.

INSTALLATION - PUMP (2.7L ENGINE)

(1) If previously removed, install cast mounting bracket on pump using two pivot bolts. Tighten bolts to a torque of 28 N·m (250 in. lbs.).

(2) If previously removed, install stamped adjuster bracket on pump using its mounting bolts. Tighten bolts to a torque of 28 N·m (250 in. lbs.).

(3) Install power steering pump, pulley and brackets as an assembly back in vehicle, using reverse of removal procedure.

(4) Install three bolts fastening cast pump mounting bracket to engine (Fig. 5). Tighten bolts to a torque of 28 N·m (250 in. lbs.).

(5) Loosely install bolt through stamped adjuster bracket slot and into cast bracket (Fig. 5).

(6) Using a lint free towel, wipe clean all open power steering hose ends, and power steering pump fittings.

(7) Install clip attaching oxygen sensor harness to rear of pump.

(8) Install power steering pump drive belt on pump pulley.

(9) Install a 1/2 inch breaker bar in square adjusting hole in front power steering pump mounting bracket and adjust belt. (Refer to 7 - COOLING/ACCESSORY DRIVE/DRIVE BELTS - ADJUSTMENTS)

(10) When correct drive belt tension is obtained, tighten adjusting slot bolt to a torque of 28 N·m (250 in. lbs.).

(11) Install a new O-ring on end of power steering pressure hose fitting. Lubricate all O-rings using fresh clean power steering fluid.

(12) Install power steering pressure hose on pump pressure fitting (Fig. 4). Tighten tube nut to a torque of 31 N·m (275 in. lbs.).

(13) Install accessory drive splash shield.

(14) Lower vehicle.

(15) Install power steering fluid supply hose on pump supply fitting (Fig. 4). Install hose clamp on hose. Be sure hose clamp is installed on hose past upset bead on power steering fluid reservoir.

(16) Connect battery cable back on negative (-) post of battery.

(17) Fill power steering reservoir to correct fluid level and perform Power Steering Pump Initial Operation standard procedure. (Refer to 19 - STEERING/PUMP - STANDARD PROCEDURE)

(18) Check for leaks at all hose connections and power steering pump.

FLUID

STANDARD PROCEDURE - POWER STEERING FLUID LEVEL CHECKING

WARNING: FLUID LEVEL SHOULD BE CHECKED WITH THE ENGINE OFF TO PREVENT INJURY FROM MOVING PARTS.

The fluid level can be read through the exterior of the power steering fluid reservoir. The reservoir exterior is marked “FILL RANGE” and “ADD.” The fluid shows through the reservoir indicating its level. The fluid level should be within the “FILL RANGE” when the fluid is at normal ambient temperature, approximately 21°C to 27°C (70°F to 80°F).

Before removing the power steering filler cap, wipe the reservoir filler cap free of dirt and debris. Remove the cap and fill as necessary. Do not overfill the power steering system. **Use only Mopar® ATF+4 Automatic Transmission Fluid (MS-9602).**

HOSE - PRESSURE

REMOVAL

WARNING: POWER STEERING FLUID, ENGINE COMPONENTS AND EXHAUST SYSTEM MAY BE EXTREMELY HOT IF ENGINE HAS BEEN RUNNING. DO NOT START ENGINE WITH ANY LOOSE OR DISCONNECTED HOSES, OR ALLOW HOSES TO TOUCH HOT EXHAUST MANIFOLD OR CATALYST.

NOTE: Cap all open ends of hoses, power steering pump fittings and steering gear ports to prevent the entry of foreign material into the components.

(1) Remove remote ground cable from ground stud on left shock tower. Isolate ground cable from vehicle by placing isolator on stud as shown (Fig. 10).

(2) Siphon as much power steering fluid as possible out of power steering fluid reservoir.

(3) Raise vehicle. (Refer to LUBRICATION & MAINTENANCE/HOISTING - STANDARD PROCEDURE)

(4) Remove accessory drive splash shield.

(5) Remove pressure hose from pressure fitting on power steering pump (Fig. 3) (Fig. 4).

(6) Remove left front wheel and tire assembly.

(7) Remove power steering fluid pressure hose from power steering gear (Fig. 12).

(8) Remove screws fastening pressure hose to crossmember (Fig. 11).

(9) Remove power steering pressure hose.

HOSE - PRESSURE (Continued)

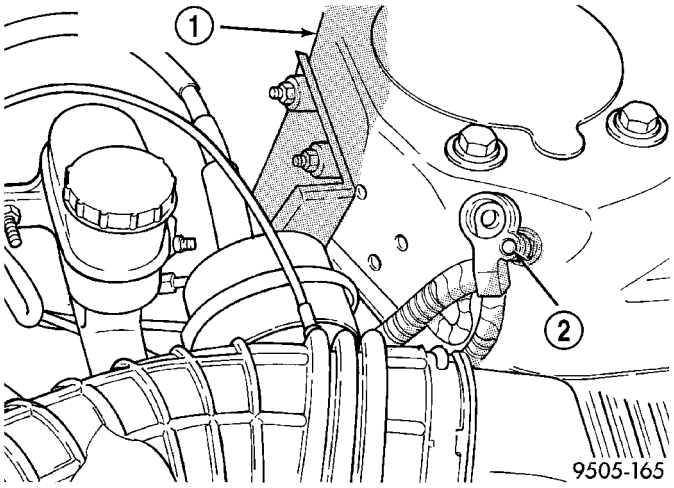

Fig. 10 Correctly Isolated Remote Ground Cable

1 - LEFT STRUT TOWER
2 - GROUND STUD

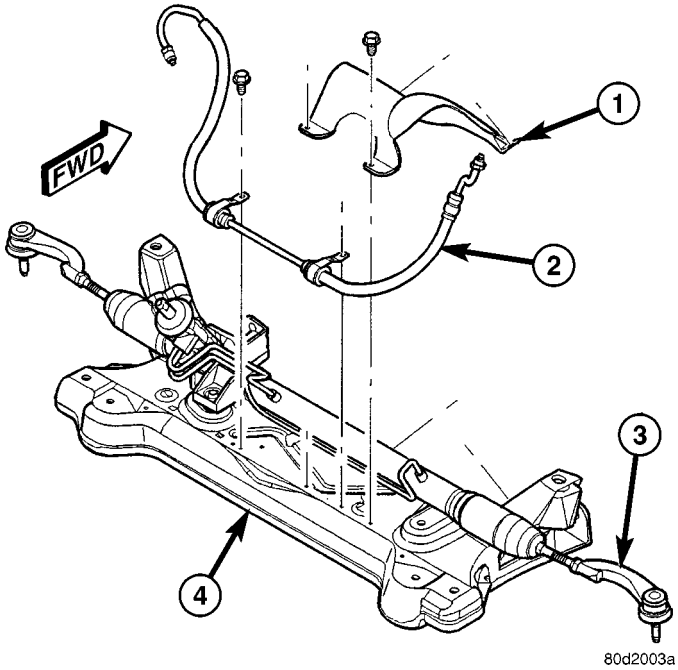

Fig. 11 Pressure Hose Mounting To Crossmember

1 - HEAT SHIELD (TYPICAL)
2 - PRESSURE HOSE
3 - POWER STEERING GEAR
4 - FRONT SUSPENSION CROSSMEMBER

INSTALLATION

(1) Place power steering pressure hose on top of front suspension crossmember in reverse order of removal.

(2) Install screws fastening pressure hose routing clamps to crossmember (Fig. 11). Tighten screws to 45 N·m (33 ft. lbs.) torque.

(3) Using a lint free towel, wipe clean all open power steering hose ends, and power steering pump fittings.

(4) Install a NEW O-ring on each end fitting of steering pressure hose. Lubricate all O-rings using fresh clean power steering fluid.

(5) Install pressure hose into power steering gear port (Fig. 12). Thread tube nut into port and tighten to 31 N·m (275 In. lbs.) torque.

(6) Install pressure hose into pump pressure fitting (Fig. 3) (Fig. 4). Thread tube nut into port and tighten to 31 N·m (275 in. lbs.) torque.

(7) Install accessory drive splash shield.

(8) Install left front wheel and tire assembly. Progressively tighten all wheel lug nuts using a criss-cross pattern to 135 N·m (100 ft. lbs.) torque.

(9) Lower vehicle.

(10) Install remote battery ground cable on ground stud located on left shock tower.

(11) Fill reservoir with fluid and bleed system using Power Steering Pump Initial Operation standard procedure. (Refer to 19 - STEERING/PUMP - STANDARD PROCEDURE)

(12) Check for leaks.

HOSE - RETURN

REMOVAL

WARNING: POWER STEERING FLUID, ENGINE PARTS AND EXHAUST SYSTEM MAY BE EXTREMELY HOT IF ENGINE HAS BEEN RUNNING. DO NOT START ENGINE WITH ANY LOOSE OR DISCONNECTED HOSES. DO NOT ALLOW HOSES TO TOUCH HOT EXHAUST MANIFOLD OR CATALYST.

NOTE: Cap all open ends of hoses, power steering pump fittings and steering gear ports to prevent the entry of foreign material into the components.

The return hose can be serviced as two separate pieces. They are the Return Hose With Tube and the Return Hose To Reservoir.

RETURN HOSE WITH TUBE

(1) Remove remote ground cable from ground stud on left shock tower. Isolate ground cable from vehicle by placing isolator on stud as shown (Fig. 10).

(2) Siphon power steering fluid from power steering fluid reservoir.

(3) Remove vehicle's front fascia. (Refer to 13 - FRAMES & BUMPERS/BUMPERS/FRONT FASCIA - REMOVAL)

HOSE - RETURN (Continued)

(4) If not previously lifted, raise vehicle. (Refer to LUBRICATION & MAINTENANCE/HOISTING - STANDARD PROCEDURE)

(5) Remove left front wheel and tire assembly.

(6) Remove wheel opening forward splash shield.

(7) Remove power steering fluid pressure hose, then return hose from power steering gear (Fig. 12).

(8) Remove air shield below left end of bumper reinforcement.

(9) Remove clamp and return hose (to reservoir) from right end of return hose tube below the bumper reinforcement (Fig. 12).

(10) Remove tube mounting clips from bumper reinforcement (Fig. 12).

(11) Remove return hose tube from routing clips along left frame rail.

(12) Move steering gear end of return hose tube to outside of frame rail.

(13) Pull return hose with tube forward, snaking it between ABS ICU and frame rail. Remove return hose from vehicle.

RETURN HOSE TO RESERVOIR

(1) Remove remote ground cable from ground stud on left shock tower. Isolate ground cable from vehicle by placing isolator on stud as shown (Fig. 10).

(2) Siphon power steering fluid from power steering fluid reservoir.

(3) Remove screw fastening power steering fluid reservoir to engine coolant recovery bottle (Fig. 12).

(4) Lift reservoir off guide on engine coolant recovery bottle.

(5) Remove hose clamp attaching power steering fluid return hose to reservoir (Fig. 12).

(6) Remove power steering fluid return hose from reservoir.

(7) Remove vehicle's front fascia. (Refer to 13 - FRAMES & BUMPERS/BUMPERS/FRONT FASCIA - REMOVAL)

(8) If not previously lifted, raise vehicle. (Refer to LUBRICATION & MAINTENANCE/HOISTING - STANDARD PROCEDURE)

(9) Remove clamp and return hose (to reservoir) from right end of return hose tube below the bumper reinforcement (Fig. 12).

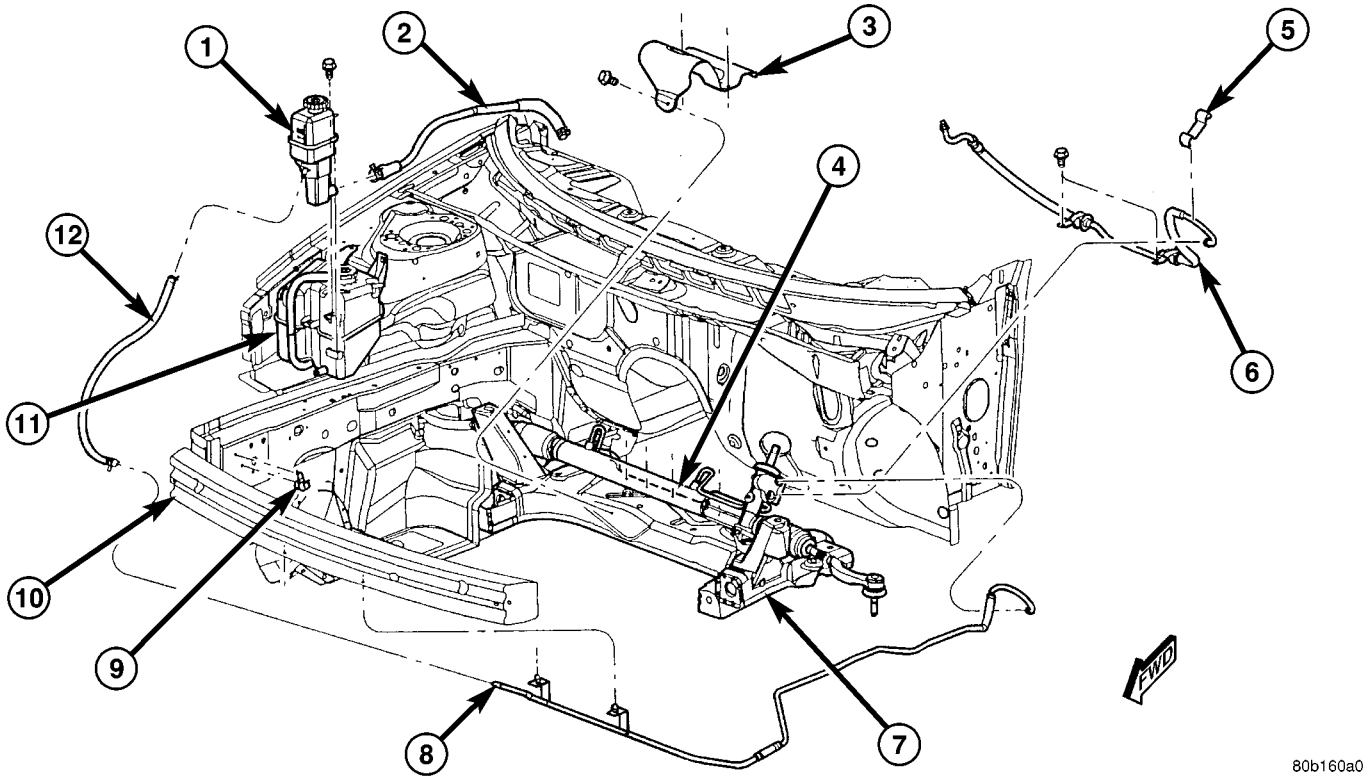

Fig. 12 Power Steering Hoses & Reservoir

1 - FLUID RESERVOIR
2 - SUPPLY HOSE
3 - STEERING GEAR HEAT SHIELD
4 - POWER STEERING GEAR
5 - CLIP
6 - PRESSURE HOSE
7 - FRONT SUSPENSION CROSSMEMBER
8 - RETURN HOSE WITH TUBE
9 - CLIP
10 - FRONT BUMPER REINFORCEMENT
11- COOLANT RECOVERY BOTTLE
12 - RETURN HOSE

HOSE - RETURN (Continued)

(10) Remove the return hose from routing clip on inside of right frame rail (Fig. 12).

(11) Remove power steering fluid return hose.

INSTALLATION

WARNING: POWER STEERING FLUID, ENGINE PARTS AND EXHAUST SYSTEM MAY BE EXTREMELY HOT IF ENGINE HAS BEEN RUNNING. DO NOT START ENGINE WITH ANY LOOSE OR DISCONNECTED HOSES. DO NOT ALLOW HOSES TO TOUCH HOT EXHAUST MANIFOLD OR CATALYST.

NOTE: Cap all open ends of hoses, power steering pump fittings and steering gear ports to prevent the entry of foreign material into the components.

The return hose can be serviced as two separate pieces. They are the Return Hose With Tube and the Return Hose To Reservoir.

RETURN HOSE WITH TUBE

(1) Install hose with tube in vehicle using the reverse of removal. Guide return hose with tube rearward, snaking it between ABS ICU and frame rail.

(2) Install return hose tube into routing clips along left frame rail.

(3) Install tube along bottom of bumper reinforcement using routing clips (Fig. 12).

(4) Install return hose (to reservoir) on right end of return hose tube below the bumper reinforcement (Fig. 12). Install clamp securing hose in place.

(5) Install air shield below left end of bumper reinforcement.

(6) Using a lint free towel, wipe clean open power steering hose ends and power steering gear port.

(7) Install NEW O-rings on power steering hose ends to steering gear.

(8) Lubricate O-rings using fresh clean power steering fluid.

(9) Install power steering fluid return hose to power steering gear. Tighten tube nut to 31 N·m (275 In. lbs.).

(10) Install power steering fluid pressure hose to power steering gear. Tighten tube nut to 31 N·m (275 In. lbs.).

(11) Install wheel opening forward splash shield.

(12) Install front fascia. (Refer to 13 - FRAMES & BUMPERS/BUMPERS/FRONT FASCIA - REMOVAL)

(13) Install left front wheel and tire assembly. Progressively tighten all wheel lug nuts using a criss-cross pattern to 135 N·m (100 ft. lbs.) torque.

(14) Lower vehicle.

(15) Install remote battery ground cable on ground stud located on left shock tower.

(16) Fill reservoir with fluid and bleed system using Power Steering Pump Initial Operation standard procedure. (Refer to 19 - STEERING/PUMP - STANDARD PROCEDURE)

(17) Check for leaks.

RETURN HOSE TO RESERVOIR

(1) Install return hose into routing clip on inside of right frame rail (Fig. 12).

(2) Install return hose (to reservoir) on right end of return hose tube below the bumper reinforcement (Fig. 12). Install clamp securing hose in place.

(3) Install front fascia. (Refer to 13 - FRAMES & BUMPERS/BUMPERS/FRONT FASCIA - REMOVAL)

(4) Lower vehicle.

(5) Install power steering fluid return hose on power steering fluid reservoir fitting. **Be sure hose clamp is installed on hose past upset bead on power steering reservoir fitting.**

(6) Slide reservoir down over guide on engine coolant recovery bottle.

(7) Install power steering fluid reservoir mounting screw (Fig. 12).

(8) Fill reservoir with fluid and bleed system using Power Steering Pump Initial Operation standard procedure. (Refer to 19 - STEERING/PUMP - STANDARD PROCEDURE)

(9) Check for leaks.

HOSE - SUPPLY

REMOVAL

WARNING: POWER STEERING FLUID, ENGINE PARTS AND EXHAUST SYSTEM MAY BE EXTREMELY HOT IF ENGINE HAS BEEN RUNNING. DO NOT START ENGINE WITH ANY LOOSE OR DISCONNECTED HOSES. DO NOT ALLOW HOSES TO TOUCH HOT EXHAUST MANIFOLD OR CATALYST.

NOTE: Cap all open ends of hoses, fittings and ports to prevent the entry of foreign material into the components.

(1) Remove remote ground cable from ground stud on left shock tower. Isolate ground cable from vehicle by placing isolator on stud as shown (Fig. 10).

(2) Siphon as much power steering fluid as possible out of power steering fluid reservoir.

(3) Remove screw fastening reservoir to engine coolant recovery bottle (Fig. 12).

(4) Lift reservoir off guide on engine coolant recovery bottle.

HOSE - SUPPLY (Continued)

(5) Remove hose clamp attaching supply hose to reservoir, then remove supply hose from reservoir (Fig. 12).

(6) Remove hose clamp attaching supply hose to power steering pump supply fitting, then remove supply hose from supply fitting (Fig. 13) (Fig. 14).

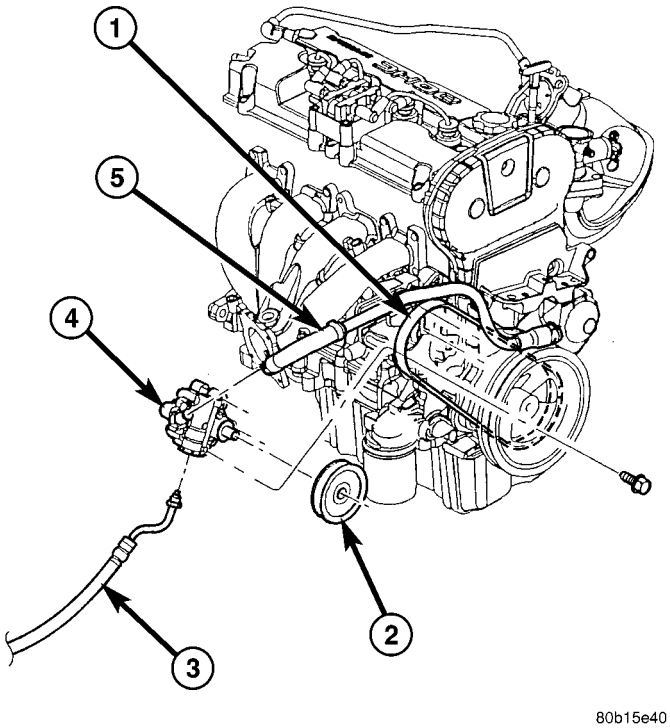

Fig. 13 Pump Mounting To Engine (2.0L/2.4L)

1 - DRIVE BELT
2 - PULLEY
3 - PRESSURE HOSE
4 - POWER STEERING PUMP
5 - SUPPLY HOSE

(7) Remove supply hose from vehicle.

INSTALLATION

(1) Install supply hose down past engine and onto power steering pump supply fitting (Fig. 13) (Fig. 14). Install clamp.**Be sure hose clamp is installed on hose past upset bead on fitting.**

(2) Install power steering fluid supply hose onto power steering fluid reservoir fitting (Fig. 12). Install clamp. **Be sure hose clamp is installed on hose past upset bead on power steering reservoir fitting.**

(3) Slide reservoir down over guide on engine coolant recovery bottle.

(4) Install power steering fluid reservoir mounting screw and tighten to 6 N·m (53 in. lbs.).

(5) Install remote battery ground cable on ground stud located on left shock tower.

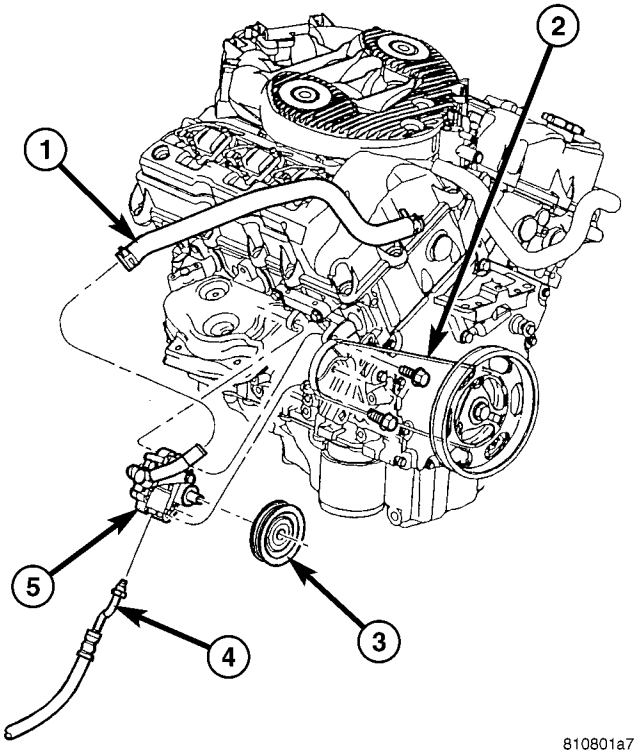

Fig. 14 Pump Mounting To Engine (2.7L)

1 - SUPPLY HOSE
2 - DRIVE BELT
3 - PULLEY
4 - PRESSURE HOSE
5 - POWER STEERING PUMP

(6) Fill power steering pump fluid reservoir to the proper level.

(7) Start the engine and let run for a few seconds, then turn the engine off.

(8) Fill power steering pump fluid reservoir to the proper level and perform Power Steering Pump Initial Operation standard procedure. (Refer to 19 - STEERING/PUMP - STANDARD PROCEDURE)

(9) Check for leaks.

RESERVOIR

DESCRIPTION

All vehicles use a remote mounted power steering fluid reservoir. The reservoir is mounted to the engine coolant recovery bottle on the right side of the engine compartment (Fig. 12). Coolant level is read through the side of the bottle.

REMOVAL

(1) Remove remote ground cable from ground stud on left shock tower. Isolate ground cable from vehicle by placing isolator on stud as shown (Fig. 10).

RESERVOIR (Continued)

(2) Using a siphon pump, remove as much power steering fluid as possible from the power steering fluid reservoir.

(3) Remove screw fastening reservoir to engine coolant recovery bottle (Fig. 12).

(4) Lift reservoir off guide on engine coolant recovery bottle.

(5) Remove hose clamps attaching power steering fluid supply hose and return hose to reservoir.

(6) Remove power steering fluid supply and return hoses from reservoir and remove reservoir from vehicle.

INSTALLATION

(1) Install power steering fluid return and supply hoses on power steering fluid reservoir fittings (Fig. 12). **Be sure both hose clamps are installed on hose past upset bead on power steering reservoir fittings.**

(2) Slide reservoir down over guide on engine coolant recovery bottle.

(3) Install power steering fluid reservoir mounting screw and tighten to 6 N·m (53 in. lbs.).

(4) Install remote battery ground cable on ground stud located on left shock tower.

(5) Fill power steering pump fluid reservoir to the proper level.

(6) Start the engine and let run for a few seconds, then turn the engine off.

(7) Adjust fluid level if necessary. Repeat steps (5) and (6) until the fluid level remains constant after running the engine. If necessary perform Power Steering Pump Initial Operation standard procedure. (Refer to 19 - STEERING/PUMP - STANDARD PROCEDURE)

(8) Check for leaks.

TRANSAXLE

TABLE OF CONTENTS

	page
T350 MANUAL TRANSAXLE	1
T850 MANUAL TRANSAXLE	42
41TE AUTOMATIC TRANSAXLE	109

T350 MANUAL TRANSAXLE

TABLE OF CONTENTS

	page
T350 MANUAL TRANSAXLE	
DESCRIPTION	2
DIAGNOSIS AND TESTING - COMMON PROBLEM CAUSES	3
REMOVAL	4
DISASSEMBLY	4
CLEANING	10
INSPECTION	10
ASSEMBLY	11
INSTALLATION	16
SPECIFICATIONS	16
SPECIAL TOOLS	18
BACK-UP LAMP SWITCH	
REMOVAL	20
INSTALLATION	20
DIFFERENTIAL	
DISASSEMBLY	20
ASSEMBLY	22
ADJUSTMENTS	
DIFFERENTIAL BEARING PRELOAD ADJUSTMENT / SHIM SELECTION	25
DIFFERENTIAL BEARING CUPS	
REMOVAL	26
INSTALLATION	27
FLUID	
STANDARD PROCEDURE - FLUID DRAIN AND FILL	27
GEAR SHIFT CABLE	
REMOVAL	27
INSTALLATION	28
GEAR SHIFT MECHANISM	
REMOVAL	29
INSTALLATION	29
INPUT BEARING AND SLEEVE	
REMOVAL	30
INSTALLATION	30
INPUT SHAFT	
DISASSEMBLY	31
ASSEMBLY	34
OUTPUT BEARING AND RACE	
REMOVAL	36
INSTALLATION	37
OUTPUT SHAFT	
DISASSEMBLY	38
REAR BEARING OIL FEED TROUGH	
REMOVAL	38
INSTALLATION	38
SHIFT CROSSOVER SHAFT	
REMOVAL	38
INSTALLATION	39
SHIFT RAIL BUSHINGS	
REMOVAL	39
INSTALLATION	39
SHIFT SELECTOR SHAFT	
REMOVAL	39
INSTALLATION	39
SHIFT SELECTOR SHAFT BUSHING	
REMOVAL	39
INSTALLATION	39
SHIFT SHAFT SEALS	
REMOVAL	40
INSTALLATION	40
SYNCHRONIZER	
DISASSEMBLY	40
CLEANING	
CLEAN	40
INSPECTION	
INSPECT	40
ASSEMBLY	40
VEHICLE SPEED SENSOR	
DESCRIPTION	
VEHICLE SPEED SENSOR	41
REMOVAL	41
INSTALLATION	41

T350 MANUAL TRANSAXLE

DESCRIPTION

This five speed is a constant-mesh manual transaxle. All gear ranges, except reverse, are synchronized. The reverse gear utilizes a brake and blocking ring for shifting ease. The reverse idler gear is supported on a sliding spindle idler shaft. The transaxle case is aluminum with a steel end–plate bearing cover. It is housed in a die-cast aluminum case featuring a two–piece, middle split design (Fig. 1).

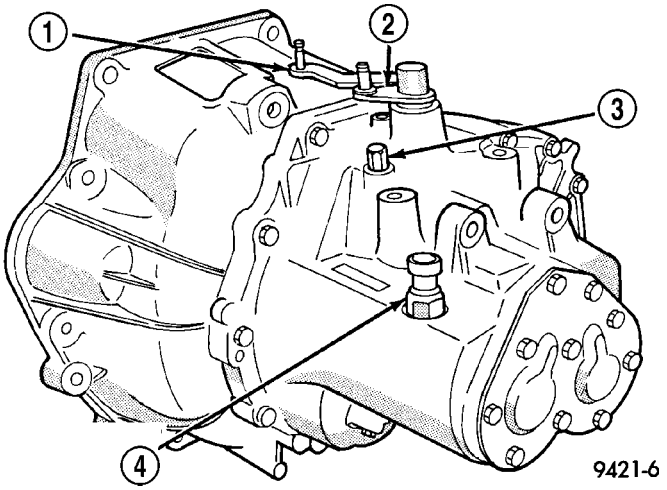

Fig. 1 T350 Manual Transaxle

1 - SHIFT LEVER
2 - CROSSOVER LEVER
3 - VENT
4 - REVERSE LAMP SWITCH

The T350 transaxle internal components can be serviced only by separating the gear case from the bellhousing case.

CAUTION: The transaxle output shaft is serviced as a unit. No disassembly and reassembly is possible. Damage to the transaxle may result.

TRANSAXLE IDENTIFICATION

The transaxle model, assembly number, and build date are on a metal I.D. tag that is attached to the end cover of the transaxle (Fig. 2). This information is also shown on a bar code label that is attached to the front of the transaxle (Fig. 3).

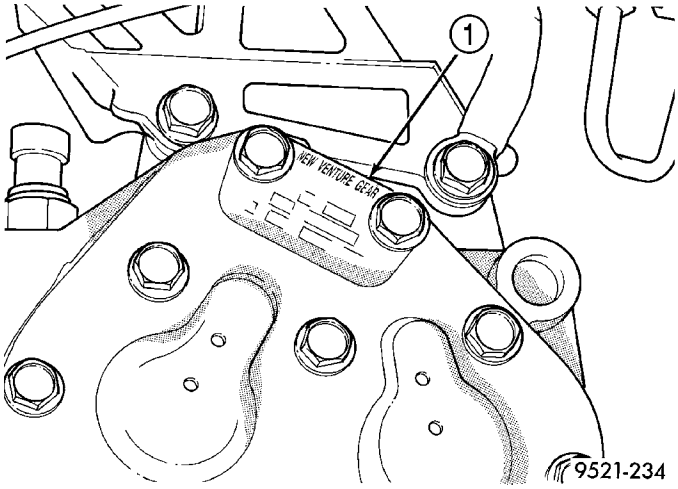

Fig. 2 Metal I.D. Tag

1 - METAL I.D. TAG

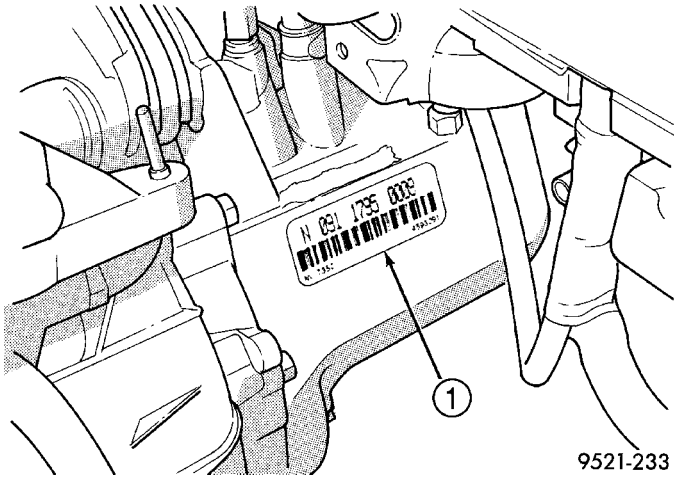

Fig. 3 Bar Code Label

1 - BAR CODE LABEL

NOTE: Transaxles use various final drive gear ratios in different vehicle applications. Therefore, it is necessary that the correct transaxle assembly number is used when ordering service parts.

T350 MANUAL TRANSAXLE (Continued)

GEAR RATIOS

CAUTION: All gears and shafts must not be interchanged with other transaxles; they will not function correctly.

The differential is a conventional arrangement of gears that is supported by tapered roller bearings. The final output gear turns the ring gear and differential assembly, thereby turning the drive axle shafts.

The gear ratios of each transaxle are shown in the following chart. The chart also shows which transaxles are available with the reverse–input shaft brake. This brake allows easier shifting into reverse and helps eliminate reverse gear clash.

GEAR	RATIO
1st	3.50
2nd	1.95
3rd	1.36
4th	0.97
5th	0.81
FINAL DRIVE RATIO	3.94
REVERSE BRAKE	YES

GEARSHIFT PATTERN

The T350 transaxle shift pattern is a modified H–pattern (Fig. 4). Overdrive fifth and reverse gears are in–line and outboard of the first through fourth gear positions.

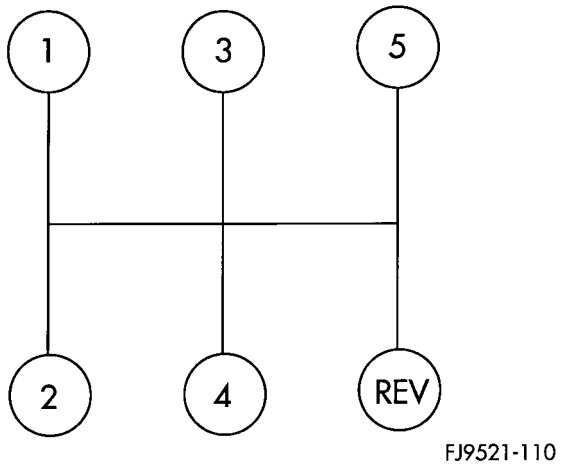

Fig. 4 T350 Transaxle Shift Pattern

LUBRICANT/ADDITIVES

T350 transaxles use Mopar® ATF+4. **Hypoid gear lube or engine oil should not be used in this transaxle.** Hard shifting effort, bearing, gear, and/or synchronizer failure may occur if incorrect fluid is used.

The addition of any fluids to the transaxle, other than the fluid listed above, is not recommended. An exception to this policy is the use of special dyes to aid in detecting fluid leaks. The use of transmission sealers should be avoided, since they may adversely affect synchronizers and seals.

SEALANTS

The sealant used to seal the transaxle case halves and input bearing is Mopar® Gasket Maker, Loctite® 518, or equivalent. The sealant used for the bearing end plate cover is Mopar® RTV.

DIAGNOSIS AND TESTING - COMMON PROBLEM CAUSES

The majority of transaxle malfunctions are a result of:

- Insufficient lubrication
- Incorrect lubricant
- Misassembled or damaged internal components
- Improper operation

HARD SHIFTING

Hard shifting may be caused by a misadjusted crossover cable. If hard shifting is accompanied by gear clash, synchronizer clutch and stop rings or gear teeth may be worn or damaged.

Misassembled synchronizer components also cause shifting problems. Incorrectly installed synchronizer sleeves, struts, or springs can cause shift problems.

Worn, damaged, missassembled or leaking hydraulic system/components can also cause difficult shifting or gear clash.

NOISY OPERATION

Transaxle noise is most often a result of worn or damaged components. Chipped, broken gear or synchronizer teeth, and brinnelled, spalled bearings all cause noise.

Abnormal wear and damage to the internal components is frequently the end result of insufficient lubricant.

SLIPS OUT OF GEAR

Transaxle disengagement may be caused by misaligned or damaged shift components, or worn teeth on the drive gears or synchronizer components. Incorrect assembly also causes gear disengagement.

T350 MANUAL TRANSAXLE (Continued)

LOW LUBRICANT LEVEL

Insufficient transaxle lubricant is usually the result of leaks, or inaccurate fluid level check or refill method. Leakage is evident by the presence of oil around the leak point. If leakage is not evident, the condition is probably the result of an underfill.

If air–powered lubrication equipment is used to fill a transaxle, be sure the equipment is properly calibrated. Equipment out of calibration can lead to an underfill condition.

CLUTCH PROBLEMS

Worn, damaged, or misaligned clutch components can cause difficult shifting, gear clash, and noise.

A worn or damaged clutch disc, pressure plate, or release bearing can cause hard shifting and gear clash.

REMOVAL

(1) Raise hood.
(2) Disconnect battery negative cable.
(3) Remove air cleaner assembly.
(4) Disconnect Vehicle Speed Sensor/Back-up Lamp Switch harness connector.
(5) Remove clutch release access cap.
(6) Disconnect clutch release cable.
(7) Disconnect crossover and selector cables from transaxle.
(8) Remove gearshift cable retainer clips from bracket and position gearshift cables out of way.
(9) Remove starter motor and secure out of way.
(10) Remove three (3) rear mount bracket-to-transaxle bolts.
(11) Raise vehicle on hoist.
(12) Remove halfshafts.
(13) Remove rear mount bracket-to-transaxle horizontal bolt.
(14) Remove rear mount through-bolt.
(15) Remove three (3) rear mount-to-crossmember bolts.
(16) Remove rear mount and bracket.
(17) Remove front mount through bolt.
(18) Remove engine front pencil strut brace.
(19) Remove front mount bracket from engine/transaxle.
(20) Remove structural collar.
(21) Remove bellhousing dust cover.
(22) Remove left wheel opening splash shield.
(23) Remove four (4) modular clutch-to-drive plate bolts. While removing bolts, one tight-tolerance (slotted) drive plate hole will be encountered. When this bolt is removed, mark driveplate and modular clutch assembly at this location, and be sure to align marks upon reassembly.
(24) Position screw jack and wood block to oil pan.
(25) Remove transaxle upper mount through bolt.
(26) Lower engine transaxle assembly.
(27) Remove transaxle upper mount.
(28) Obtain helper and transmission jack.
(29) Remove transaxle-to-engine block bolts.
(30) Remove transaxle from engine.

DISASSEMBLY

The T350 transaxle internal components can be serviced only by separating the gear case from the bellhousing case.

CAUTION: The transaxle output shaft is serviced as a unit. No disassembly and reassembly is possible. Damage to the transaxle may result.

(1) Place transaxle on bench.
(2) Remove the clutch release bearing and lever. Move the release fork and bearing to an in-line position. Grasp the release lever with two hands in the pivot stud socket area. Pull with even pressure to release the lever from the pivot stud.

CAUTION: Do not use a screwdriver or pry bar to release the lever as this may cause damage to the lever and/or clip.

(3) Remove shift levers by driving out the roll pins.
(4) Remove transaxle case half bolts (Fig. 5).

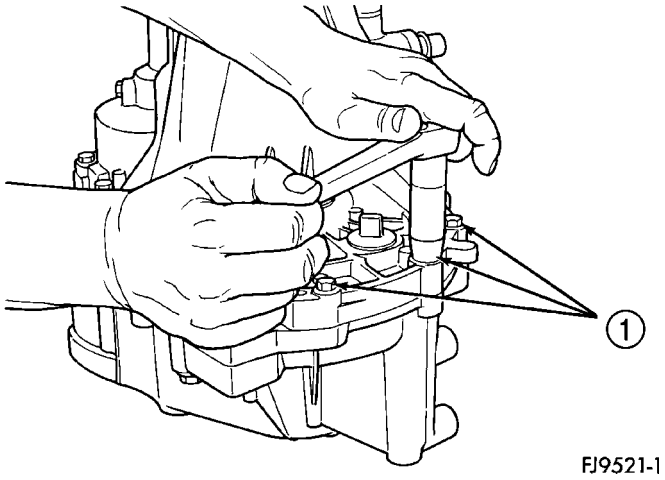

Fig. 5 Case Bolts

1 - CASE BOLTS

T350 MANUAL TRANSAXLE (Continued)

(5) Place two screwdrivers into the slots provided in the case halves near the dowels (Fig. 6). Separate the case halves (Fig. 7).

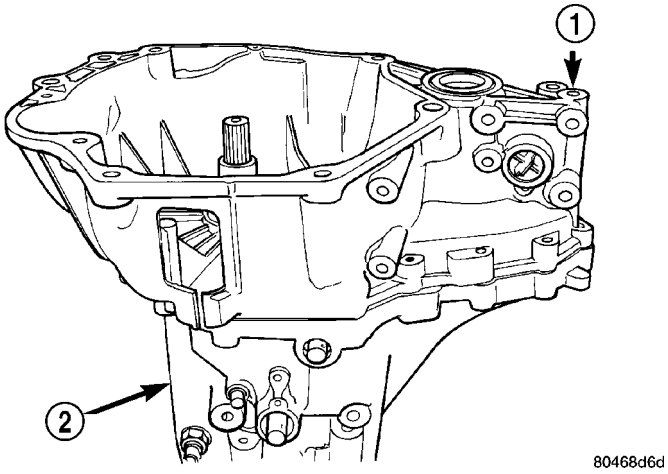

Fig. 6 Transaxle Case Halves

1 - BELLHOUSING HALF
2 - GEAR CASE HALF

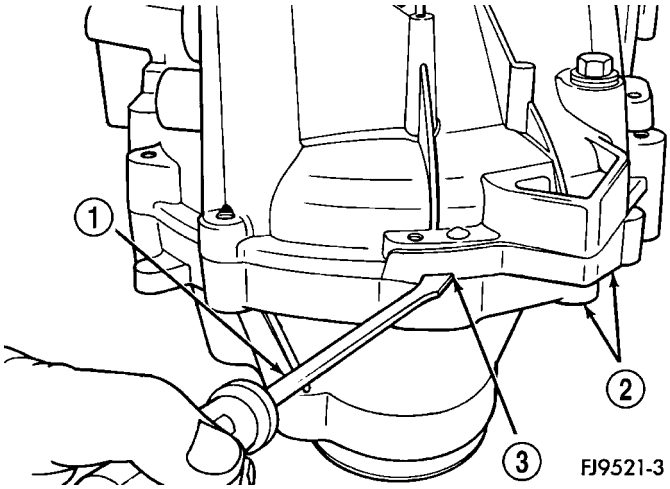

Fig. 7 Separate Case Halves

1 - PRY TOOL
2 - CASE HALVES
3 - PRY SLOT

(6) Remove bellhousing half from gear case half (Fig. 8).

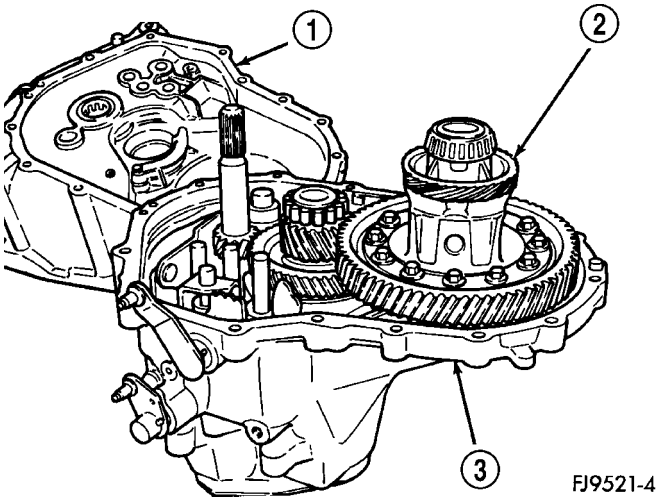

Fig. 8 Bellhousing Case Half Removal

1 - BELLHOUSING CASE HALF
2 - DIFFERENTIAL
3 - GEAR CASE HALF

(7) Remove output shaft roller bearing from output shaft.

(8) Remove differential assembly (Fig. 9).

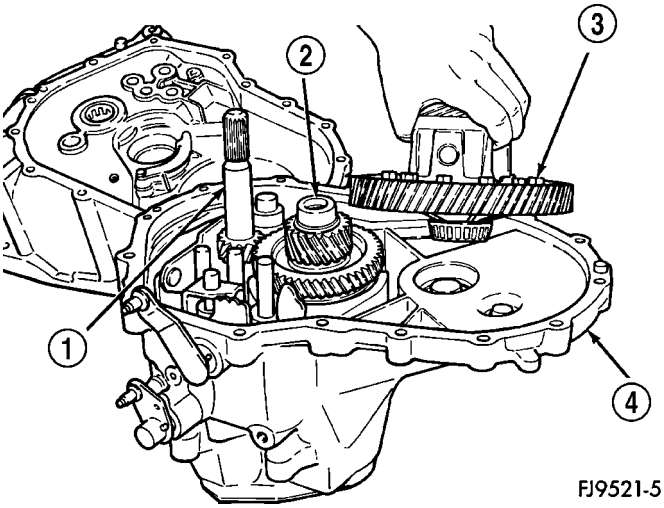

Fig. 9 Differential Assembly Removal

1 - INPUT SHAFT
2 - OUTPUT SHAFT
3 - DIFFERENTIAL
4 - CASE

T350 MANUAL TRANSAXLE (Continued)

(9) Remove reverse idler shaft bolt (Fig. 10).

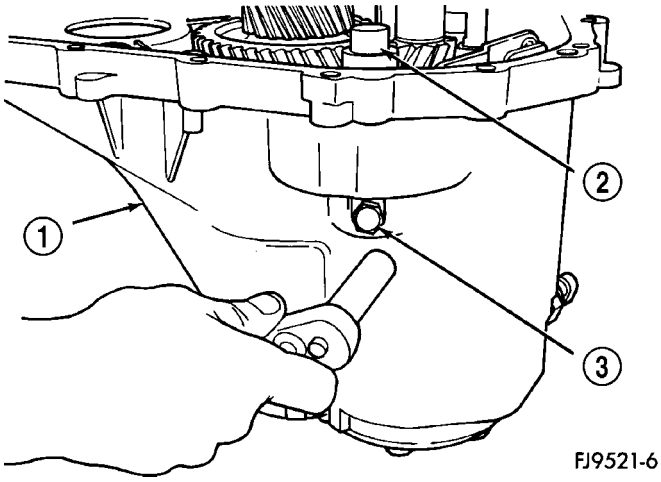

Fig. 10 Reverse Idler Shaft

1 - CASE
2 - REVERSE IDLER SHAFT
3 - REVERSE IDLER SHAFT BOLT

(10) Remove reverse idler shaft (Fig. 11).

(11) Remove reverse idler gear and spacer (Fig. 12).

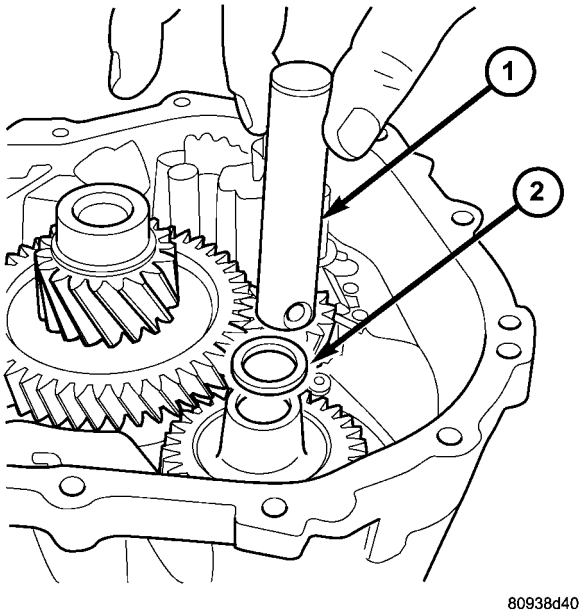

Fig. 11 Reverse Idler Shaft Removal

1 - REVERSE IDLER SHAFT
2 - SPACER

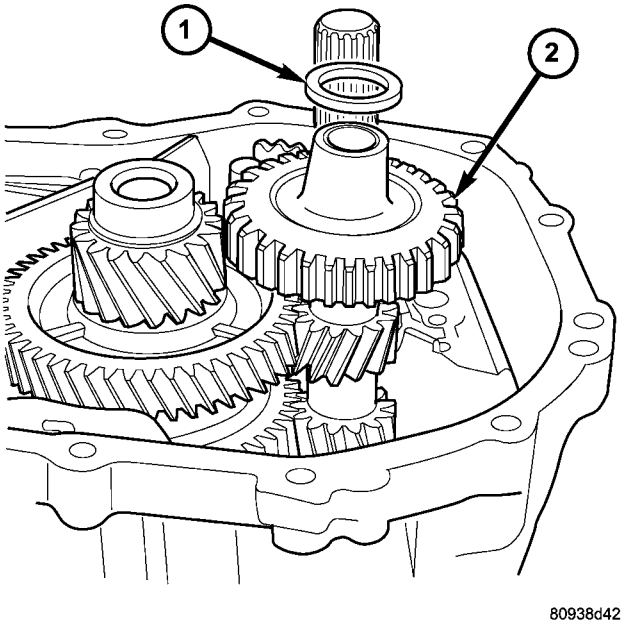

Fig. 12 Reverse Idler Gear and Spacer

1 - SPACER
2 - REVERSE IDLER GEAR

(12) Remove two screws retaining reverse fork bracket (Fig. 13). Remove reverse fork bracket and reverse cam blockout assembly (Fig. 14).

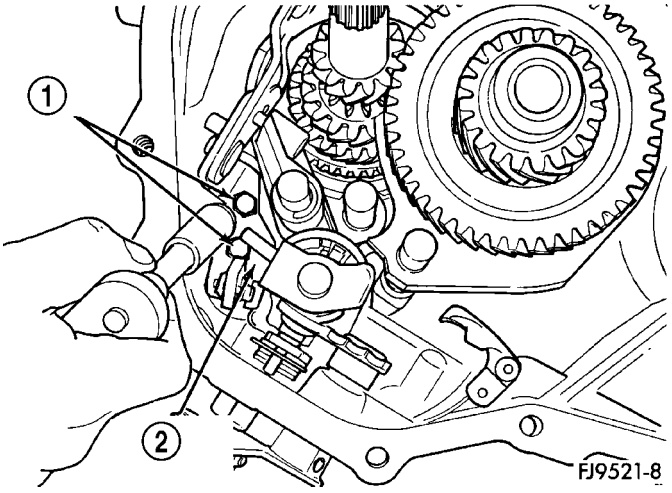

Fig. 13 Screws Retaining Reverse Fork Bracket

1 - SCREWS (2)
2 - REVERSE FORK BRACKET

T350 MANUAL TRANSAXLE (Continued)

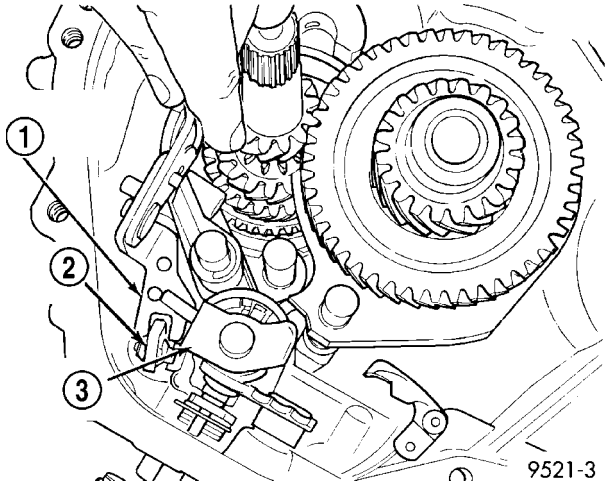

Fig. 14 Remove Reverse Fork Bracket

1 - REVERSE FORK BRACKET
2 - REVERSE CAM BLOCKOUT
3 - SHIFT BLOCKER ASSEMBLY

(13) Using snap–ring pliers, remove selector shaft spacer (Fig. 15).

(14) Pull the selector shaft shift pin out of the slot in the blocker assembly. Turn selector shaft up and out of the way (Fig. 16).

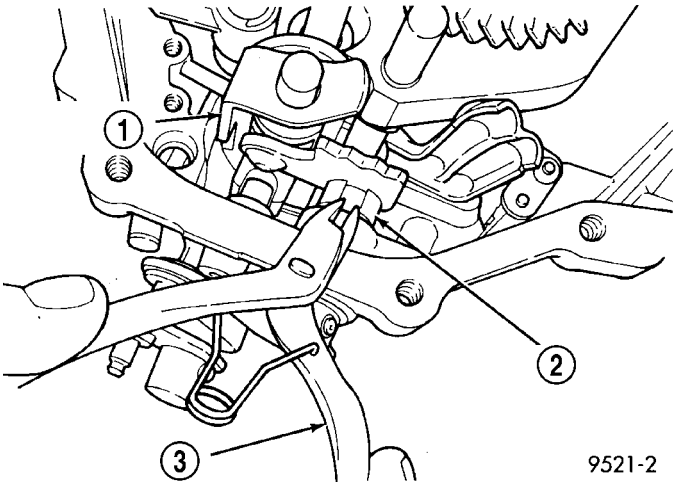

Fig. 15 Remove Selector Shaft Spacer

1 - SHIFT BLOCKER ASSEMBLY
2 - SELECTOR SHAFT SPACER (PLASTIC)
3 - SNAP RING PLIERS

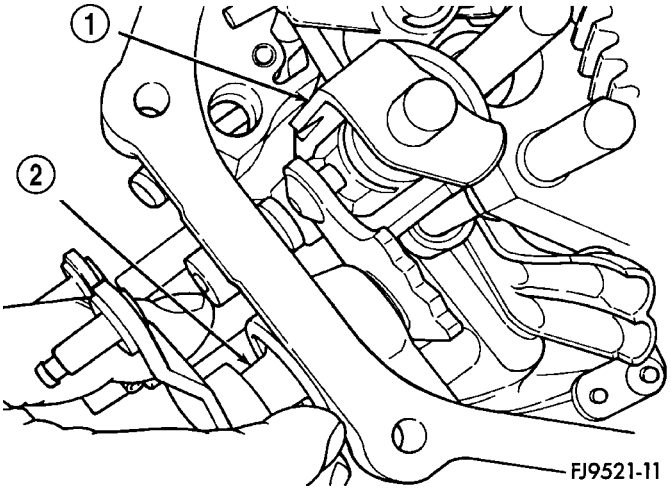

Fig. 16 Selector Shaft

1 - SHIFT ASSEMBLY
2 - SELECTOR SHAFT

(15) Remove transaxle end cover (Fig. 17) (Fig. 18).

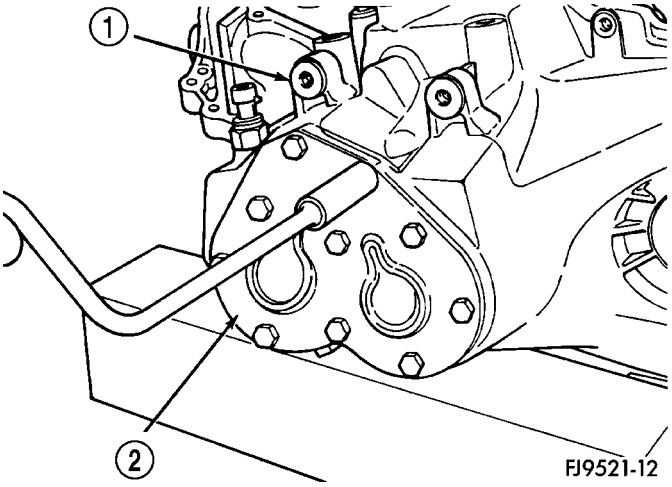

Fig. 17 Transaxle Cover Removal

1 - TRANSAXLE CASE
2 - END COVER

T350 MANUAL TRANSAXLE (Continued)

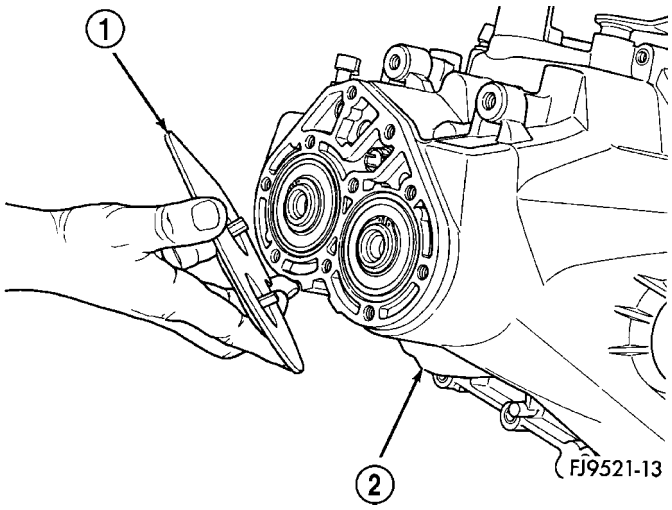

Fig. 18 End Cover

1 - END COVER
2 - CASE

(16) Remove two snap rings retaining the output shaft and the input shaft to the bearings (Fig. 19).

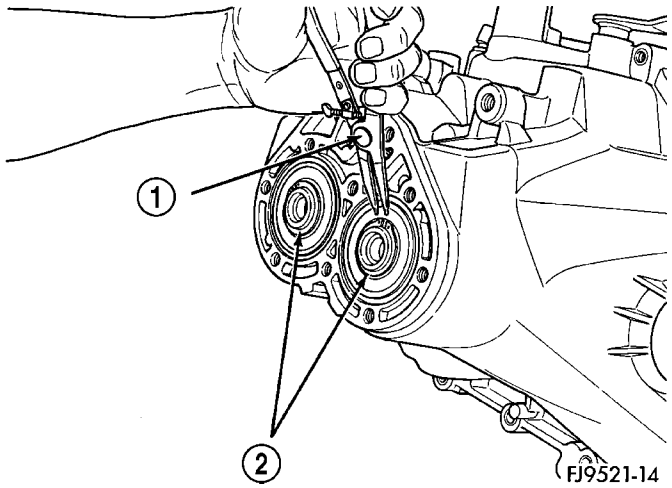

Fig. 19 Snap Rings Retaining Bearings

1 - SNAP RING PLIERS
2 - SNAP RINGS

(17) Using bench fixture and shims provided (Miller tools # 6785, 6785-1, and 6785-2), turn transaxle over. Install transaxle onto bench fixture (Fig. 20). Verify shim spacers are in position on bench fixture. Install transaxle into shop press.

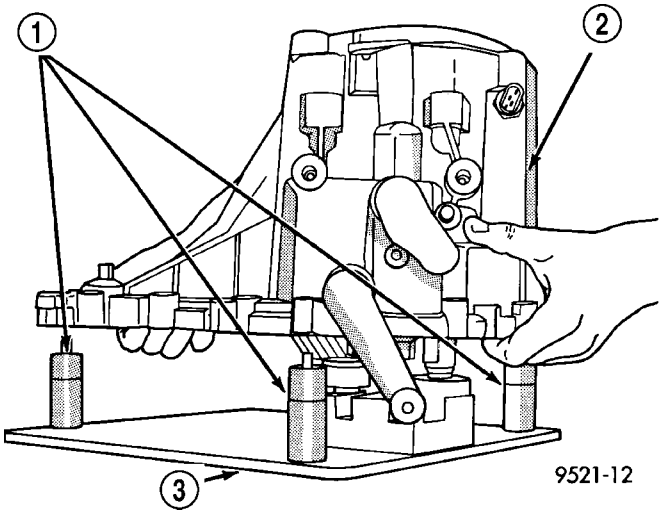

Fig. 20 Bench Fixture

1 - SHIMS
2 - TRANSAXLE
3 - 6785 BENCH FIXTURE

(18) Install bearing fixture Miller tool #6768 onto transaxle end bearings (Fig. 21). Verify tool is properly aligned to input and output shafts.

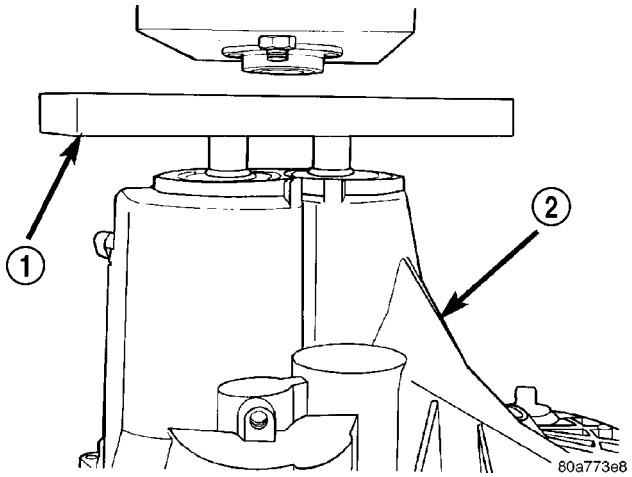

Fig. 21 Bearing Fixture

1 - BEARING FIXTURE
2 - TRANSAXLE CASE

T350 MANUAL TRANSAXLE (Continued)

CAUTION: The oil dams in the input and output shafts can be damaged while pressing on the shafts if the bearing fixture is not used properly.

(19) Install transaxle gear case into shop press. Press output and input shaft assemblies out of case (Fig. 22).

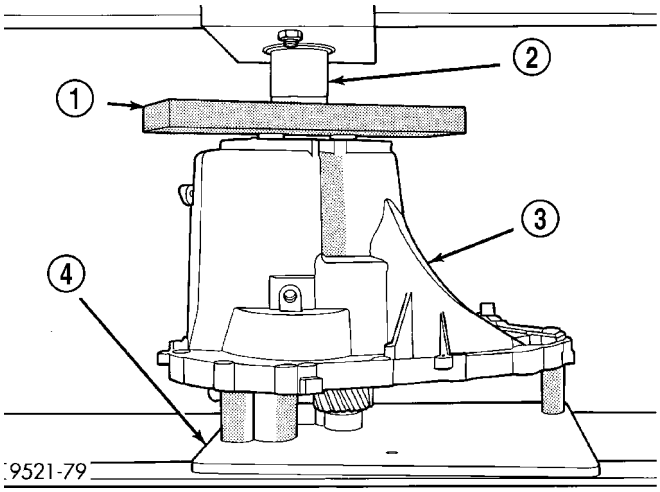

Fig. 22 Pressing Gears Out of Case

1 - BEARING FIXTURE
2 - PRESS RAM
3 - TRANSAXLE CASE
4 - BENCH FIXTURE

(20) Remove transaxle from press.

(21) Carefully remove transaxle case from the shaft assemblies and bench fixture (Fig. 23). Be sure the oil–feed trough to the end bearings is not damaged (Fig. 24).

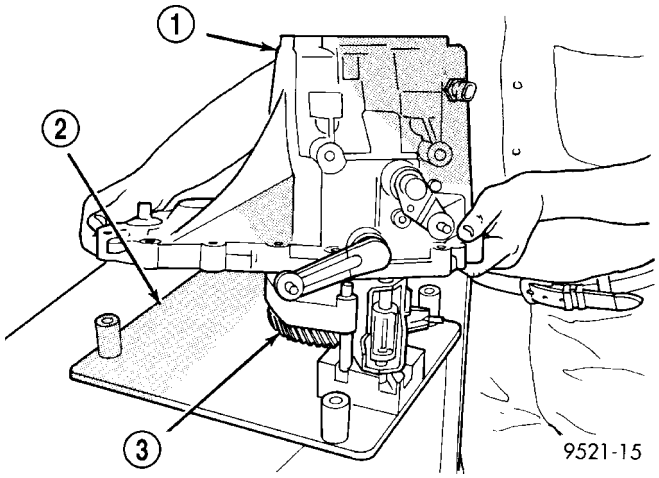

Fig. 23 Transaxle Case Removal

1 - TRANSAXLE CASE
2 - BENCH FIXTURE
3 - GEARTRAIN

(22) Remove the reverse brake friction cone and blocking ring from the input shaft assembly (Fig. 25) (Fig. 26).

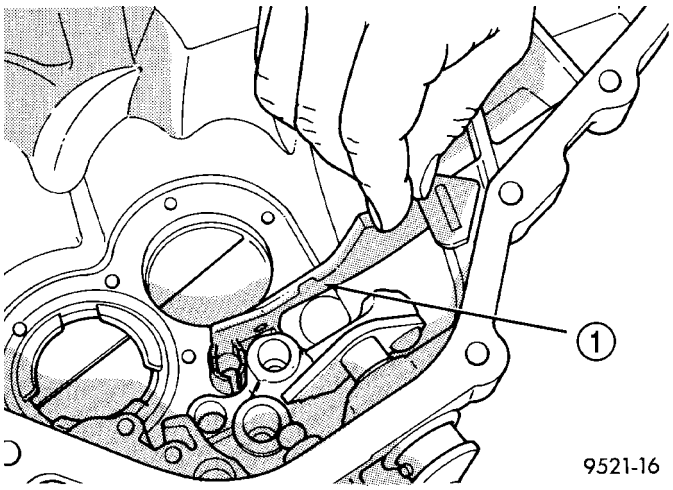

Fig. 24 Oil Feed Trough

1 - OIL FEED TROUGH

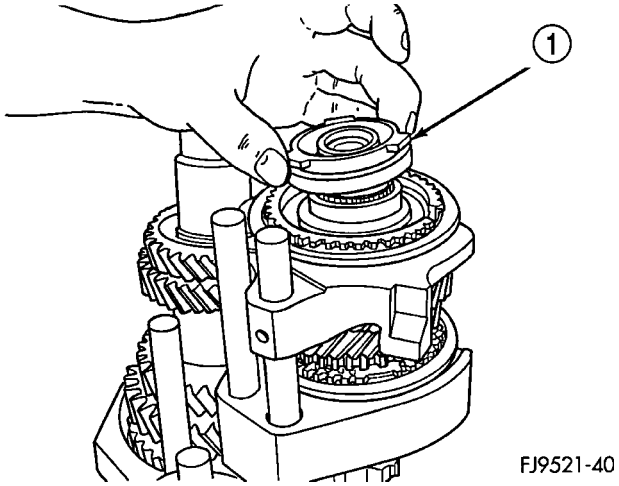

Fig. 25 Reverse Brake Friction Cone

1 - REVERSE BRAKE FRICTION CONE

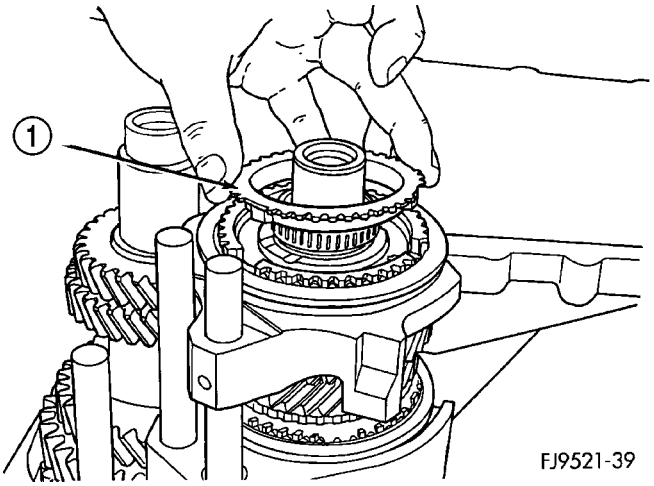

Fig. 26 Reverse Brake Blocking Ring

1 - REVERSE BRAKE BLOCKING RING

T350 MANUAL TRANSAXLE (Continued)

(23) Remove the shift blocker assembly from the bench fixture (Fig. 27).

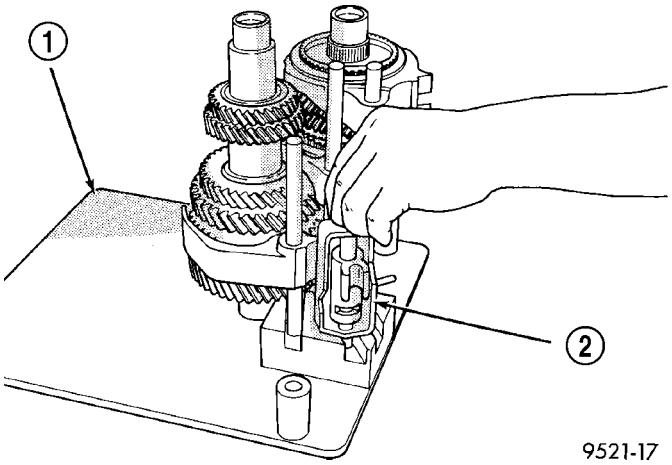

Fig. 27 Shift Blocker Removal

1 - 6785 BENCH FIXTURE
2 - SHIFT BLOCKER ASSEMBLY

(24) Remove the 1-2 shift fork from the output shaft (Fig. 28).

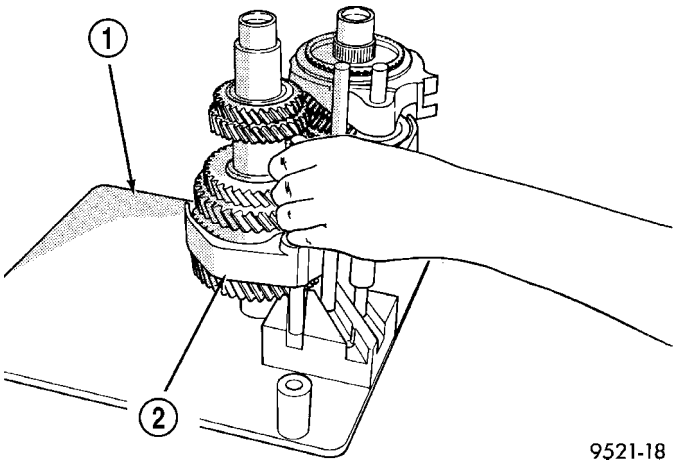

Fig. 28 1–2 Shift Fork Removal

1 - 6785 BENCH FIXTURE
2 - 1–2 SHIFT FORK

(25) Remove input and output shaft assemblies from bench fixture (Fig. 29).

CAUTION: The output shaft assembly is serviced as an assembly. Do not try to repair any component on the output shaft. If the 1-2 synchronizer or gear fails, it is necessary to replace the complete output shaft assembly.

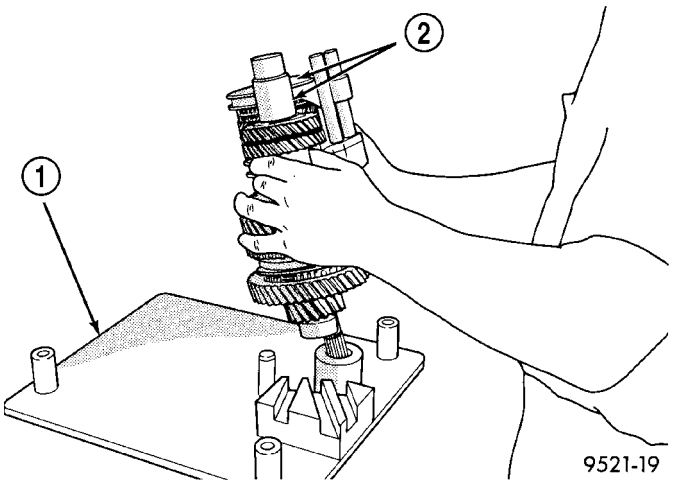

Fig. 29 Gear Train Removal

1 - 6785 BENCH FIXTURE
2 - INPUT AND OUTPUT SHAFTS

CLEANING

Clean the gears, bearings, shafts, synchronizers, thrust washers, oil feeder, shift mechanism, gear case, and bellhousing with solvent. Dry all parts except the bearings with compressed air. Allow the bearings to either air dry or wipe them dry with clean shop towels.

INSPECTION

Inspect the gears, bearings, shafts and thrust washers. Replace the bearings and cups if the rollers are worn, chipped, cracked, flat spotted, or brinnelled, or if the bearing cage is damaged or distorted. Replace the thrust washers if cracked, chipped, or worn. Replace the gears if the teeth are chipped, cracked, or worn thin. Inspect the synchronizers. Replace the sleeve if worn or damaged in any way. Replace the stop rings if the friction material is burned, flaking off, or worn. Check the condition of the synchro keys and springs. Replace these parts if worn, cracked, or distorted.

T350 MANUAL TRANSAXLE (Continued)

ASSEMBLY

The T350 transaxle internal components can be serviced only by separating the gear case from the bellhousing case.

CAUTION: The transaxle output shaft is serviced as a unit. No disassembly and reassembly is possible. Damage to the transaxle may result.

The sealant used to seal the transaxle case halves is Mopar® Gasket Maker, Loctite® 518, or equivalent. The sealant used for the bearing end plate cover is Mopar® RTV.

(1) Verify bench fixture shims are removed from bench fixture. Install output and input shafts into bench fixture (Miller tool #6785) (Fig. 30).

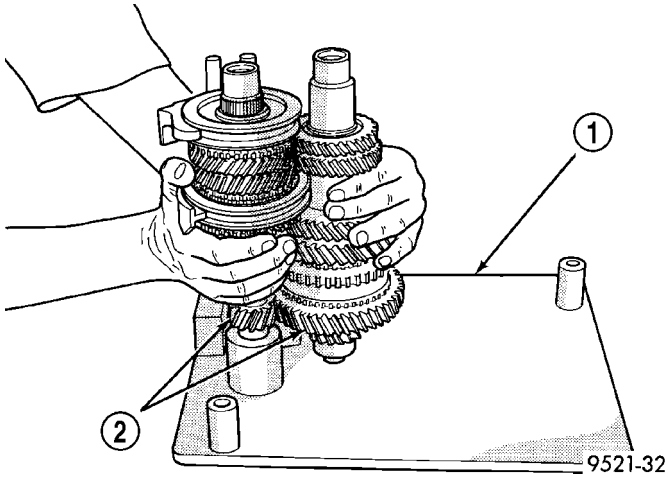

Fig. 30 Bench Fixture

1 - BENCH FIXTURE
2 - GEARTRAIN

(2) Install shift rails and forks into bench fixture (Fig. 31).

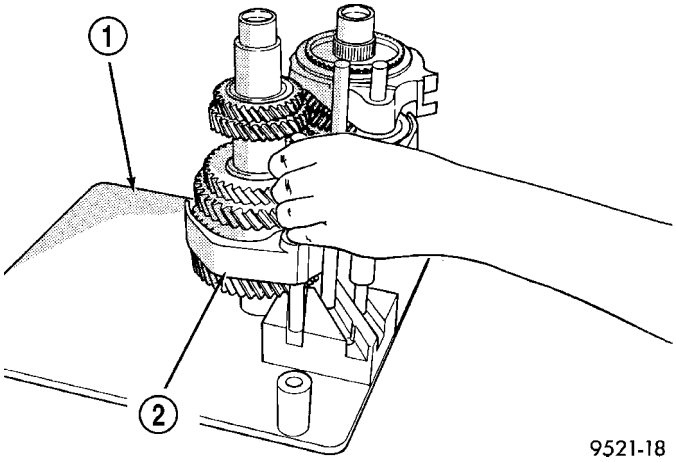

Fig. 31 Shift Rail Installation

1 - 6785 BENCH FIXTURE
2 - 1–2 SHIFT FORK

(3) Install shift blocker assembly into bench fixture (Fig. 32).

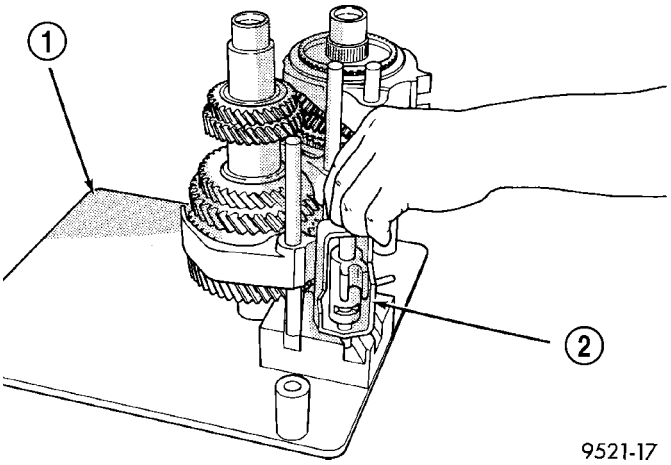

Fig. 32 Shift Blocker Installation

1 - 6785 BENCH FIXTURE
2 - SHIFT BLOCKER ASSEMBLY

(4) Install reverse brake blocking ring (Fig. 33).

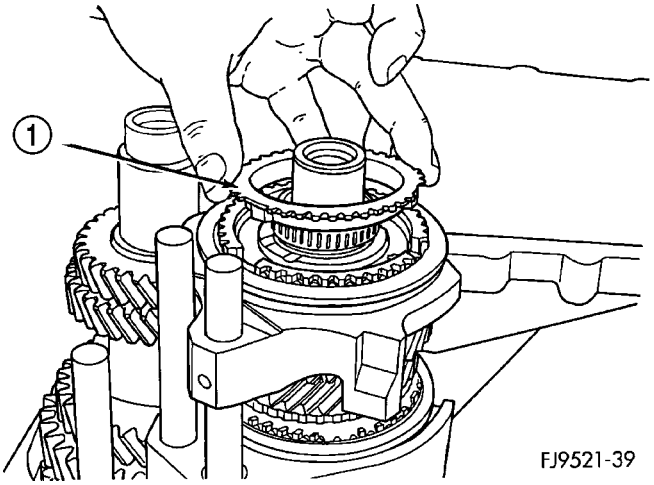

Fig. 33 Reverse Brake Blocking Ring Installation

1 - REVERSE BRAKE BLOCKING RING

T350 MANUAL TRANSAXLE (Continued)

(5) Install reverse brake friction cone (Fig. 34).

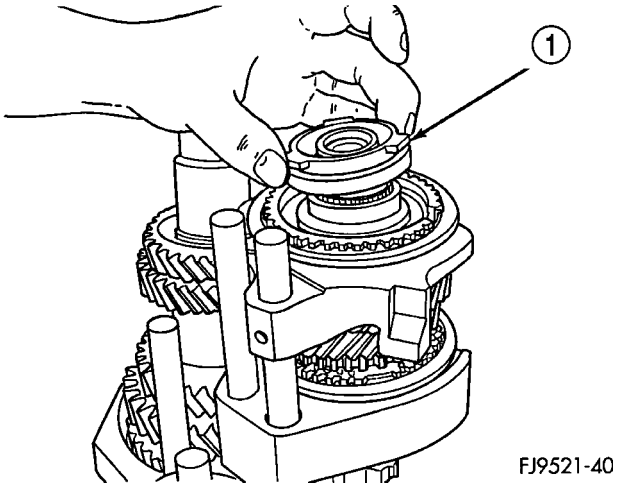

Fig. 34 Reverse Brake Friction Cone Installation

1 - REVERSE BRAKE FRICTION CONE

(6) Install gear–case half over bench fixture (Fig. 35). Line up shift finger over 3-4 lug.

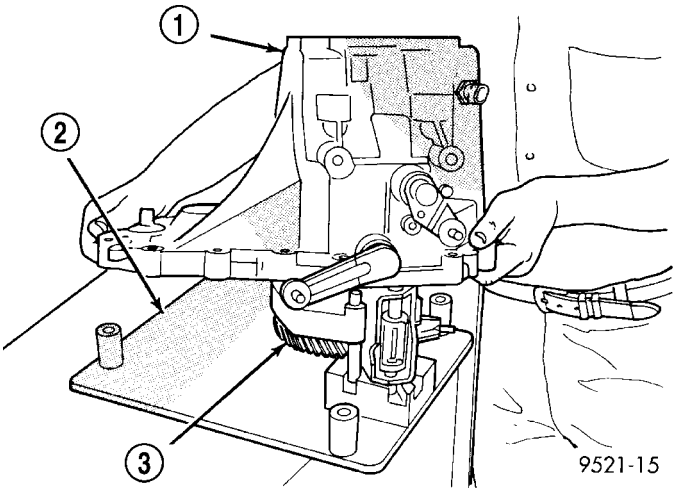

Fig. 35 Gear Case Half

1 - TRANSAXLE CASE
2 - BENCH FIXTURE
3 - GEARTRAIN

(7) Line up reverse brake friction cone lugs to the slots in the gear case (Fig. 36). Verify reverse brake shim is in position.

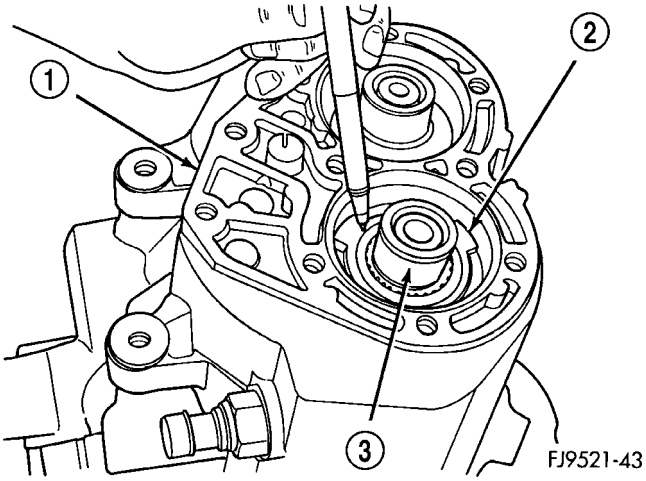

Fig. 36 Friction Cone Lugs

1 - CASE
2 - FRICTION CONE LUGS
3 - INPUT SHAFT

(8) Position input and output bearings on the shafts. Using Miller tool C-4992-1, press on input and output shaft bearings until they bottom into the case and against the shafts (Fig. 37).

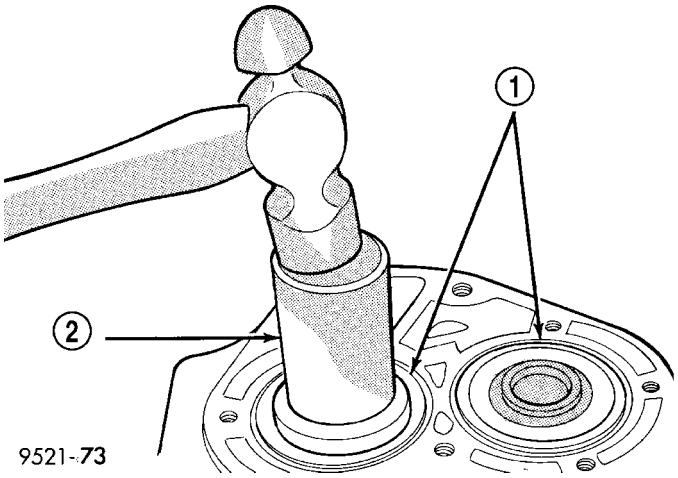

Fig. 37 Installing Input and Output Bearings

1 - INPUT AND OUTPUT BEARINGS
2 - SPECIAL TOOL C-4992-1

T350 MANUAL TRANSAXLE (Continued)

(9) Install shaft snap rings at input and output bearings (Fig. 38).

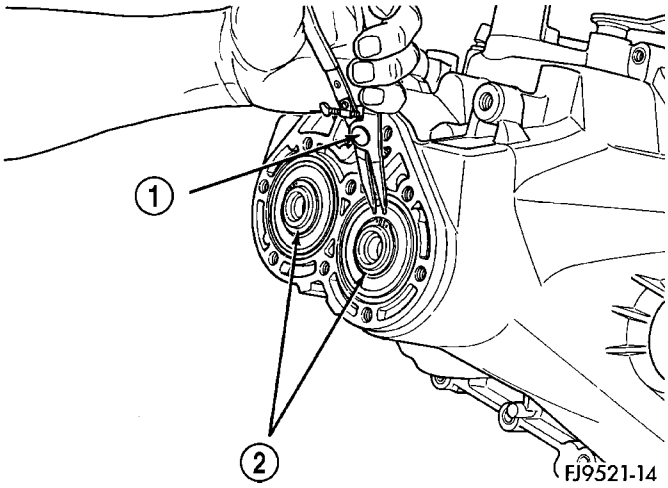

Fig. 38 Snap Rings Retaining Bearings

1 - SNAP RING PLIERS
2 - SNAP RINGS

(10) Apply Mopar® RTV sealant to end–cover outer edge and around bolt holes. Install end–cover onto gear case. Tighten end cover bolts to 29 N·m (21 ft. lbs.) torque (Fig. 39).

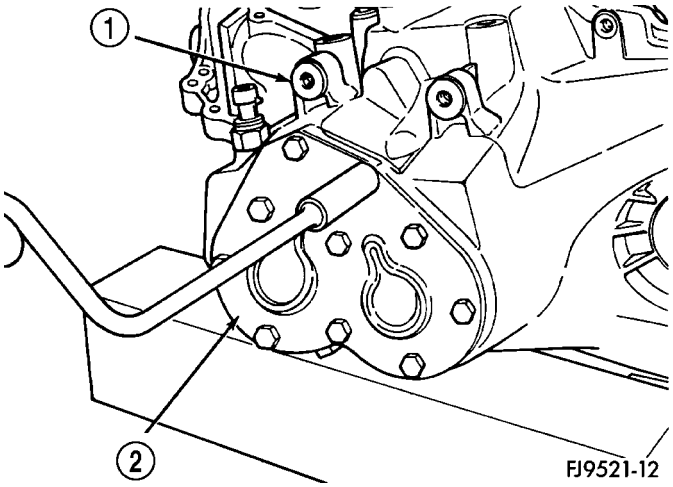

Fig. 39 Transaxle End Cover

1 - TRANSAXLE CASE
2 - END COVER

(11) Remove gear case from bench fixture.

(12) Install gear case in a holding fixture with end cover facing down.

(13) Turn selector shaft into slot on blocker assembly (Fig. 40).

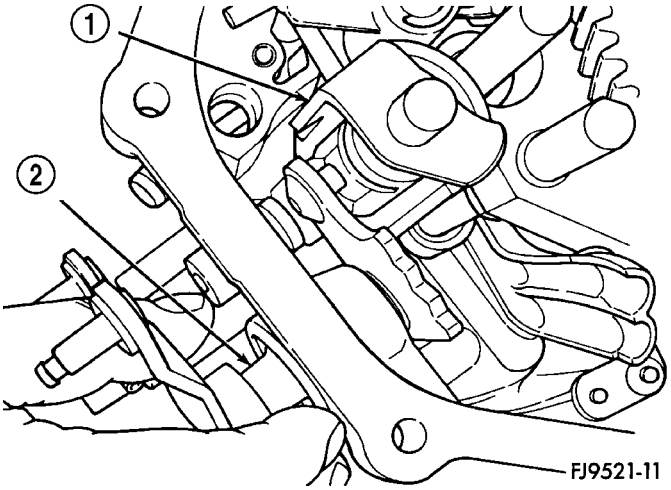

Fig. 40 Selector Shaft

1 - SHIFT ASSEMBLY
2 - SELECTOR SHAFT

(14) Push selector shaft spacer clip onto selector shaft. Install shift levers.

(15) Install reverse idler gear and spacer as shown in (Fig. 41).

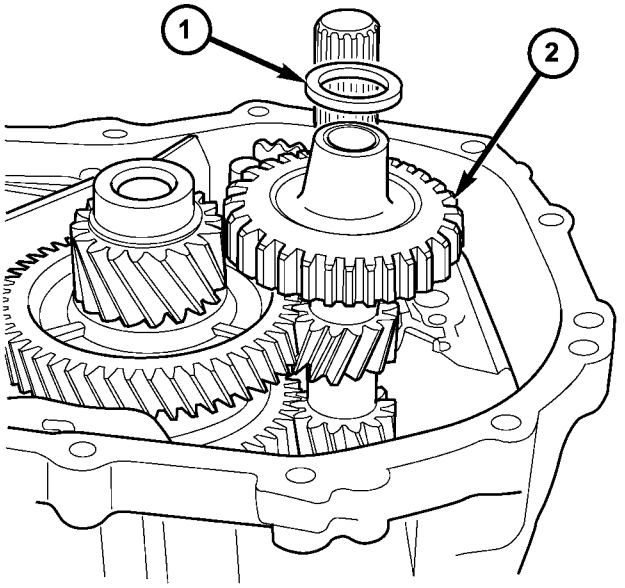

Fig. 41 Reverse Idler Gear and Spacer

1 - SPACER
2 - REVERSE IDLER GEAR

T350 MANUAL TRANSAXLE (Continued)

(16) Install reverse idler shaft (Fig. 42).

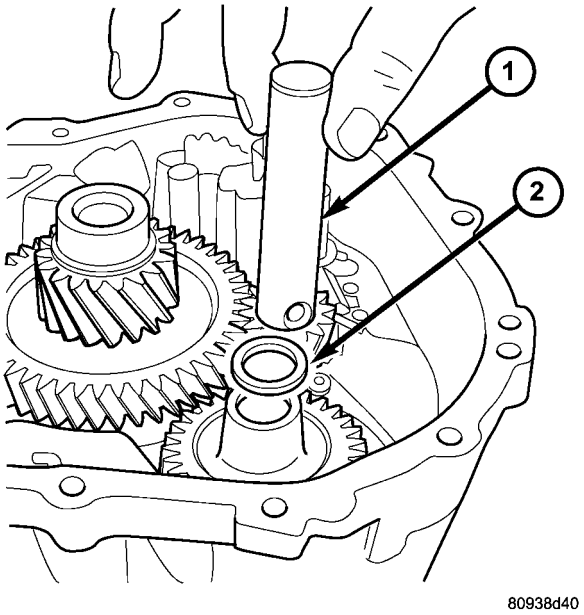

Fig. 42 Reverse Idler Shaft Installation

1 - REVERSE IDLER SHAFT
2 - SPACER

(17) Install bolt into shaft and tighten to 26 N·m (19 ft. lbs.) torque (Fig. 43).

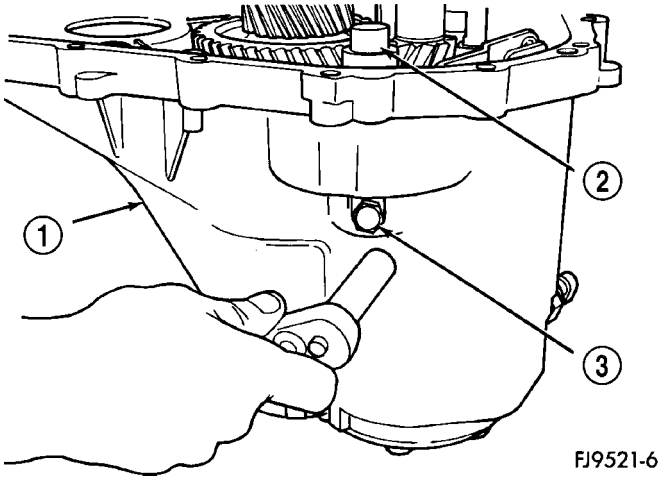

Fig. 43 Reverse Idler Shaft Bolt

1 - CASE
2 - REVERSE IDLER SHAFT
3 - REVERSE IDLER SHAFT BOLT

(18) Install reverse fork bracket and reverse lockout. Tighten screws to 11 N·m (96 in. lbs.) torque (Fig. 44) (Fig. 45).

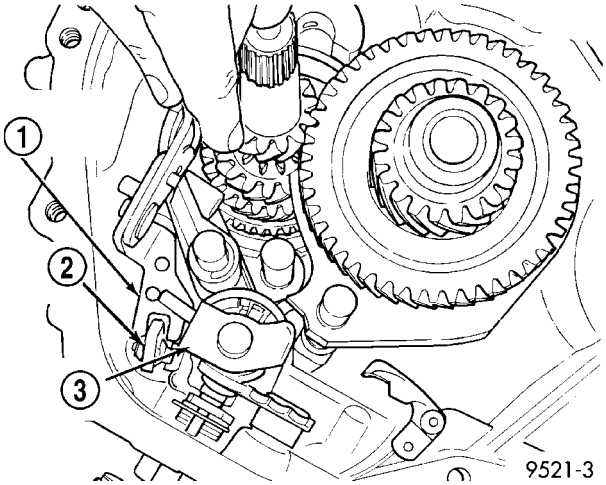

Fig. 44 Reverse Fork Bracket

1 - REVERSE FORK BRACKET
2 - REVERSE CAM BLOCKOUT
3 - SHIFT BLOCKER ASSEMBLY

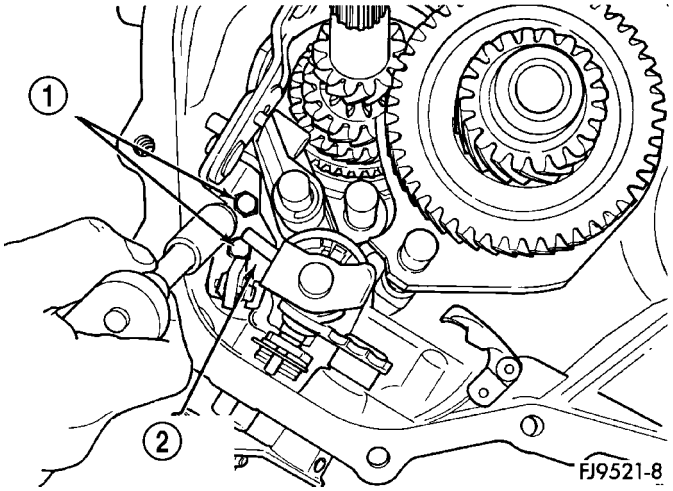

Fig. 45 Reverse Fork Screws

1 - SCREWS (2)
2 - REVERSE FORK BRACKET

T350 MANUAL TRANSAXLE (Continued)

(19) Install differential into gear case (Fig. 46).

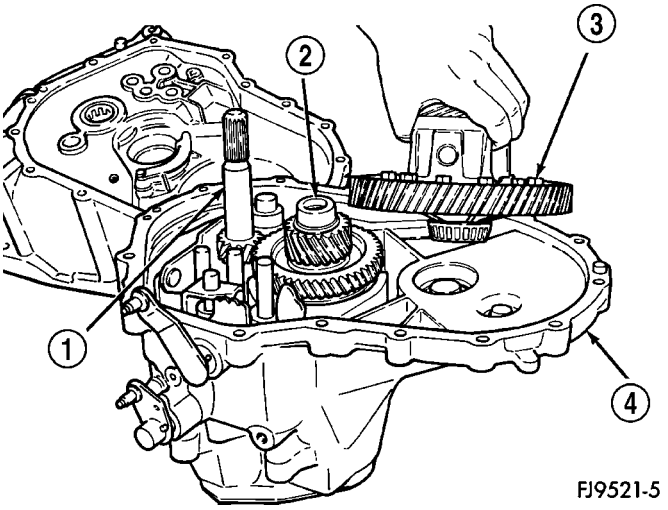

Fig. 46 Differential Assembly

1 - INPUT SHAFT
2 - OUTPUT SHAFT
3 - DIFFERENTIAL
4 - CASE

BEARING ADJUSTMENT PROCEDURE

(1) Use extreme care when removing and installing bearing cups and cones. Use only an arbor press for installation, as a hammer may not properly align the bearing cup or cone. Burrs or nicks on the bearing seat gives a false end–play reading while gauging for proper shims. Improperly seated bearing cups and cones are subject to low–mileage failure.

(2) Bearing cups and cones should be replaced if they show signs of pitting or heat distress. If distress is seen on either the cup or bearing rollers, both cup and cone must be replaced.

(3) Bearing preload and drag torque specifications must be maintained to avoid premature bearing failures. Used (original) bearings may lose up to 50% of the original drag torque after break–in. All bearing adjustments must be made with no other component interference or gear intermesh.

(4) Replace bearings as a pair: If one differential bearing is defective, replace both differential bearings, if one input shaft bearing is defective, replace both input shaft bearings.

(5) Bearing cones must not be reused if removed.

(6) Turning–torque readings should be obtained while smoothly rotating in either direction.

DIFFERENTIAL BEARING PRELOAD ADJUSTMENT

NOTE: True bearing turning–torque readings can be obtained only with the geartrain removed from the case.

(1) Remove bearing cup and existing shim from clutch bellhousing case.

(2) Press in new bearing cup into bellhousing case (or use a cup that has been ground down on the outer edge for ease of measurement).

(3) Press in new bearing cup into gear case side.

(4) Oil differential bearings with transmission fluid. Install differential assembly in transaxle gear case. Install clutch bellhousing over gear case. Install and torque case bolts to 29 N·m (21 ft. lbs.).

(5) Position transaxle with bellhousing facing down on workbench with C-clamps. Position dial indicator.

NOTE: Position of dial indicator in (Fig. 47) is for illustrative purposes only. The dial indicator should be parallel to T-Handle to obtain the most accurate reading.

(6) Apply a medium load to differential with Tool C-4995 and a T-handle, in the downward direction. Roll differential assembly back and forth a number of times. This will settle the bearings. Zero the dial indicator. To obtain end play readings, apply a medium load in an upward direction while rolling differential assembly back and forth (Fig. 47). Record end play.

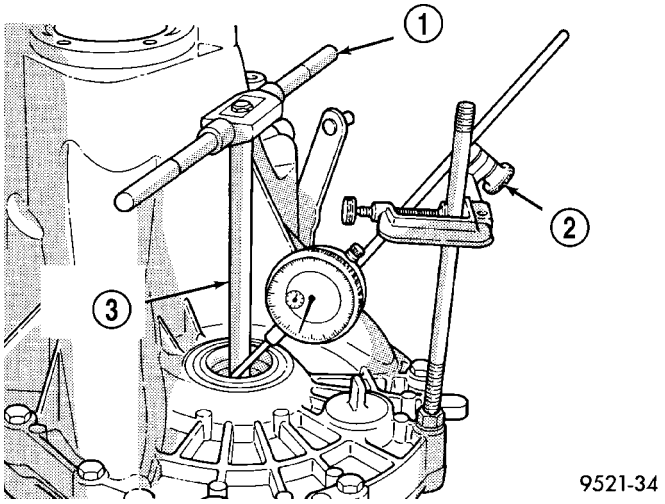

Fig. 47 Checking Differential Bearing End Play To Determine Shim Thickness

1 - T-HANDLE
2 - DIAL INDICATOR SET
3 - SPECIAL TOOL C-4995

(7) The shim required for proper bearing preload is the **total of end play, plus (constant) preload of 0.18mm (0.007 in.).** Never combine shims to obtain the required preload.

(8) Remove case bolts. Remove clutch bellhousing differential bearing cup. Install shim(s) selected in

T350 MANUAL TRANSAXLE (Continued)

Step 7. Then press the bearing cup into clutch bellhousing.

(9) Install clutch bellhousing. Install and torque case bolts to 26 N·m (19 ft. lbs.).

(10) Using Special Tool C-4995 and an inch-pound torque wrench, check turning torque of the differential assembly (Fig. 48). **The turning torque should be 6 to 12 in. lbs. If the turning torque is too high, install a 0.05mm (0.002 inch) thinner shim. If the turning torque is too low, install a 0.05mm (0.002 inch) thicker shim.**

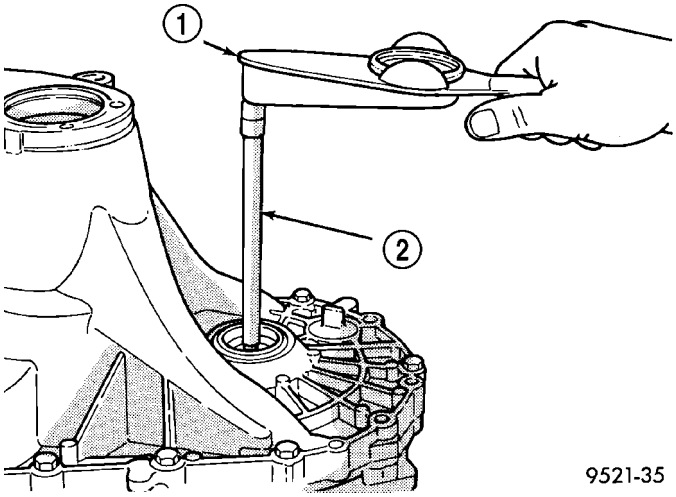

Fig. 48 Checking Differential Bearing Turning Torque

1 - INCH-POUND TORQUE WRENCH
2 - SPECIAL TOOL C-4995

(11) Recheck turning torque. Repeat Step 10 until the proper turning torque is obtained.

Once proper turning torque has been established, place gear case on the end plate. Draw a bead of Mopar® Gasket Maker, Loctite® 518, or equivalent, on the flat surface of the case mating flange. Install clutch bellhousing onto gear case. Install and tighten case bolts to 29 N·m (21 ft. lbs.).

INSTALLATION

(1) Install modular clutch assembly to transaxle input shaft.

(2) Using a helper and transmission jack, install transaxle to engine.

(3) Install and torque transaxle-to-engine bolts to 95 N·m (70 ft. lbs.).

(4) Install transaxle upper mount bracket and torque bolts to 65 N·m (48 ft. lbs.).

(5) Raise engine/transaxle assembly into position with screw jack.

(6) Install and torque transaxle upper mount-to-bracket bolts to 61 N·m (45 ft. lbs.).

(7) Remove screw jack and wood block.

(8) Install four (4) modular clutch-to-driveplate bolts. Align drive plate and modular clutch alignment marks placed upon disassembly. Start with tight-tolerance (slotted) hole, install and torque bolts to 88 N·m (65 ft. lbs.) torque.

(9) Install bellhousing dust cover.

(10) Install structural collar.

(11) Install left wheel house splash shield.

(12) Install front mount and bracket.

(13) Install rear mount to crossmember.

(14) Install rear mount bracket into position and loosely install horizontal bolt.

(15) Install halfshafts.

(16) Lower vehicle.

(17) Install three (3) rear mount bracket-to-transaxle and torque to 110 N·m (80 ft. lbs.).

(18) Raise vehicle.

(19) Torque rear mount bracket-to-transaxle horizontal bolt to 110 N·m (80 ft. lbs.).

(20) Install rear mount through-bolt and torque to 61 N·m (45 ft. lbs.).

(21) Install starter motor.

(22) Install gearshift cables to bracket and install new retaining clips.

(23) Connect gearshift crossover and selector cable to crossover and selector levers.

(24) Install clutch release cable to release lever and case. Install cap.

(25) Connect Vehicle Speed Sensor and Back-up Lamp Switch harness.

(26) Install air cleaner assembly.

(27) Connect battery negative cables.

(28) Fill transaxle with suitable amount of fluid. (Refer to 21 - TRANSMISSION/TRANSAXLE/MANUAL/FLUID - STANDARD PROCEDURE)

SPECIFICATIONS

Bolts that have thread sealer or torque lock patches should not be reused. Always install new bolts in these applications.

T350 MANUAL TRANSAXLE (Continued)

TORQUE SPECIFICATIONS

DESCRIPTION	N·m	Ft. Lbs.	In. Lbs.
Back-up Lamp Switch	24	18	—
Crossover Cable Adj. Screw	8	—	70
Drain Plug	30	—	267
Differential Ring Gear Bolts	81	60	—
Dust Shield to Transaxle	12	—	105
End Plate Cover Bolts	29	21	—
Front Engine Mount to Trans	108	80	—
Front Mount Through Bolt	61	45	—
Front Mount to Engine Bolt	54	40	—
Lateral Bending Strut to Engine	54	40	—
Lateral Bending Strut to Trans.	54	40	—
Left Mount Through Bolt	108	80	—
Left Mount to Transaxle	54	40	—
Output Bearing Race Ret. Strap	11	—	96
Reverse Fork Bracket	11	—	96
Reverse Idler Shaft Bolt	29	19	—
Shift Cable Bracket to Transaxle	28	—	250
Transaxle Case Bolts	29	21	—
Transaxle to Engine Bolt	95	70	—
Vehicle Speed Sensor	7	—	60
Vertical Bending Strut to Engine	108	80	—
Vertical Bending Strut to Trans.	108	80	—

NV T350 (A-578) MANUAL TRANSAXLE FLUID FILL

TRANSAXLE	METRIC MEASURE	U.S. MEASURE
NV T350	2.4-2.7 Liters	2.5-2.8 Quarts

T350 MANUAL TRANSAXLE (Continued)

SPECIAL TOOLS

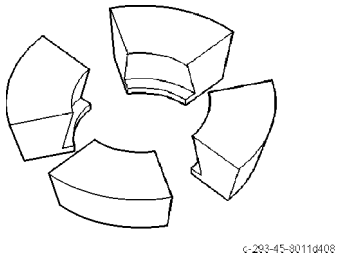

Adapter Blocks C-293–45

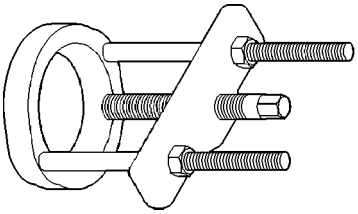

Puller Press C-293–PA

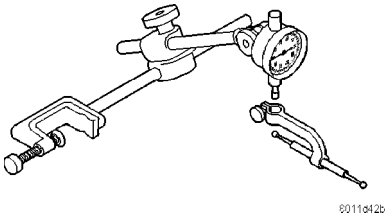

Dial Indicator C-3339

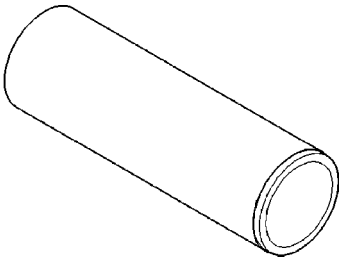

Sleeve C-3717

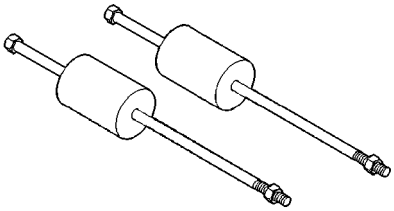

Slide Hammer C-3752

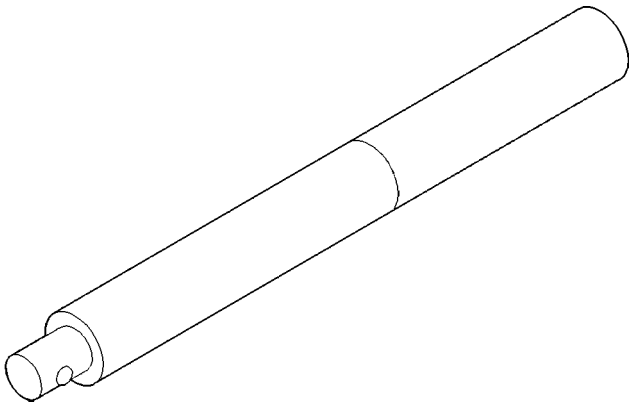

Universal Handle C-4171

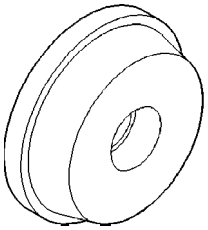

Bearing Installer C-4628

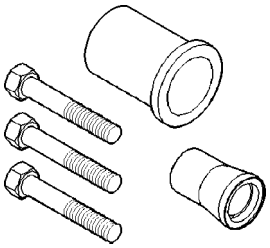

Seal Remover C-4680

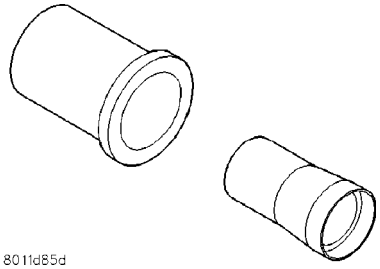

Seal Installer C-4992

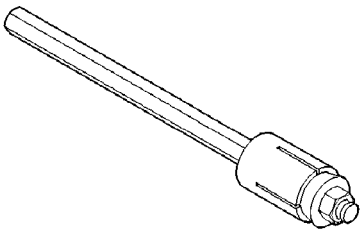

Torque Tool C-4995

T350 MANUAL TRANSAXLE (Continued)

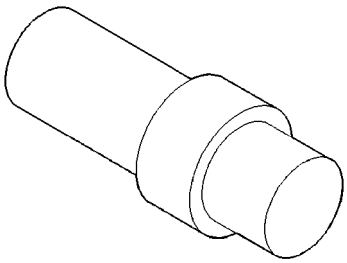

Adapter C-4996

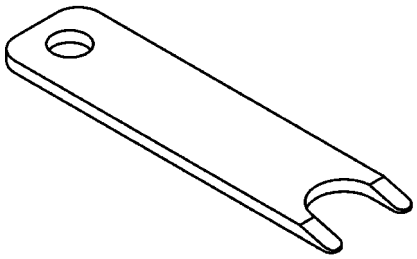

Disconnect Tool 6638A

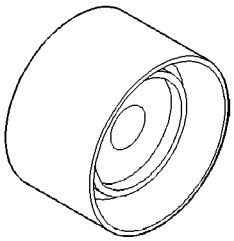

Installer L-4410

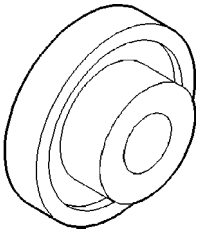

Seal Installer 6709

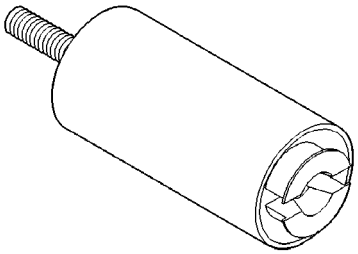

Special Jaw Set L-4518

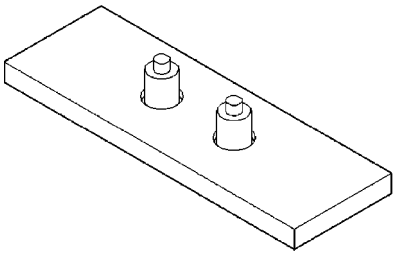

Bearing Remover 6768

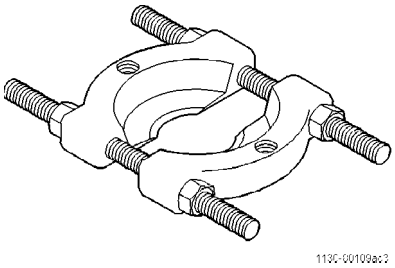

Bearing Splitter 1130

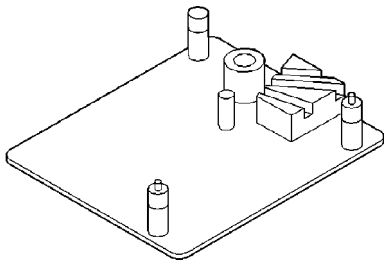

Bench Fixture 6785

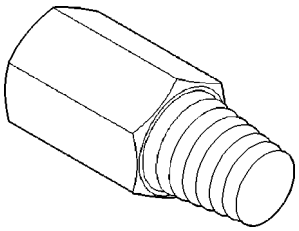

Remover 6786

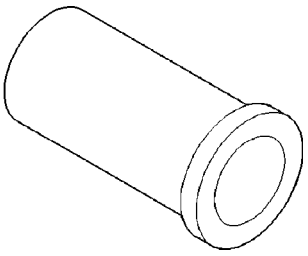

Driver 6342

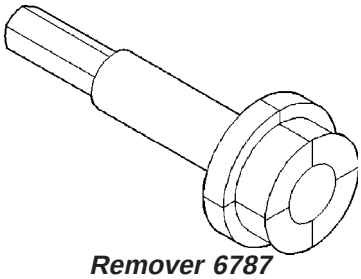

Remover 6787

BACK-UP LAMP SWITCH

REMOVAL

(1) Lift vehicle on hoist.
(2) From bottom side of vehicle, disconnect back-up lamp switch connector (Fig. 49).

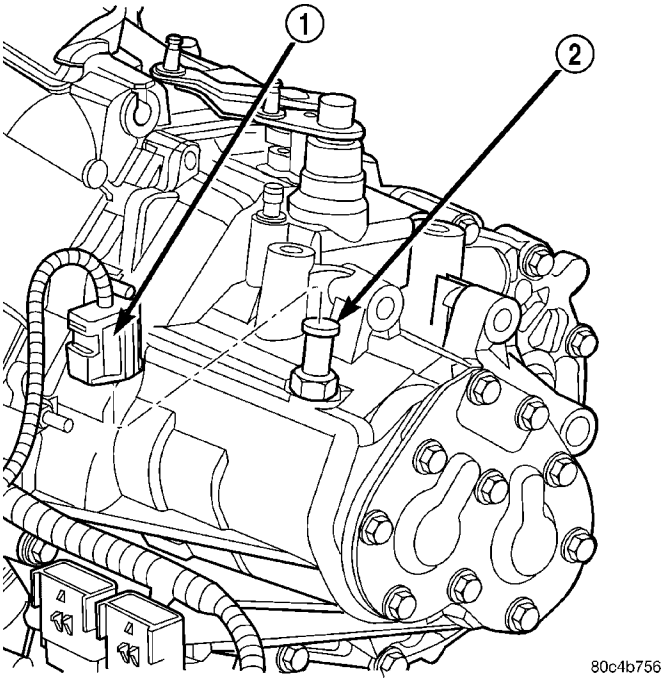

Fig. 49 BACK-UP LAMP SWITCH

1 - CONNECTOR
2 - BACK UP LAMP SWITCH

(3) Unscrew switch from transaxle.

INSTALLATION

(1) Install back-up lamp switch. Teflon tape or equivalent must be used on switch threads. Tighten switch to 24 N·m (18 ft. lbs.) torque.

CAUTION: Do not overtighten switch.

(2) Connect back-up lamp switch connector (Fig. 49).
(3) Lower vehicle.
(4) Verify back-up lamp operation.

DIFFERENTIAL

DISASSEMBLY

(1) Remove differential bearing cones (ring gear and diff. case side) using Tool C-293-PA, Adapters C-293-45, and Tool 4996 (Fig. 50) (Fig. 51).

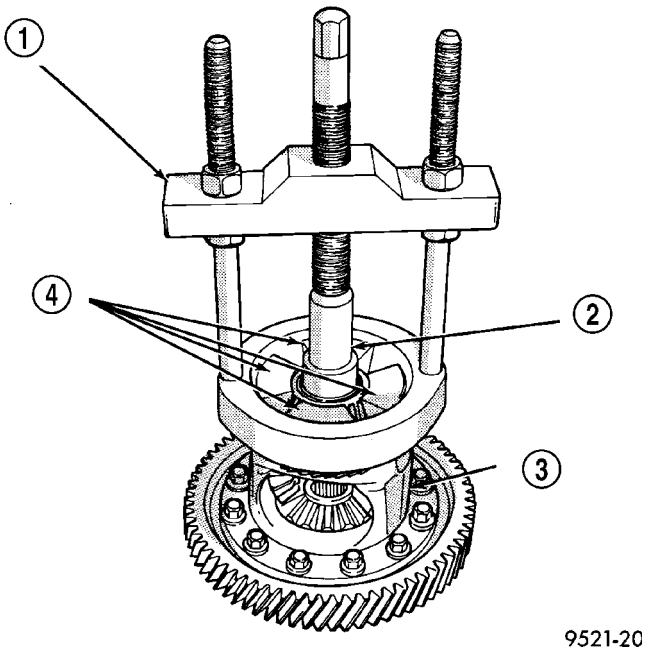

Fig. 50 Remove Differential Bearing Cone from Diff. Case Side

1 - SPECIAL TOOL C-293-PA
2 - SPECIAL TOOL C-4996
3 - DIFFERENTIAL ASSEMBLY
4 - SPECIAL TOOL C-293-45

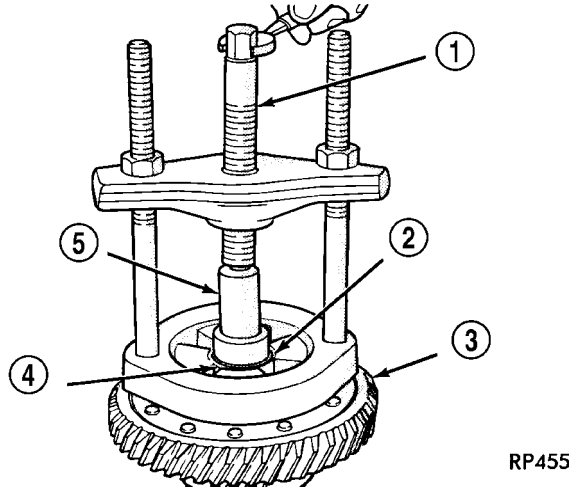

Fig. 51 Remove Differential Bearing Cone from Ring Gear Side

1 - SPECIAL TOOL C-293
2 - SPECIAL TOOL ADAPTER C-293-45 (USE 4 PIECES)
3 - DIFFERENTIAL ASSEMBLY
4 - DIFFERENTIAL BEARING CONE
5 - SPECIAL TOOL C-4996 (NOTE POSITION)

DIFFERENTIAL (Continued)

(2) Remove ring gear-to-case bolts (Fig. 52). **Discard and use NEW bolts upon assembly.**

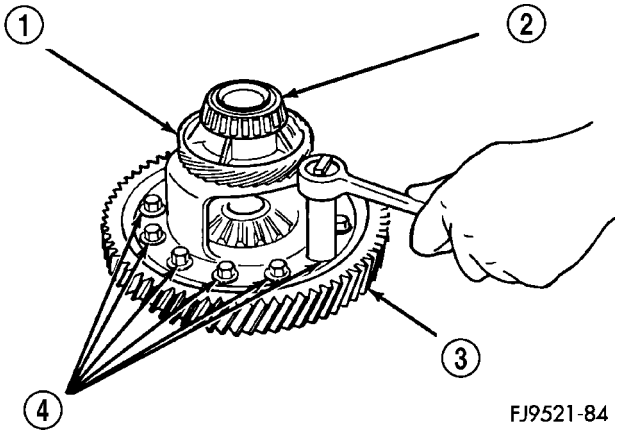

Fig. 52 Remove Ring Gear Bolts and Ring Gear

1 - SPEEDOMETER DRIVE GEAR
2 - BEARING
3 - RING GEAR
4 - RING GEAR BOLTS

(3) Using a suitable screwdriver, pry off speedometer drive gear (Fig. 53) (Fig. 54).

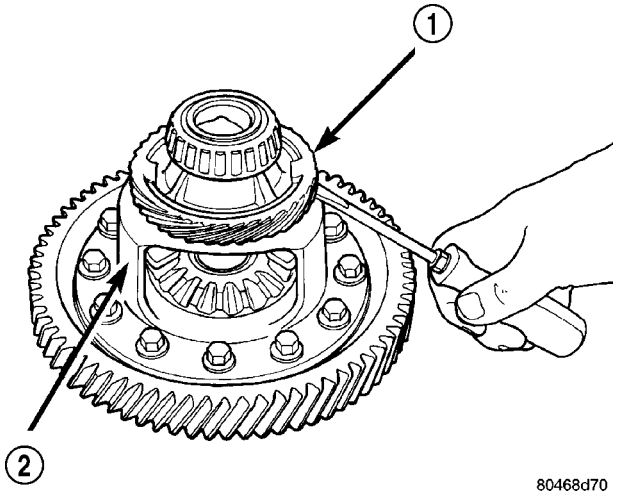

Fig. 53 Pry Off Speedometer Drive Gear

1 - SPEEDOMETER DRIVE GEAR
2 - DIFFERENTIAL ASSEMBLY

(4) Using hammer and suitable punch, remove pinion shaft retaining pin (Fig. 55) (Fig. 56).

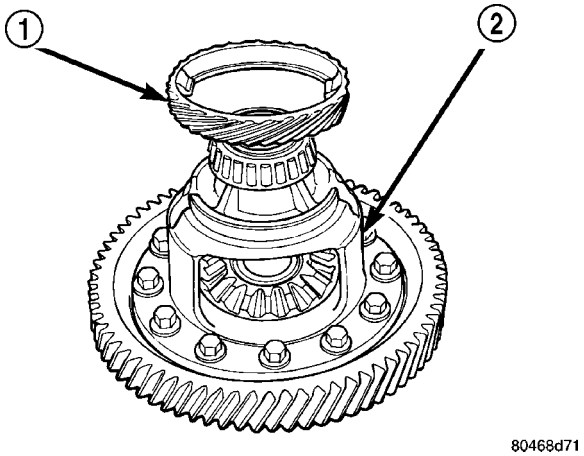

Fig. 54 Speedometer Drive Gear Removed

1 - SPEEDOMETER DRIVE GEAR
2 - DIFFERENTIAL ASSEMBLY

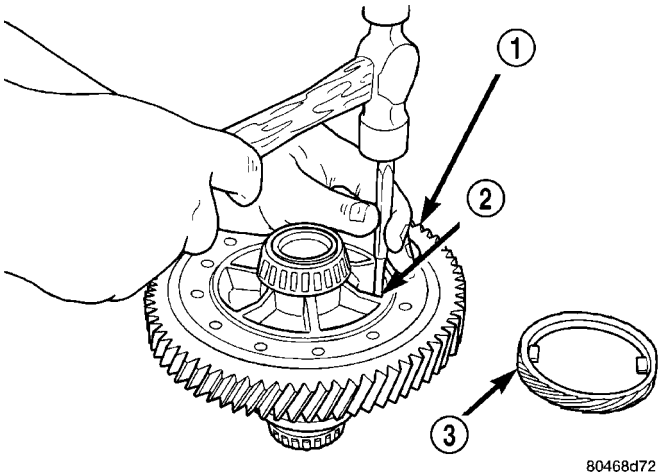

Fig. 55 Remove Pinion Shaft Retaining Pin

1 - RING GEAR
2 - PINION SHAFT RETAINING PIN
3 - SPEEDOMETER DRIVE GEAR

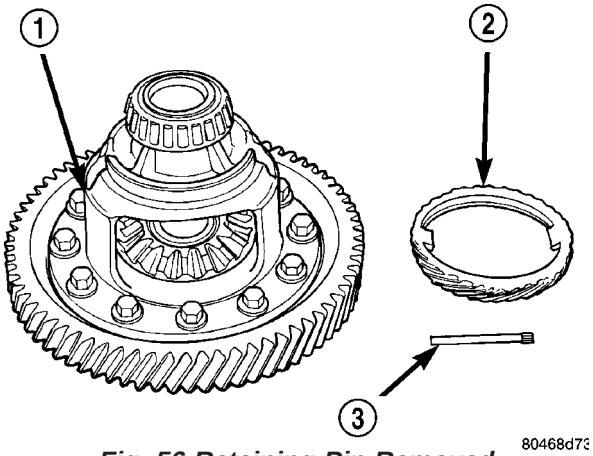

Fig. 56 Retaining Pin Removed

1 - DIFFERENTIAL ASSEMBLY
2 - SPEEDOMETER DRIVE GEAR
3 - PINION SHAFT RETAINING PIN

DIFFERENTIAL (Continued)

(5) Remove pinion shaft (Fig. 57).

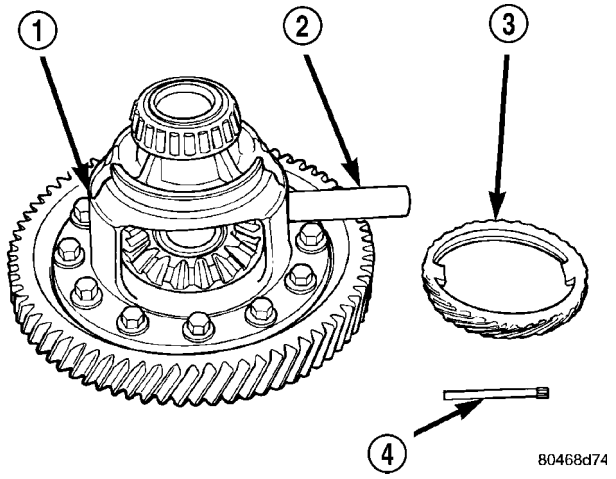

Fig. 57 Pinion Shaft Removal

1 - DIFFERENTIAL ASSEMBLY
2 - PINION SHAFT
3 - SPEEDOMETER DRIVE GEAR
4 - PINION SHAFT RETAINING PIN

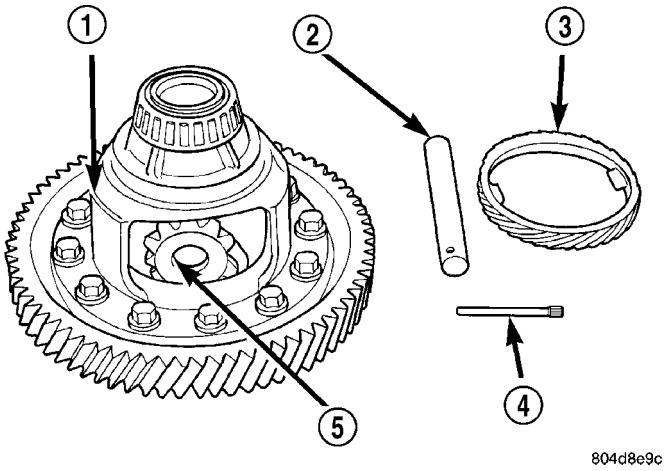

Fig. 58 Remove Pinion Gears, Side Gears, and Thrust Washers

1 - DIFFERENTIAL ASSEMBLY
2 - PINION SHAFT
3 - SPEEDOMETER DRIVE GEAR
4 - PINION SHAFT RETAINING PIN
5 - PINION GEAR (2)

(6) Remove pinion gears, side gears, and thrust washers (Fig. 58) (Fig. 59).

ASSEMBLY

(1) Assemble side gears, pinion gears, and thrust washers (Fig. 59) into case through opening and rotating into position (Fig. 58).

(2) Install pinion shaft (Fig. 57).

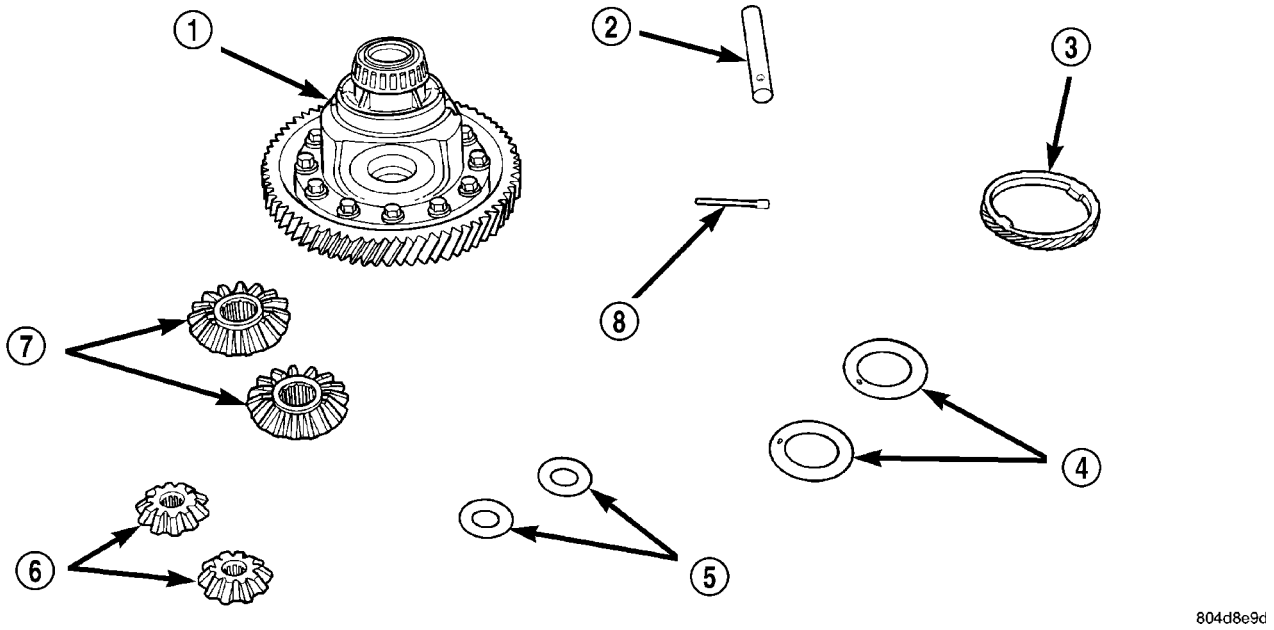

Fig. 59 Differential Components

1 - DIFFERENTIAL ASSEMBLY
2 - PINION SHAFT
3 - SPEEDOMETER DRIVE GEAR
4 - SIDE GEAR THRUST WASHERS (SELECT THICKNESS)
5 - PINION GEAR THRUST WASHERS
6 - PINION GEARS
7 - SIDE GEARS
8 - PINION SHAFT RETAINING PIN

DIFFERENTIAL (Continued)

(3) Using hammer and suitable punch, install pinion shaft retaining pin (Fig. 60).

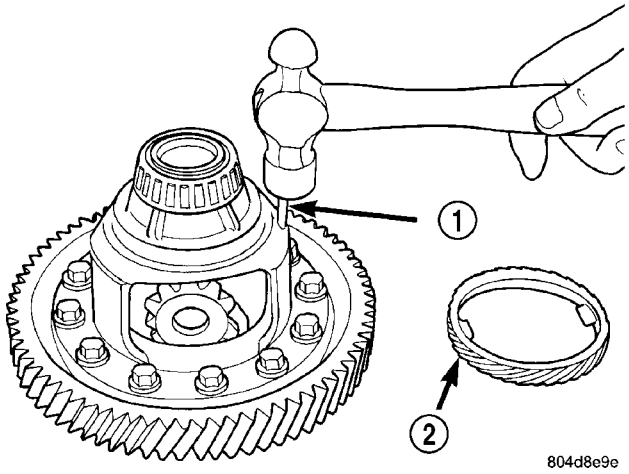

Fig. 60 Install Retaining Pin

1 - PINION SHAFT RETAINING PIN
2 - SPEEDOMETER DRIVE GEAR

(4) Stake case to retain pin as shown in (Fig. 61).

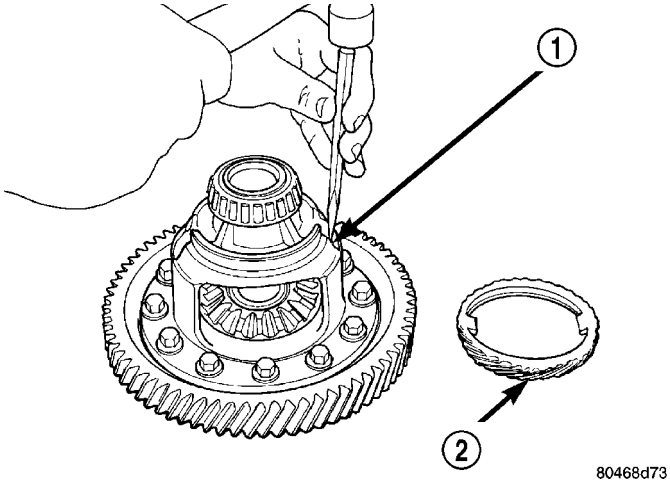

Fig. 61 Staking Retaining Pin

1 - PINION SHAFT RETAINING PIN
2 - SPEEDOMETER DRIVE GEAR

(5) Using an arbor press, Handle C-4171, and Tool L-4410, install differential side bearings to ring gear and case side (Fig. 62) (Fig. 63).

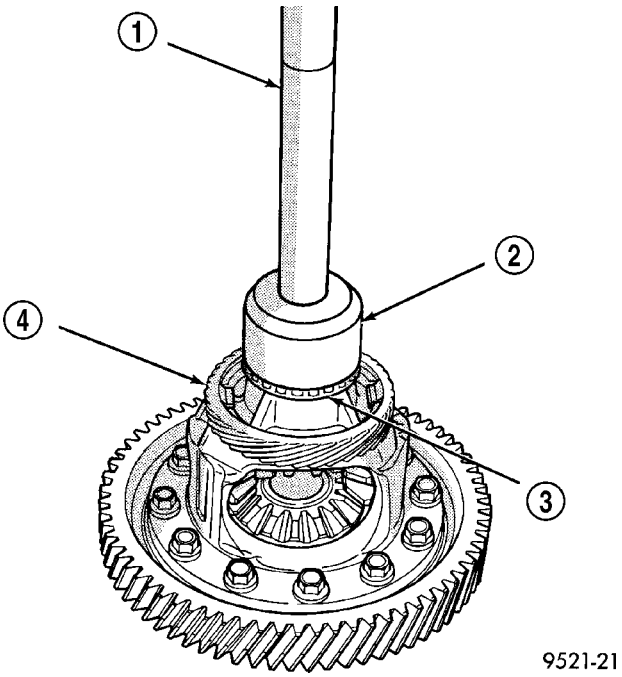

Fig. 62 Install Differential Bearing Cone to Diff. Case Side

1 - SPECIAL TOOL C-4171
2 - SPECIAL TOOL L-4410
3 - BEARING CONE
4 - SPEED SENSOR DRIVE GEAR

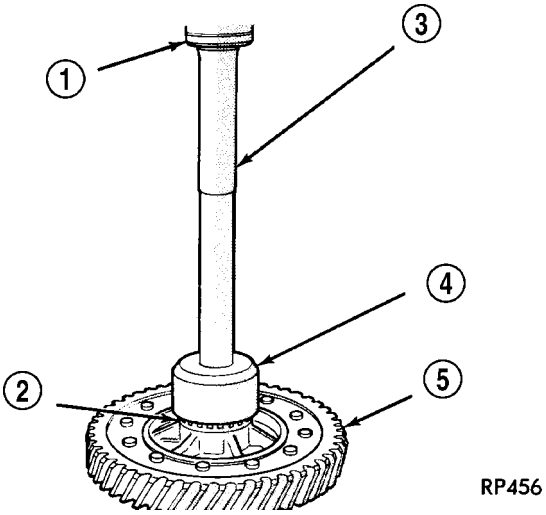

Fig. 63 Install Differential Bearing Cone to Ring Gear Side

1 - ARBOR PRESS RAM
2 - BEARING CONE
3 - SPECIAL TOOL HANDLE C-4171
4 - SPECIAL TOOL L-4410
5 - DIFFERENTIAL ASSEMBLY

DIFFERENTIAL (Continued)

(6) Install speedometer drive gear to case (Fig. 64).

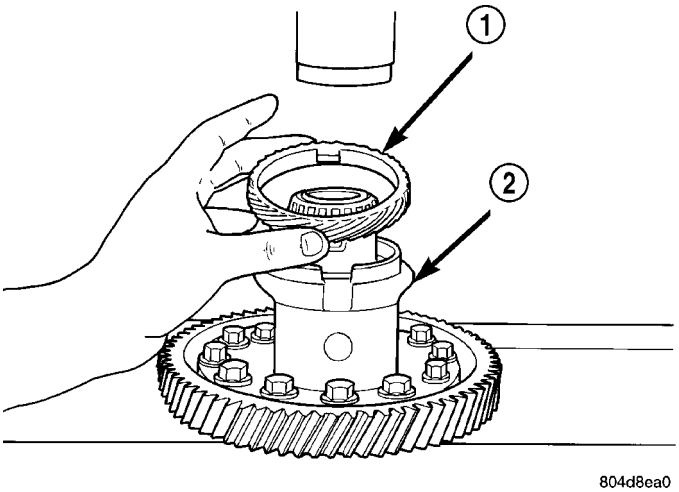

Fig. 64 Speedometer Drive Gear

1 - SPEEDOMETER DRIVE GEAR
2 - DIFFERENTIAL ASSEMBLY

(7) Using an arbor press, steel block, and Tool L-4440, press speedometer drive gear onto differential case (Fig. 65) (Fig. 66).

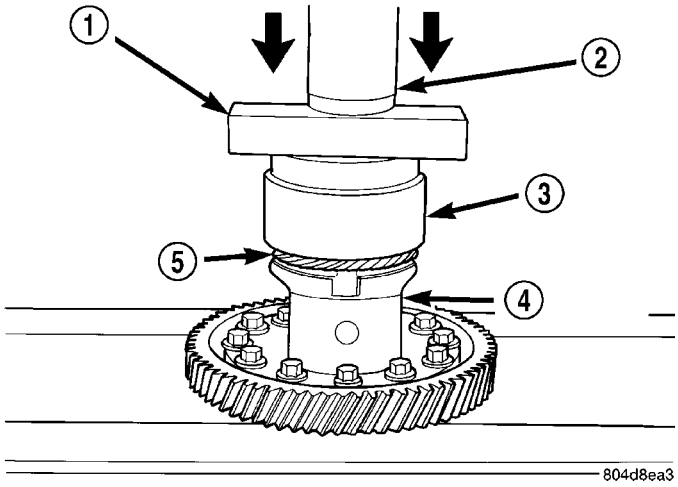

Fig. 65 Press Gear onto Differential

1 - STEEL STOCK
2 - PRESS RAM
3 - SPECIAL TOOL L-4440
4 - DIFFERENTIAL ASSEMBLY
5 - SPEEDOMETER DRIVE GEAR

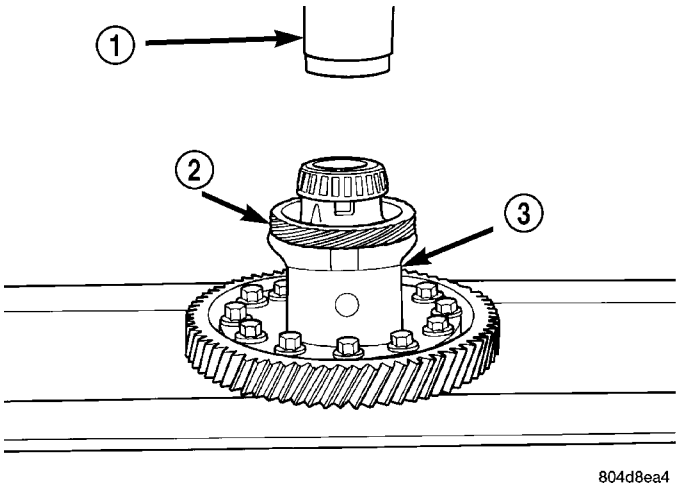

Fig. 66 Drive Gear Pressed onto Differential

1 - PRESS RAM
2 - SPEEDOMETER DRIVE GEAR
3 - DIFFERENTIAL ASSEMBLY

(8) Install ring gear to differential case. Install new bolts and torque to 81 N·m (60 ft. lbs.) torque (Fig. 67).

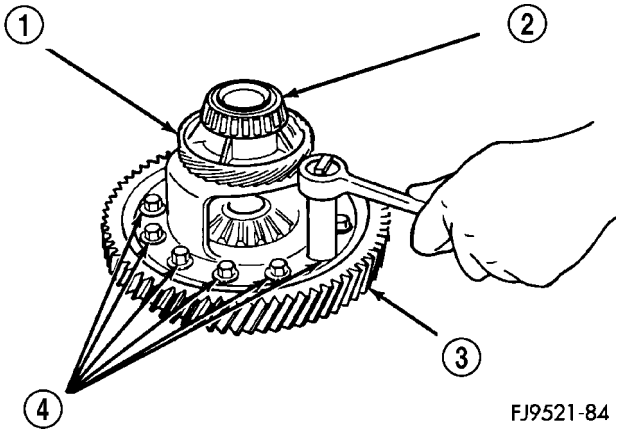

Fig. 67 Install Ring Gear and Bolts

1 - SPEEDOMETER DRIVE GEAR
2 - BEARING
3 - RING GEAR
4 - RING GEAR BOLTS

DIFFERENTIAL (Continued)

Measure and Adjust Side Gear End-Play

(1) Rotate the assembly two full revolutions both clockwise and counterclockwise. Set up dial indicator as shown and record end play (Fig. 68) (Fig. 69). Rotate side gear 90 degrees and take another measurement. Again, rotate side gear 90 degrees and record a final measurement.

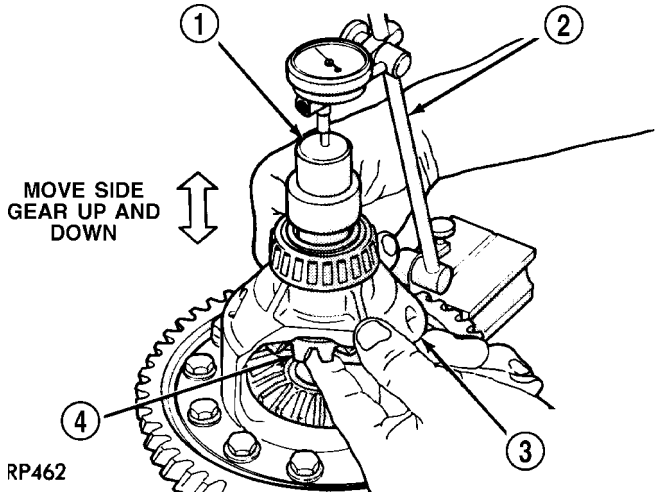

Fig. 68 Checking Side Gear End Play (Typical)

1 - SPECIAL TOOL C-4996 (NOTE POSITION)
2 - DIAL INDICATOR SET
3 - DIFFERENTIAL ASSEMBLY
4 - SIDE GEAR

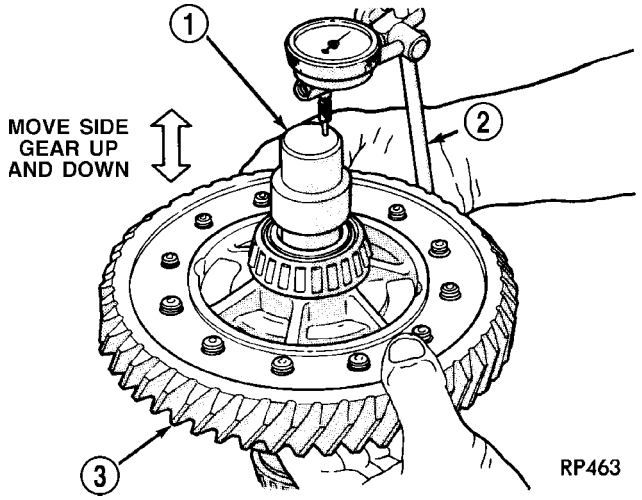

Fig. 69 Checking Side Gear End Play—Typical

1 - SPECIAL TOOL C-4996 (NOTE POSITION)
2 - DIAL INDICATOR SET
3 - DIFFERENTIAL ASSEMBLY

(2) Using the smallest end play recorded, shim that side gear to within 0.001 to 0.013 inch. The other side gear should be checked using the same procedure.

CAUTION: Side gear end play must be within 0.001 to 0.013 inch. Five select thrust washers are available: 0.027, 0.032, 0.037, 0.042, and 0.047 inch.

ADJUSTMENTS

DIFFERENTIAL BEARING PRELOAD ADJUSTMENT / SHIM SELECTION

Measure and adjust differential side bearing preload during any transaxle service, especially when the following components are replaced:

- Transaxle gear case
- Clutch bellhousing case
- Differential case
- Differential bearings

NOTE: True bearing turning torque readings can be obtained only with the geartrain removed from the case.

(1) Remove bearing cup and existing shim from clutch bellhousing case.

(2) Press in new bearing cup into bellhousing case (or use a cup that has been ground down on the outer edge for ease of measurement).

(3) Press in new bearing cup into gear case side.

(4) Oil differential bearings with transmission fluid. Install differential assembly in transaxle gear case. Install clutch bellhousing over gear case. Install and torque case bolts to 29 N·m (21 ft. lbs.).

(5) Position transaxle with bellhousing facing down on workbench with C-clamps. Position dial indicator.

NOTE: Indicator is set up as shown for illustrative purposes only (Fig. 70). Indicator must be parallel to T-Handle to obtain the most accurate reading.

(6) Apply a medium load to differential with Tool C-4995 and a T-handle, in the downward direction. Roll differential assembly back and forth a number of times. This will settle the bearings. Zero the dial indicator. To obtain end play readings, apply a medium load in an upward direction while rolling differential assembly back and forth (Fig. 70). Record end play.

(7) The shim required for proper bearing preload is the **total of end play, plus (constant) preload of 0.18 mm (0.007 in.).** Never combine shims to obtain the required preload.

(8) Remove case bolts. Remove clutch bellhousing differential bearing cup. Install shim(s) selected in Step 7. Then press the bearing cup into clutch bellhousing.

DIFFERENTIAL (Continued)

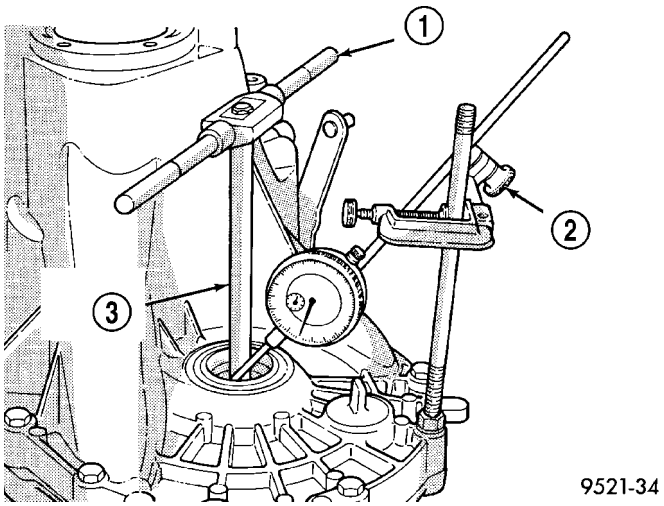

Fig. 70 Checking Differential Bearing End Play to Determine Shim Thickness

1 - T-HANDLE
2 - DIAL INDICATOR SET
3 - SPECIAL TOOL C-4995

(9) Install clutch bellhousing. Install and torque case bolts to 26 N·m (19 ft. lbs.).

(10) Using Special Tool C-4995 and an inch-pound torque wrench, check turning torque of the differential assembly (Fig. 71). **The turning torque should be 6 to 12 in. lbs. If the turning torque is too high, install a 0.05 mm (0.002 inch) thinner shim. If the turning torque is too low, install a 0.05mm (0.002 inch) thicker shim.**

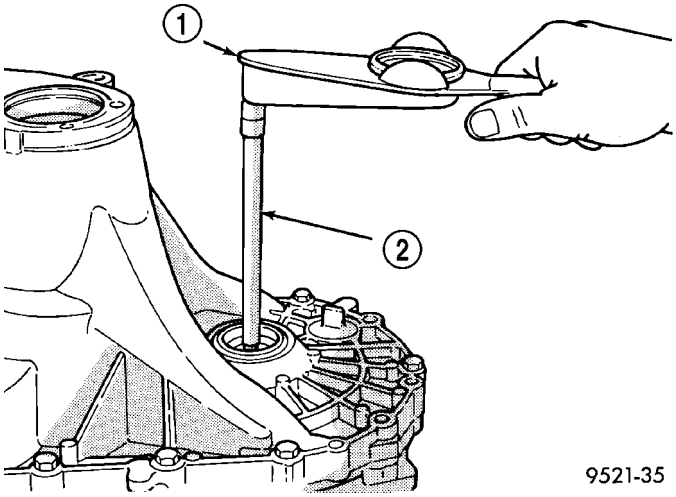

Fig. 71 Checking Differential Bearing Turning Torque

1 - INCH-POUND TORQUE WRENCH
2 - SPECIAL TOOL C-4995

(11) Recheck turning torque. Repeat Step 10 until the proper turning torque is obtained.

DIFFERENTIAL BEARING CUPS

REMOVAL

(1) Remove differential assembly from gear case using the procedure outlined in this group.

(2) Install Miller tool #L-4518 into the differential bearing cup (Fig. 72).

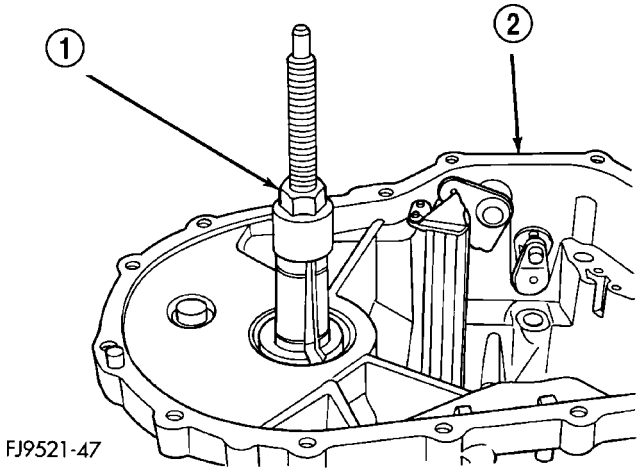

Fig. 72 Tool Installed in Bearing

1 - SPECIAL TOOL L-4518
2 - GEAR CASE

(3) Install the tool cup over the tool (Fig. 73).

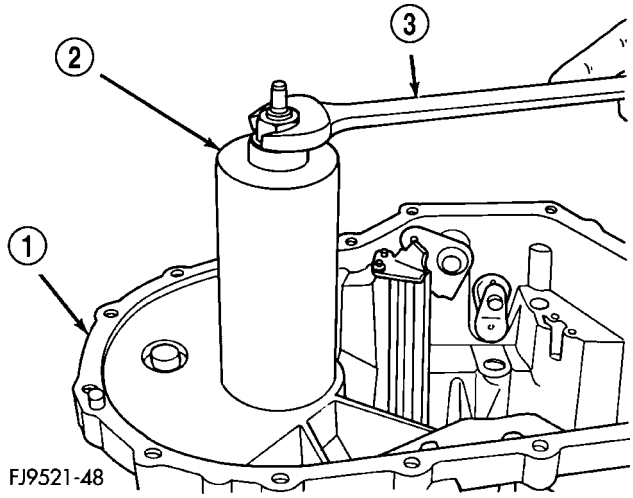

Fig. 73 Tool Cup Installed

1 - GEAR CASE
2 - SPECIAL TOOL L-4518
3 - WRENCH

(4) Tighten the tool until the race is removed from the case.

DIFFERENTIAL BEARING CUPS (Continued)

INSTALLATION

(1) Position the bearing cup into the case.

(2) Install the bearing cup onto Miller tool #L-4520.

(3) Using Miller tool #L-4520 and C-4171 driver, install differential bearing cup into the transaxle case.

FLUID

STANDARD PROCEDURE - FLUID DRAIN AND FILL

NOTE: The fluid required in this transaxle is Mopar® ATF+4 (Automatic Transmission Fluid—Type 9602).

All T350 transaxles are equipped with a fill plug. The fill plug is located on the left side of the transaxle differential area (Fig. 74). The fluid level should be within 3/16 inch from the bottom of the transaxle fill hole (vehicle must be level when checking).

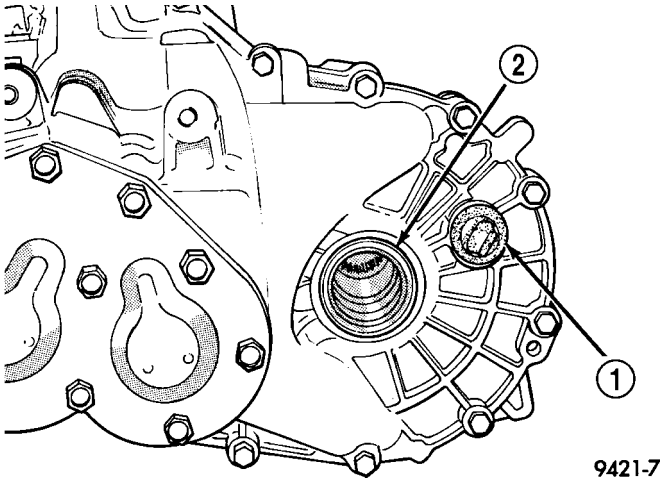

Fig. 74 Fill Plug Location

1 - RUBBER FILL PLUG
2 - LEFT DRIVESHAFT SEAL

All T350 transaxles are equipped with a drain plug. The drain plug is located on the lower right side of the transaxle differential housing (Fig. 75). Tighten drain plug to 28 N·m (250 in. lbs.)

Fill transaxle to capacity. Refer to following chart. Wipe the outside of the transaxle if any lubricant spills.

NV T350 MANUAL TRANSAXLE FLUID FILL

TRANSAXLE	METRIC MEASURE	U.S. MEASURE
NV T350	2.4-2.7 Liters	2.5-2.8 Quarts

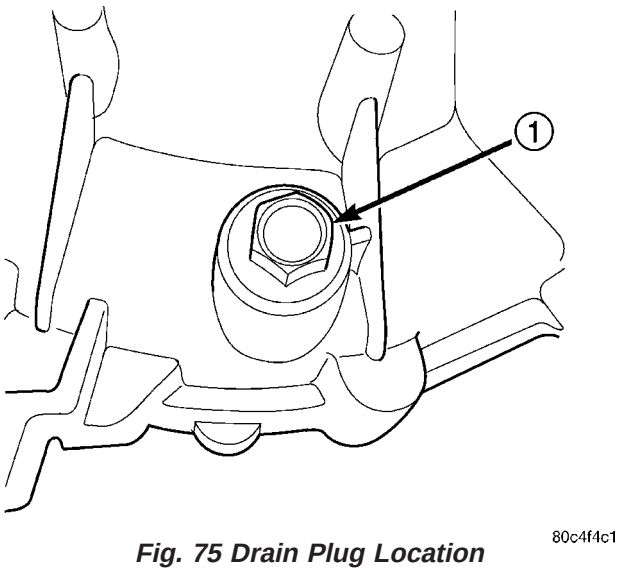

Fig. 75 Drain Plug Location

1 - DRAIN PLUG

GEAR SHIFT CABLE

REMOVAL

(1) Disconnect battery negative cable.

(2) Remove gearshift knob/boot assembly. Lift boot off of console and disengage knob retainers to free.

(3) Remove center console assembly (Fig. 76).

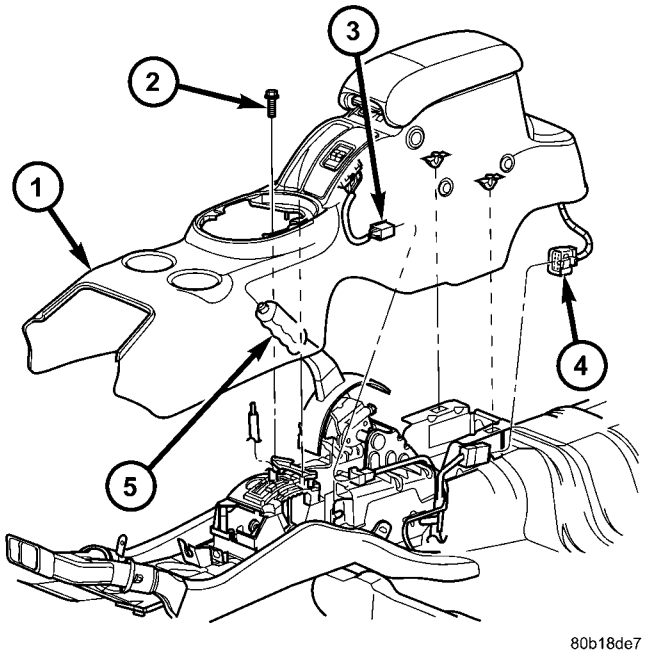

Fig. 76 Center Console Assembly—Typical

1 - CENTER CONSOLE
2 - SCREW
3 - IF EQUIPPED
4 - IF EQUIPPED
5 - PARK BRAKE HANDLE

GEAR SHIFT CABLE (Continued)

(4) Disconnect crossover and selector cables from shift mechanism.

(5) Remove crossover and selector cable retaining clips (Fig. 77) from shift mechanism and disconnect cables.

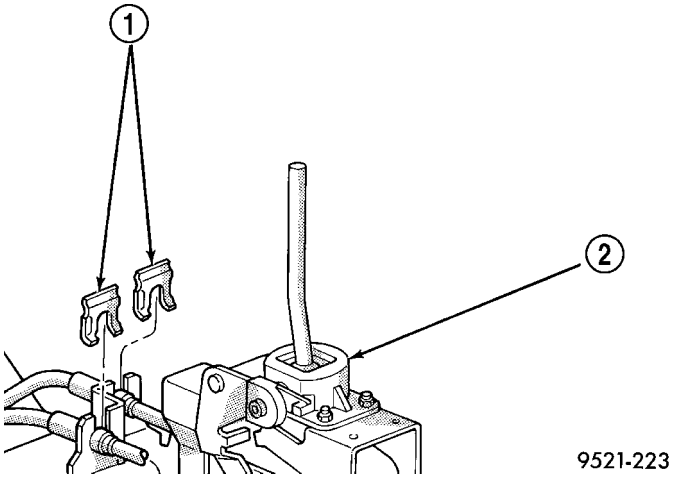

Fig. 77 Cable Retaining Clips

1 - CABLE CLIPS
2 - SHIFTER

(6) Remove air cleaner assembly.

(7) Disconnect crossover and selector cables from transaxle (Fig. 78).

(8) Remove retainer clips and disengage cables from bracket (Fig. 78).

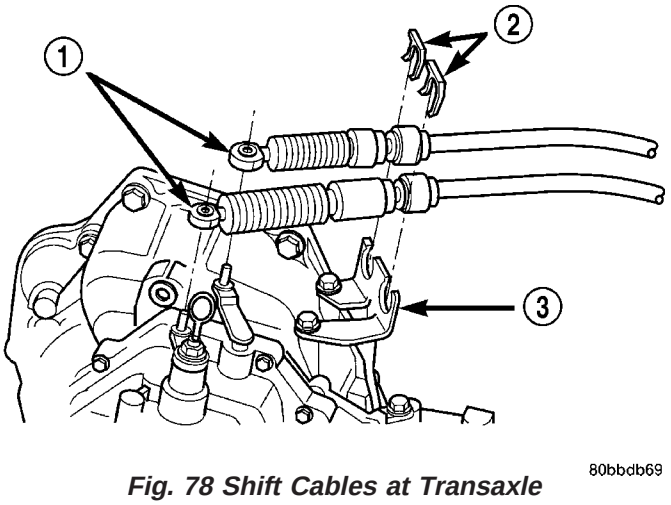

Fig. 78 Shift Cables at Transaxle

1 - SHIFT CABLES
2 - CLIPS
3 - BRACKET

(9) Raise vehicle on hoist.

(10) Remove cable grommet from floor pan.

(11) Pull cables forward and remove from under vehicle.

INSTALLATION

(1) Install gearshift cable assembly into engine compartment from under vehicle.

(2) Feed cable assembly through hole in floor pan and secure grommet to floor pan.

(3) Lower vehicle.

(4) Install gearshift cables to mounting bracket (Fig. 78). Secure with new clips.

(5) Connect gearshift cables to transaxle crossover and selector levers (Fig. 78).

(6) Install air cleaner assembly.

(7) Connect crossover and selector cables to mechanism and secure with clips (Fig. 77).

NOTE: Only the crossover cable is adjustable. The selector cable does not have any adjustment capabilities.

(8) **Adjust crossover cable as follows:**

(a) Loosen adjusting screw on crossover cable at shifter (Fig. 79).

(b) The gearshift mechanism and transaxle crossover lever are spring-loaded and self-centering. Alignment pins used in the past are not required anymore. Allow gearshift mechanism and transaxle crossover lever to relax in their neutral positions. To ensure the gearshift lever is in the proper position, place the shifter in 3rd or 4th gear if necessary. Torque adjustment screw to 8 N·m (70 in. lbs.). Care must be taken to avoid moving the shift mechanism off-center during screw tightening.

(c) Perform functional check by shifting transaxle into all gears.

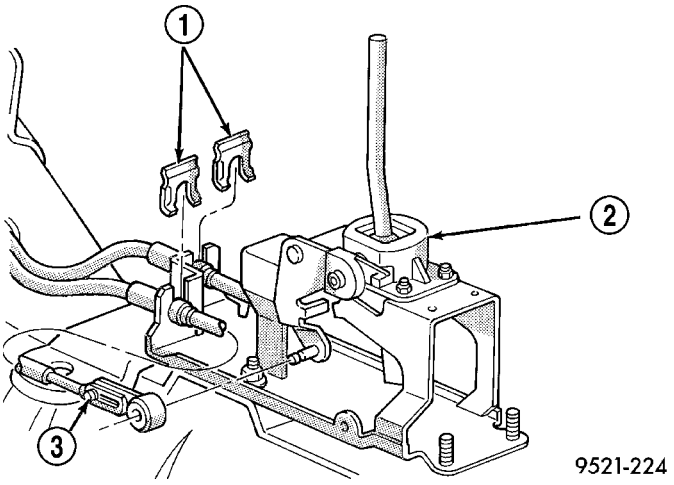

Fig. 79 Crossover and Selector Cables at Shift Mechanism

1 - CABLE CLIPS
2 - SHIFTER
3 - ADJUSTMENT SCREW

(9) Install center console assembly (Fig. 76).

(10) Install gearshift knob/boot assembly. Ensure knob retaining tabs are secured to shift lever. Snap boot to console at retainer locations.

GEAR SHIFT MECHANISM

REMOVAL

(1) Disconnect battery negative cable.
(2) Remove gearshift knob/boot assembly.
(3) Remove center console assembly (Fig. 80).

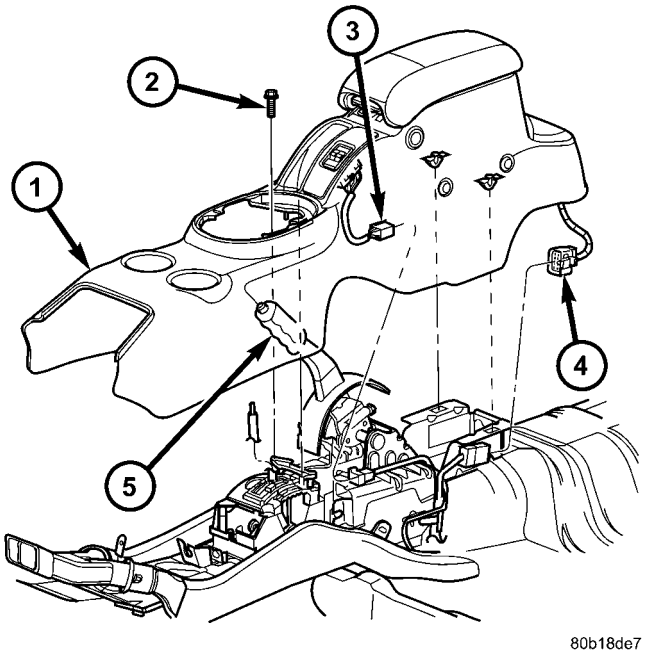

Fig. 80 Center Console Assembly—Typical

1 - CENTER CONSOLE
2 - SCREW
3 - IF EQUIPPED
4 - IF EQUIPPED
5 - PARK BRAKE HANDLE

(4) Disconnect crossover cable from mechanism.
(5) Disconnect selector cable from mechanism.
(6) Remove crossover and selector cable retaining clips (Fig. 81) from mechanism and disconnect cables.

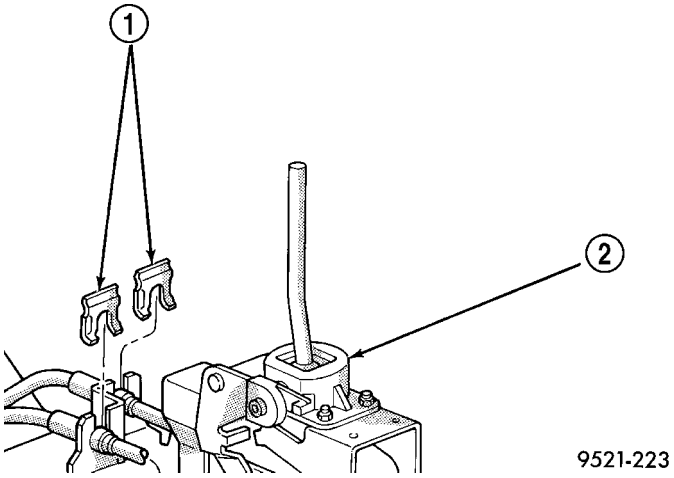

Fig. 81 Cable Retaining Clips

1 - CABLE CLIPS
2 - SHIFTER

(7) Remove shift mechanism-to-floor pan bolts and remove mechanism (Fig. 82).

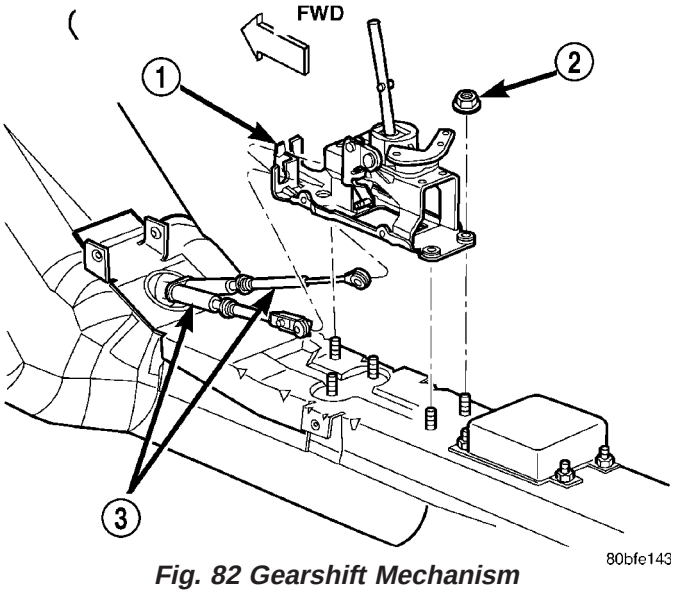

Fig. 82 Gearshift Mechanism

1 - GEARSHIFT MECHANISM
2 - NUT (5)
3 - GEARSHIFT CABLES

INSTALLATION

(1) Install gear shift mechanism to floor pan (Fig. 82). Install and torque four (4) nuts to 25 N·m (18 ft. lbs.).

(2) Install crossover and selector cables into position. Secure with retaining clips (Fig. 83).

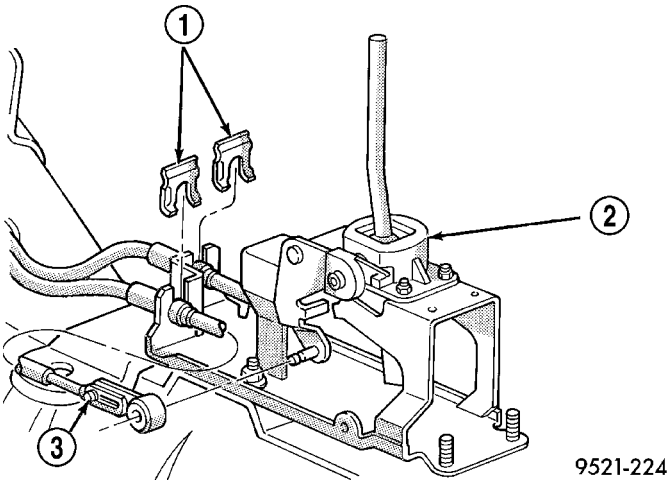

Fig. 83 Crossover and Selector Cables at Shift Mechanism

1 - CABLE CLIPS
2 - SHIFTER
3 - ADJUSTMENT SCREW

NOTE: Only the crossover cable is adjustable. The selector cable does not have any adjustment capabilities.

GEAR SHIFT MECHANISM (Continued)

(3) **Adjust crossover cable as follows:**

(a) Loosen adjusting screw on crossover cable at shifter (Fig. 83).

(b) The gearshift mechanism and transaxle crossover lever are spring-loaded and self-centering. Alignment pins used in the past are not required anymore. Allow gearshift mechanism and transaxle crossover lever to relax in their neutral positions. To ensure the gearshift lever is in the proper position, place the shifter in 3rd or 4th gear if necessary. Torque adjustment screw to 8 N·m (70 in. lbs.). Care must be taken to avoid moving the shift mechanism off-center during screw tightening.

(c) Perform functional check by shifting transaxle into all gears.

(4) Install center console assembly (Fig. 80).

(5) Install gearshift knob/boot assembly. Ensure knob retaining tabs are secured to shift lever. Snap boot to console at retainer locations.

INPUT BEARING AND SLEEVE

REMOVAL

The input bearing is a one–piece bearing and sleeve unit (Fig. 84). The sleeve is the slide point for the clutch–release bearing and lever.

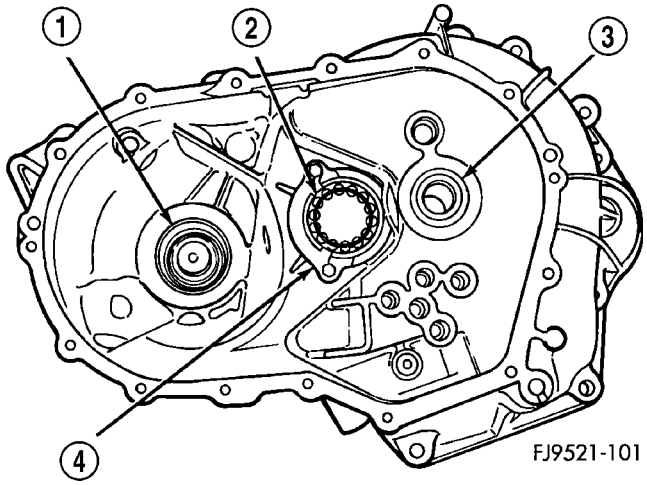

Fig. 84 Input Bearing And Sleeve

1 - DIFFERENTIAL BEARING
2 - OUTPUT BEARING
3 - INPUT BEARING
4 - BEARING RETAINER

(1) Install tool #6342 over input bearing on the gear case side of the transaxle clutch housing.

(2) Press the input bearing out of the housing (Fig. 85).

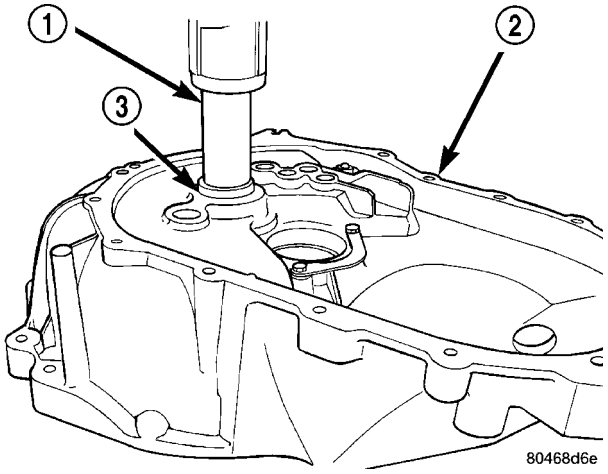

Fig. 85 Input Bearing Removal

1 - SPECIAL TOOL 6342
2 - BELLHOUSING HALF
3 - INPUT BEARING AND SLEEVE

INSTALLATION

(1) Apply coating of Loctite® sealant on bearing outer diameter. Position sleeve and bearing assembly at input bearing bore.

(2) Install tool #C-4680-1 over input bearing (Fig. 86).

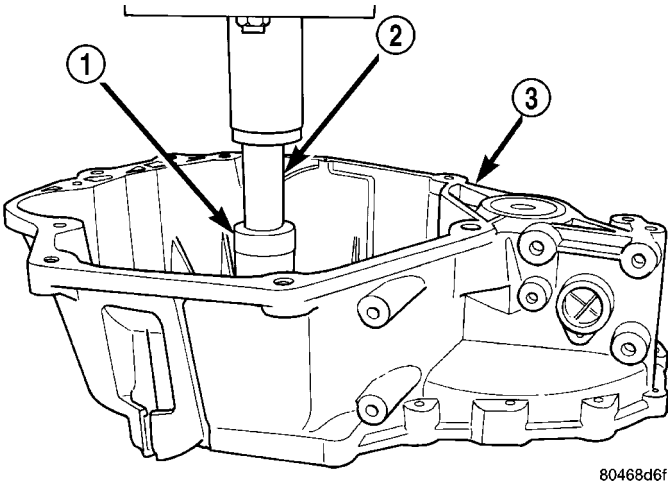

Fig. 86 Input Bearing Tool

1 - SPECIAL TOOL C-4680-1
2 - SPACER
3 - BELLHOUSING HALF

INPUT BEARING AND SLEEVE (Continued)

(3) Using a suitable spacer tool and shop press, install input bearing into bore until it is fully seated (Fig. 87).

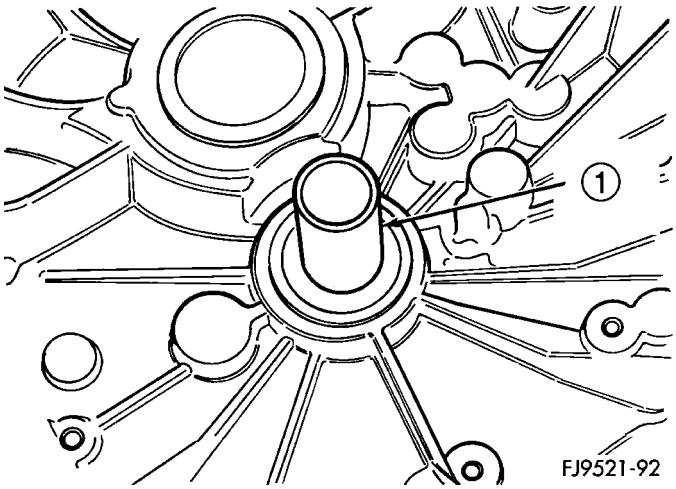

Fig. 87 Input Bearing Installed

1 - SLEEVE AND BEARING ASSEMBLY

INPUT SHAFT

DISASSEMBLY

Before disassembly of the input shaft, it is necessary to check the synchronizer stop ring gap. Use a feeler gauge to measure the gaps between the stop rings and the speed gears. The correct gaps are listed below:

- 1st - 0.522-2.208 mm (0.021-0.087 in)
- 2nd - 0.522-2.208 mm (0.021-0.087 in)
- 3rd - 0.73-1.53 mm (0.029-0.060 in)
- 4th - 0.77-1.57 mm (0.030-0.062 in).
- 5th - 0.73-1.53 mm (0.029-0.060 in)

If a stop ring gap does not fall within the specifications, it must be inspected for wear and replaced. If the 1st or 2nd synchronizer stop ring is worn beyond specifications, the complete output shaft assembly must be replaced.

The input shaft incorporates the 3rd, 4th, and 5th speed gears and synchronizers on the assembly (Fig. 88).

(1) Install bearing splitter behind 5th speed gear. Remove snap ring at 5th synchronizer hub on input shaft (Fig. 89).

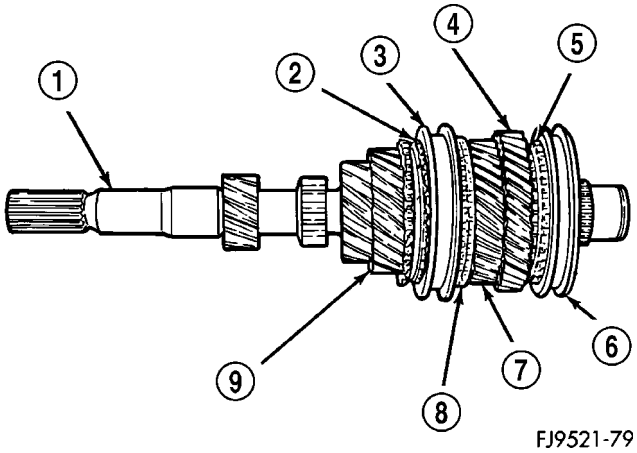

Fig. 88 Input Shaft

1 - INPUT SHAFT
2 - STOP RING
3 - SLEEVE
4 - 5TH SPEED GEAR
5 - STOP RING
6 - SLEEVE
7 - 4TH SPEED GEAR
8 - STOP RING
9 - 3RD SPEED GEAR

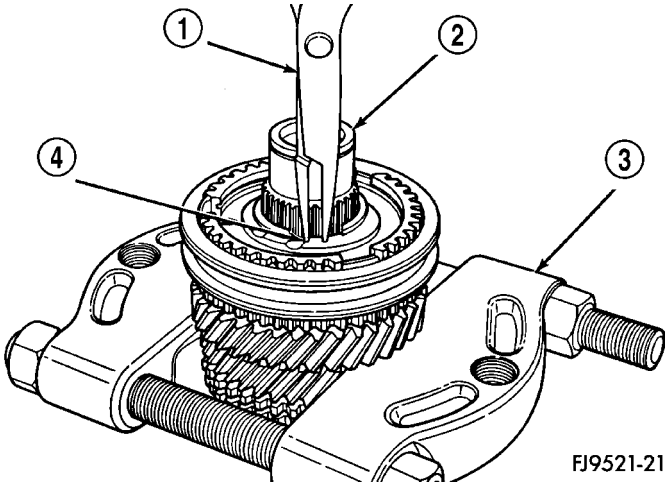

Fig. 89 5th Synchro and Hub Snap Ring Removal

1 - SNAP RING PLIERS
2 - INPUT SHAFT
3 - BEARING SPLITTER
4 - SNAP RING

INPUT SHAFT (Continued)

(2) Remove synchronizer and gear using shop press (Fig. 90).

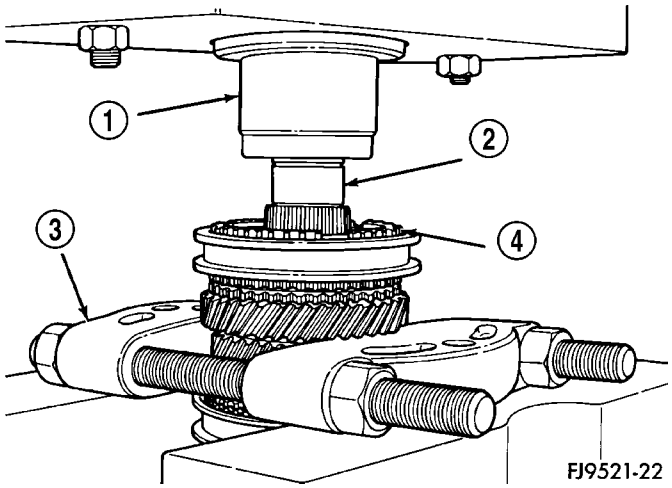

Fig. 90 Remove Synchronizer Using Shop Press

1 - PRESS RAM
2 - INPUT SHAFT
3 - BEARING SPLITTER
4 - SYNCHRONIZER ASSEMBLY

(3) Remove caged needle bearing (Fig. 91).

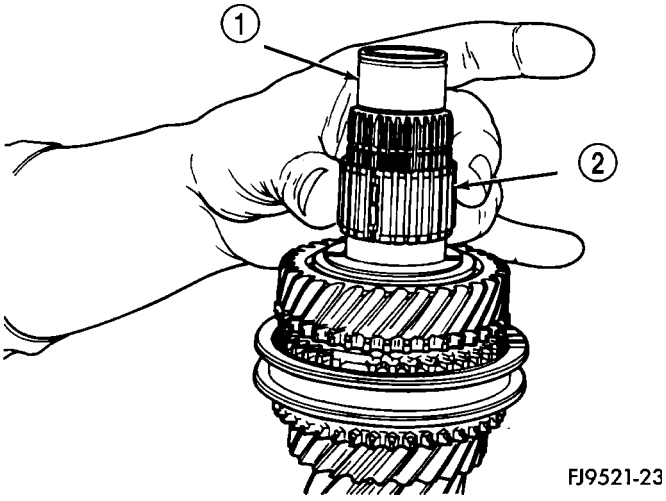

Fig. 91 Caged Needle Bearing Removal

1 - INPUT SHAFT
2 - CAGED NEEDLE BEARING

(4) Remove 4-5 gears split thrust washer ring (Fig. 92).

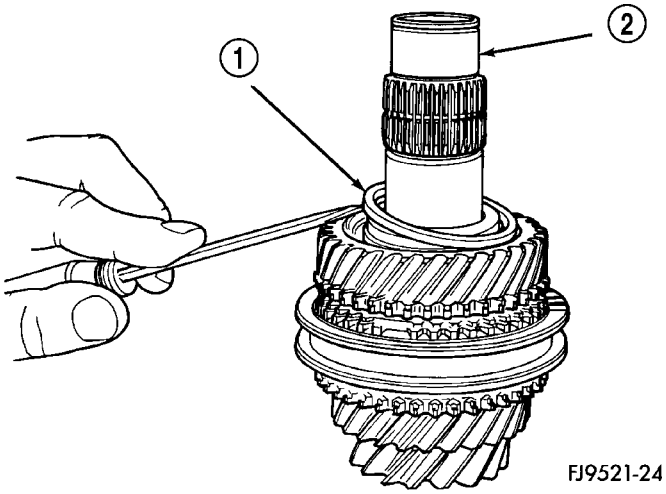

Fig. 92 Split Thrust Washer Ring

1 - SPLIT THRUST WASHER RING
2 - INPUT SHAFT

(5) Remove split thrust washer (Fig. 93).

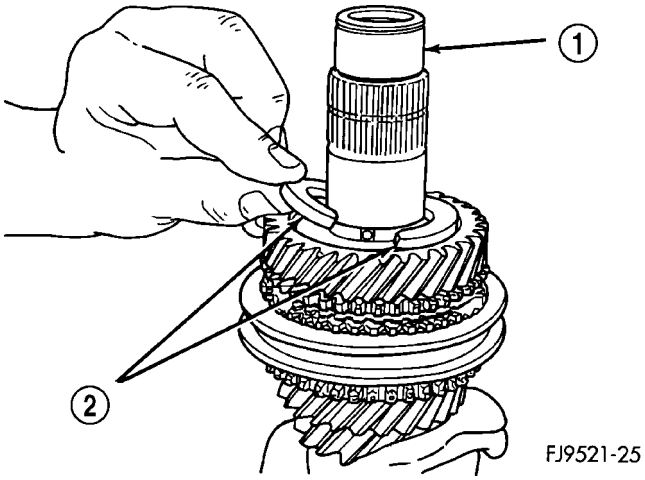

Fig. 93 Split Thrust Washer Removal

1 - INPUT SHAFT
2 - SPLIT THRUST WASHER

INPUT SHAFT (Continued)

(6) Remove split thrust washer separation pin (Fig. 94).

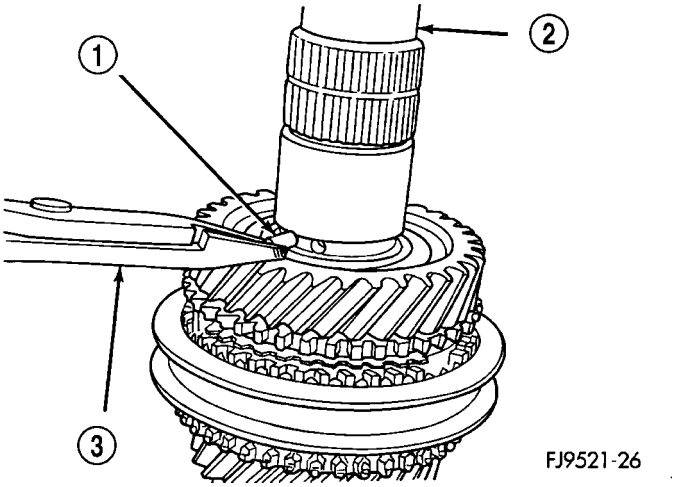

Fig. 94 Split Thrust Washer Separation Pin

1 - SEPARATION PIN
2 - INPUT SHAFT
3 - PLIERS

(7) Remove 4th gear (Fig. 95).

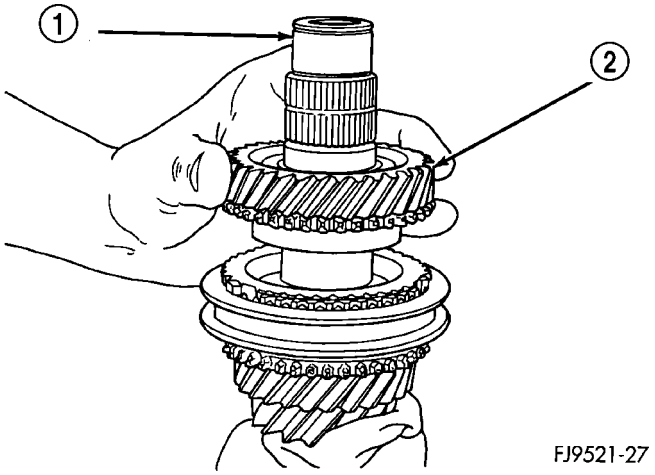

Fig. 95 4th Gear Removal

1 - INPUT SHAFT
2 - 4TH GEAR

(8) Remove 4th gear caged needle bearing (Fig. 96). Check the caged needle bearing for a broken retention spring.

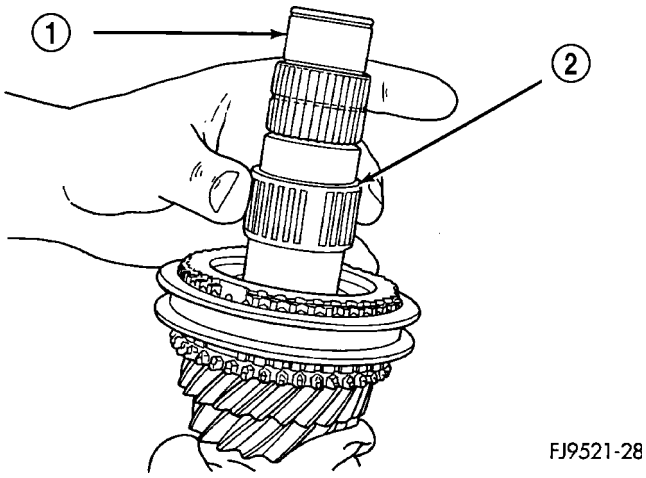

Fig. 96 Caged Needle Bearing Removal

1 - INPUT SHAFT
2 - CAGED NEEDLE BEARING

(9) Remove blocking ring. Remove 3-4 synchronizer hub retaining snap ring (Fig. 97).

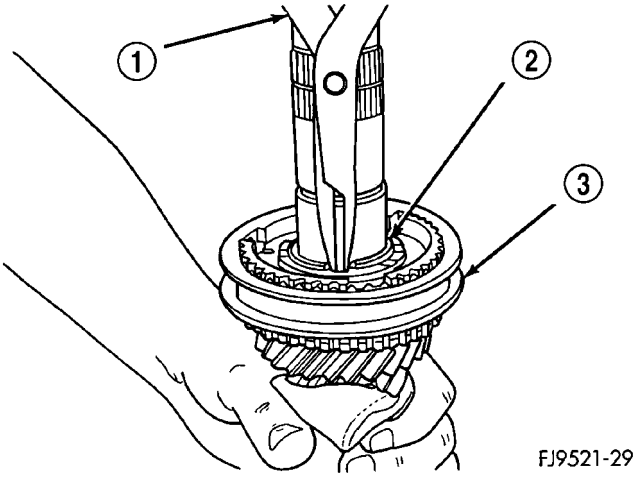

Fig. 97 3-4 Synchronizer Hub Snap Ring

1 - SNAP RING PLIERS
2 - SYNCHRO SNAP RING
3 - SYNCHRONIZER ASSEMBLY

INPUT SHAFT (Continued)

(10) Install input shaft in shop press. Using bearing splitter, remove 3-4 synchronizer and 3rd gear (Fig. 98).

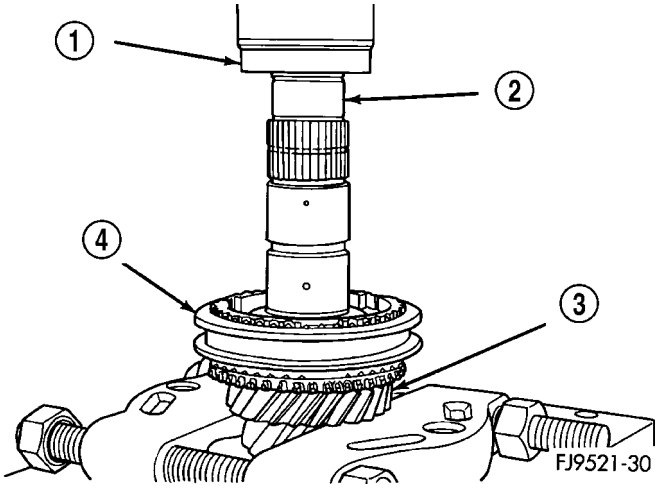

Fig. 98 3rd Gear Removal

1 - PRESS RAM
2 - INPUT SHAFT
3 - 3RD GEAR
4 - SYNCHRONIZER ASSEMBLY

(11) Remove 3rd gear caged needle bearing (Fig. 99). Inspect needle bearing for a broken retention spring

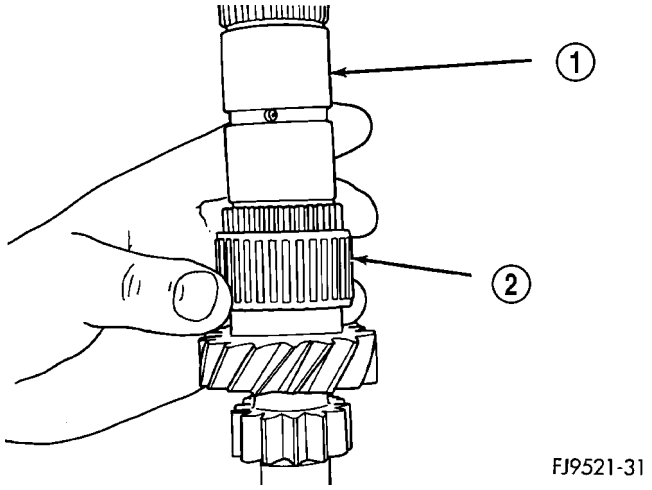

Fig. 99 3rd Gear Caged Needle Bearing

1 - INPUT SHAFT
2 - 3RD GEAR CAGED NEEDLE BEARING

(12) Inspect the input shaft for worn or damaged bearing races or chipped gear teeth. Replace as necessary.

ASSEMBLY

The snap rings that are used on the input shaft are available in select fit sizes. Use the thickest snap ring that fits in each snap ring groove.

(1) Place input shaft into shop press.

(2) Install 3rd gear caged needle bearing (Fig. 100).

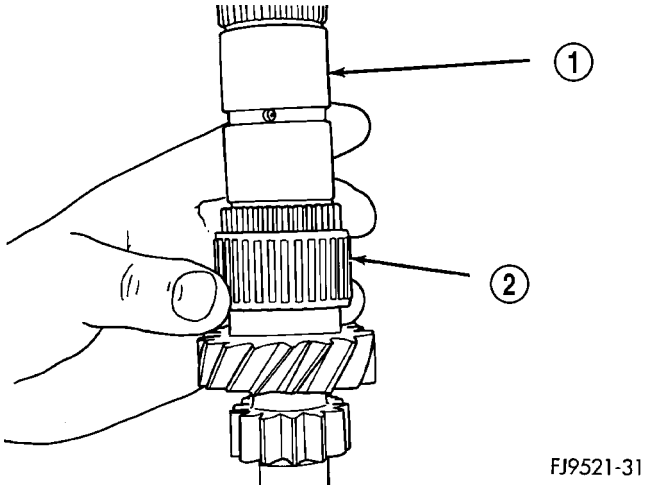

Fig. 100 3rd Gear Caged Needle Bearing

1 - INPUT SHAFT
2 - 3RD GEAR CAGED NEEDLE BEARING

(3) Install 3rd gear and 3-4 synchronizer onto input shaft. Install Tool #C-3717 over input shaft and press on synchronizer hub and 3rd gear (Fig. 101). The synchronizer hub has the letter **U** stamped on the top face of the hub. This designates that the hub must be installed with the **U** facing upward.

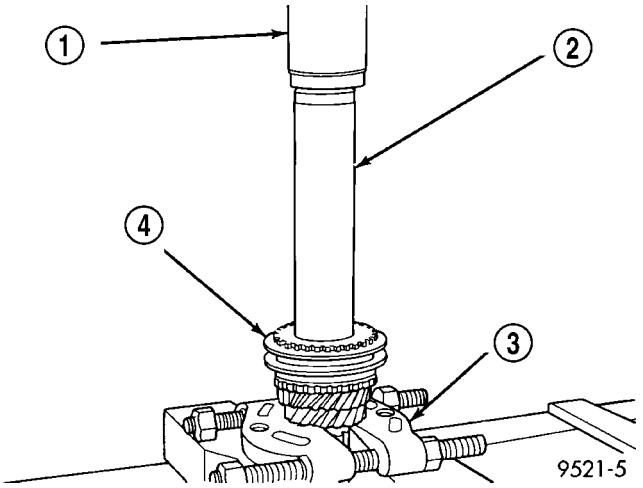

Fig. 101 Press On 3rd Gear Synchronizer Hub

1 - PRESS RAM
2 - SPECIAL TOOL C-3717
3 - BEARING SPLITTER
4 - 3RD GEAR SYNCHRONIZER ASSEMBLY

(4) Install 3-4 synchronizer snap ring into slot on input shaft.

(5) Install blocking ring into 3-4 synchronizer. Install 4th gear caged needle bearing.

(6) Install 4th gear onto input shaft.

INPUT SHAFT (Continued)

(7) Install 4-5 split thrust washer separation pin (Fig. 102).

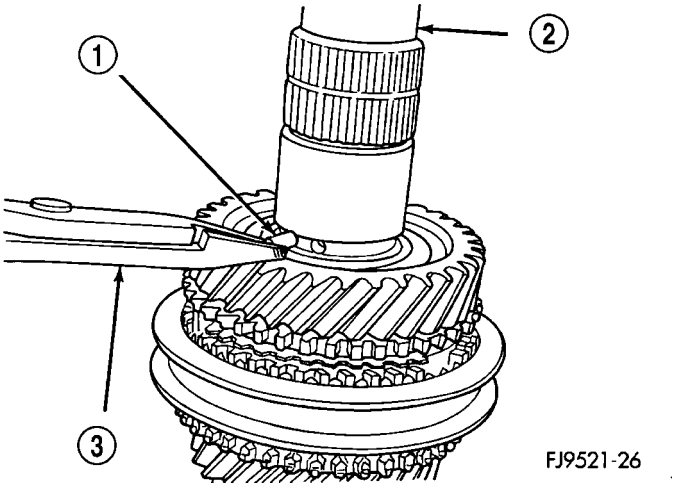

Fig. 102 Split Thrust Washer Separation Pin

1 - SEPARATION PIN
2 - INPUT SHAFT
3 - PLIERS

(8) Install split thrust washer onto input shaft (Fig. 103).

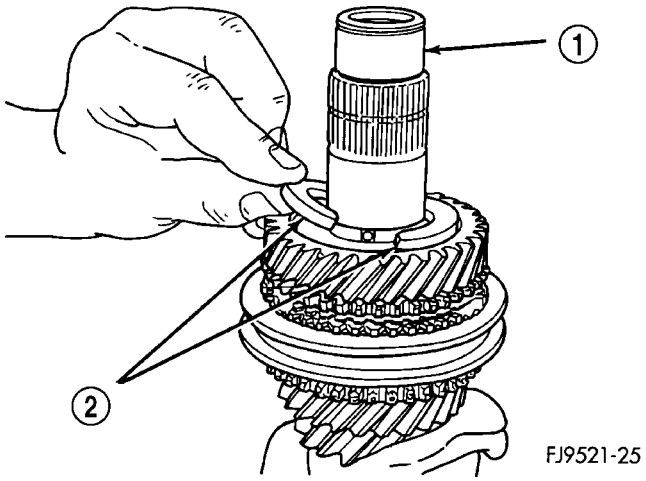

Fig. 103 Split Thrust Washer Installation

1 - INPUT SHAFT
2 - SPLIT THRUST WASHER

(9) Install split thrust washer retaining ring (Fig. 104).

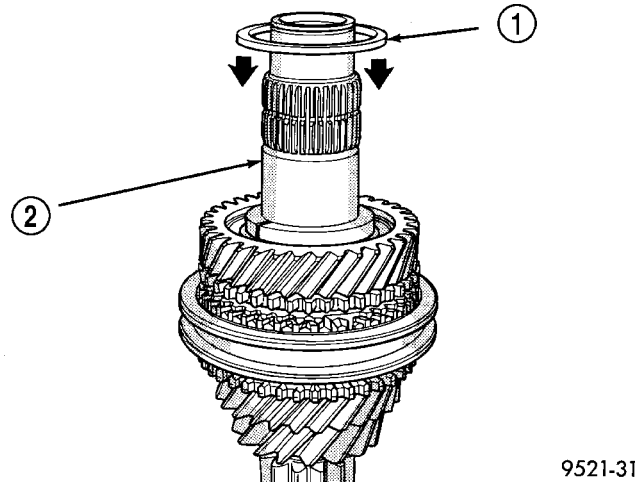

Fig. 104 Retaining Ring Installation

1 - SPLIT THRUST WASHER RING
2 - INPUT SHAFT

(10) Install 5th gear caged needle bearing (Fig. 105).

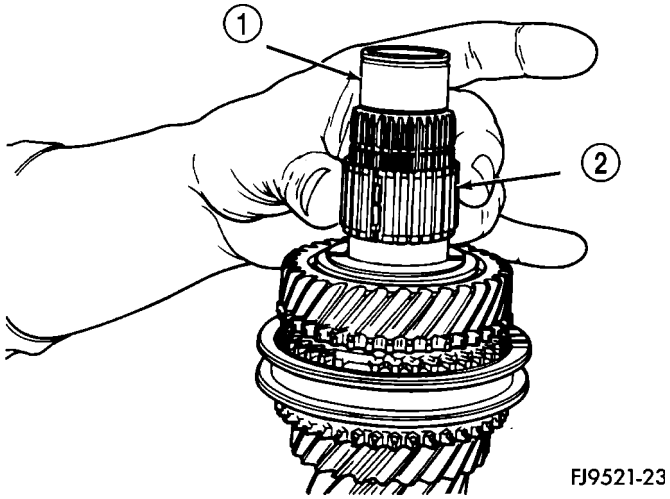

Fig. 105 Caged Needle Bearing Installation

1 - INPUT SHAFT
2 - CAGED NEEDLE BEARING

INPUT SHAFT (Continued)

(11) Using special tool #C-3717, install 5th speed gear and synchronizer (Fig. 106). The 5th gear synchronizer hub has the letter **S** stamped on the top face of the hub. This designates that the hub must be installed with the **S** facing upward.

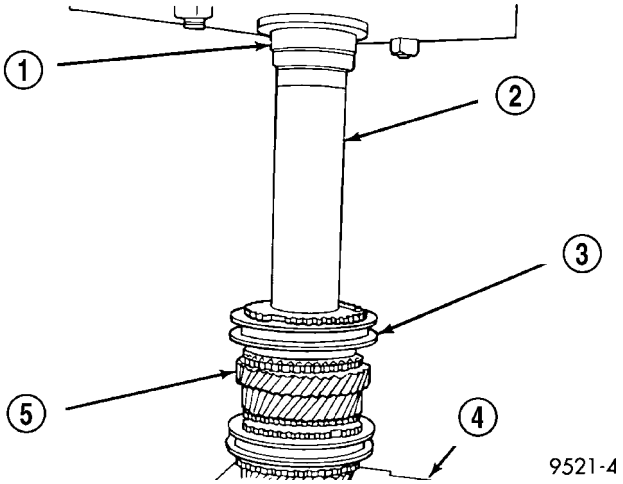

Fig. 106 5th Speed Gear Installation

1 - PRESS RAM
2 - SPECIAL TOOL C-3717
3 - SYNCHRONIZER ASSEMBLY
4 - BEARING SPLITTER
5 - 5TH SPEED GEAR

(12) Install 5th gear synchronizer snap ring (Fig. 107).

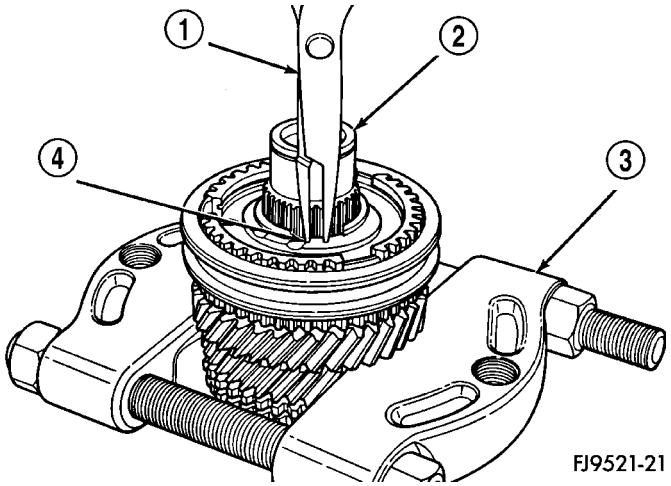

Fig. 107 5th Gear Synchronizer Snap Ring Installation

1 - SNAP RING PLIERS
2 - INPUT SHAFT
3 - BEARING SPLITTER
4 - SNAP RING

OUTPUT BEARING AND RACE

REMOVAL

CAUTION: The position of the output shaft bearing is critical. The bearing is not identical end-to-end. Install bearing with larger diameter cage ring facing out.

(1) Remove caged roller bearing from output bearing race (Fig. 108).

(2) Remove screws at output bearing retainer strap (Fig. 109).

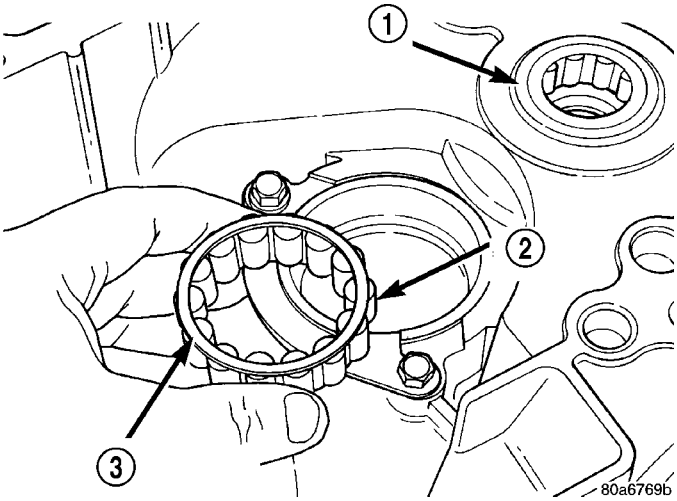

Fig. 108 Output Roller Bearing

1 - INPUT BEARING
2 - OUTPUT BEARING
3 - LARGER DIAMETER CAGE RING

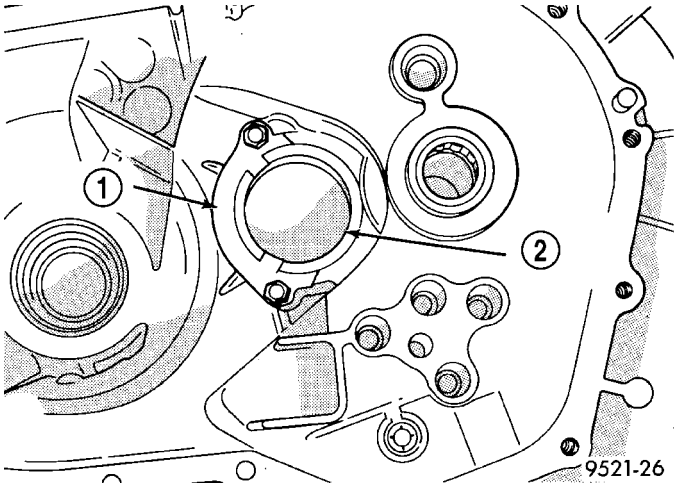

Fig. 109 Output Bearing Strap

1 - BEARING RETAINER
2 - OUTPUT BEARING RACE

OUTPUT BEARING AND RACE (Continued)

(3) Install tool #6787 and slide hammer (Fig. 110). Tighten tool to output bearing race.

(4) Using slide hammer, remove output bearing race.

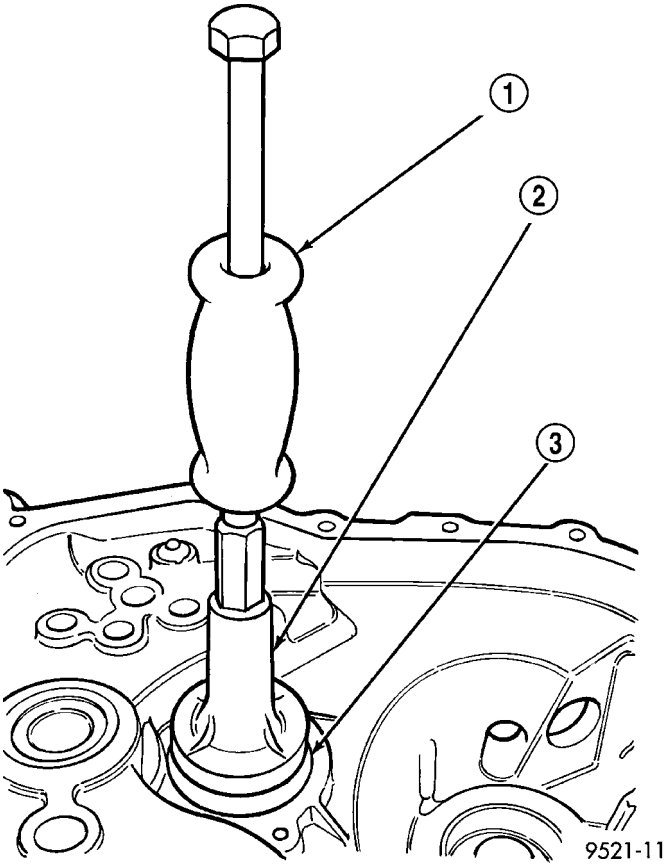

Fig. 110 Output Bearing Race Removal

1 - C-3752
2 - SPECIAL TOOL 6787
3 - OUTPUT SHAFT BEARING RACE

INSTALLATION

(1) Line up output bearing race to race bore.

(2) Insert tool #4628 with C-4171 into output bearing race (Fig. 111). Tap race into bore. Install output bearing into race. Verify that the larger diameter cage is facing outward. Position bearing retaining strap. Tighten bolts to 11 N·m (96 in. lbs.).

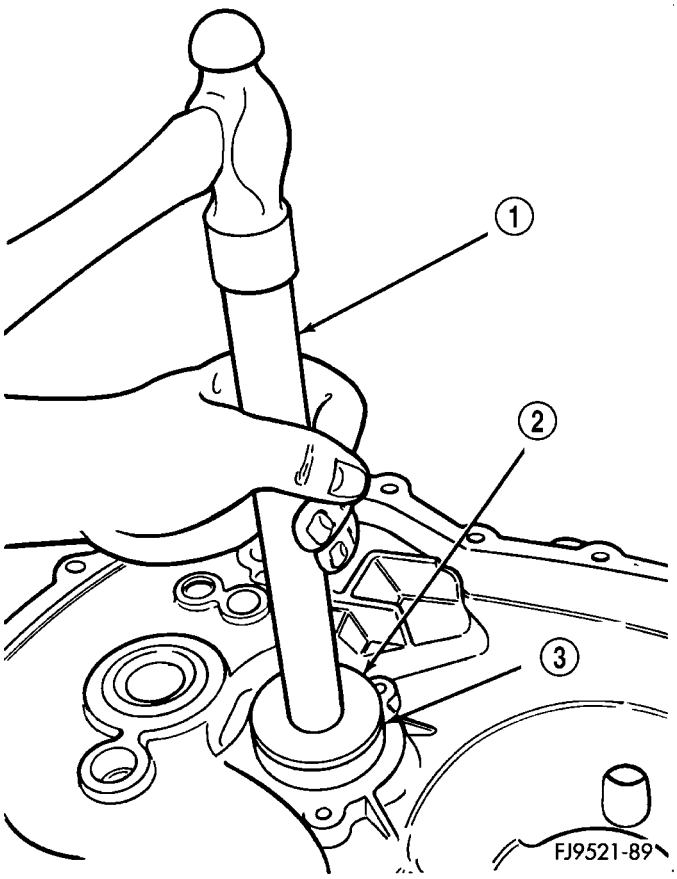

Fig. 111 Output Bearing Race Installation

1 - TOOL C-4171
2 - TOOL C-4628
3 - OUTPUT BEARING RACE

OUTPUT SHAFT

DISASSEMBLY

CAUTION: The output shaft is serviced as an assembly. Do not try to repair any component on the output shaft. If the 1-2 synchronizer or gear fails, it is necessary to replace the output shaft assembly.

It is necessary to check the synchronizer stop ring gap. Use a feeler gauge to measure the gaps between the stop rings and the speed gears. The correct gaps are listed below:

- 1st—0.522-2.208 mm (0.021-0.087 in)
- 2nd—0.522-2.208 mm (0.021-0.087 in)
- 3rd—0.73-1.53 mm (0.029-0.060 in)
- 4th—0.77-1.57 mm (0.030-0.062 in)
- 5th—0.73-1.53 mm (0.029-0.060 in)

If a stop ring gap does not fall within the specifications it must be inspected for wear and replaced. If the 1st or 2nd synchronizer stop ring is worn beyond specifications, the complete output shaft assembly must be replaced.

The output shaft incorporates the 1st and 2nd gears and synchronizers on the assembly (Fig. 112).

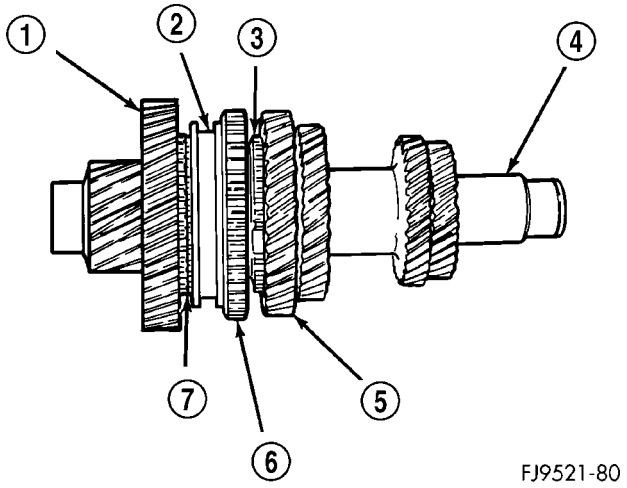

Fig. 112 Output Shaft

1 - 1ST GEAR
2 - SLEEVE
3 - STOP RING
4 - OUTPUT SHAFT
5 - 2ND SPEED GEAR
6 - REVERSE GEAR
7 - STOP RING

REAR BEARING OIL FEED TROUGH

REMOVAL

The bearing oil feed trough is retained in the case by a pin that is molded into the case and clips that are part of the trough (Fig. 113).

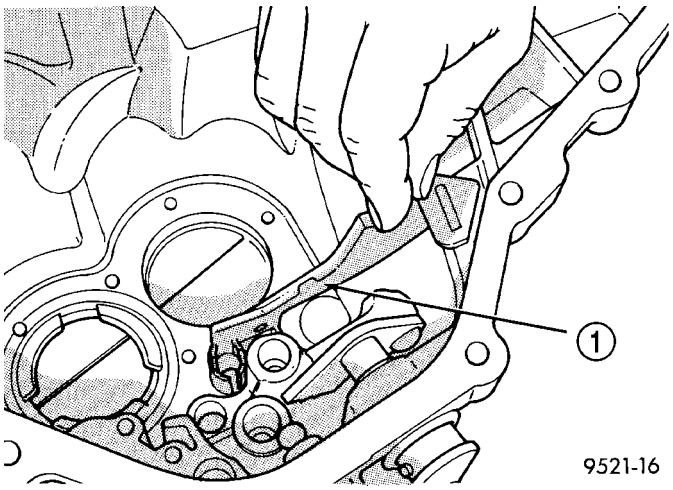

Fig. 113 Oil Feed Trough

1 - OIL FEED TROUGH

(1) Using light plier pressure, squeeze the clips together at the rear of the trough.

(2) Slide the trough over the retaining pin that locates the trough in the case.

INSTALLATION

(1) To install oil feed trough, reverse removal procedure.

SHIFT CROSSOVER SHAFT

REMOVAL

(1) Disassemble transaxle.

(2) With the transaxle disassembled, remove the crossover shaft seal.

(3) Using snap–ring pliers, remove the snap ring at the crossover shaft bore (Fig. 114).

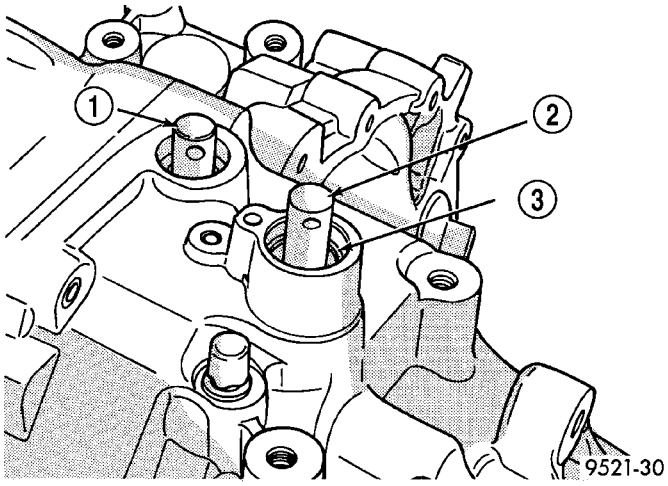

Fig. 114 Crossover Shaft Snap Ring

1 - SELECTOR SHAFT
2 - CROSSOVER SHAFT
3 - SNAP RING

SHIFT CROSSOVER SHAFT (Continued)

(4) Push the crossover shaft in the case and remove the crossover assembly.

INSTALLATION

(1) Install crossover shaft to case and install snap ring (Fig. 114).
(2) Install the crossover shaft seal.
(3) Assemble transaxle.

SHIFT RAIL BUSHINGS

REMOVAL

(1) Thread tool #6786 into shift rail bushing.
(2) Install slide hammer #3752 onto tool.
(3) Remove bushing using slide hammer and tool assembly (Fig. 115).

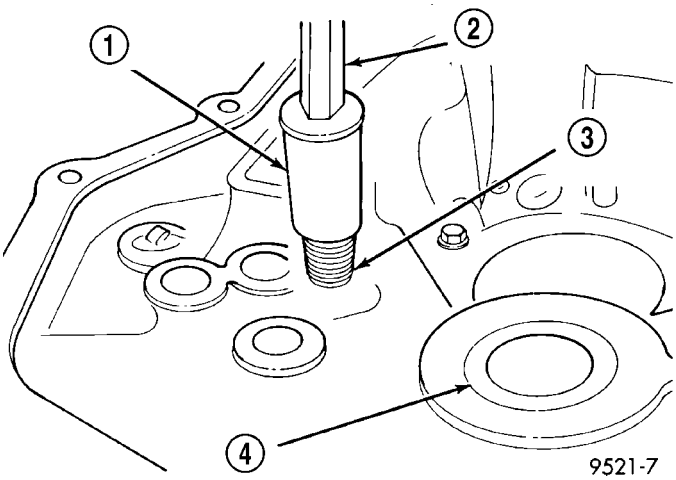

Fig. 115 Shift Rail Bushing Removal

1 - SPECIAL TOOL 6786
2 - SLIDE HAMMER C-3752
3 - SHIFTER RAIL BUSHING
4 - INPUT BEARING

INSTALLATION

(1) Line up replacement bushing in bore.
(2) Using tool #MD998343, tap bushing into bore until flush with the chamfer in the case.

SHIFT SELECTOR SHAFT

REMOVAL

(1) Disassemble transaxle.
(2) With the transaxle disassembled, remove the selector shaft by pushing on the shaft from the outside. Pull shaft out from the inside.

INSTALLATION

(1) Pull selector shaft into position from the outside.
(2) Assemble transaxle.

SHIFT SELECTOR SHAFT BUSHING

REMOVAL

(1) Remove selector shaft using procedure in this group.
(2) Thread tool #6786 into bushing.
(3) Install slide hammer #3752 onto tool and remove bushing using slide hammer (Fig. 116).

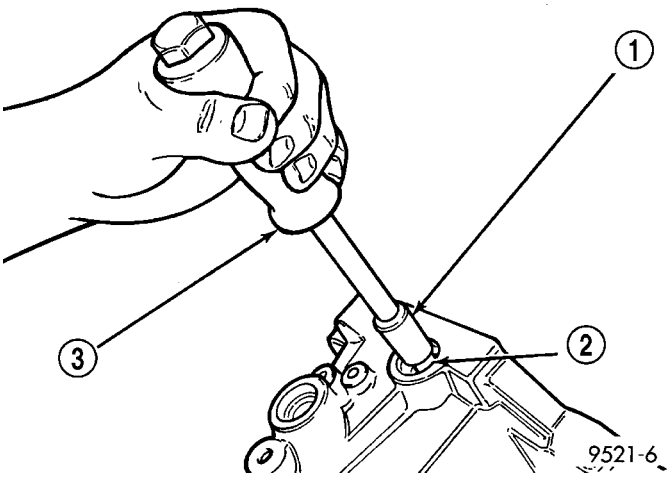

Fig. 116 Selector Shaft Bushing Removal

1 - SPECIAL TOOL 6786
2 - SHIFT SHAFT BUSHING
3 - SLIDE HAMMER C-3752

INSTALLATION

(1) Position replacement bushing over selector shaft bore.
(2) Using an appropriate size deep–well socket, install bushing in selector shaft bore (Fig. 117).

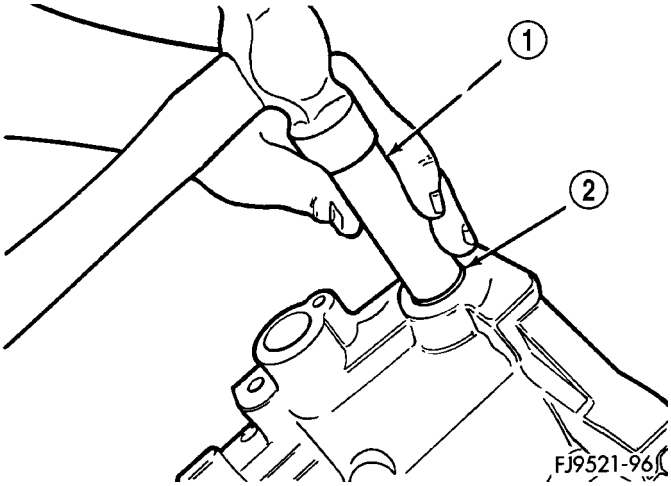

Fig. 117 Selector Shaft Bushing Installation

1 - DEEP WELL SOCKET
2 - SHIFTER SHAFT BUSHING

SHIFT SHAFT SEALS

REMOVAL

It is not necessary to remove the shift shafts from the transaxle to service the shift shaft seals.

(1) Using a pick tool, pry up on the shift shaft seal, and remove seal from bore.

INSTALLATION

(1) Position new shift shaft seal into bore.

(2) Install shift shaft seal into bore using an appropriate size deep-well socket.

SYNCHRONIZER

DISASSEMBLY

Place synchronizer in a clean shop towel and wrap. Press on inner hub. Carefully open up shop towel and remove springs, balls, keys, hub, and sleeve.

CLEANING

CLEAN

Do not attempt to clean the blocking rings in solvent. The friction material will become contaminated. Place synchronizer components in a suitable holder and clean with solvent. Air dry.

INSPECTION

INSPECT

Proper inspection of components involve:

- Teeth, for wear, scuffed, nicked, burred, or broken teeth
- Keys, for wear or distortion
- Balls and springs, for distortion, cracks, or wear

If any of these conditions exist in these components, replace as necessary.

ASSEMBLY

(1) Position synchronizer hub onto a suitable holding fixture (input shaft). The synchronizer hubs are directional. The hubs must be installed with the **U** facing upward.

(2) Install springs into hub slot (Fig. 118).

(3) Insert key into hub and spring.

(4) Apply petroleum jelly to the hole in the key. Insert balls into each key (Fig. 119).

(5) Slide sleeve over the hub and depress balls as you carefully slip the sleeve into position (Fig. 120).

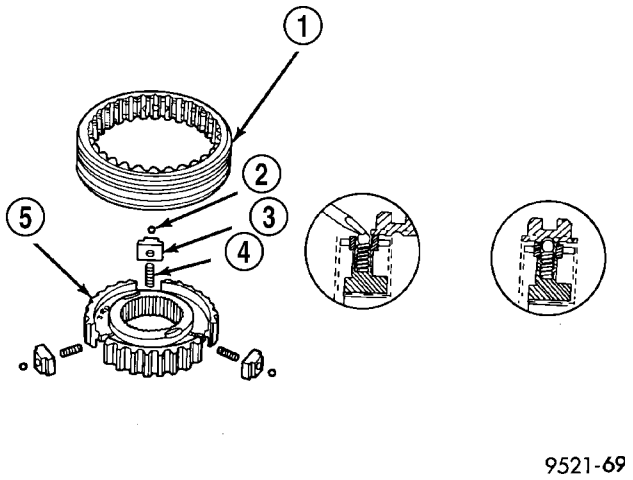

Fig. 118 Synchronizer Assembly

1 - SLEEVE
2 - BALL
3 - KEY
4 - SPRING
5 - HUB

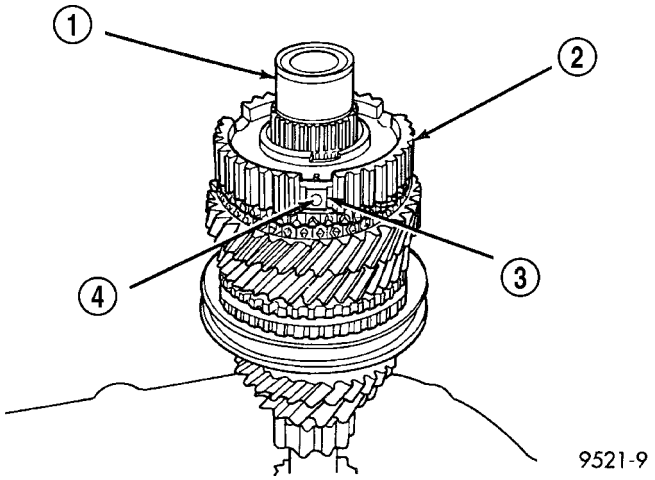

Fig. 119 Synchronizer Balls

1 - INPUT SHAFT
2 - HUB
3 - KEY
4 - BALL

SYNCHRONIZER (Continued)

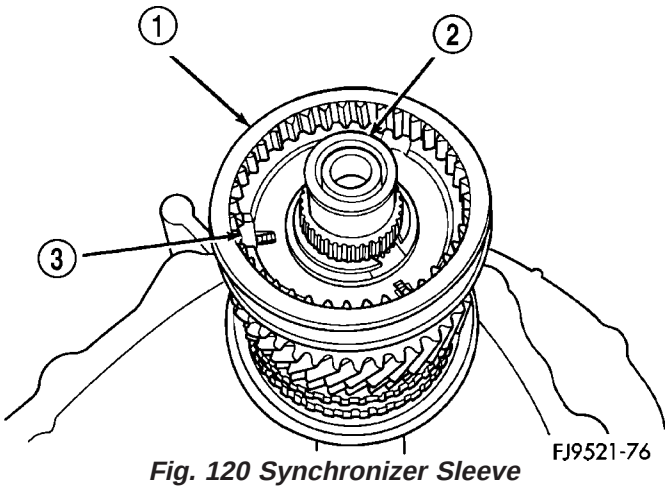

Fig. 120 Synchronizer Sleeve

1 - SLEEVE
2 - INPUT SHAFT
3 - KEY

(6) Line up stop ring tang over the keys in the hub (Fig. 121). Install stop rings. Center the keys and balls by pushing on both stop rings.

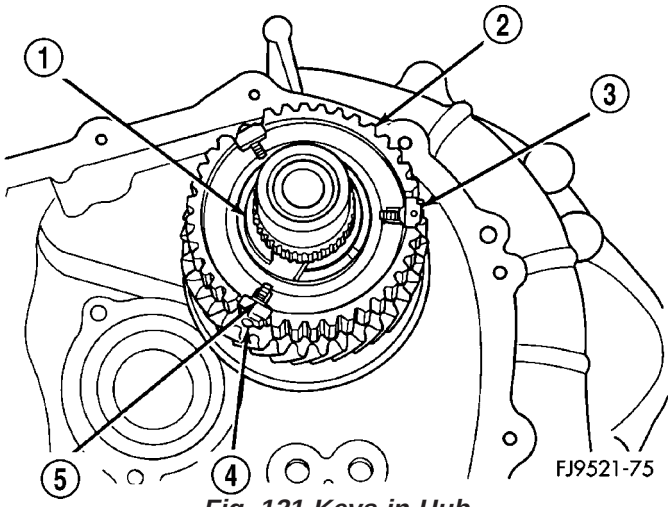

Fig. 121 Keys in Hub

1 - SNAP RING
2 - CLUTCH
3 - KEY
4 - BALL
5 - SPRING

VEHICLE SPEED SENSOR

DESCRIPTION

VEHICLE SPEED SENSOR

The Vehicle Speed Sensor (VSS) is a pulse generator mounted to an adapter near the transmission output shaft. The sensor is driven through the adapter by a speedometer pinion gear. The VSS pulse signal to the speedometer/odometer is monitored by the PCM speed control circuitry to determine vehicle speed and to maintain speed control set speed.

REMOVAL

(1) Raise vehicle on hoist.
(2) Disconnect the speed sensor connector (Fig. 122).

CAUTION: Clean area around speed sensor before removing to prevent dirt from entering the transaxle during speed sensor removal.

(3) Remove speed sensor retaining bolt (Fig. 122).

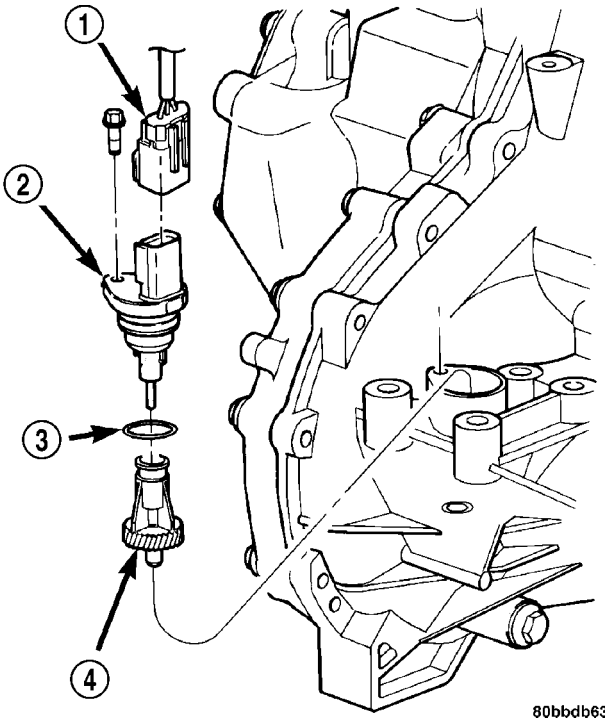

Fig. 122 Speed Sensor and Pinion—Removal/ Installation

1 - CONNECTOR
2 - SENSOR
3 - O-RING
4 - SPEEDO PINION

(4) Remove speed sensor from transaxle.

CAUTION: Carefully remove vehicle speed sensor so that sensor drive gear does not fall into transaxle. Should sensor drive gear fall into the transaxle during sensor removal, drive gear must be reattached to sensor.

(5) Remove speed sensor drive gear from speed sensor.

INSTALLATION

(1) Install pinion gear to speed sensor (Fig. 122).
(2) Using a NEW o-ring, install the speed sensor to the transaxle (Fig. 122).
(3) Install the bolt and torque to 7 N·m (60 in. lbs.).
(4) Connect speed sensor connector (Fig. 122).
(5) Lower vehicle and road test to verify proper speedometer operation.

T850 MANUAL TRANSAXLE

TABLE OF CONTENTS

page

T850 MANUAL TRANSAXLE
DESCRIPTION 43
OPERATION 45
DIAGNOSIS AND TESTING - COMMON PROBLEM CAUSES 52
REMOVAL 52
DISASSEMBLY 53
ASSEMBLY 58
INSTALLATION 66
SPECIFICATIONS - T850 MANUAL TRANSAXLE 67
SPECIAL TOOLS - T850 TRANSAXLE 69
AXLE SEALS
REMOVAL 72
INSTALLATION 72
BACK-UP LAMP SWITCH
REMOVAL 72
INSTALLATION 72
DIFFERENTIAL
DESCRIPTION 73
OPERATION 73
DISASSEMBLY 73
ASSEMBLY 77
ADJUSTMENTS
ADJUSTMENT - DIFFERENTIAL TURNING TORQUE 80
ADJUSTMENT - DIFFERENTIAL SIDE GEAR END PLAY 82
FLUID
STANDARD PROCEDURE
STANDARD PROCEDURE - FLUID LEVEL CHECK 82
STANDARD PROCEDURE - FLUID DRAIN AND FILL 83
GEAR SHIFT CABLE
REMOVAL 83
INSTALLATION 84
GEAR SHIFT MECHANISM
REMOVAL 85
INSTALLATION 85
INPUT SHAFT
DESCRIPTION 86
DISASSEMBLY 86
ASSEMBLY 89
INTERMEDIATE SHAFT
DESCRIPTION 93
DISASSEMBLY 94
ASSEMBLY 100
SHIFT COVER
DESCRIPTION 107
SHIFT FORK AND SHAFT
DESCRIPTION 107
SYNCHRONIZER
DESCRIPTION 108
DISASSEMBLY 108
CLEANING
CLEAN 108
INSPECTION
INSPECT 108
ASSEMBLY 108

T850 MANUAL TRANSAXLE

DESCRIPTION

The NV T850 5-speed transaxle (Fig. 1) is a constant-mesh manual transaxle that is synchronized in all gear ranges, including reverse.

The transaxle consists of three major sub-assemblies: the input shaft, intermediate shaft, and differential assembly. The transaxle shift system consists of a mechanical shift cover, rails, forks, and cables. The unique design of this shift system provides a higher mechanical advantage, resulting in less friction and lower shift cable loads for smoother, more positive operation.

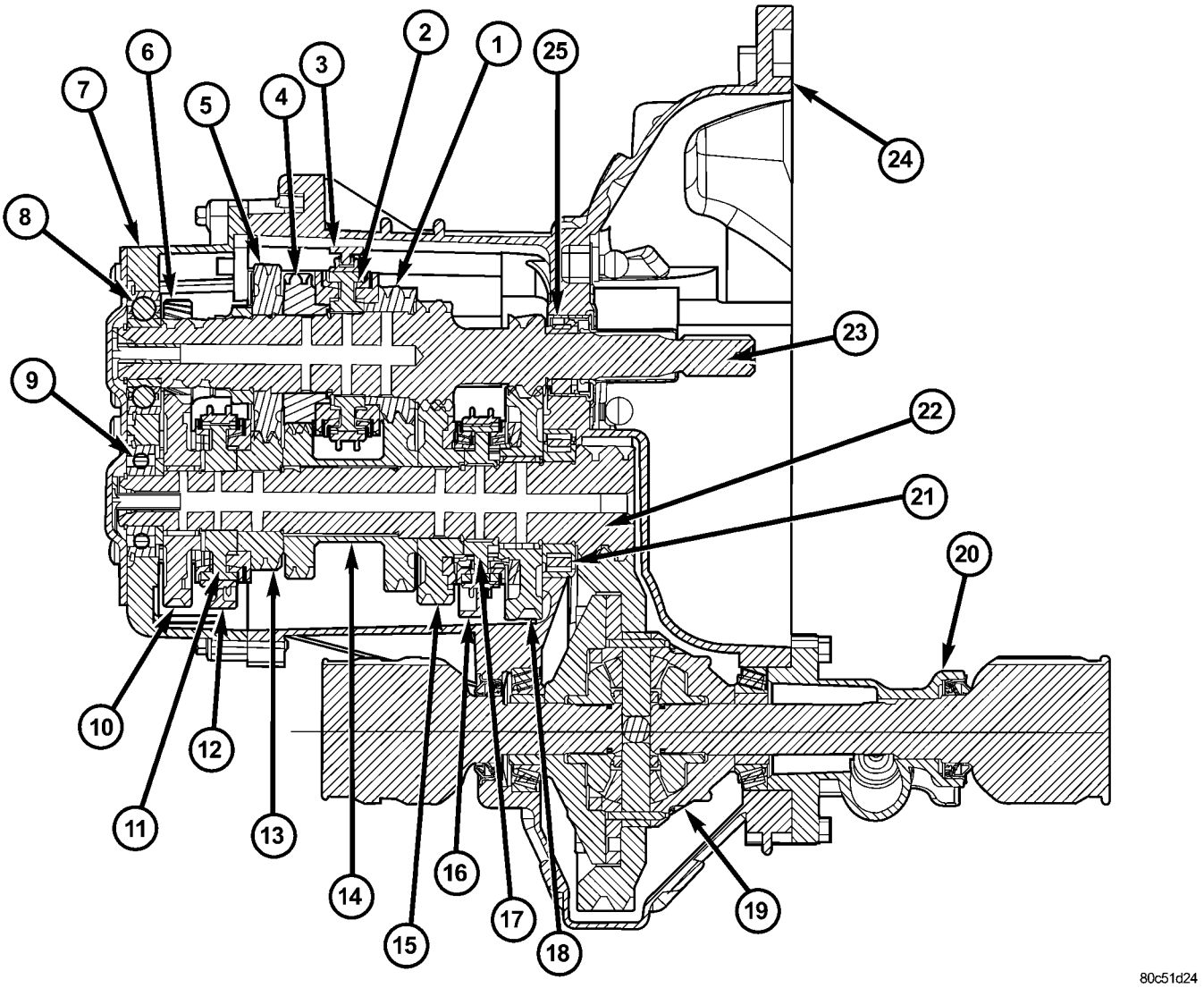

Fig. 1 NV T850 Transaxle

1 - 3RD GEAR (SPEED)
2 - 3/4 SYNCHRONIZER
3 - 3/4 SHIFT FORK
4 - 4TH GEAR (SPEED)
5 - 5TH GEAR (INPUT)
6 - REVERSE IDLER GEAR
7 - END COVER, REAR
8 - INPUT SHAFT BEARING (SEALED BALL)
9 - INTERMEDIATE SHAFT BEARING (SEALED BALL)
10 - REVERSE GEAR
11 - 5/R SYNCHRONIZER
12 - 5/R SHIFT FORK
13 - 5TH GEAR (SPEED)
14 - 3/4 CLUSTER GEAR
15 - 2ND GEAR (SPEED)
16 - 1/2 SHIFT FORK
17 - 1/2 SYNCHRONIZER
18 - 1ST GEAR (SPEED)
19 - DIFFERENTIAL ASSEMBLY
20 - EXTENSION HOUSING
21 - INTERMEDIATE SHAFT BEARING (CAGED ROLLER)
22 - INTERMEDIATE SHAFT
23 - INPUT SHAFT
24 - CASE
25 - INPUT SHAFT BEARING (ROLLER)

T850 MANUAL TRANSAXLE (Continued)

The NV T850 transaxle is available with the 2.7L Gas engine option. Its gear ratios are as follows:

GEAR	RATIO
1st	3.65
2nd	2.05
3rd	1.37
4th	0.97
5th	0.76
Reverse	3.47
Final Drive Ratio	3.77

TRANSAXLE IDENTIFICATION

The transaxle model, assembly part number, build date, and final drive ratio (FDR) can be found on a metal tag fastened to the transaxle case on the bellhousing (Fig. 2). A barcode label is also glued to the transaxle bellhousing, and it too includes the transaxle part number.

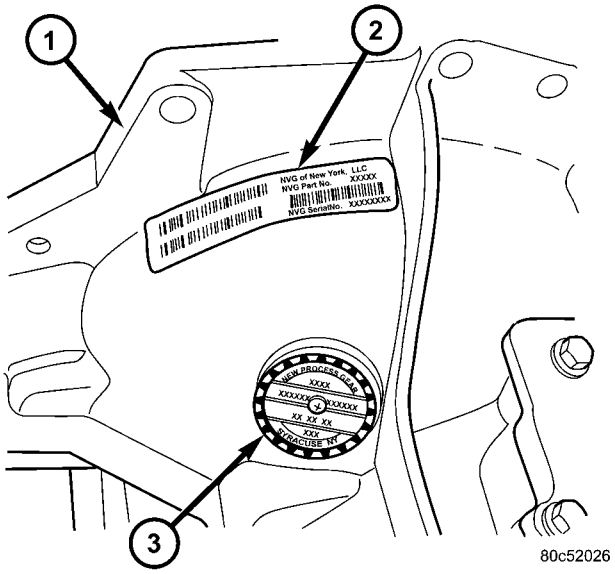

Fig. 2 T850 Transaxle Identification

1 - TRANSAXLE BELLHOUSING
2 - BARCODE LABEL
3 - I.D. TAG

T850 MANUAL TRANSAXLE (Continued)

OPERATION

NEUTRAL

Engine power is transmitted to the input shaft via the clutch assembly and the input shaft turns. Since no synchronizers are engaged on either the input or intermediate shafts, power is not transmitted to the intermediate shaft and the differential does not turn (Fig. 3).

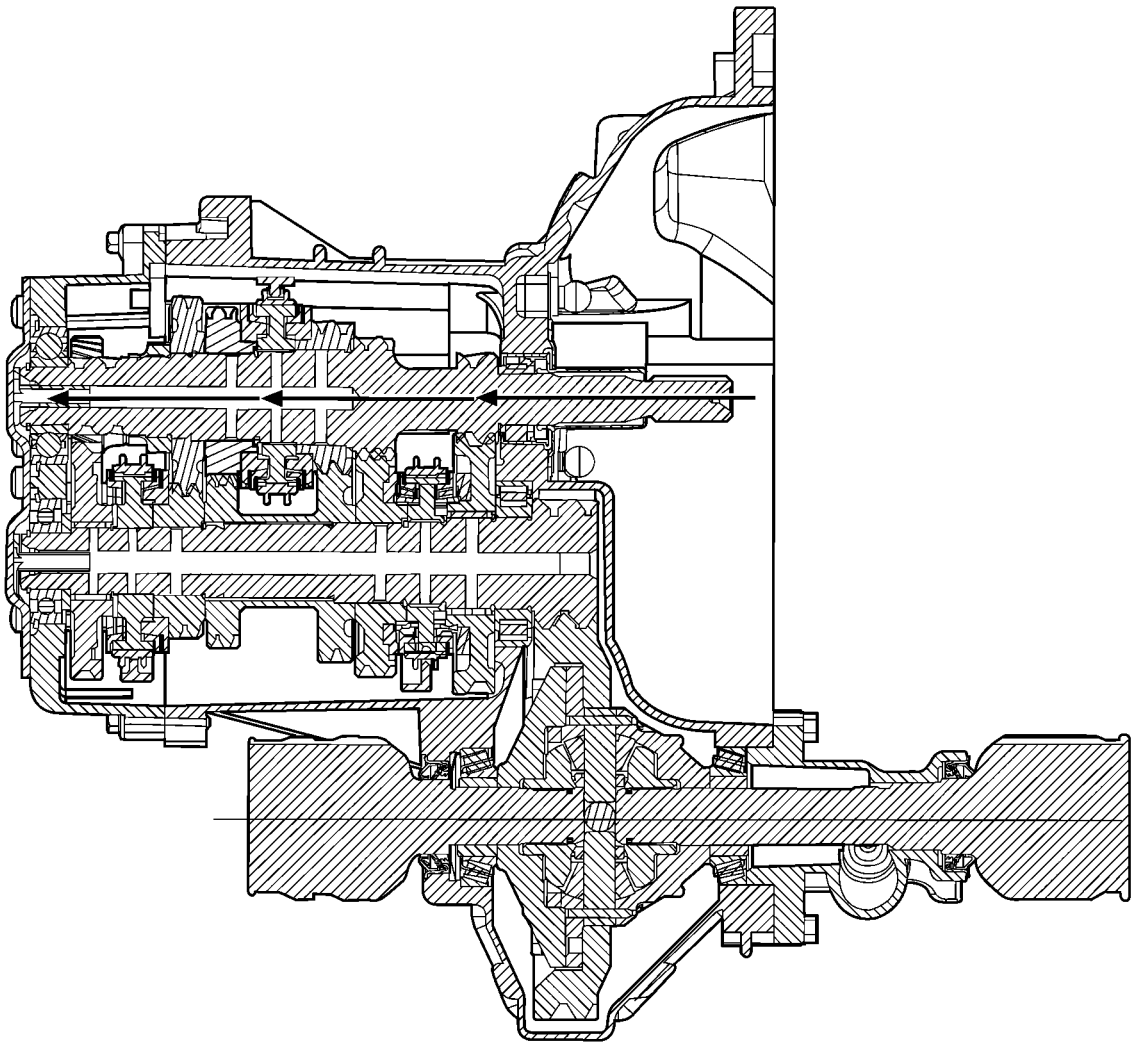

80c52005

Fig. 3 Neutral Gear Operation

T850 MANUAL TRANSAXLE (Continued)

1ST GEAR

Engine power is transmitted to the input shaft via the clutch assembly and the input shaft turns. The input shaft first gear is integral to the input shaft, and is in constant mesh with the intermediate shaft first speed gear. Because of this constant mesh, the intermediate shaft first speed gear freewheels until first gear is selected. As the gearshift lever is moved to the first gear position, the 1-2 fork moves the 1-2 synchronizer sleeve towards first gear on the intermediate shaft. The synchronizer sleeve engages the first gear clutch teeth, fixing the gear to the intermediate shaft, and allowing power to transmit through the intermediate shaft to the differential (Fig. 4).

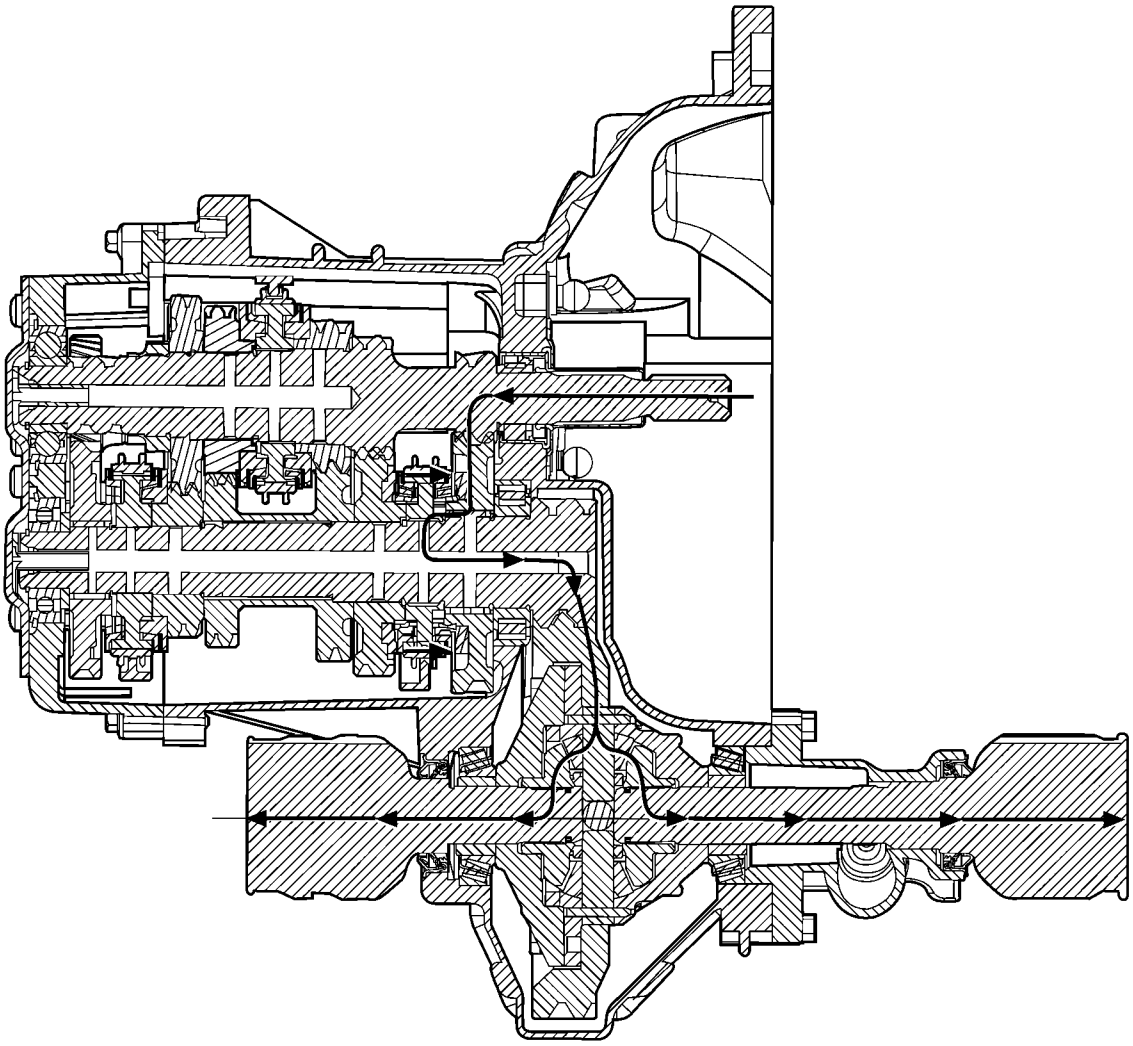

80c51d2f

Fig. 4 1st Gear Operation

T850 MANUAL TRANSAXLE (Continued)

2ND GEAR

Engine power is transmitted to the input shaft via the clutch assembly and the input shaft turns. The input shaft second gear is integral to the input shaft, and is in constant mesh with the intermediate shaft second speed gear. Because of this constant mesh, the intermediate shaft second speed gear freewheels until second gear is selected. As the gearshift lever is moved to the second gear position, the 1-2 fork moves the 1-2 synchronizer sleeve towards second gear on the intermediate shaft. The synchronizer sleeve engages the second gear clutch teeth, fixing the gear to the intermediate shaft, and allowing power to transmit through the intermediate shaft to the differential (Fig. 5).

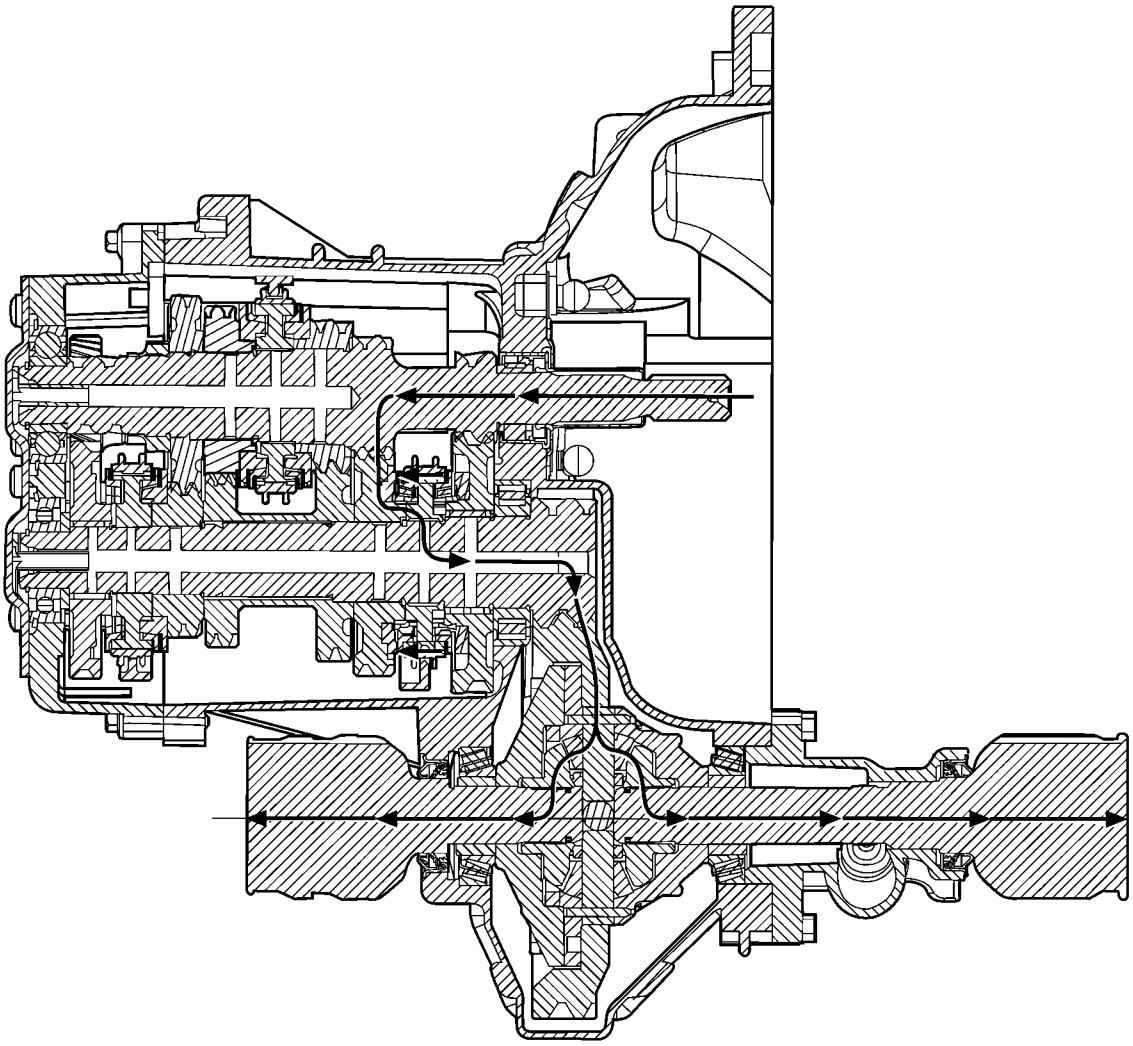

80c51d36

Fig. 5 2nd Gear Operation

T850 MANUAL TRANSAXLE (Continued)

3RD GEAR

Engine power is transmitted to the input shaft via the clutch assembly and the input shaft turns. The input shaft third speed gear is in constant mesh with the intermediate shaft 3-4 cluster gear, which is fixed to the intermediate shaft. Because of this constant mesh, the input shaft third speed gear freewheels until third gear is selected. As the gearshift lever is moved to the third gear position, the 3-4 fork moves the 3-4 synchronizer sleeve towards third gear on the input shaft. The synchronizer sleeve engages the third gear clutch teeth, fixing the gear to the input shaft, and allowing power to transmit through the intermediate shaft to the differential (Fig. 6).

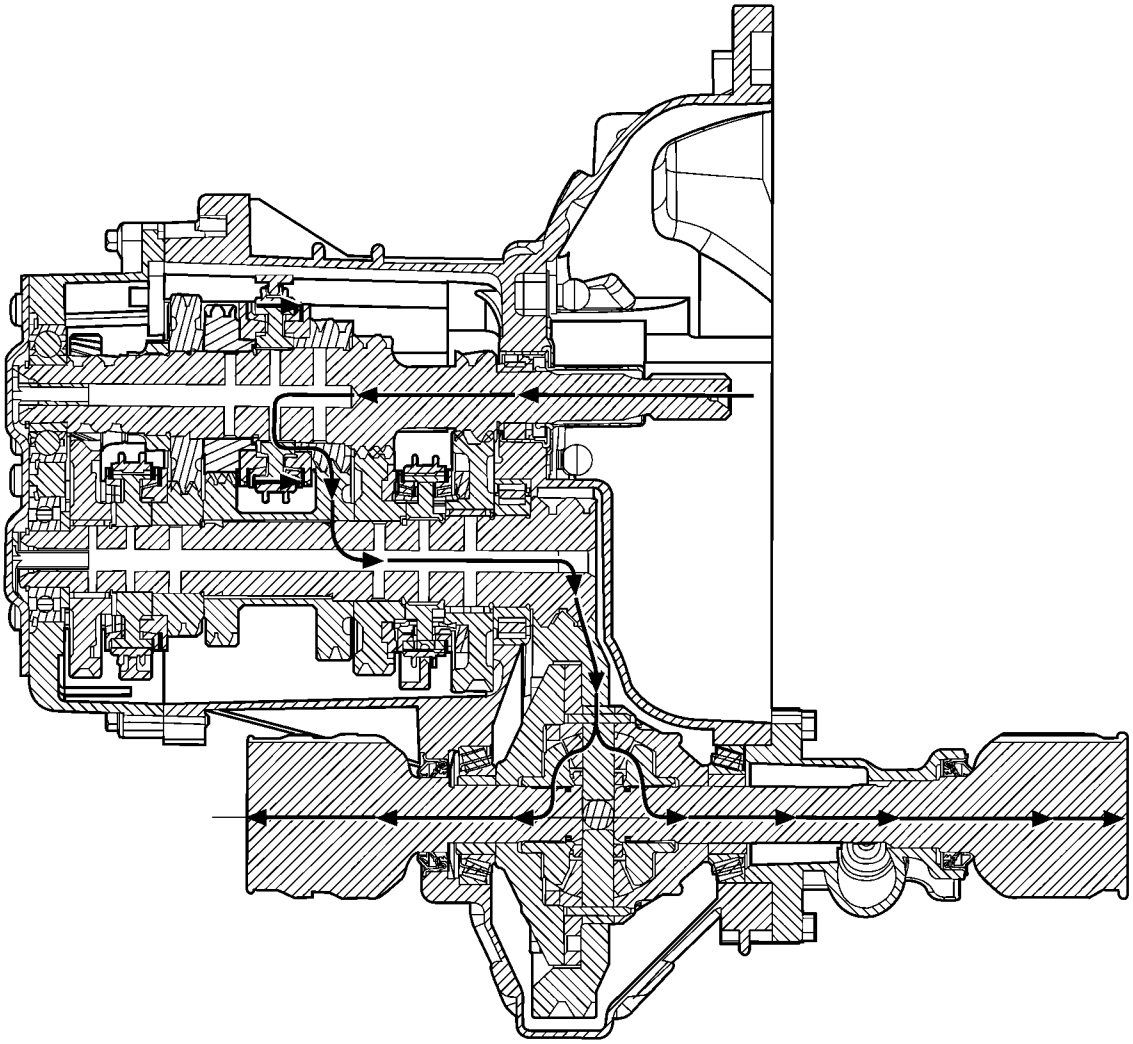

80c51d3a

Fig. 6 3rd Gear Operation

T850 MANUAL TRANSAXLE (Continued)

4TH GEAR

Engine power is transmitted to the input shaft via the clutch assembly and the input shaft turns. The input shaft fourth speed gear is in constant mesh with the intermediate shaft 3-4 cluster gear, which is fixed to the intermediate shaft. Because of this constant mesh, the input shaft fourth speed gear freewheels until fourth gear is selected. As the gearshift lever is moved to the fourth gear position, the 3-4 fork moves the 3-4 synchronizer sleeve towards fourth gear on the input shaft. The synchronizer sleeve engages the fourth gear clutch teeth, fixing the gear to the input shaft, and allowing power to transmit through the intermediate shaft to the differential (Fig. 7).

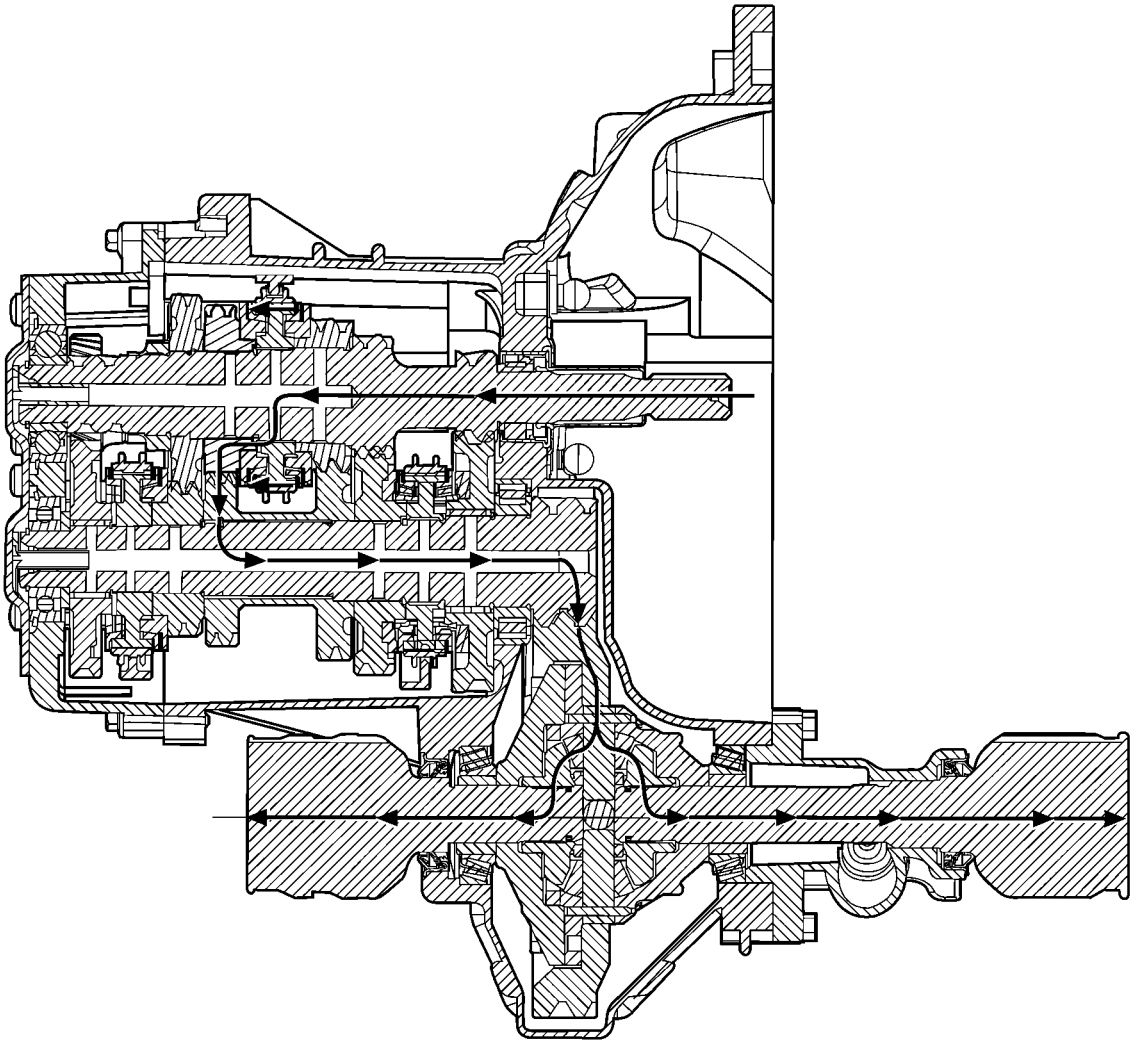

Fig. 7 4th Gear Operation

T850 MANUAL TRANSAXLE (Continued)

5TH GEAR

Engine power is transmitted to the input shaft via the clutch assembly and the input shaft turns. The input shaft fifth gear is pressed on to the input shaft, and is in constant mesh with the intermediate shaft fifth speed gear. Because of this constant mesh, the intermediate shaft fifth speed gear freewheels until fifth gear is selected. As the gearshift lever is moved to the fifth gear position, the 5-R fork moves the 5-R synchronizer sleeve towards the intermediate shaft fifth speed gear. The synchronizer sleeve engages the fifth gear clutch teeth, fixing the gear to the input shaft, and allowing power to transmit through the intermediate shaft to the differential (Fig. 8).

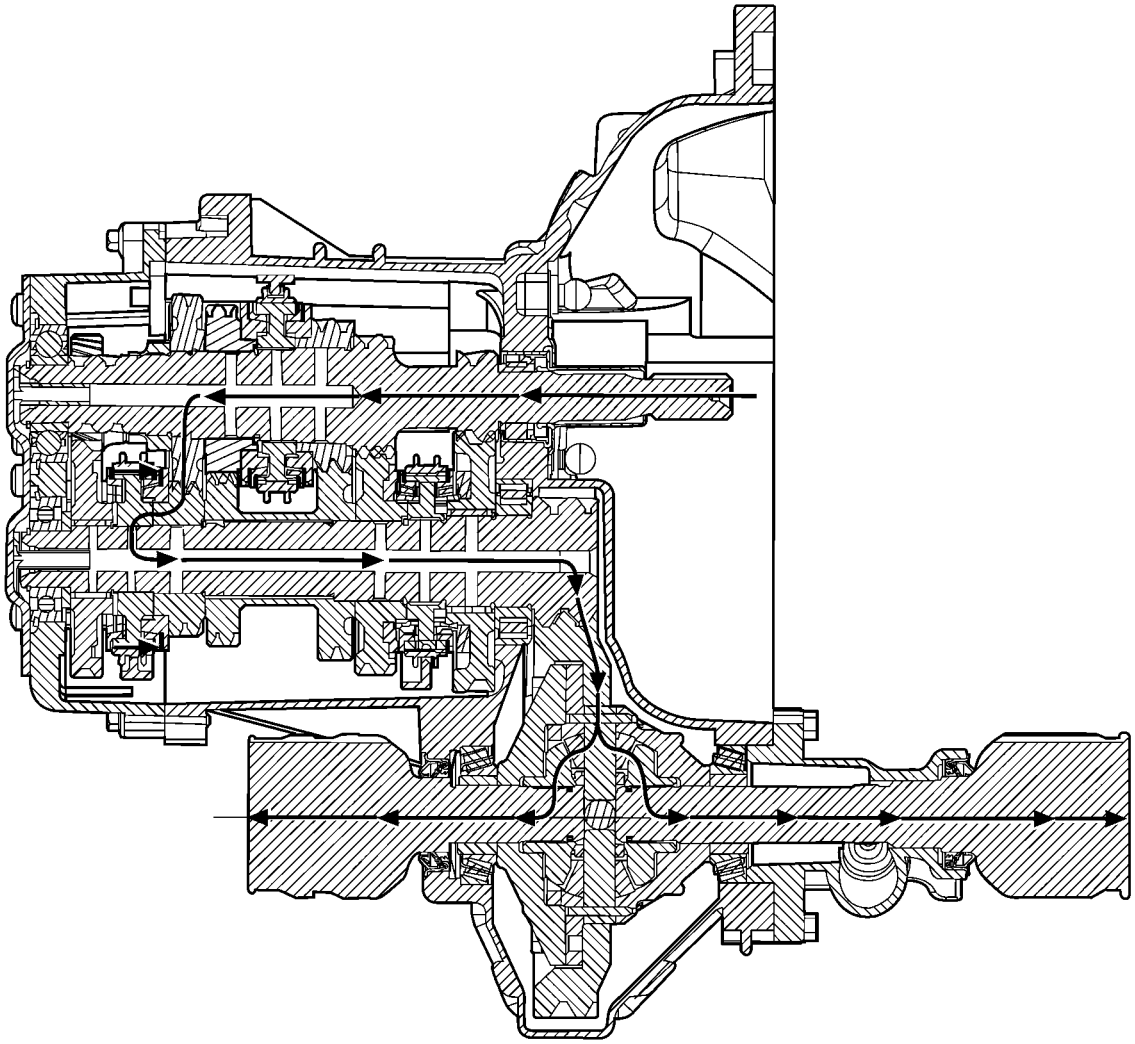

80c51d49

Fig. 8 5th Gear Operation

T850 MANUAL TRANSAXLE (Continued)

REVERSE GEAR

Engine power is transmitted to the input shaft via the clutch assembly and the input shaft turns. The input shaft reverse gear is integral to the input shaft, and is in constant mesh with the reverse idler gear. The reverse idler gear, which reverses the rotation of the intermediate shaft, is in constant mesh with the intermediate shaft reverse gear. Because of this constant mesh, the intermediate shaft reverse gear freewheels until reverse gear is selected. As the gearshift lever is moved to the reverse gear position, the 5-R fork moves the 5-R synchronizer sleeve towards the intermediate shaft reverse gear. The synchronizer sleeve engages the reverse gear clutch teeth, fixing the gear to the intermediate shaft, and allowing power to transmit through the intermediate shaft to the differential (in reverse) (Fig. 9).

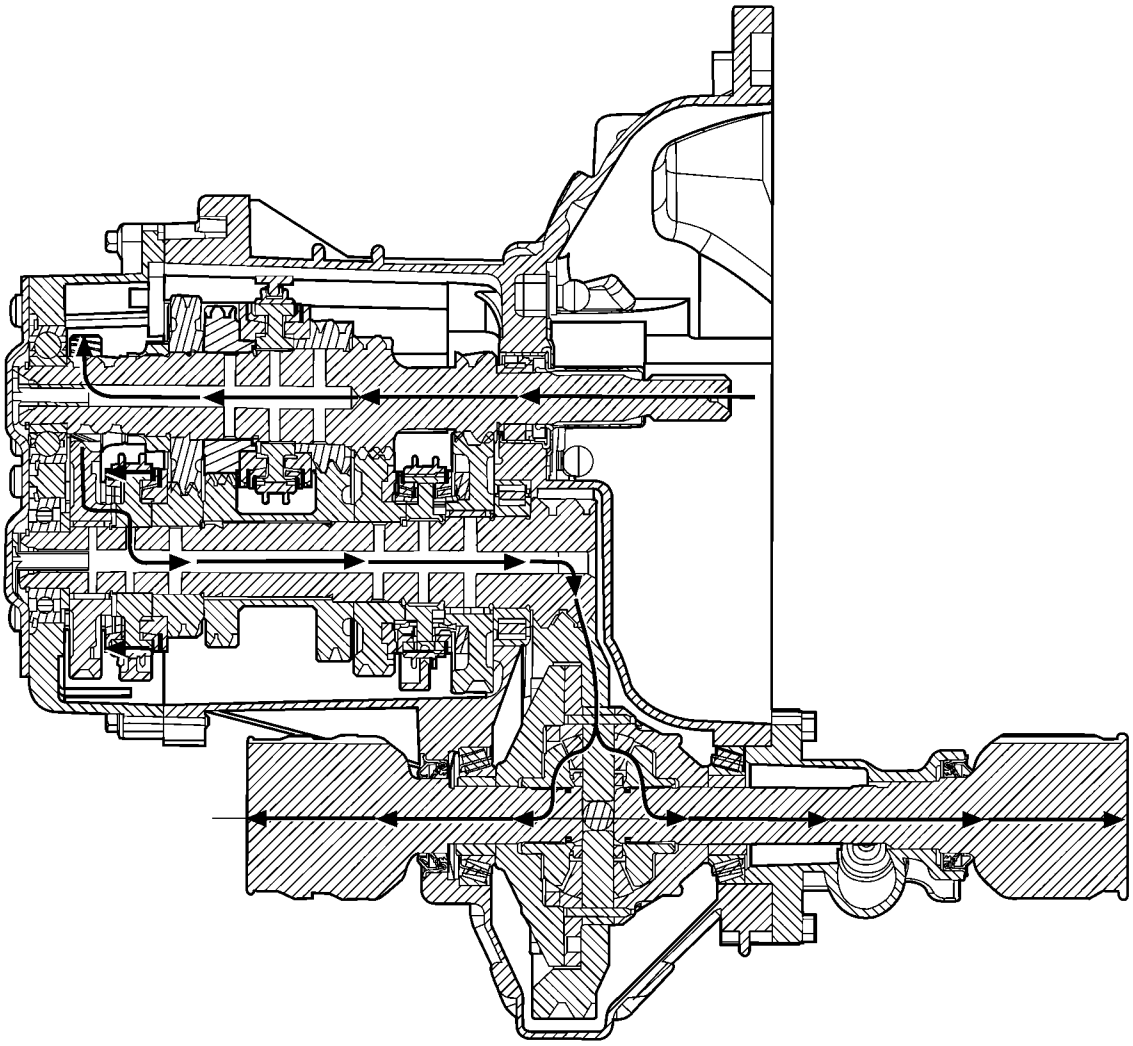

80c51d4d

Fig. 9 Reverse Gear Operation

T850 MANUAL TRANSAXLE (Continued)

DIAGNOSIS AND TESTING - COMMON PROBLEM CAUSES

The majority of transaxle malfunctions are a result of:

- Insufficient lubrication
- Incorrect lubricant
- Misassembled or damaged internal components
- Improper operation

HARD SHIFTING

Hard shifting may be caused by a misadjusted crossover cable. If hard shifting is accompanied by gear clash, synchronizer clutch and stop rings or gear teeth may be worn or damaged.

Hard shifting may also be caused by a binding or broken shift cover mechanism. Remove shift cover and verify smooth operation. Replace as necessary.

Misassembled synchronizer components also cause shifting problems. Incorrectly installed synchronizer sleeves, keys, balls, or springs can cause shift problems.

NOISY OPERATION

Transaxle noise is most often a result of worn or damaged components. Chipped, broken gear or synchronizer teeth, and brinnelled, spalled bearings all cause noise.

Abnormal wear and damage to the internal components is frequently the end result of insufficient lubricant.

SLIPS OUT OF GEAR

Transaxle disengagement may be caused by misaligned or damaged shift components, or worn teeth on the drive gears or synchronizer components. Incorrect assembly also causes gear disengagement. Check for missing snap rings.

LOW LUBRICANT LEVEL

Insufficient transaxle lubricant is usually the result of leaks, or inaccurate fluid level check or refill method. Leakage is evident by the presence of oil around the leak point. If leakage is not evident, the condition is probably the result of an underfill.

If air–powered lubrication equipment is used to fill a transaxle, be sure the equipment is properly calibrated. Equipment out of calibration can lead to an underfill condition.

CLUTCH PROBLEMS

Worn, damaged, or misaligned clutch components can cause difficult shifting, gear clash, and noise.

A worn or damaged clutch disc, pressure plate, or release bearing can cause hard shifting and gear clash.

REMOVAL

(1) Disconnect battery negative cable at strut tower.

(2) Remove air cleaner assembly.

(3) Disconnect gearshift cables at transaxle shift mechanism.

(4) Remove gearshift cable retaining clips at mount bracket. Secure cables out of the way.

(5) Remove three (3) rear mount bracket-to-transaxle case (vertical) bolts.

(6) Disconnect crankshaft position sensor connector. Remove sensor from transaxle case.

(7) Remove throttle body support bracket.

(8) Remove upper mount-to-case (vertical) bolt.

(9) Remove front mount bracket/starter upper bolt.

(10) Remove two (2) starter heat shield-to-bracket bolts.

(11) Disconnect oxygen sensor connector from mount bracket. Secure out of way.

(12) Raise vehicle on hoist.

(13) Remove front halfshaft assemblies. (Refer to 3 - DIFFERENTIAL & DRIVELINE/HALF SHAFT - REMOVAL)

(14) Remove left front wheel splash shield.

(15) Raise vehicle.

(16) Remove structural collar.

(17) Remove clutch/drive plate inspection cover.

(18) Remove four (4) modular clutch-to-drive plate bolts. While removing bolts, one tight-tolerance (slotted) drive plate hole will be encountered. When this bolt is removed, mark driveplate and modular clutch assembly at this location, and be sure to align marks upon reassembly.

(19) Remove front mount and bracket.

(20) Disconnect starter wire harness.

(21) Remove starter motor lower bolt. Remove starter motor from vehicle.

(22) Using Tool 6638A, disconnect hydraulic clutch quick-connect fitting.

(23) Remove clutch slave cylinder by lifting nylon tab with a small screwdriver, and then depressing cylinder inward towards case and rotating cylinder 60° counter-clockwise.

(24) Disconnect back-up lamp switch connector.

(25) Position screw jack with wood block under engine oil pan and secure.

(26) Remove upper mount bracket-to-case bolts.

(27) Lower engine/transaxle assembly enough to gain access to transaxle bellhousing-to-block bolts, **but do not remove bolts at this time.**.

(28) Install transmission jack. Secure transaxle to jack.

(29) Remove transaxle bellhousing-to-block bolts and lower transaxle from vehicle. Use helper if necessary.

T850 MANUAL TRANSAXLE (Continued)

DISASSEMBLY

(1) Remove clutch release lever and bearing (Fig. 10). Inspect release lever pivot balls and replace if necessary (Fig. 11). Use slide hammer C-3752 and remover/installer 6891 (Fig. 12) if pivot ball replacement is necessary.

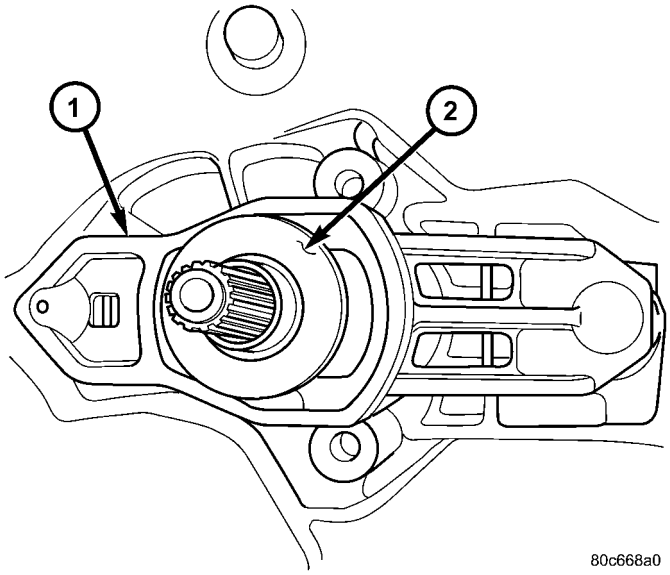

Fig. 10 Release Bearing and Lever

1 - RELEASE LEVER
2 - RELEASE BEARING

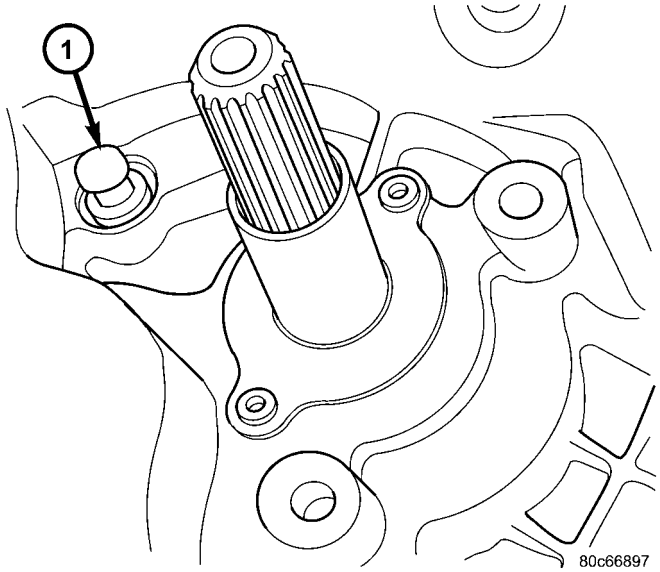

Fig. 11 Pivot Ball Orientation

1 - PIVOT BALL (1)

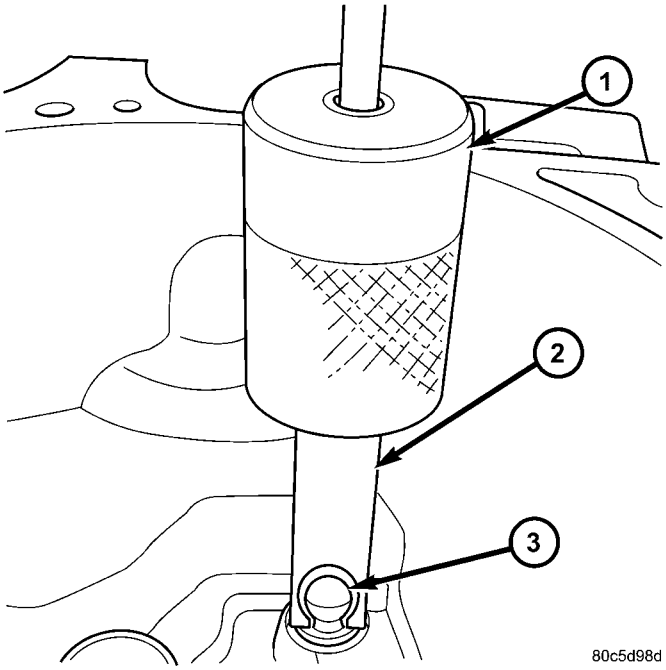

Fig. 12 Pivot Ball Removal/Installation

1 - C-3752 SLIDE HAMMER
2 - REMOVER/INSTALLER 6891
3 - PIVOT BALL

(2) Remove input shaft bearing retainer (Fig. 13).

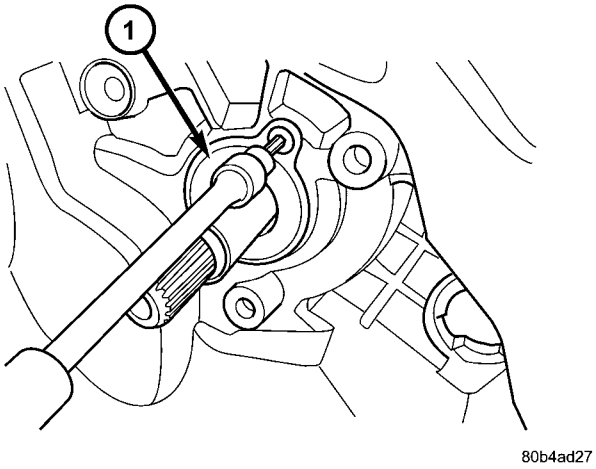

Fig. 13 Input Bearing Retainer

1 - INPUT BEARING RETAINER

T850 MANUAL TRANSAXLE (Continued)

NOTE: Place transaxle in neutral before shift cover removal.

(3) Remove shift cover-to-case bolts and remove shift cover assembly (Fig. 14).

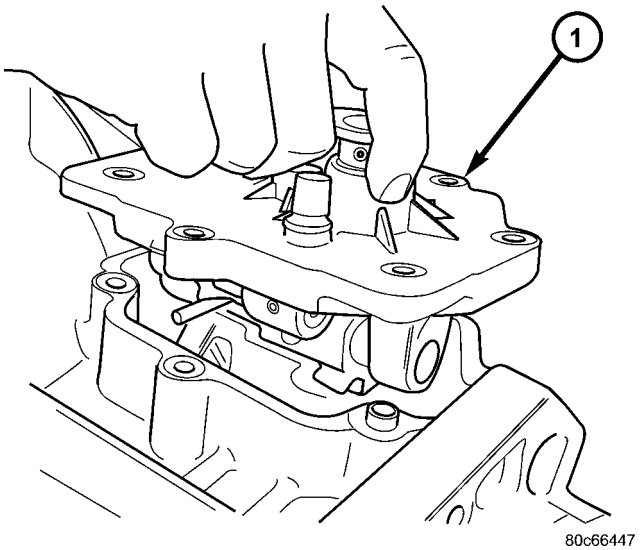

Fig. 14 Shift Cover Removal/Installation

1 - SHIFT COVER ASSEMBLY

(4) Place transaxle with bellhousing surface down.
(5) Remove backup lamp switch (Fig. 15).

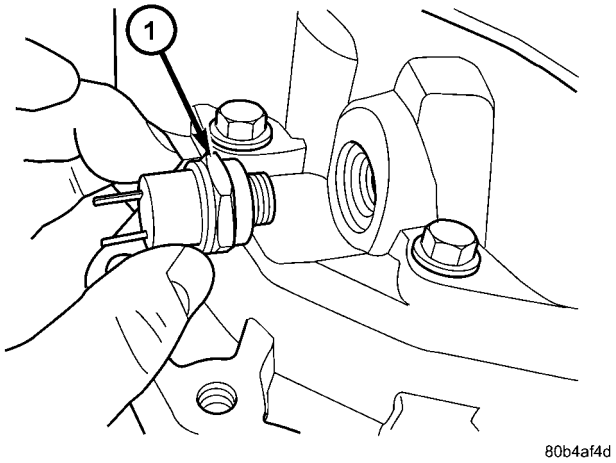

Fig. 15 Back-Up Lamp Switch

1 - BACK-UP LAMP SWITCH

(6) Remove end plate (Fig. 16).

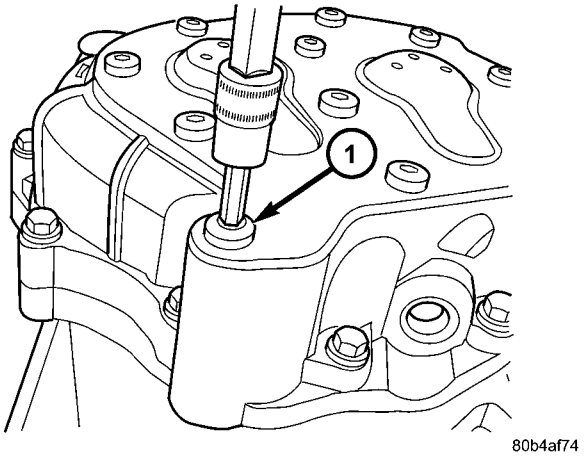

Fig. 16 End Plate Bolts

1 - BOLT (11)

(7) Set up lifting bar (tool 8489) as shown in (Fig. 17).
(8) Lift up on bar (input shaft bearing side) and remove input shaft bearing snap ring.
(9) Lift up on bar (intermediate shaft side) and remove intermediate shaft bearing snap ring.

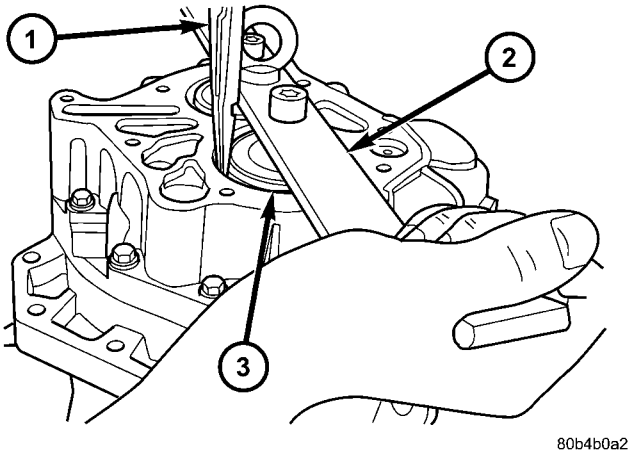

Fig. 17 Input Bearing Snap Ring

1 - SNAP RING PLIERS
2 - LIFTING BAR 8489
3 - SNAP RING

T850 MANUAL TRANSAXLE (Continued)

(10) Remove lifting bar 8489.
(11) Remove end cover-to-case bolts (12) (Fig. 18).

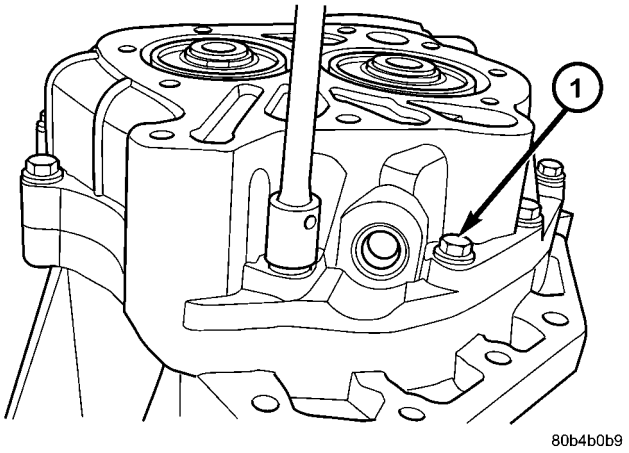

Fig. 18 End Cover Bolts

1 - BOLT (12)

(12) Remove end cover from transaxle (Fig. 19).

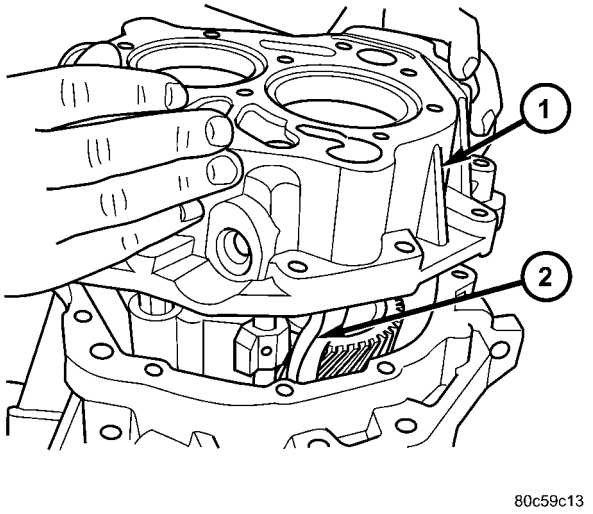

Fig. 19 End Cover Removal/Installation

1 - END COVER
2 - OIL TROUGH

(13) Remove 3/4 shift rail bushing from end cover using slide hammer C-3752 and remover 6786 (Fig. 20).

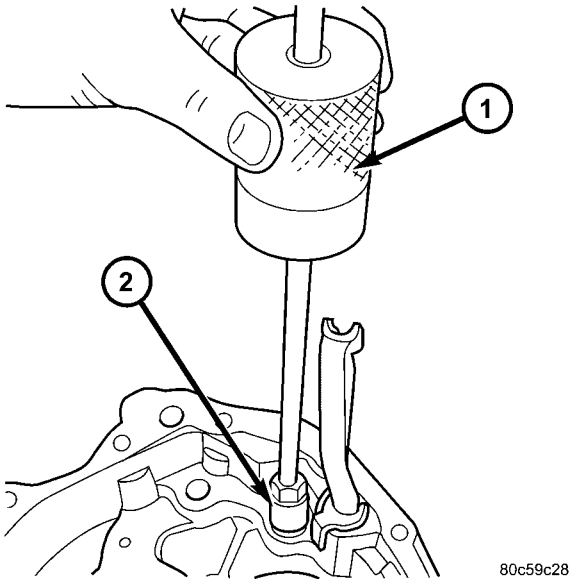

Fig. 20 3/4 Shift Rail Bushing Removal

1 - SLIDE HAMMER C-3752
2 - REMOVER 6786

(14) Remove reverse idler bolt (Fig. 21). Remove reverse idler gear, washers, and shaft upon geartrain removal.

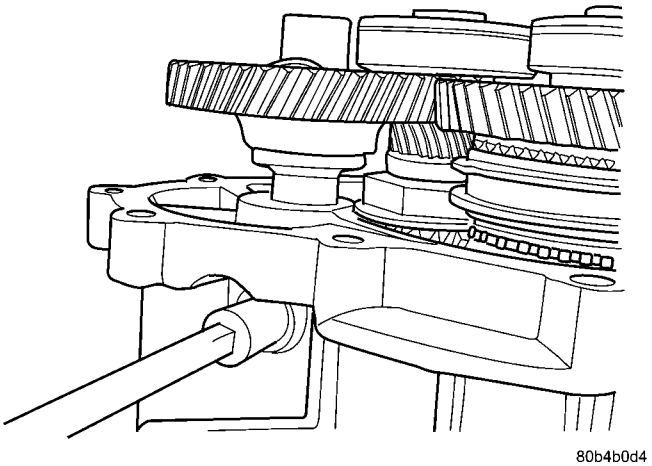

Fig. 21 Reverse Idler Shaft Bolt

T850 MANUAL TRANSAXLE (Continued)

(15) Remove 1-2/5-R shift rail (Fig. 22).

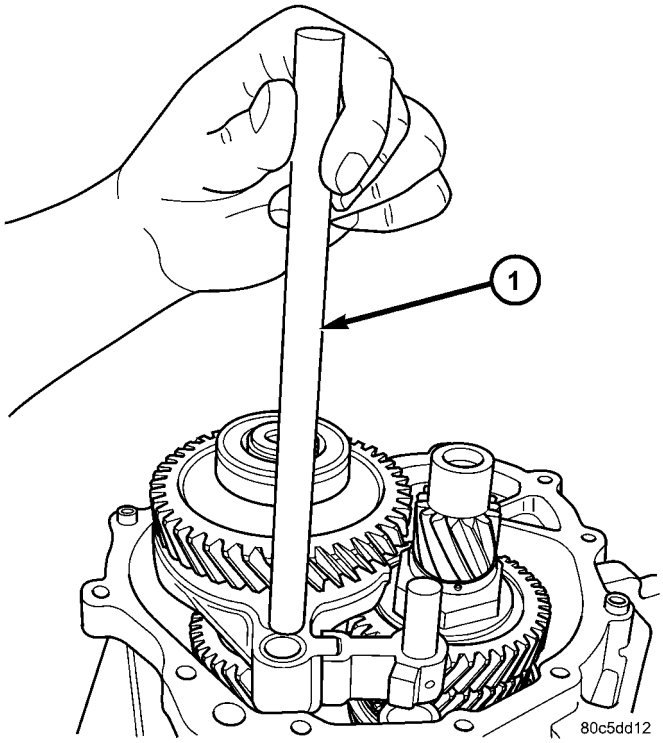

Fig. 22 1/2-5/R Shift Rail Removal/Installation

1 - 1/2-5/R SHIFT RAIL

(16) Install lifting bar 8489.

(17) Lift geartrain (w/reverse idler gear assy.) out of transaxle and install on fixture 8487 (Fig. 23).

(18) Remove remaining shift rail and forks from geartrain (Fig. 23).

(19) Remove lifting bar from geartrain.

NOTE: At this point, differential bearing turning torque should be measured to ensure proper shim selection upon reassembly.

(20) Measure differential turning torque. (Refer to 21 - TRANSMISSION/TRANSAXLE/MANUAL/DIFFERENTIAL - ADJUSTMENTS)

(21) Using a suitable screwdriver, remove extension housing axle oil seal (Fig. 24).

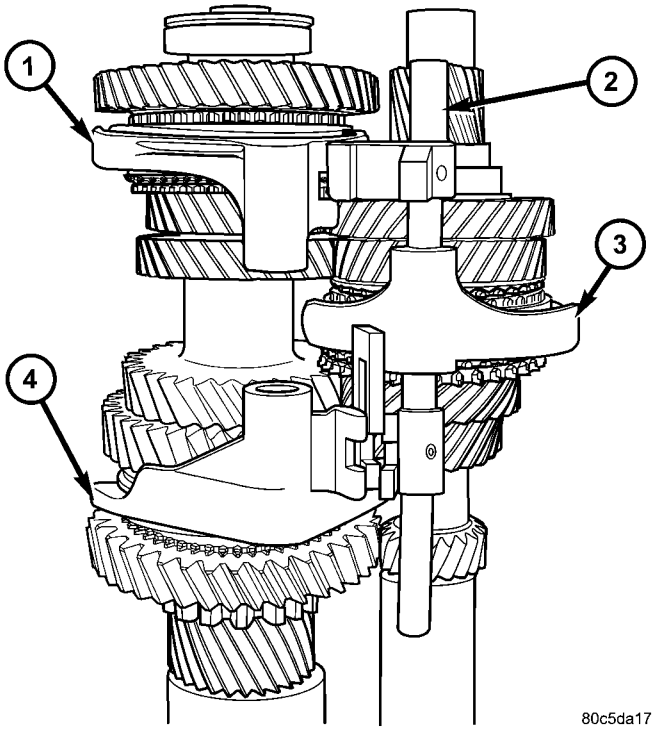

Fig. 23 Shift Fork/Rail Orientation

1 - 5/R FORK
2 - 3/4 RAIL ASSEMBLY
3 - 3/4 FORK
4 - 1/2 FORK

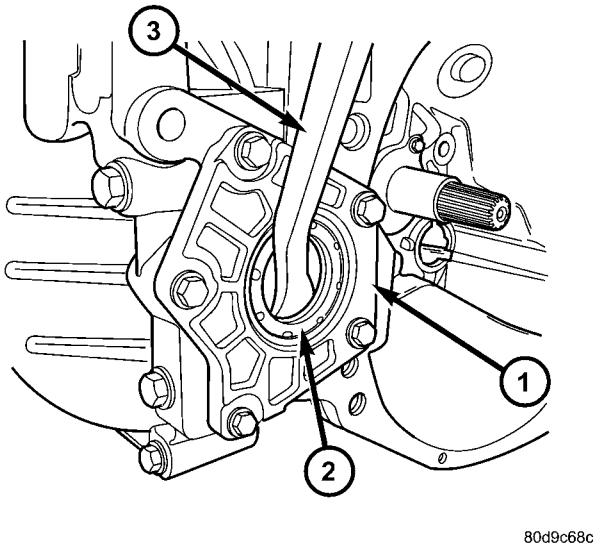

Fig. 24 Axle Seal Removal (Bearing Plate Side)

1 - PLATE
2 - SEAL
3 - SCREWDRIVER

T850 MANUAL TRANSAXLE (Continued)

(22) Remove bearing plate-to-case and differential cover bolts (Fig. 25).

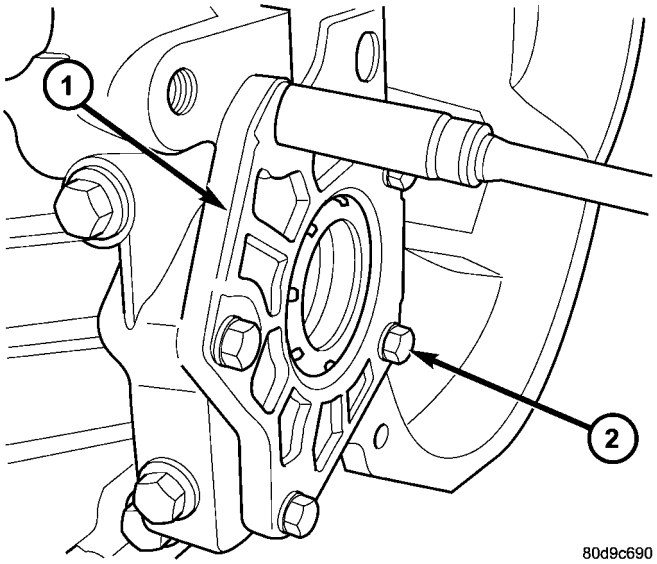

Fig. 25 Bearing Plate-to-Case Bolts

1 - PLATE
2 - BOLT (5)

(23) Remove differential cover bolts.

(24) Remove differential cover and bearing plate. If necessary, use a soft tipped hammer to aid in removal.

(25) Remove differential assembly. Note orientation of shim, oil slinger, and differential side bearing races (Fig. 26).

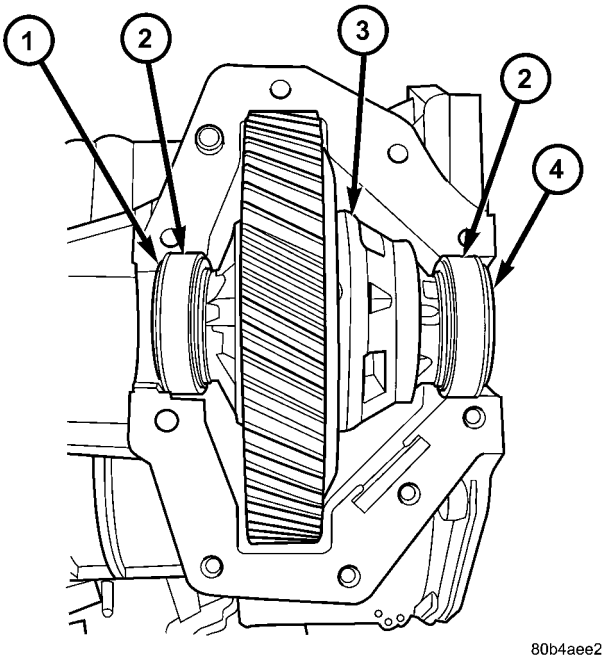

Fig. 26 Differential Shim/Slinger Orientation

1 - SLINGER
2 - BEARING RACE
3 - DIFFERENTIAL ASSEMBLY
4 - SHIM (SELECT)

(26) Remove differential chip collector magnet and clean (Fig. 27). **Magnet is adhered with RTV, and may require force to remove.**

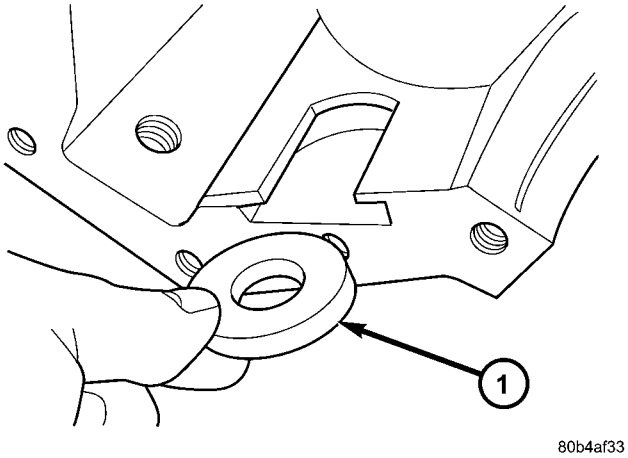

Fig. 27 Differential Magnet

1 - MAGNET

(27) Remove intermediate shaft bearing race with puller 8472 (Fig. 28).

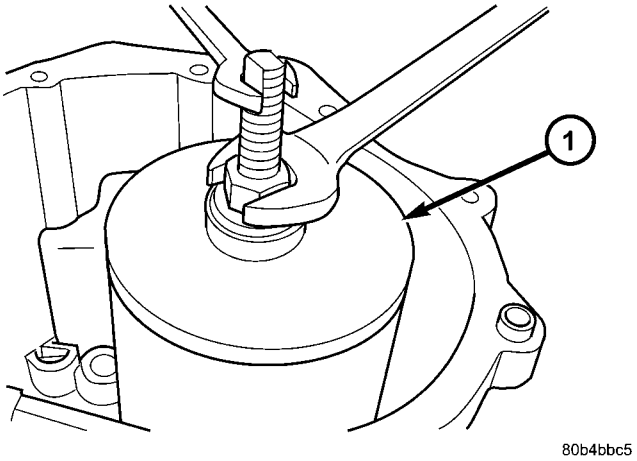

Fig. 28 Intermediate Shaft Bearing Race Removal

1 - REMOVER 8472

T850 MANUAL TRANSAXLE (Continued)

(28) Remove shift rail bushing from case with remover 6786 and slide hammer C-3752 (Fig. 29).

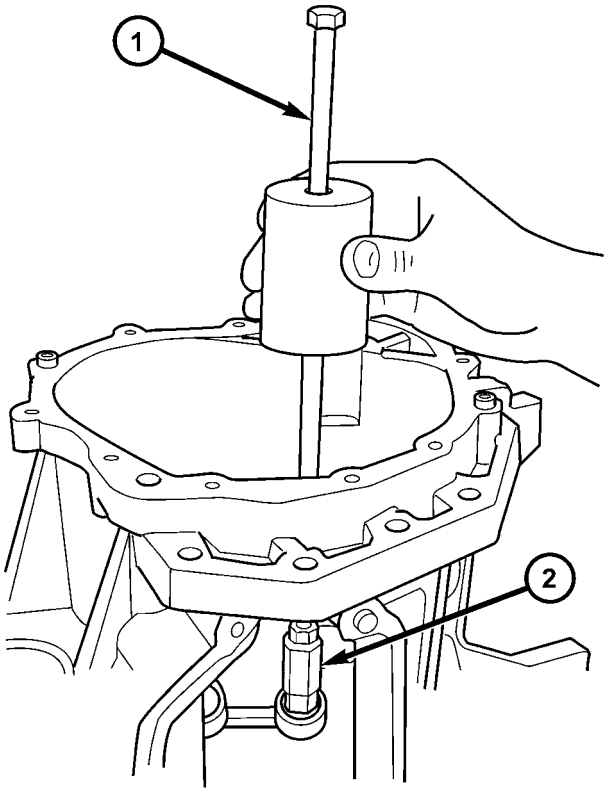

Fig. 29 Shift Rail Bushing Removal

1 - SLIDE HAMMER C-3752
2 - REMOVER 6786

(29) Remove input shaft bearing using an arbor press and tool 8474 (Fig. 30).

ASSEMBLY

NOTE: When assembling this transaxle, always use NEW snap rings.

NOTE: Before assembling transaxle, differential turning torque must be measured and adjusted. (Refer to 21 - TRANSMISSION/TRANSAXLE/MANUAL/DIFFERENTIAL - ADJUSTMENTS). Differential turning torque must be measured with geartrain out of case.

(1) Install input shaft bearing using an arbor press and remover/installer 8474 (Fig. 31).

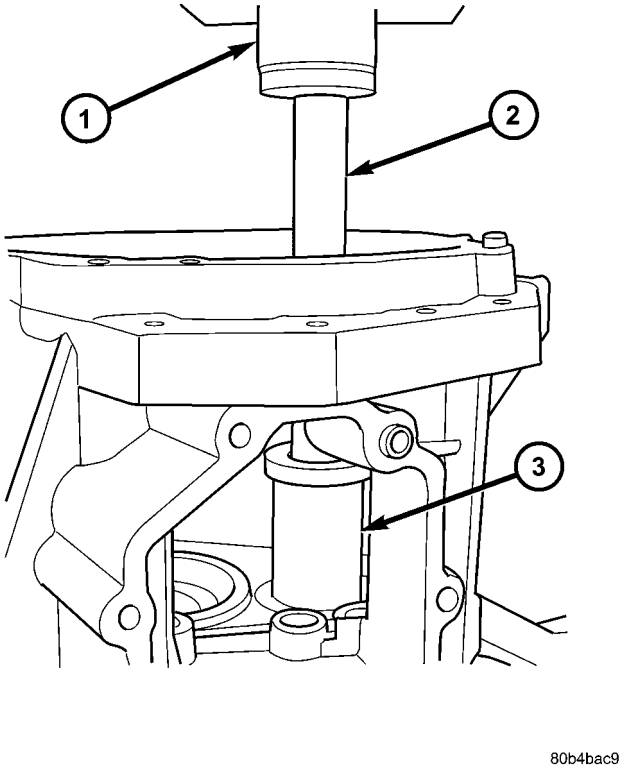

Fig. 30 Input Shaft Bearing Removal

1 - ARBOR PRESS
2 - DRIVER HANDLE C-4171
3 - REMOVER/INSTALLER 8474

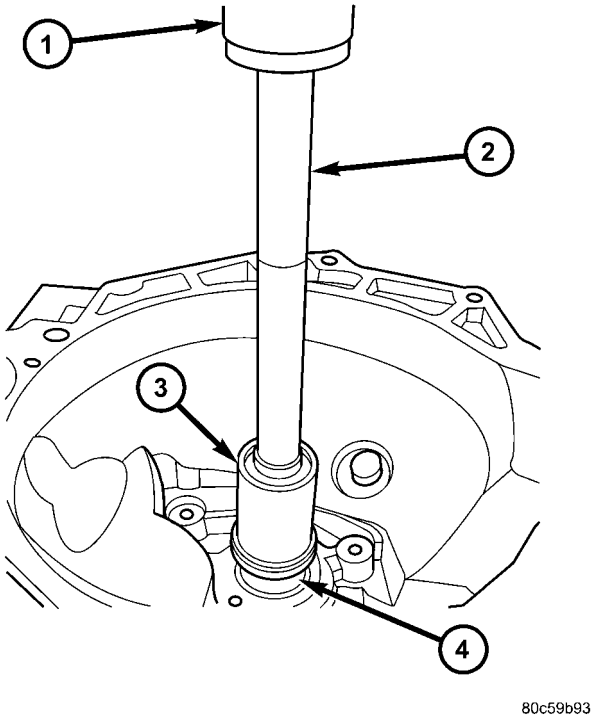

Fig. 31 Input Shaft Bearing Installation

1 - ARBOR PRESS
2 - C-4171 DRIVER HANDLE
3 - REMOVER/INSTALLER 8474
4 - INPUT SHAFT BEARING

T850 MANUAL TRANSAXLE (Continued)

(2) Install shift shaft bushing to case using installer 8475 (Fig. 32).

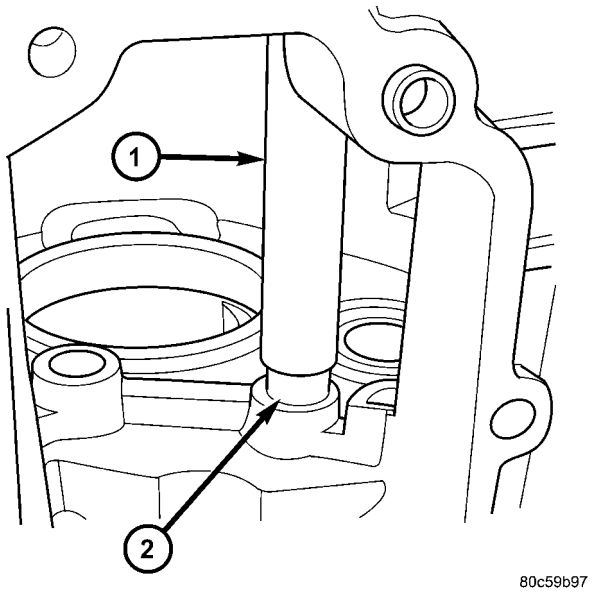

Fig. 32 Shift Shaft Bushing Installation

1 - INSTALLER 8475
2 - SHIFT SHAFT BUSHING

(3) Install intermediate shaft bearing race to case with an arbor press, driver handle C-4171, and installer 8471 (Fig. 33). Press until installer 8471 bottoms on transaxle case.

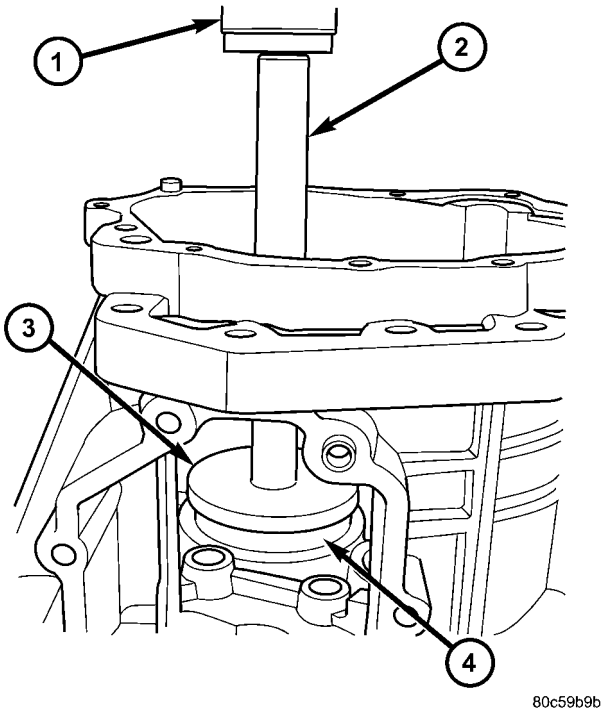

Fig. 33 Install Intermediate Shaft Bearing Race

1 - ARBOR PRESS
2 - DRIVER HANDLE C-4171
3 - INSTALLER 8471
4 - INTERMEDIATE SHAFT BEARING RACE

(4) Roll transaxle assembly on side.

(5) Install differential chip collector magnet (Fig. 34). Retain to case with a dab of Mopar® Gear Lube RTV.

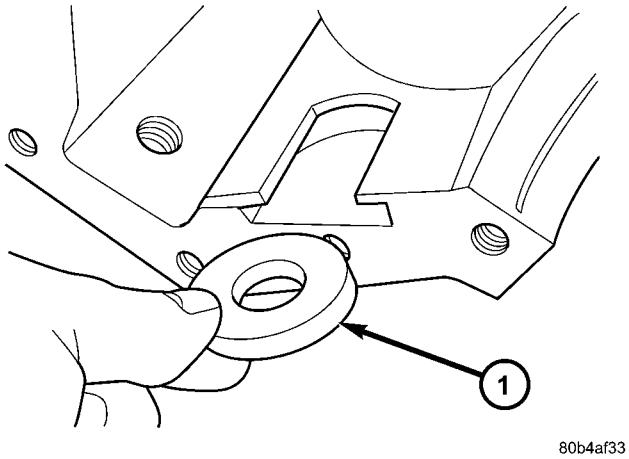

Fig. 34 Differential Magnet

1 - MAGNET

(6) Install differential assembly with bearing races and select shim (Fig. 35). Shim selection was determined before transaxle assembly (Refer to 21 - TRANSMISSION/TRANSAXLE/MANUAL/DIFFERENTIAL - ADJUSTMENTS).

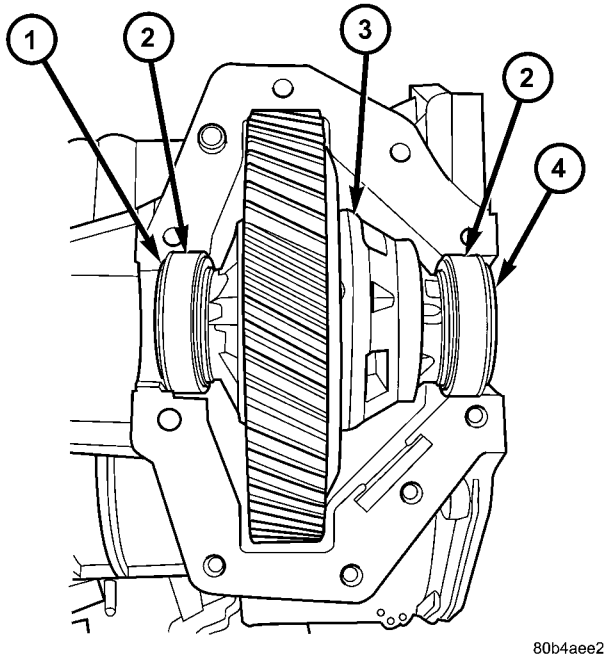

Fig. 35 Differential Shim/Slinger Orientation

1 - SLINGER
2 - BEARING RACE
3 - DIFFERENTIAL ASSEMBLY
4 - SHIM (SELECT)

T850 MANUAL TRANSAXLE (Continued)

(7) Install a 1 mm (0.04 in.) bead of Mopar® Gasket Maker to differential cover and install to case. Torque differential cover-to-case bolts to 54 N·m (40 ft. lbs.).

(8) Install a 1 mm (0.04 in.) bead of Mopar® Gasket Maker to bearing plate. Install bearing plate to differential cover and case and torque bolts to 28 N·m (250 in. lbs.) (Fig. 36).

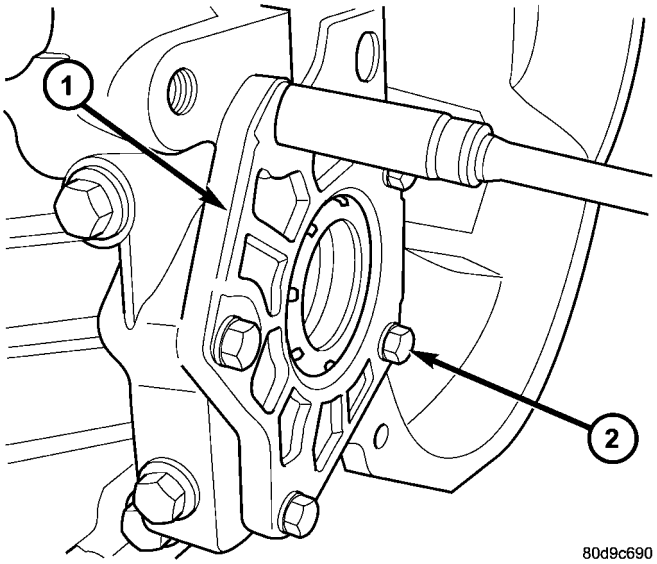

Fig. 36 Bearing Plate-to-Case Bolts

1 - PLATE
2 - BOLT (5)

(9) Verify proper differential turning torque.

(10) Install both axle output shaft seals using driver handle C-4171 and installer 8476 (Fig. 37).

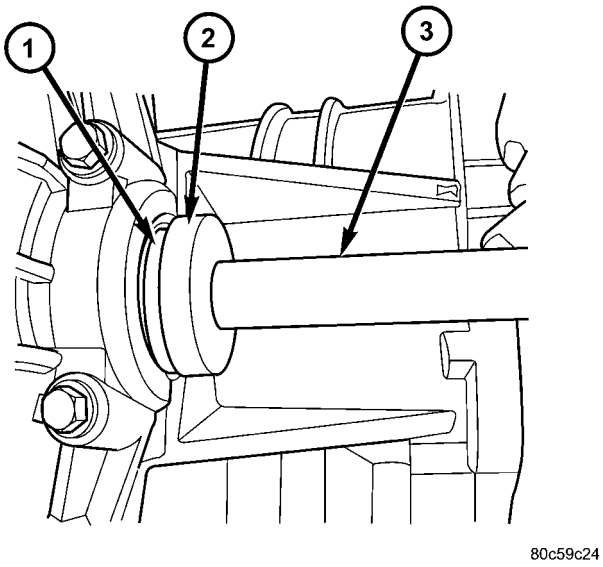

Fig. 37 Axle Seal Installation—Typical

1 - SEAL
2 - INSTALLER 8476
3 - DRIVER HANDLE C-4171

NOTE: If input shaft assembly was not disassembled, it is necessary to remove input shaft sealed ball bearing before assembling transaxle. (Refer to 21 - TRANSMISSION/TRANSAXLE/MANUAL/INPUT SHAFT - DISASSEMBLY)

(11) Install assembled input and intermediate shafts to fixture 8487 (Fig. 38).

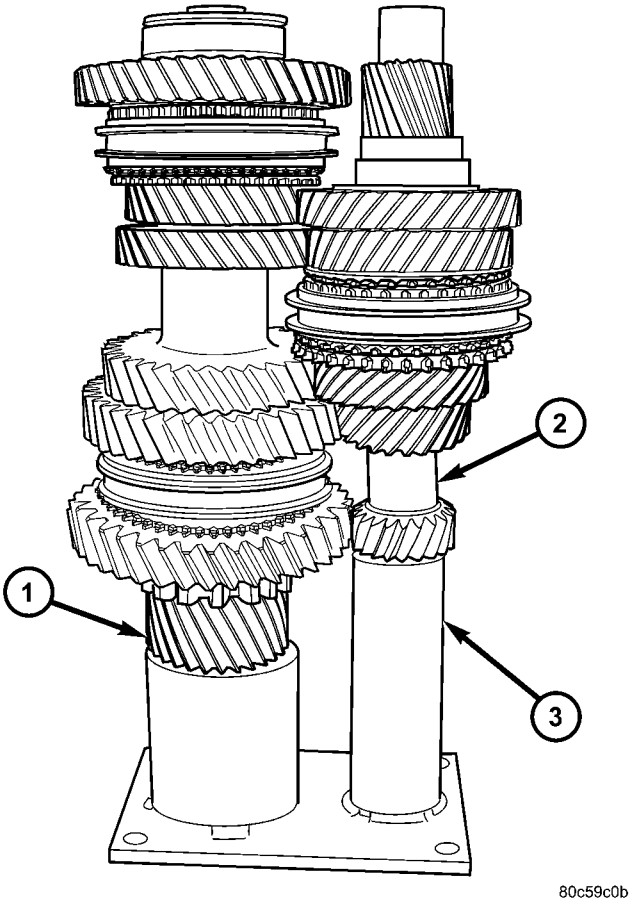

Fig. 38 Install Geartrain to Fixture 8487

1 - INTERMEDIATE SHAFT
2 - INPUT SHAFT
2 - FIXTURE 8487

T850 MANUAL TRANSAXLE (Continued)

(12) Install shift forks and 3/4 rail assembly to geartrain as shown in (Fig. 39).

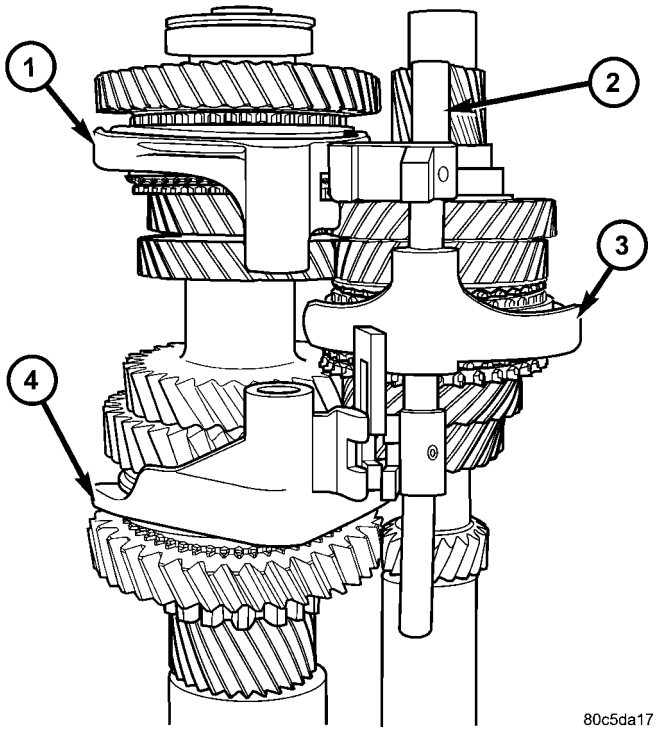

Fig. 39 Shift Fork/Rail Orientation

1 - 5/R FORK
2 - 3/4 RAIL ASSEMBLY
3 - 3/4 FORK
4 - 1/2 FORK

NOTE: Before installing geartrain, make sure that input shaft sealed roller bearing is not installed, otherwise reverse idler assembly installation will be difficult. (Refer to 21 - TRANSMISSION/TRANSAXLE/ MANUAL/INPUT SHAFT - DISASSEMBLY)

(13) Install lifting bar 8489 to geartrain. Install geartrain to case. **When installing geartrain to case, use care not to damage bearing surfaces.**

(14) Remove lifting bar 8489 from geartrain.

(15) Install shift 1/2-5/R rail as shown in (Fig. 40).

(16) Install reverse idler shaft into position (Fig. 41). Install and torque shaft-to-case bolt to 54 N·m (40 ft. lbs.).

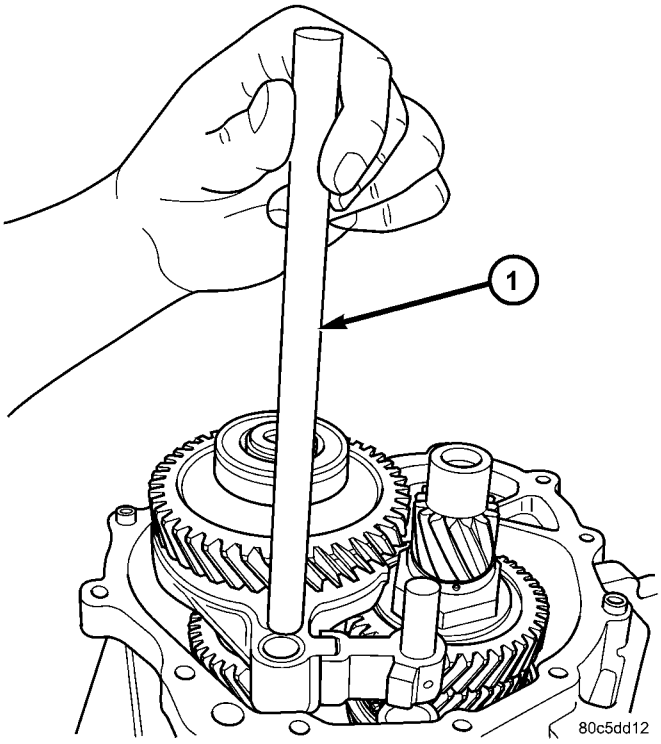

Fig. 40 Shift Rail Installation

1 - 1/2-5/R SHIFT RAIL

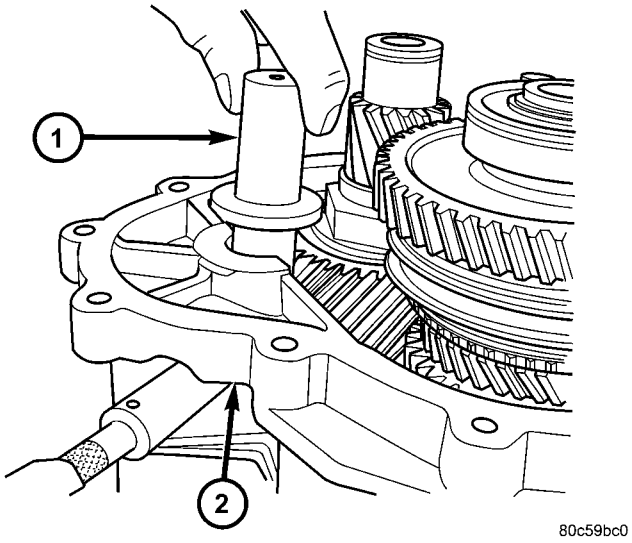

Fig. 41 Install Reverse Idler Shaft

1 - REVERSE IDLER SHAFT
2 - BOLT

T850 MANUAL TRANSAXLE (Continued)

(17) Install reverse idler gear bearing (Fig. 42).

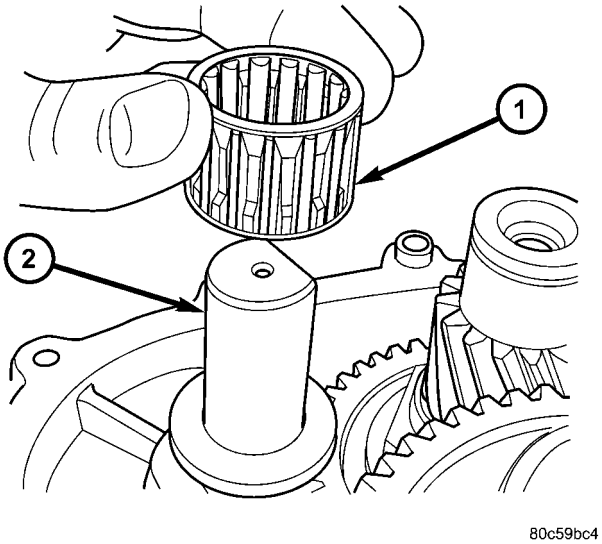

Fig. 42 Install Reverse Idler Gear Bearing

1 - NEEDLE BEARING
2 - REVERSE IDLER SHAFT

(18) Install reverse idler gear with hub down as shown in (Fig. 43).

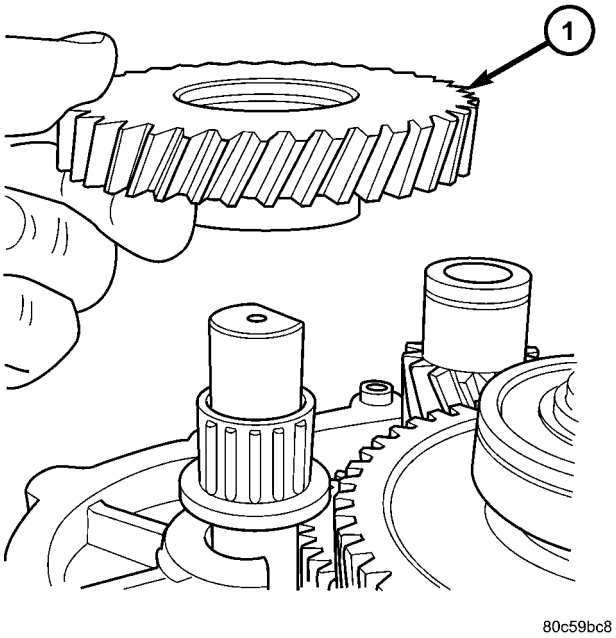

Fig. 43 Install Reverse Idler Gear

1 - REVERSE IDLER GEAR

(19) Install flat washer (Fig. 44).

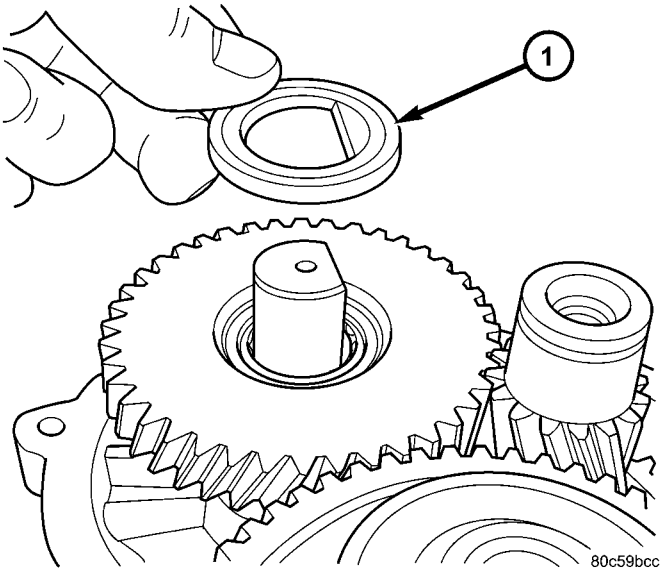

Fig. 44 Install Flat Washer

1 - FLAT WASHER

(20) Install wave washer (Fig. 45).

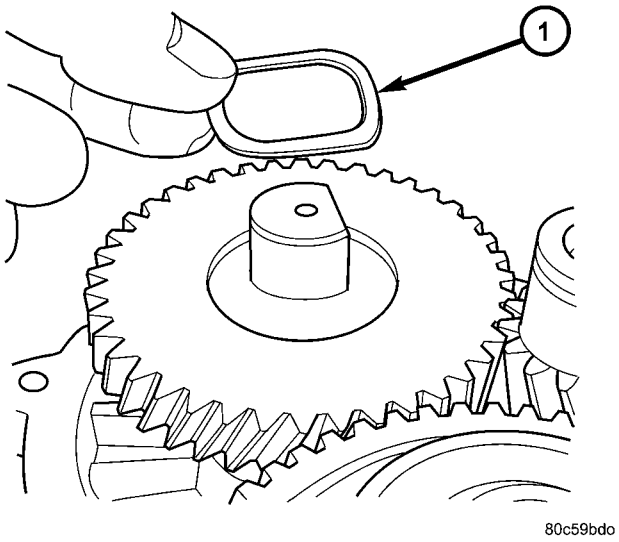

Fig. 45 Install Wave Washer

1 - WAVE WASHER

T850 MANUAL TRANSAXLE (Continued)

(21) Install input shaft sealed roller bearing using installer 8482 (Fig. 46).

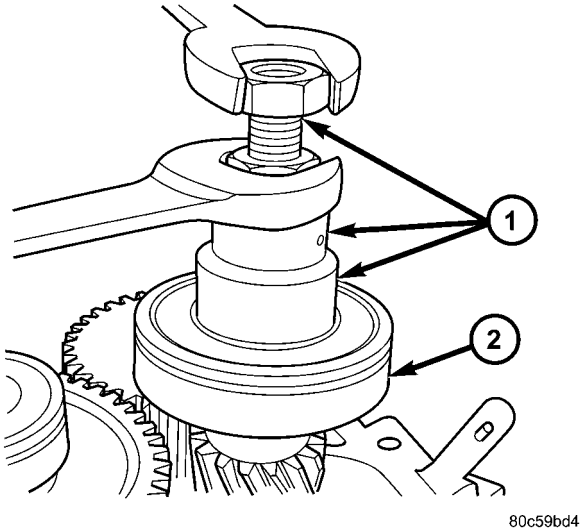

Fig. 46 Install Input Shaft Sealed Roller Bearing

1 - INSTALLER 8482
2 - SEALED ROLLER BEARING

(22) Install **new** input shaft bearing snap ring (Fig. 47).

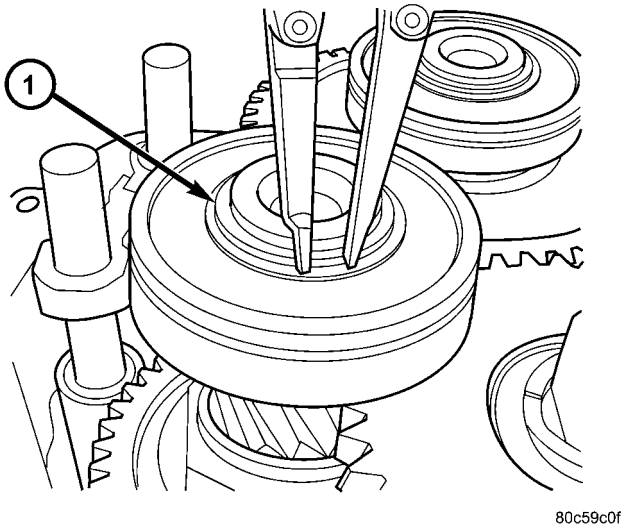

Fig. 47 Input Shaft Bearing Snap Ring

1 - SNAP RING

(23) Install shift rail bushing to end cover using installer 8475 (Fig. 48).

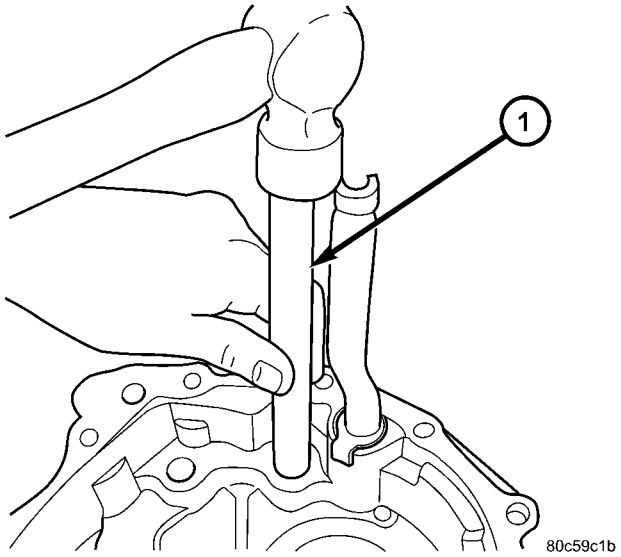

Fig. 48 Shift Rail Bushing Installation

1 - INSTALLER 8475

(24) Apply a 1 mm (0.04 in.) bead of Mopar® Gasket Maker to transaxle end cover and install to transaxle case (Fig. 49). **While installing end cover, be sure to guide oil trough into pocket (Fig. 50).** Torque end cover-to-case bolts to 28 N·m (250 in. lbs.) (Fig. 51).

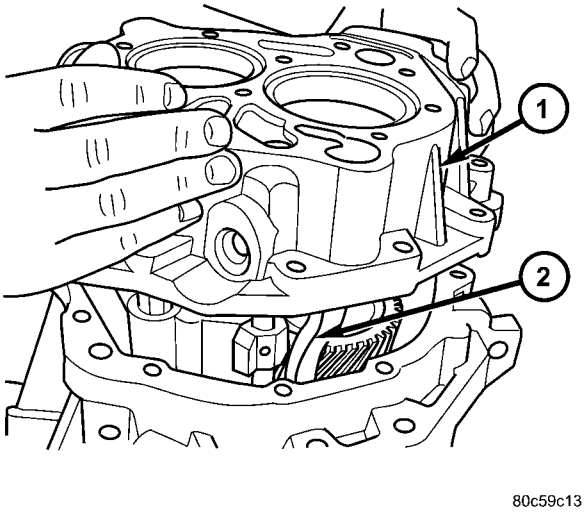

Fig. 49 End Cover Removal/Installation

1 - END COVER
2 - OIL TROUGH

T850 MANUAL TRANSAXLE (Continued)

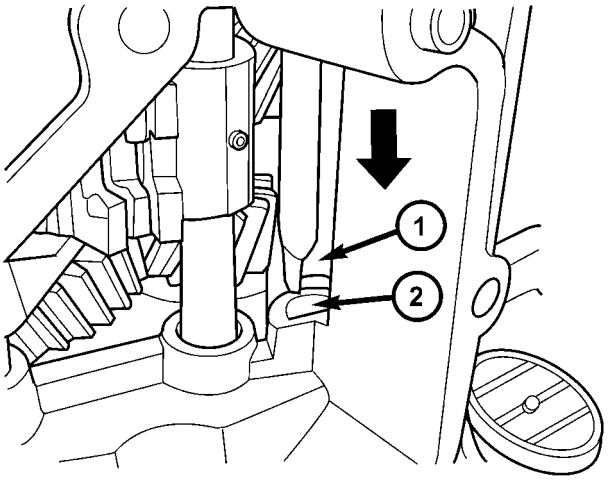

Fig. 50 Oil Trough Pocket

1 - OIL TROUGH
2 - POCKET

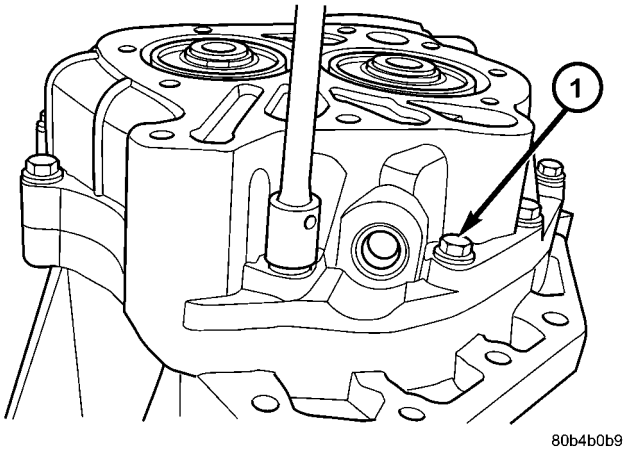

Fig. 51 End Cover Bolts

1 - BOLT (12)

(25) Install lifting bar 8489 to geartrain.

(26) Lift up on bar (input shaft side) and install input shaft bearing snap ring (Fig. 52).

(27) Lift up on bar (intermediate shaft side) and install intermediate shaft bearing snap ring.

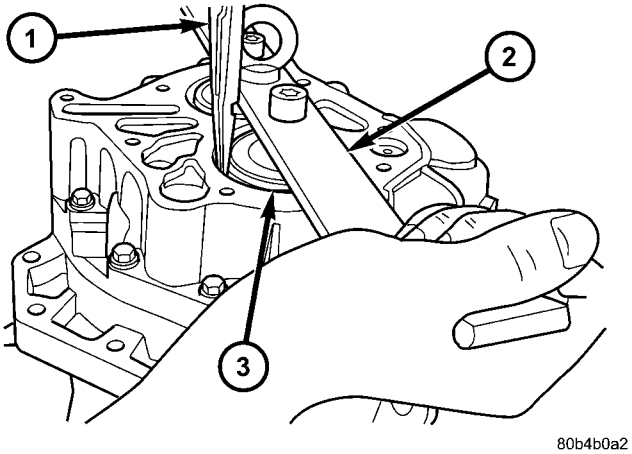

Fig. 52 Input Bearing Snap Ring

1 - SNAP RING PLIERS
2 - LIFTING BAR 8489
3 - SNAP RING

(28) Remove lifting bar 8489.

(29) Install a bead of Mopar® Gear Lube RTV to end plate and immediately install to case. Install and torque bolts to 28 N·m (250 in. lbs.) (Fig. 53).

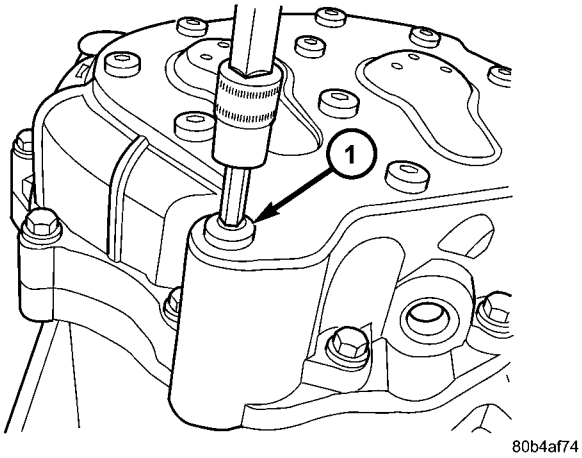

Fig. 53 End Cover Bolts

1 - BOLT (11)

T850 MANUAL TRANSAXLE (Continued)

(30) Install back up lamp switch and torque to 23 N·m (17 ft. lbs.) (Fig. 54).

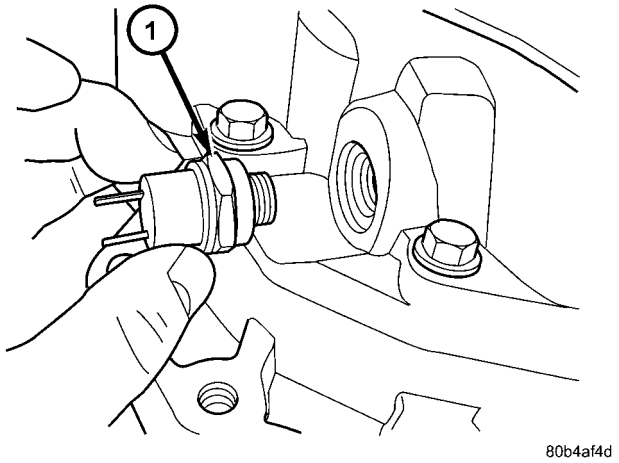

Fig. 54 Back-Up Lamp Switch

1 - BACK-UP LAMP SWITCH

(31) Apply a 1 mm (0.04 in.) bead of Mopar® Gasket Maker to shift cover assembly. Place shift cover and transaxle geartrain into neutral and install shift cover (Fig. 55) and torque bolts to 28 N·m (250 in. lbs.).

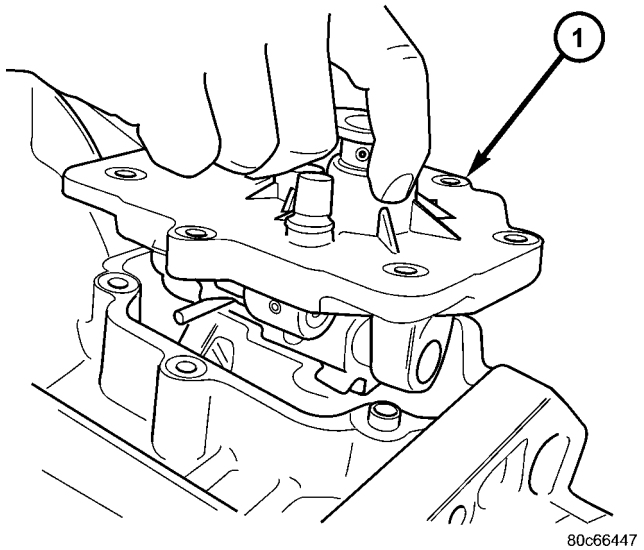

Fig. 55 Shift Cover Removal/Installation

1 - SHIFT COVER ASSEMBLY

(32) Install input shaft bearing retainer (Fig. 56). Torque bolts to 12 N·m (105 in. lbs.).

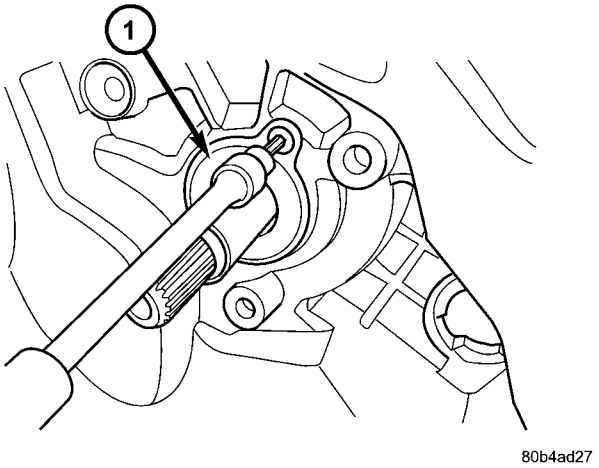

Fig. 56 Input Bearing Retainer

1 - INPUT BEARING RETAINER

(33) If previously removed, install clutch release lever pivot ball(s) using slide hammer C-3752 and remover/installer 6891 (Fig. 57) (Fig. 58).

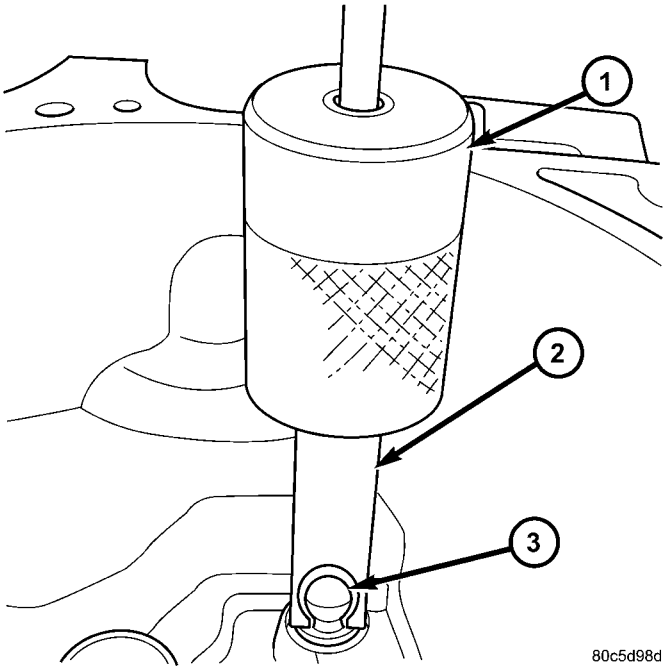

Fig. 57 Pivot Ball Removal/Installation

1 - C-3752 SLIDE HAMMER
2 - REMOVER/INSTALLER 6891
3 - PIVOT BALL

T850 MANUAL TRANSAXLE (Continued)

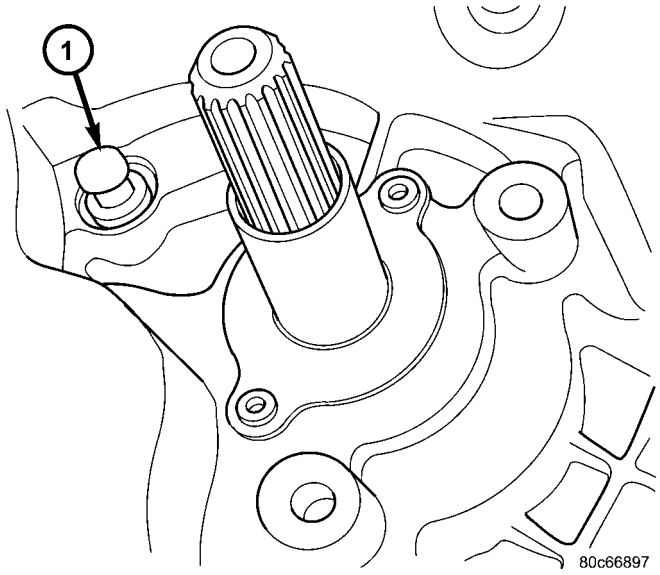

Fig. 58 Pivot Ball Position

1 - PIVOT BALL (1)

(34) Install clutch release bearing to lever. Apply grease to interface (contact) points. Make sure release bearing retainers engage lever pocket as shown in (Fig. 59).

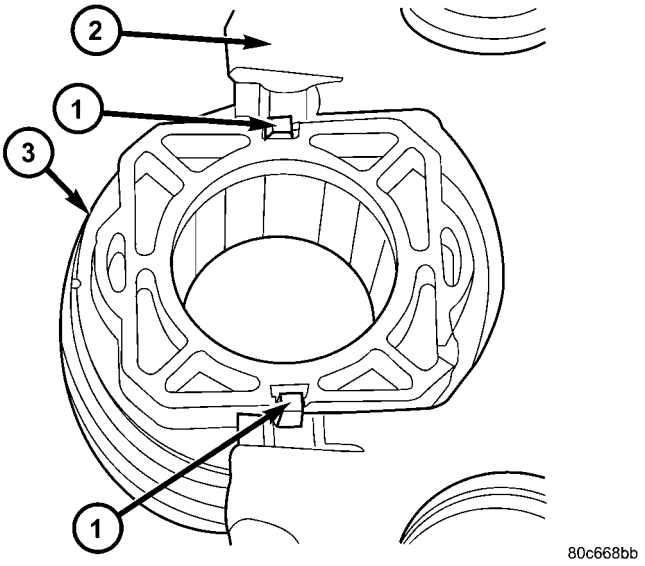

Fig. 59 Release Bearing-to-Lever

1 - RETAINER (2)
2 - RELEASE LEVER
3 - RELEASE BEARING

(35) Apply grease to pivot ball, and on release lever at slave cylinder contact point.

(36) Install clutch release bearing/lever assembly into position by sliding bearing onto input bearing retainer, and using moderate hand pressure to seat release lever to pivot ball (Fig. 60). A “pop” sound should be heard. Verify proper engagement by lightly pulling outward on lever at pivot ball location, and then actuating lever and bearing to ensure proper operation.

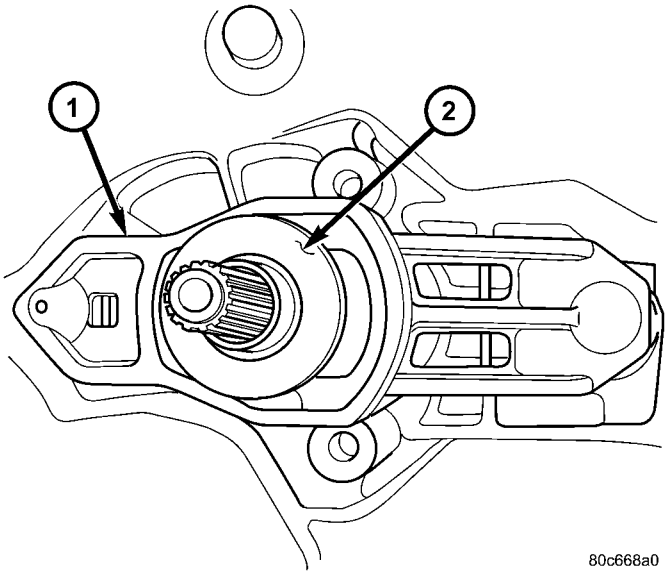

Fig. 60 Release Bearing and Lever

1 - RELEASE LEVER
2 - RELEASE BEARING

INSTALLATION

(1) If previously removed, install modular clutch assembly to input shaft.

(2) Install and secure transaxle to transmission jack, and install transaxle to engine.

(3) Install and torque transaxle bellhousing-to-engine block bolts to 95 N·m (70 ft. lbs.).

(4) Raise engine/transaxle assembly into position. Align transaxle with left mount bracket. Install and torque mount bracket-to-transaxle bolts to 54 N·m (40 ft. lbs.).

(5) Remove transmission jack.

(6) Install and secure ground cable.

(7) Install four (4) modular clutch-to-driveplate bolts. Align drive plate and modular clutch alignment marks placed upon disassembly. Start with tight-tolerance (slotted) hole, install and torque bolts to 88 N·m (65 ft. lbs.) torque.

(8) Install clutch/drive plate inspection cover.

(9) Install clutch slave cylinder into position, noting orientation of different size lugs. While depressing inward, rotate slave cylinder clockwise until nylon locating tab rests in transaxle case cutout, and the hydraulic tube is vertical.

(10) Install starter motor and install lower bolt. Connect starter motor wire harness.

(11) Connect back-up lamp switch connector.

(12) Install rear mount bracket-to-case bolts. Torque lower (horizontal) bolt to 54 N·m (40 ft. lbs.).

T850 MANUAL TRANSAXLE (Continued)

(13) Install front mount/bracket and upper starter bolt.

(14) Install structural collar.

(15) Install halfshaft assemblies. (Refer to 3 - DIFFERENTIAL & DRIVELINE/HALF SHAFT - INSTALLATION)

(16) Install left wheel opening splash shield.

(17) Check transaxle fluid level. Fill transaxle with suitable amount of Mopar® ATF+4 (Automatic Transmission Fluid—Type 9602). (Refer to 21 - TRANSMISSION/TRANSAXLE/MANUAL/FLUID - STANDARD PROCEDURE)

(18) Lower vehicle.

(19) Connect oxygen sensor harness to front mount bracket.

(20) Torque rear mount bracket-to-case bolts to 54 N·m (40 ft. lbs.).

(21) Install and connect crankshaft position sensor.

(22) Install shift cables to mount perches. Connect to transaxle shift mechanism and install cable retainer clips.

(23) Install throttle body support bracket.

(24) Install air cleaner assembly.

(25) Connect battery negative cable.

SPECIFICATIONS - T850 MANUAL TRANSAXLE

GENERAL SPECIFICATIONS

DESCRIPTION	SPECIFICATION
Transaxle Type	Constant-mesh, fully synchronized 5-speed with integral differential
Lubrication Method	Splash oil collected in case passage and oil trough and distributed to mainshafts via gravity
Fluid Type	ATF+4 (Automatic Transmission Fluid—Type 9602)

GEAR RATIOS

GEAR	RATIO
1st	3.65
2nd	2.05
3rd	1.37
4th	0.97
5th	0.76
Reverse	3.47
Final Drive Ratio	3.77

INPUT SHAFT

BLOCKER RING WEAR GAP	
3rd Gear	0.856-1.539 mm (0.0338-0.0606 in.)
4th Gear	0.762-1.631 mm (0.030-0.064 in.)
GEAR END PLAY	
3rd Gear	0.099-0.505 mm (0.004-0.020 in.)
4th Gear	0.048-0.457 mm (0.002-0.018 in.)

T850 MANUAL TRANSAXLE (Continued)

INTERMEDIATE SHAFT

BLOCKER RING WEAR GAP	
1st Gear	0.66-1.84 mm (0.026-0.072 in.)
2nd Gear	0.66-1.84 mm (0.026-0.072 in.)
5th Gear	0.86-1.54 mm (0.034-0.061 in.)
Reverse	0.77-1.63 mm (0.030-0.064 in.)
GEAR END PLAY	
1st Gear	0.091-0.828 mm (0.004-0.033 in.)
2nd Gear	0.051-0.787 mm (0.002-0.031 in.)
5th Gear	0.102-0.762 mm (0.004-0.030 in.)
Reverse	0.066-0.805 mm (0.003-0.0317 in.)

DIFFERENTIAL

DESCRIPTION	METRIC	STANDARD
Differential Turning Torque	2.3-3.4 N·m	20-30 in. lbs.
Side Gear End Play (each side)	0.025-0.152 mm	0.001-0.006 in.

TORQUE SPECIFICATIONS

DESCRIPTION	N·m	Ft. Lbs.	In. Lbs.
Bolt, Bearing Plate-to-Case	28	—	250
Bolt, Differential Cover-to-Case	54	40	—
Bolt, End Cover-to-Case	28	—	250
Bolt, End Cover Plate-to-Cover	28	—	250
Bolt, Reverse Idler Shaft-to-Case	54	40	—
Bolt, Ring Gear-to-Differential Case	95	70	—
Bolt, Shift Cover-to-Case	28	—	250
Nut, 5th Gear-to-Input Shaft	262	193	—
Plug, Drain	23	17	—
Screw, Input Bearing Retainer	12	—	105
Switch, Back-Up Lamp	23	17	—
Vent	7	—	60

T850 MANUAL TRANSAXLE (Continued)

SPECIAL TOOLS - T850 TRANSAXLE

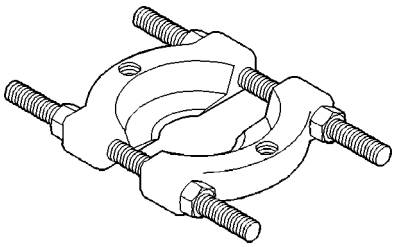

Bearing Splitter, P-334

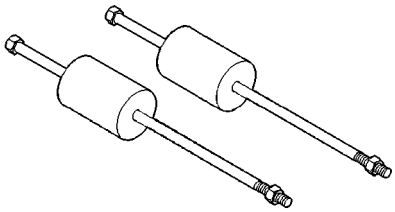

Slide Hammer, C-3752

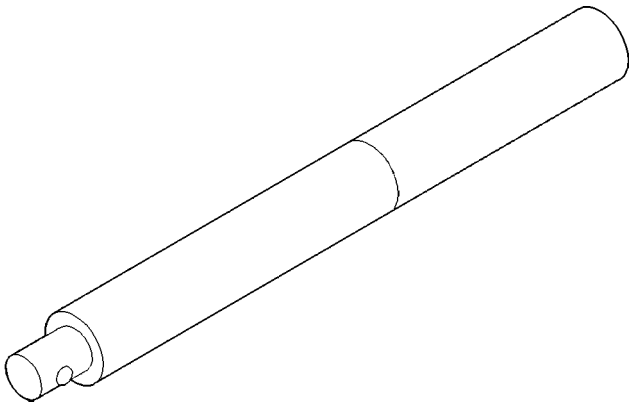

Universal Handle, C-4171

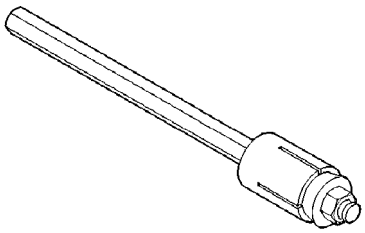

Torque Tool, C-4995

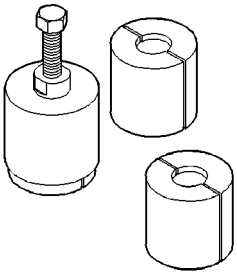

Puller Set, 5048

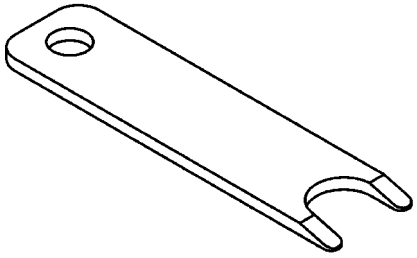

Disconnect Tool, 6638A

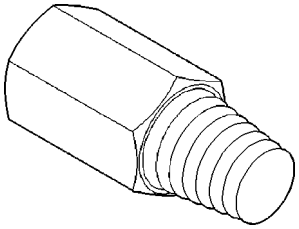

Remover, 6786

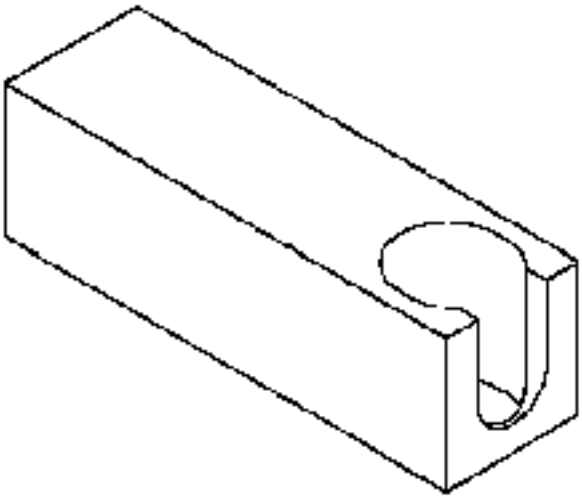

Remover/Installer, 6891

T850 MANUAL TRANSAXLE (Continued)

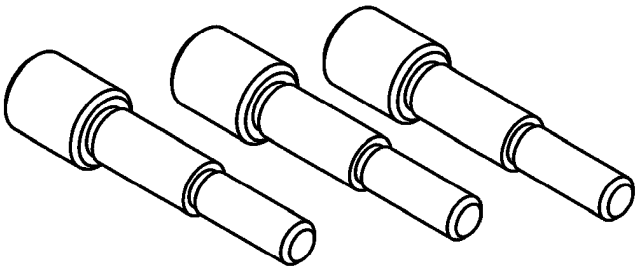

Alignment Pins, 8470

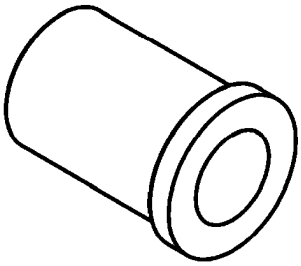

Remover/Installer, 8474

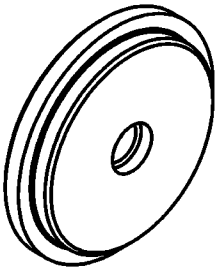

Installer, 8471

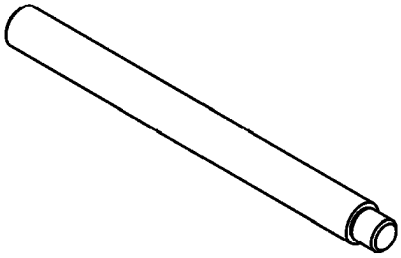

Installer, 8475

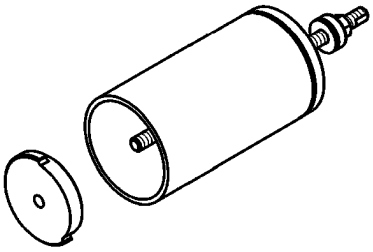

Race Remover, 8472

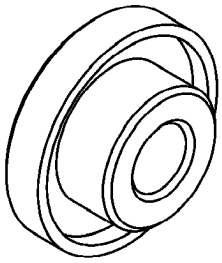

Installer, 8476

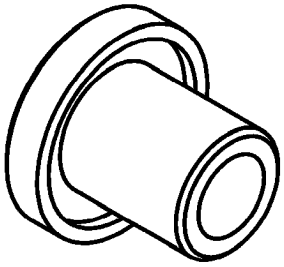

Bearing Installer, 8473

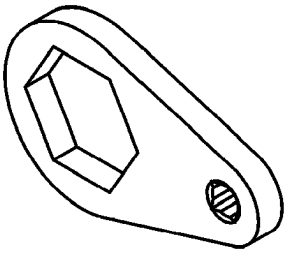

Wrench, 8478

T850 MANUAL TRANSAXLE (Continued)

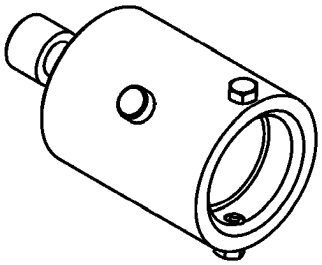

Stake Tool, 8479

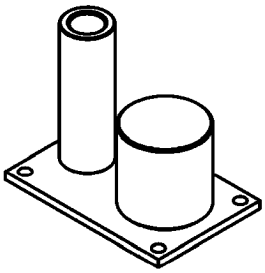

Fixture, 8487

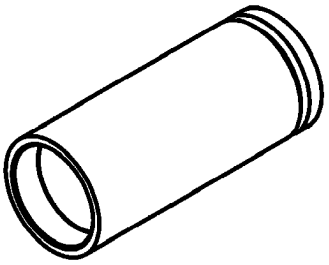

Installer, 8481

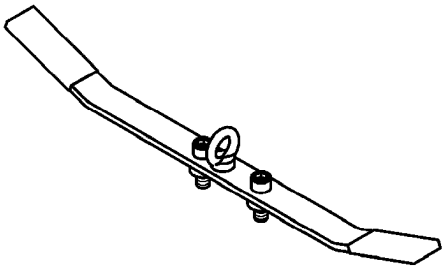

Lifting Bar, 8489

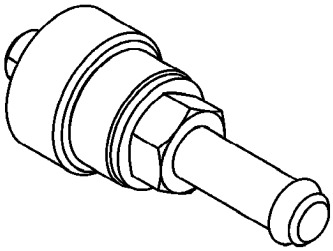

Bearing Installer, 8482

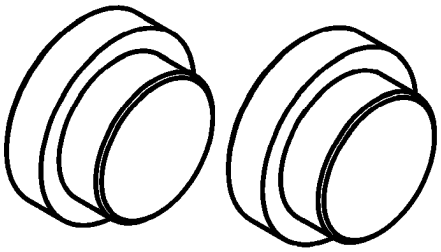

Thrust Buttons, 8491

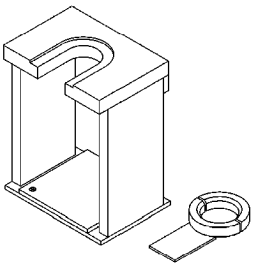

Fixture, 8483

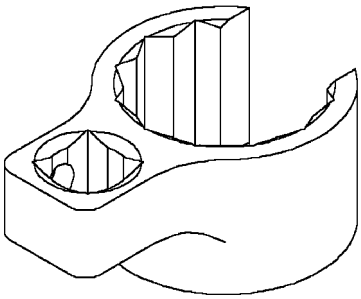

Wrench, 8827

AXLE SEALS

REMOVAL

(1) Raise vehicle on hoist.

(2) Remove one or both front halfshaft assemblies. (Refer to 3 - DIFFERENTIAL & DRIVELINE/HALF SHAFT - REMOVAL)

(3) Using a suitable screwdriver, remove one or both axle seals (Fig. 61).

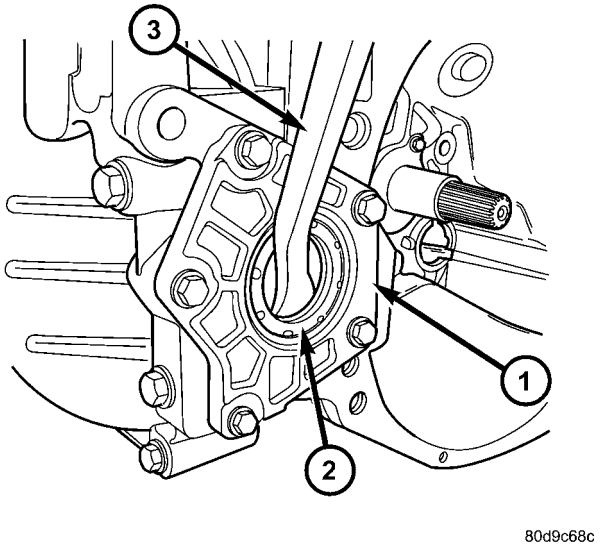

Fig. 61 Axle Seal Removal (Bearing Plate Side)

1 - PLATE
2 - SEAL
3 - SCREWDRIVER

INSTALLATION

(1) Using driver handle C-4171 and installer 8476, install axle seals into position (Fig. 62).

(2) Install one or both front halfshaft assemblies. (Refer to 3 - DIFFERENTIAL & DRIVELINE/HALF SHAFT - INSTALLATION)

(3) Check transaxle fluid level and adjust if necessary. (Refer to 21 - TRANSMISSION/TRANSAXLE/ MANUAL/FLUID - STANDARD PROCEDURE)

(4) Lower vehicle.

BACK-UP LAMP SWITCH

REMOVAL

(1) Raise vehicle on hoist.

(2) Disconnect back-up lamp switch connector.

(3) Remove back-up lamp switch (Fig. 63).

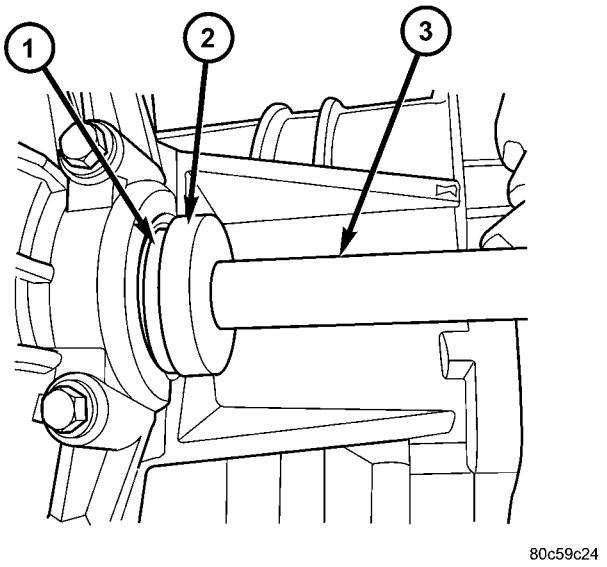

Fig. 62 Axle Seal Installation

1 - SEAL
2 - INSTALLER 8476
3 - DRIVER HANDLE C-4171

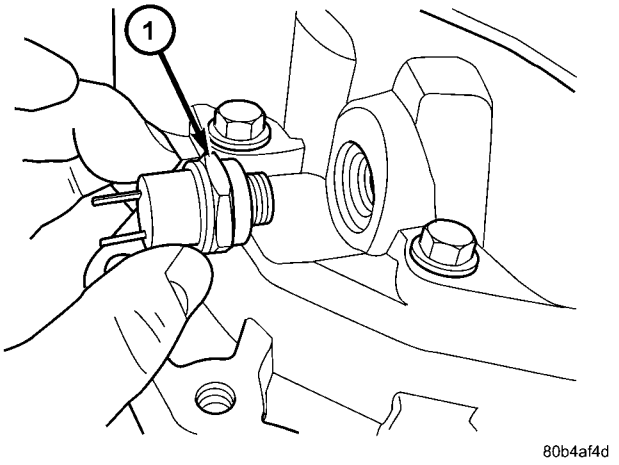

Fig. 63 Back-Up Lamp Switch

1 - BACK-UP LAMP SWITCH

INSTALLATION

(1) Install back-up lamp switch (Fig. 63) and torque to 23 N·m (17 ft. lbs.) using Tool 8827.

(2) Connect back-up lamp switch connector.

(3) Lower vehicle.

DIFFERENTIAL

DESCRIPTION

The T850 differential is a conventional open design. It consists of a ring gear and a two-piece differential case. The differential case contains the pinion and side gears, three floating pinion shafts, and a pinion shaft retaining ring (Fig. 64). The differential case is supported in the transaxle by tapered roller bearings.

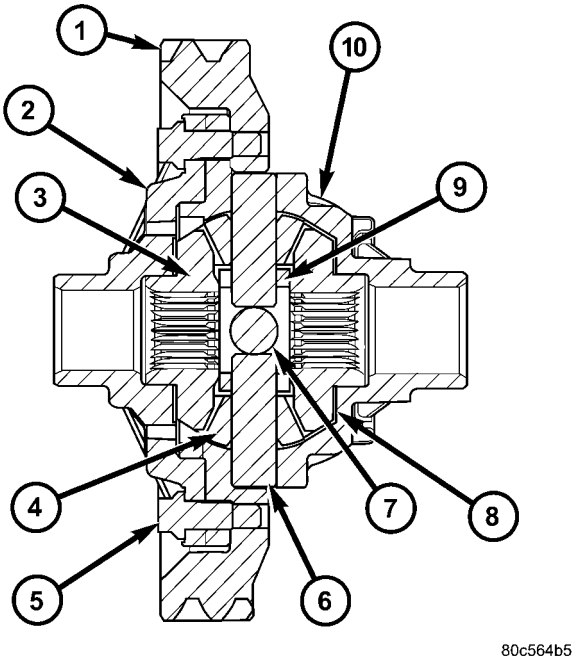

Fig. 64 Differential Assembly

1 - RING GEAR
2 - SUPPORT PLATE
3 - SIDE GEAR (2)
4 - PINION GEAR (4)
5 - BOLT (12)
6 - PINION SHAFT (2-SHORT)
7 - PINION SHAFT (1-LONG)
8 - THRUST WASHER (2)
9 - RETAINING RING
10 - DIFFERENTIAL CASE

OPERATION

The differential assembly is driven by the intermediate shaft via the ring gear. The ring gear drives the differential case, and the case drives the halfshafts through the differential gears. The differential pinion and side gears are supported in the case by pinion shafts and thrust washers. Differential pinion and side gears make it possible for front wheels to rotate at different speeds while cornering.

DISASSEMBLY

(1) Remove differential side bearings:

(a) Install button 8491-1 to differential case (Fig. 65).

(b) Set up Tool 5048 (5048-1, -4, -6) as shown in (Fig. 66).

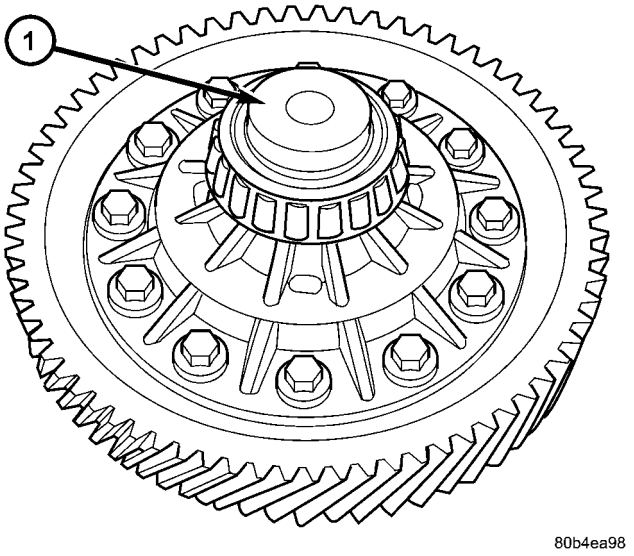

Fig. 65 Tool 8491

1 - TOOL 8491

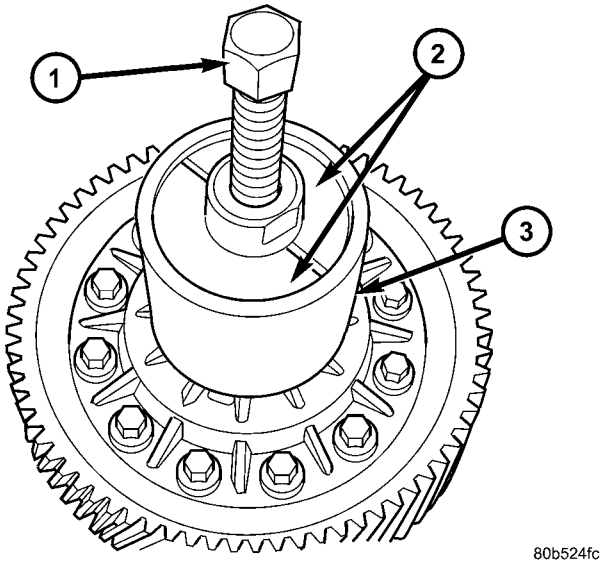

Fig. 66 Puller 5048

1 - 5048-1 FORCING SCREW
2 - 5048-4 COLLETS
3 - 5048-6 SLEEVE

DIFFERENTIAL (Continued)

(c) Remove differential side bearing (Fig. 67). Same procedure/tools work for both sides.

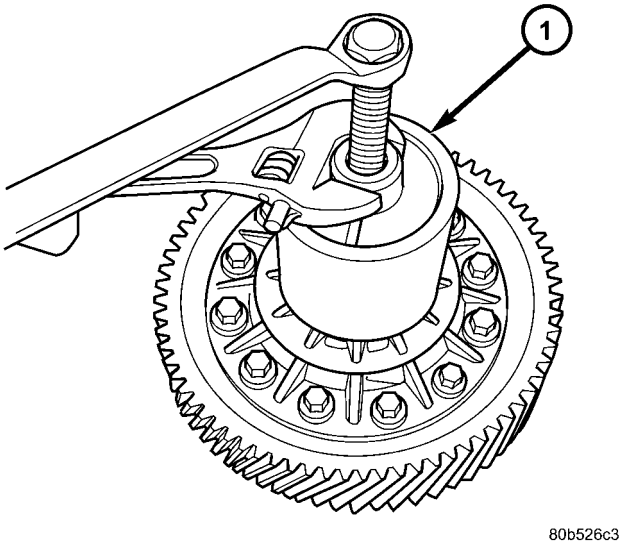

Fig. 67 Differential Side Bearing Removal

1 - TOOL 5048

(2) Remove ring gear-to-case bolts (Fig. 68) and remove ring gear.

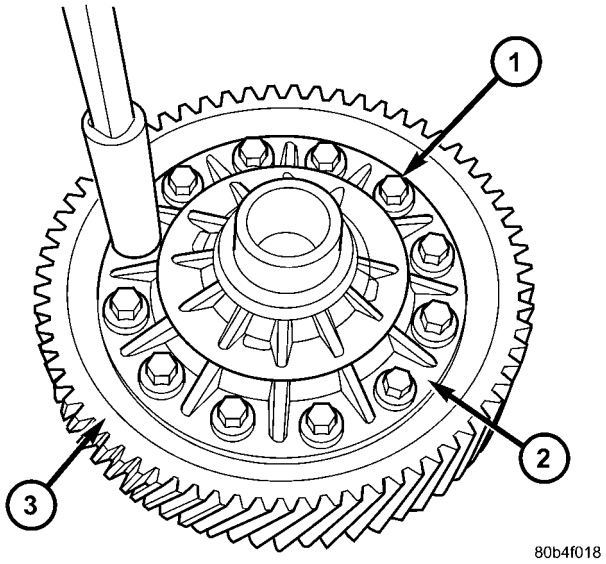

Fig. 68 Ring Gear-to-Differential Case Bolts

1 - BOLT (12)
2 - DIFFERENTIAL SUPPORT
3 - RING GEAR

(3) Using three ring gear bolts as forcing screws (Fig. 69), separate differential support from case (Fig. 70).

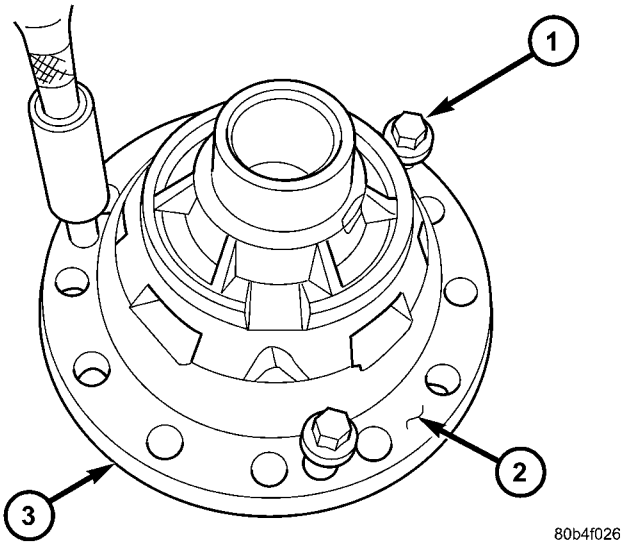

Fig. 69 Separate Differential Case Halves

1 - BOLT (3)
2 - DIFFERENTIAL CASE
3 - DIFFERENTIAL SUPPORT

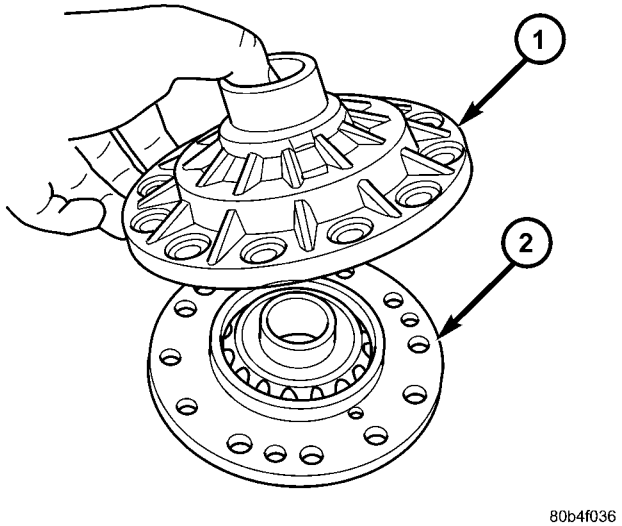

Fig. 70 Differential Support Plate

1 - DIFFERENTIAL SUPPORT PLATE
2 - DIFFERENTIAL CASE

DIFFERENTIAL (Continued)

(4) Remove side gear thrust washer (Fig. 71).

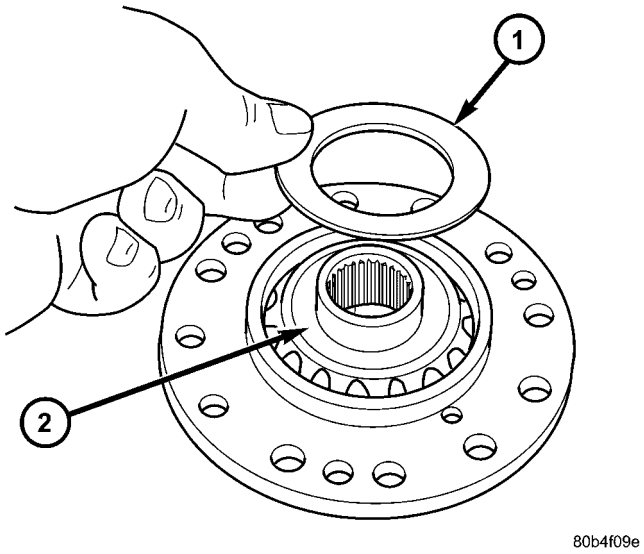

Fig. 71 Side Gear Thrust Washer

1 - SIDE GEAR THRUST WASHER
2 - DIFFERENTIAL SIDE GEAR

(5) Remove side gear (Fig. 72).

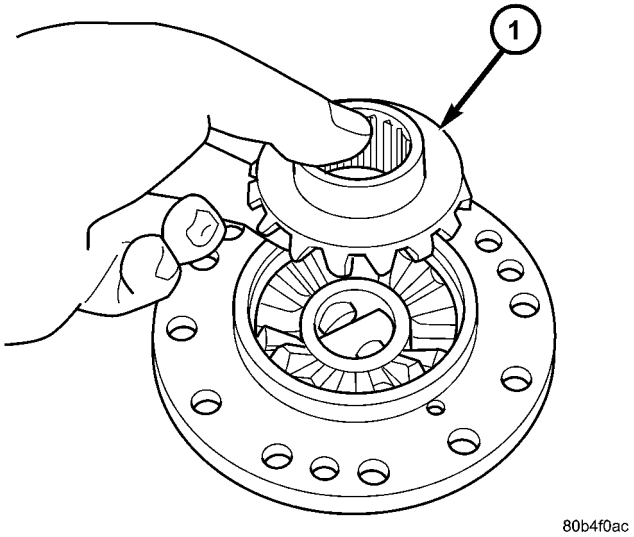

Fig. 72 Differential Side Gear

1 - DIFFERENTIAL SIDE GEAR

(6) Remove long pinion shaft (Fig. 73).

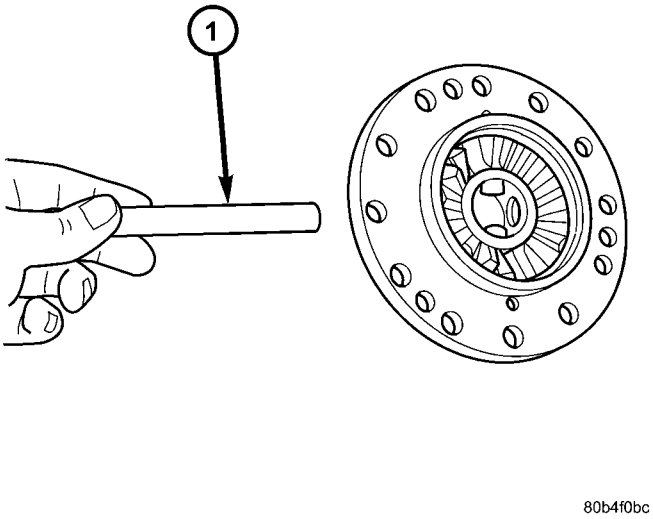

Fig. 73 Long Pinion Shaft

1 - PINION SHAFT (LONG)

(7) Remove both short pinion shafts (Fig. 74).

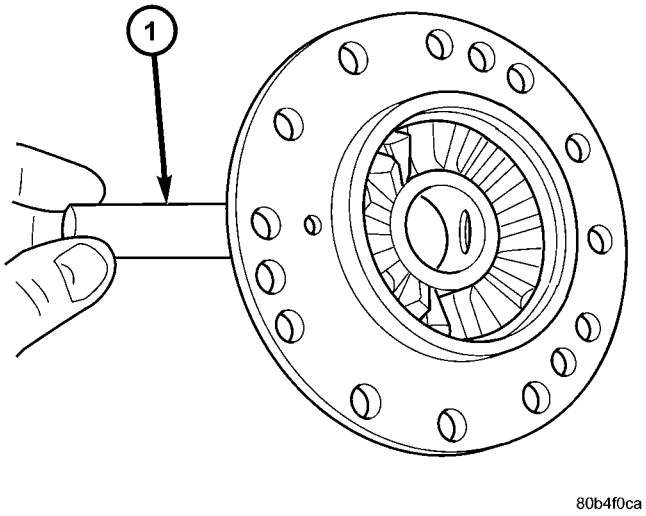

Fig. 74 Short Pinion Shaft (2)

1 - PINION SHAFT (SHORT (2))

DIFFERENTIAL (Continued)

(8) Remove pinion shaft retainer (Fig. 75).

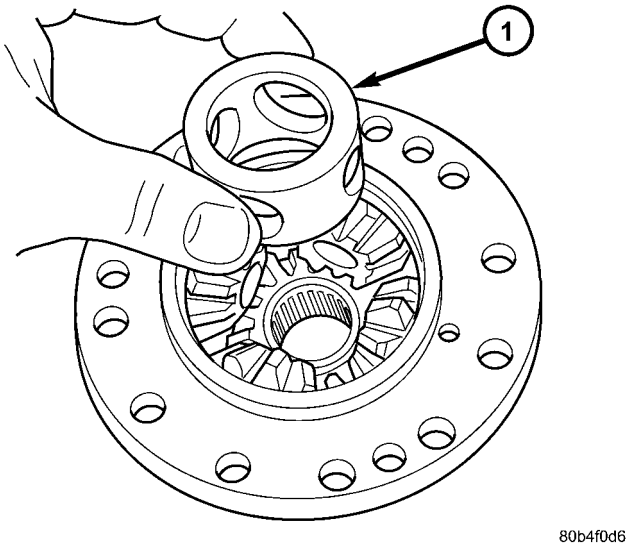

Fig. 75 Pinion Shaft Retaining Ring

1 - RETAINING RING

(9) Remove four pinion gears and thrust washers (Fig. 76).

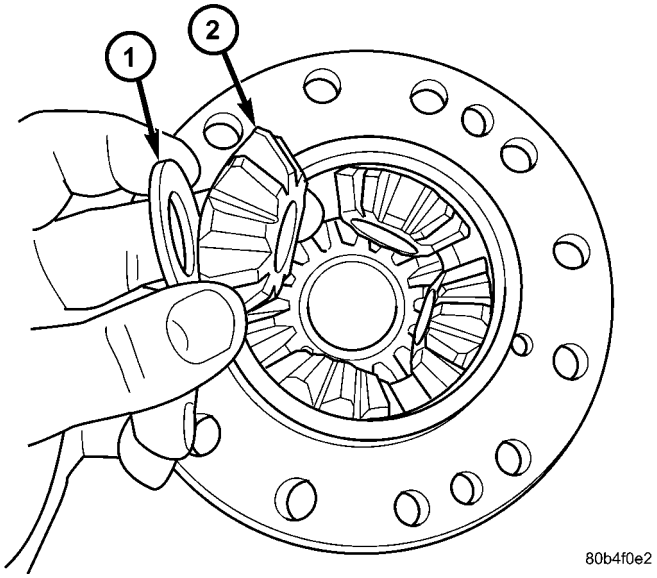

Fig. 76 Pinion Gear and Thrust Washer

1 - THRUST WASHER (4)
2 - PINION GEAR (4)

(10) Remove side gear (Fig. 77).

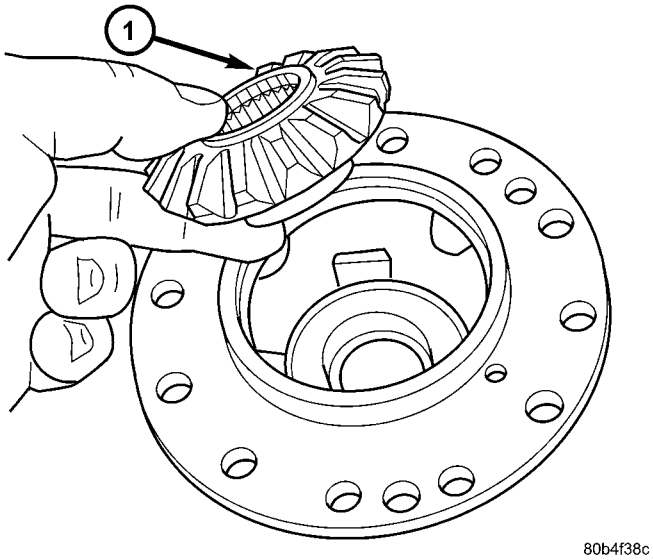

Fig. 77 Differential Side Gear

1 - DIFFERENTIAL SIDE GEAR

(11) Remove side gear thrust washer (Fig. 78).

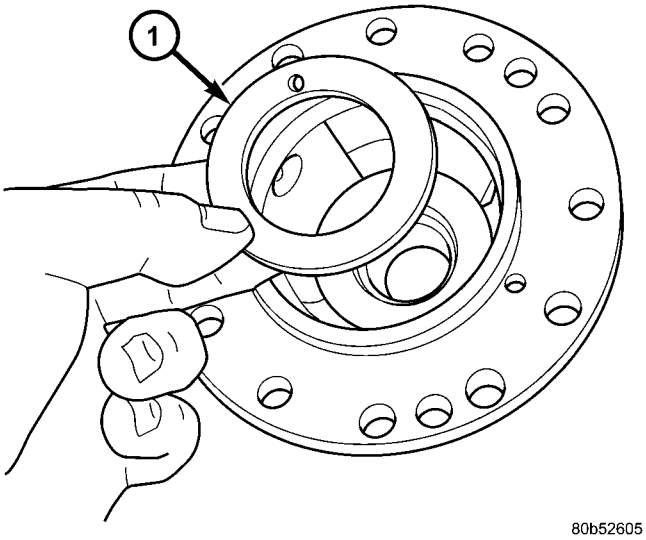

Fig. 78 Side Gear Thrust Washer

1 - SIDE GEAR THRUST WASHER

DIFFERENTIAL (Continued)

ASSEMBLY

(1) Install side gear thrust washer (Fig. 79).

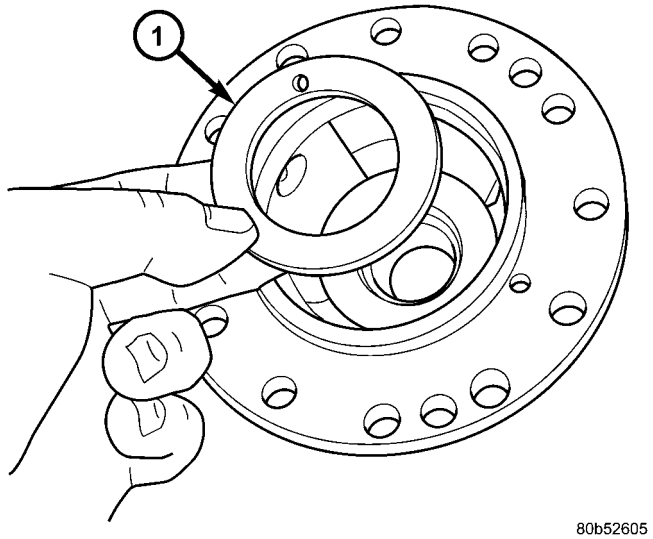

Fig. 79 Side Gear Thrust Washer

1 - SIDE GEAR THRUST WASHER

(2) Install differential side gear (Fig. 80).

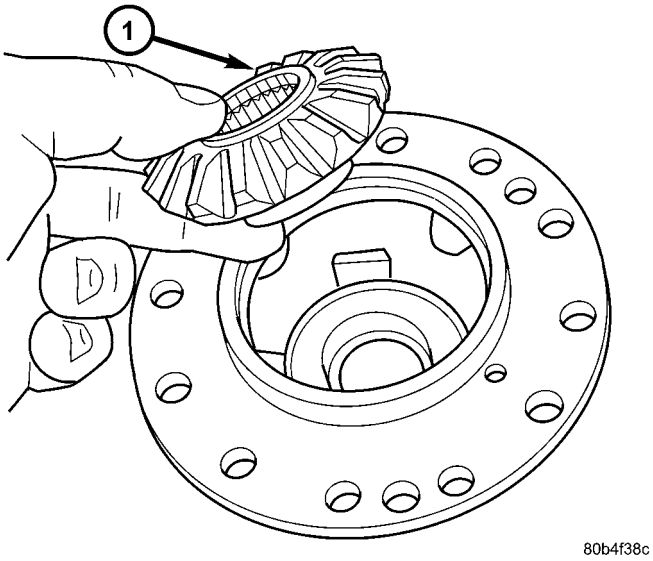

Fig. 80 Differential Side Gear

1 - DIFFERENTIAL SIDE GEAR

(3) Install four (4) pinion gears and thrust washers (Fig. 81).

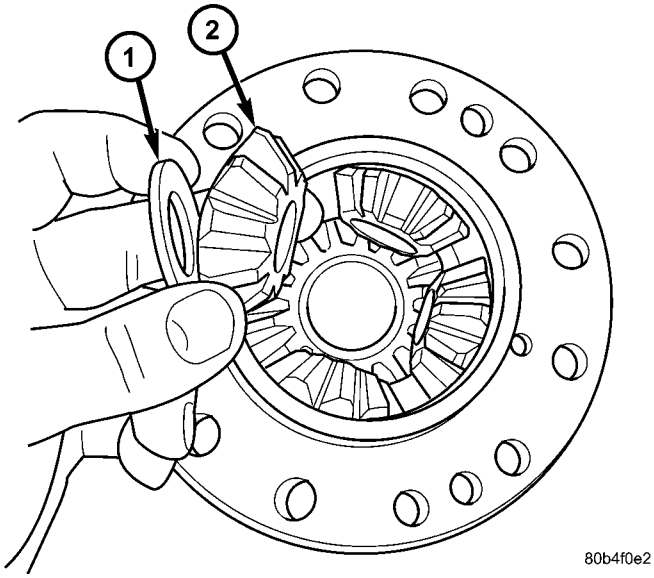

Fig. 81 Pinion Gear and Thrust Washer

1 - THRUST WASHER (4)
2 - PINION GEAR (4)

(4) Install pinion shaft retaining ring (Fig. 82).

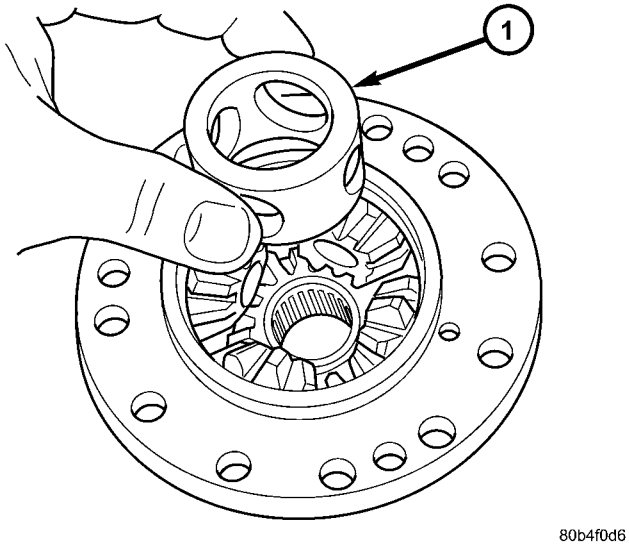

Fig. 82 Pinion Shaft Retaining Ring

1 - RETAINING RING

DIFFERENTIAL (Continued)

(5) Install two (2) short pinion shafts (Fig. 83).

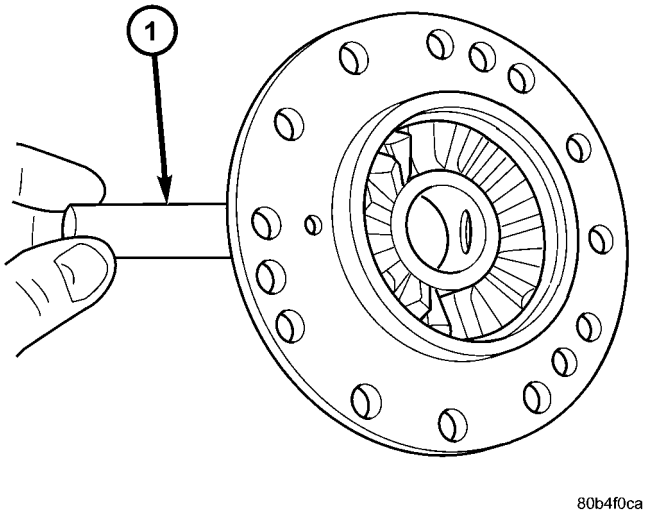

Fig. 83 Short Pinion Shaft (2)

1 - PINION SHAFT (SHORT (2))

(6) Install one (1) long pinion shaft (Fig. 84).

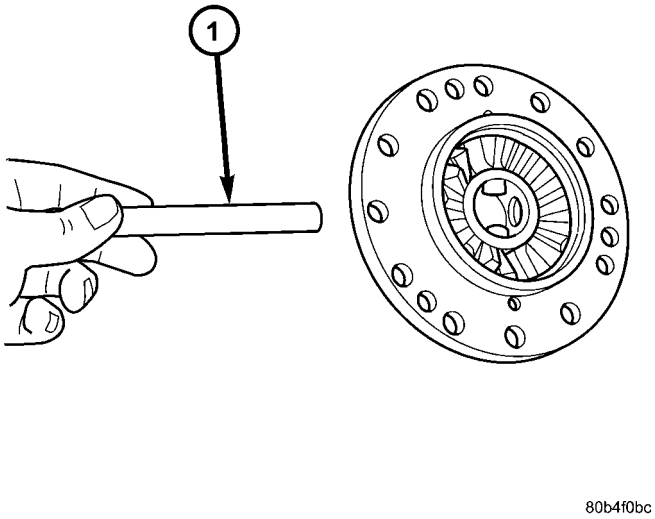

Fig. 84 Long Pinion Shaft

1 - PINION SHAFT (LONG)

(7) Install differential side gear.

(8) Install side gear thrust washer (Fig. 85).

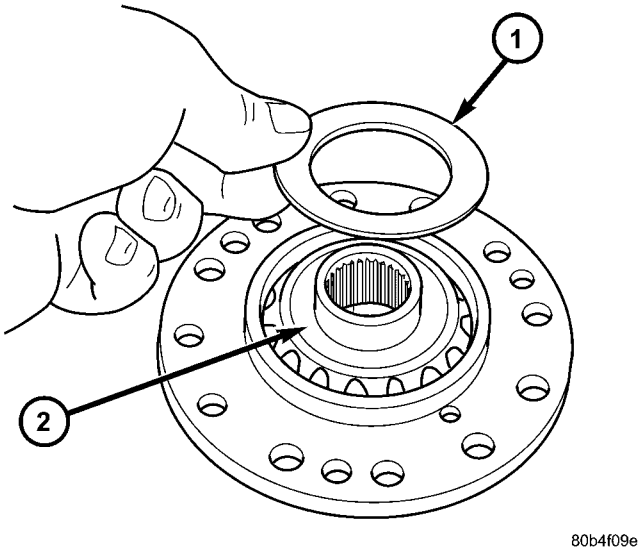

Fig. 85 Side Gear Thrust Washer

1 - SIDE GEAR THRUST WASHER
2 - DIFFERENTIAL SIDE GEAR

(9) Install differential support plate. Align support plate to differential case with alignment pins 8470 (Fig. 86).

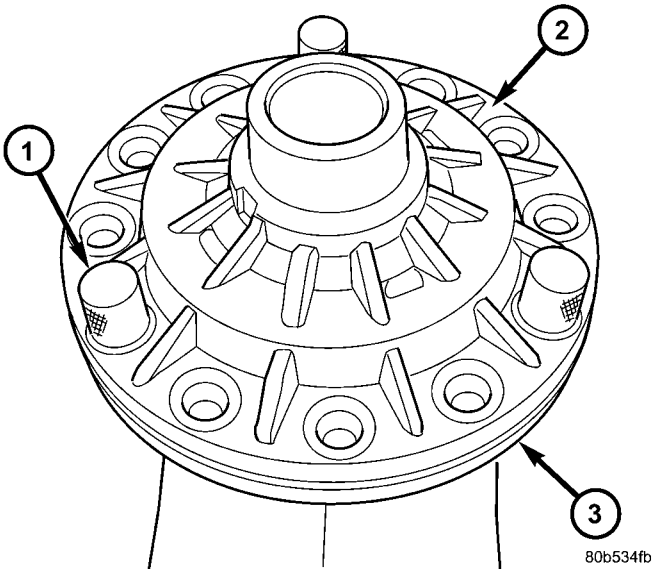

Fig. 86 Align Differential Support to Case

1 - ALIGNMENT PIN 8470
2 - DIFFERENTIAL SUPPORT PLATE
3 - DIFFERENTIAL CASE

DIFFERENTIAL (Continued)

(10) Install thrust buttons 8491 to both bearing journals and press halves together using an arbor press (Fig. 87).

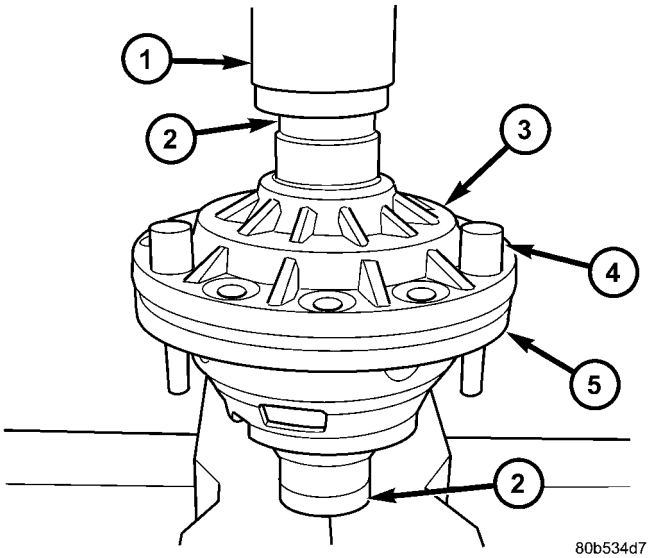

Fig. 87 Installing Differential Support

1 - ARBOR PRESS
2 - BUTTON 8491
3 - DIFFERENTIAL SUPPORT PLATE
4 - ALIGNMENT PIN 8470
5 - DIFFERENTIAL CASE

(11) Install ring gear into position, start three ring gear-to-differential case bolts by hand (120° apart), and install alignment pins 8470 (Fig. 88).

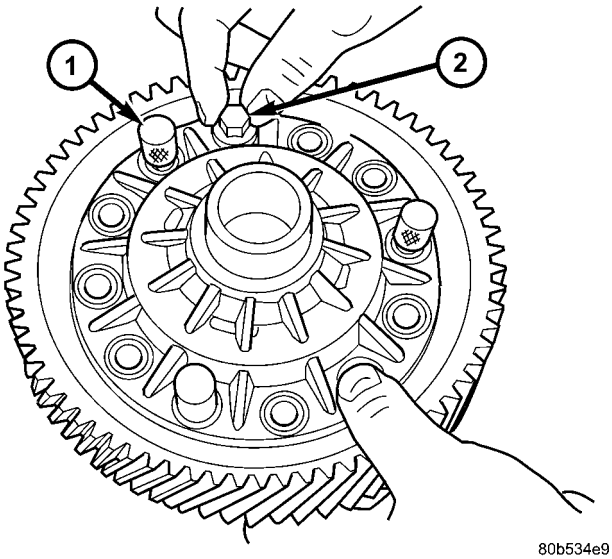

Fig. 88 Ring Gear Alignment/Installation

1 - ALIGNMENT PIN 8470
2 - BOLT

(12) Torque three ring gear bolts to draw ring gear into position. Remove alignment pins, install remaining ring gear-to-differential case bolts and torque to 95 N·m (70 ft. lbs.) (Fig. 89).

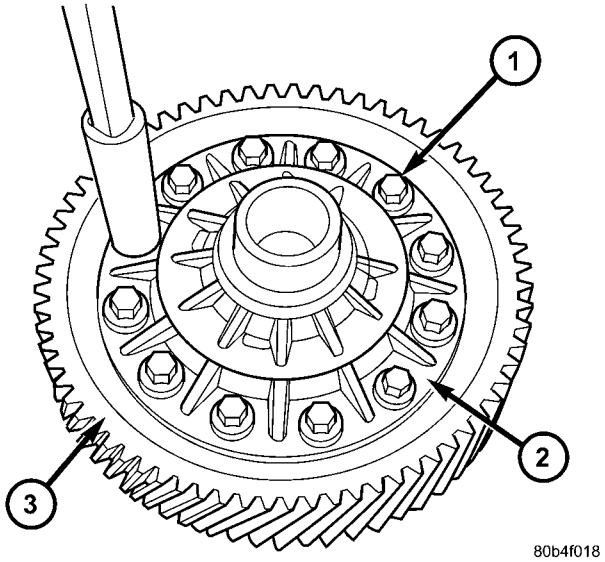

Fig. 89 Ring Gear-to-Differential Case Bolts

1 - BOLT (12)
2 - DIFFERENTIAL SUPPORT
3 - RING GEAR

(13) Install tapered roller bearings using installer 8473 and an arbor press (Fig. 90). Insert button 8491 on opposite journal to protect journal and/or bearing during press operation. Repeat the same operation on opposite side.

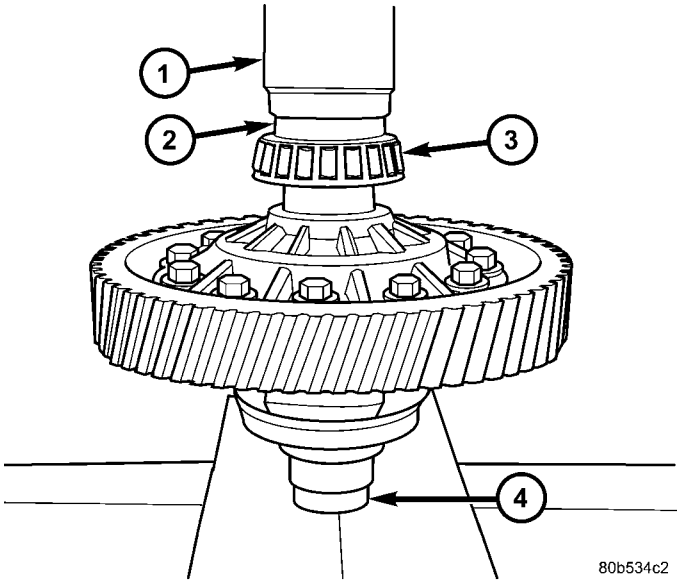

Fig. 90 Differential Side Bearing Installation

1 - ARBOR PRESS
2 - INSTALLER 8473
3 - BEARING
4 - BUTTON 8491

DIFFERENTIAL (Continued)

(14) Measure and verify differential side gear end play. (Refer to 21 - TRANSMISSION/TRANSAXLE/MANUAL/DIFFERENTIAL - ADJUSTMENTS).

ADJUSTMENTS

ADJUSTMENT - DIFFERENTIAL TURNING TORQUE

NOTE: Differential turning torque should only be measured with the geartrain out of the transaxle. If measurement is taken with transaxle assembled, an inaccurate measurement will result.

NOTE: All differential cover-to-case bolts and bearing plate-to-case bolts must be installed and torqued to obtain accurate measurement.

(1) If transaxle is assembled, remove geartrain and leave differential in place. (Refer to 21 - TRANSMISSION/TRANSAXLE/MANUAL - DISASSEMBLY)

(2) Install differential cover and torque differential cover-to-case bolts to 54 N·m (40 ft. lbs.).

(3) Install extension housing and torque extension housing-to-case bolts to 28 N·m (250 in. lbs.).

(4) Place transaxle on work bench so axle centerline is parallel to the ground.

(5) Install turning torque tool C-4995 to differential at side opposite extension housing.

(6) Using in. lb./N·m dial indicator, rotate differential case multiple times and record measurement (Fig. 91). Differential turning torque should be within 2.3-3.4 N·m (20-30 in. lbs.). Refer to shim chart for proper shim selection. If turning torque measured is less than 2.3 N·m (20 in. lbs.), install a thicker shim. If turning torque measured is greater than 3.4 N·m (30 in. lbs.), install a thinner shim.

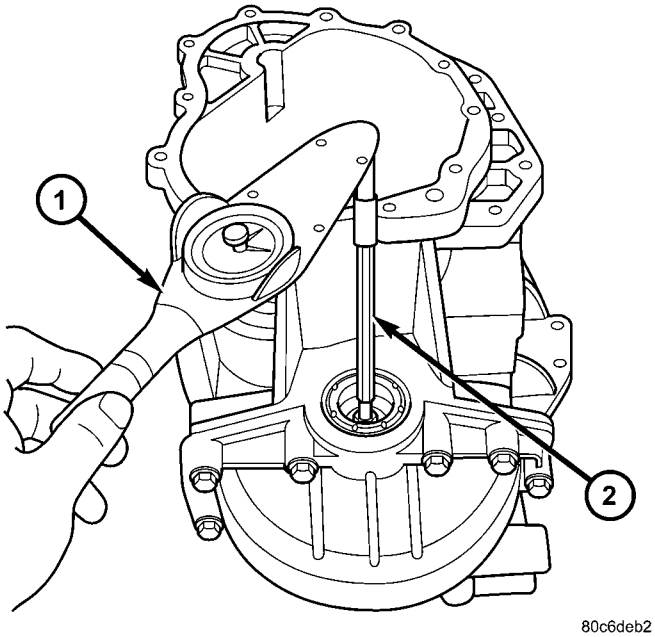

Fig. 91 Differential Turning Torque Measurement

1 - DIAL TORQUE WRENCH
2 - TOOL C-4995

DIFFERENTIAL (Continued)

DIFFERENTIAL BEARING SHIM CHART

PART NUMBER	SHIM THICKNESS	
	METRIC (MM)	STANDARD (STD)
4659242	0.50	0.0197
4659243	0.54	0.0213
4659247	0.58	0.0228
4659248	0.62	0.0244
4659249	0.66	0.0260
4659250	0.70	0.0276
4659251	0.74	0.0291
4659252	0.78	0.0307
4659253	0.82	0.0322
4659254	0.86	0.0339
4659255	0.90	0.0354
4659256	0.94	0.0370
4659257	0.98	0.0386
4659258	1.02	0.0402
4659259	1.06	0.0418
4659260	1.10	0.0434
4659261	1.14	0.0449
4659262	1.18	0.0465
4659263	1.22	0.0481
4659264	1.26	0.0497
4659265	1.30	0.0512
4659266	1.34	0.0528
4659267	1.38	0.0544
4659268	1.42	0.0560
4659269	1.46	0.0575
4659270	1.50	0.0591
4659271	1.54	0.0607
4659272	1.58	0.0623
4659273	1.62	0.0638
4659274	1.66	0.0654
4659275	1.70	0.0670
4659283	2.02	0.0796
4659284	2.06	0.0812

DIFFERENTIAL (Continued)

ADJUSTMENT - DIFFERENTIAL SIDE GEAR END PLAY

Measure side gear end play: Insert feeler gauges 180° apart between differential side gear and thrust washer as shown in (Fig. 92). Measurement taken here applies to both sides. Side gear end play should be between 0.025-0.152 mm (0.001-0.006 in.). If clearance is greater than 0.152 mm (0.006 in.), install a thicker thrust washer (both sides). If clearance is less than 0.025 mm (0.001), install a thinner thrust washer (both sides). Refer to (Fig. 93) for available side gear shim thicknesses.

If end play measurement indicates a thrust washer change is necessary, the differential must be disassembled. (Refer to 21 - TRANSMISSION/TRANSAXLE/MANUAL/DIFFERENTIAL - DISASSEMBLY)

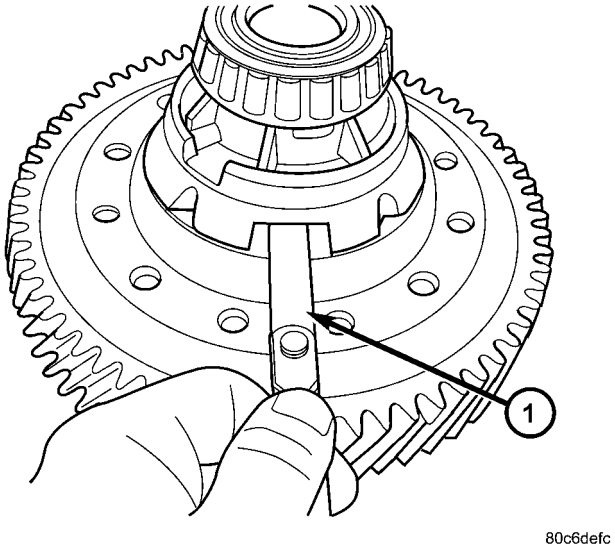

Fig. 92 Side Gear End Play Measurement

1 - FEELER GAUGE

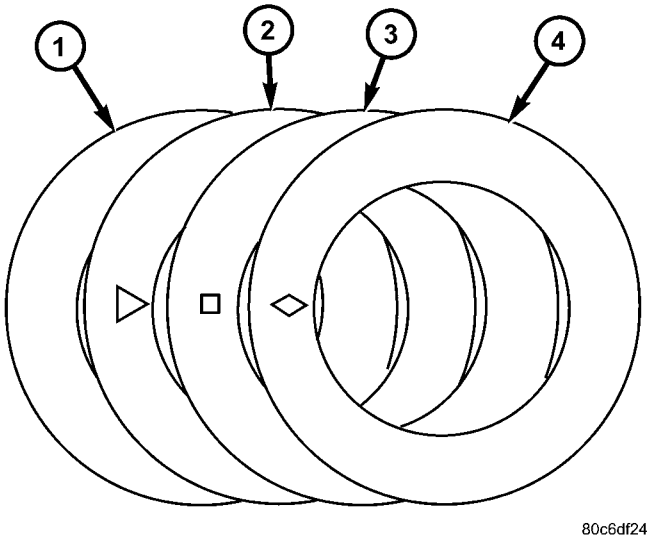

Fig. 93 Available Side Gear Thrust Washers

1 - (PLAIN) 0.79-0.84 mm (0.031-0.033 in.)
2 - (TRIANGLE) 0.91-0.97 mm (0.036-0.038 in.)
3 - (SQUARE) 1.04-1.10 mm (0.041-0.043 in.)
4 - (DIAMOND) 1.17-1.22 mm (0.046-0.048 in.)

FLUID

STANDARD PROCEDURE

STANDARD PROCEDURE - FLUID LEVEL CHECK

NOTE: For proper fluid level check intervals, (Refer to LUBRICATION & MAINTENANCE/MAINTENANCE SCHEDULES - DESCRIPTION)

The fluid required in this transaxle is Mopar® ATF+4. Use of substitute fluids may result in improper transaxle operation and/or failure.

(1) Raise vehicle on hoist.
(2) Remove transaxle fill plug (Fig. 94).

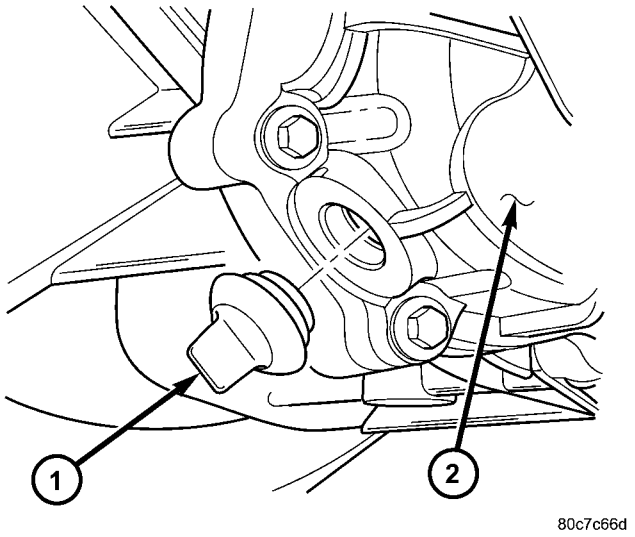

Fig. 94 Transaxle Fill Plug

1 - FILL PLUG
2 - END COVER

(3) Inspect fluid level. Fluid should be within 3/16” below fill hole. Add Mopar® ATF+4 as neccessary.
(4) Install fill plug, ensuring it is properly seated.
(5) Lower vehicle.

FLUID (Continued)

STANDARD PROCEDURE - FLUID DRAIN AND FILL

NOTE: For proper fluid change intervals, (Refer to LUBRICATION & MAINTENANCE/MAINTENANCE SCHEDULES - DESCRIPTION)

The fluid required in this transaxle is Mopar® ATF+4. Use of substitute fluids may result in improper transaxle operation and/or failure.

FLUID DRAIN

(1) Raise vehicle on hoist.
(2) Remove transaxle drain plug (Fig. 95) and drain fluid into suitable container.
(3) Install drain plug and torque to 23 N·m (17 ft. lbs.).

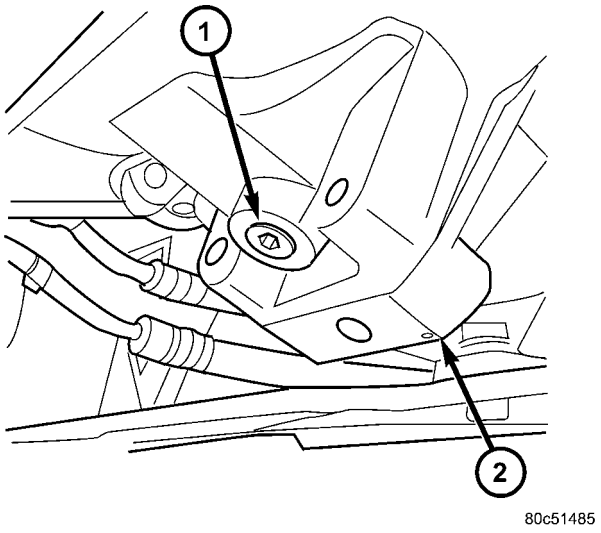

Fig. 95 Transaxle Drain Plug

1 - TRANSAXLE DRAIN PLUG
2 - DIFFERENTIAL COVER

FLUID FILL

(1) Remove transaxle fill plug (Fig. 96).
(2) Add 2.4-2.7L (2.5-2.9 qts.) of Mopar® ATF+4 until fluid is within 3/16” below fill hole.
(3) Install fill plug, ensuring it is properly seated.
(4) Lower vehicle.

GEAR SHIFT CABLE

REMOVAL

(1) Disconnect battery negative cable.
(2) Remove gearshift knob/boot assembly. Lift boot off of console and disengage knob retainers to free.
(3) Remove center console assembly (Fig. 97).

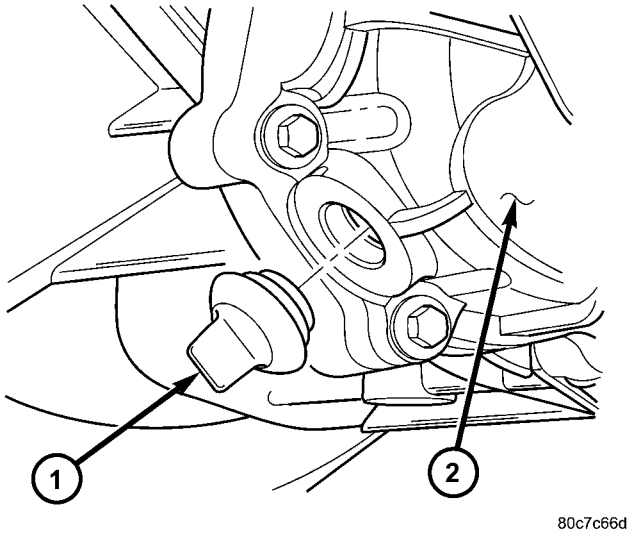

Fig. 96 Transaxle Fill Plug

1 - FILL PLUG
2 - END COVER

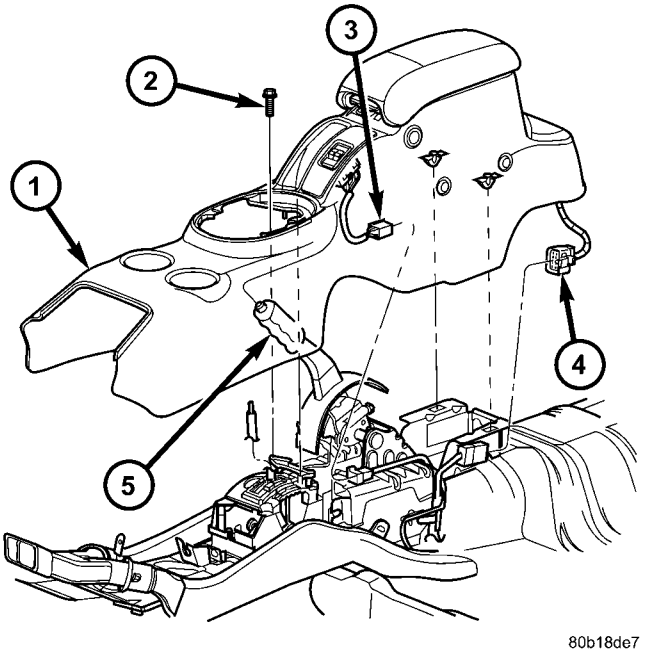

Fig. 97 Center Console Assembly—Typical

1 - CENTER CONSOLE
2 - SCREW
3 - IF EQUIPPED
4 - IF EQUIPPED
5 - PARK BRAKE HANDLE

(4) Disconnect crossover and selector cables from shift mechanism.

GEAR SHIFT CABLE (Continued)

(5) Remove crossover and selector cable retaining clips (Fig. 98) from shift mechanism and disconnect cables.

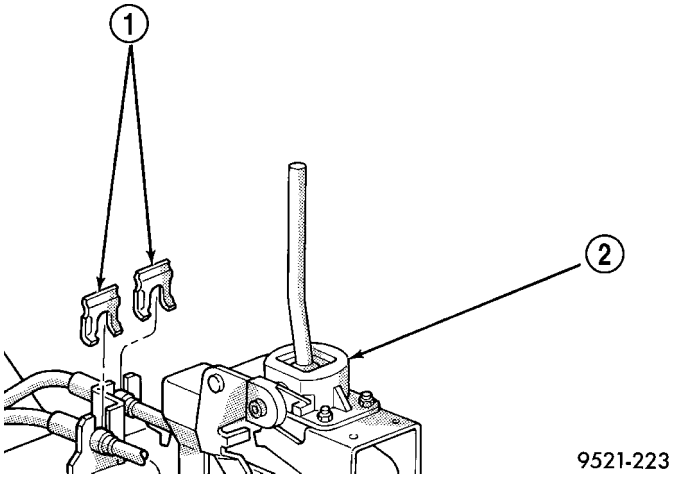

Fig. 98 Cable Retaining Clips

1 - CABLE CLIPS
2 - SHIFTER

(6) Remove air cleaner assembly.

(7) Disconnect crossover and selector cables from transaxle (Fig. 99).

(8) Remove retainer clips and disengage cables from bracket (Fig. 99).

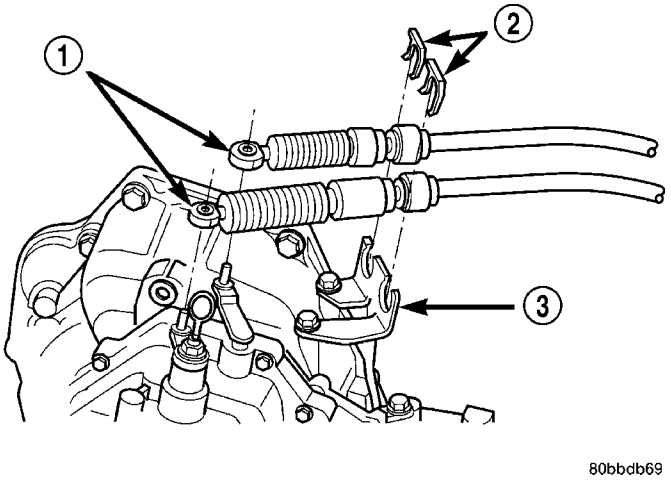

Fig. 99 Shift Cables at Transaxle

1 - SHIFT CABLES
2 - CLIPS
3 - BRACKET

(9) Raise vehicle on hoist.

(10) Remove cable grommet from floor pan.

(11) Pull cables forward and remove from under vehicle.

INSTALLATION

(1) Install gearshift cable assembly into engine compartment from under vehicle.

(2) Feed cable assembly through hole in floor pan and secure grommet to floor pan.

(3) Lower vehicle.

(4) Install gearshift cables to mounting bracket (Fig. 99). Secure with new clips.

(5) Connect gearshift cables to transaxle crossover and selector levers (Fig. 99).

(6) Install air cleaner assembly.

(7) Connect crossover and selector cables to mechanism and secure with clips (Fig. 98).

NOTE: Only the crossover cable is adjustable. The selector cable does not have any adjustment capabilities.

(8) **Adjust crossover cable as follows:**

(a) Loosen adjusting screw on crossover cable at shifter (Fig. 100).

(b) The gearshift mechanism and transaxle crossover lever are spring-loaded and self-centering. Alignment pins used in the past are not required anymore. Allow gearshift mechanism and transaxle crossover lever to relax in their neutral positions. To ensure the gearshift lever is in the proper position, place the shifter in 3rd or 4th gear if necessary. Torque adjustment screw to 8 N·m (70 in. lbs.). Care must be taken to avoid moving the shift mechanism off-center during screw tightening.

(c) Perform functional check by shifting transaxle into all gears.

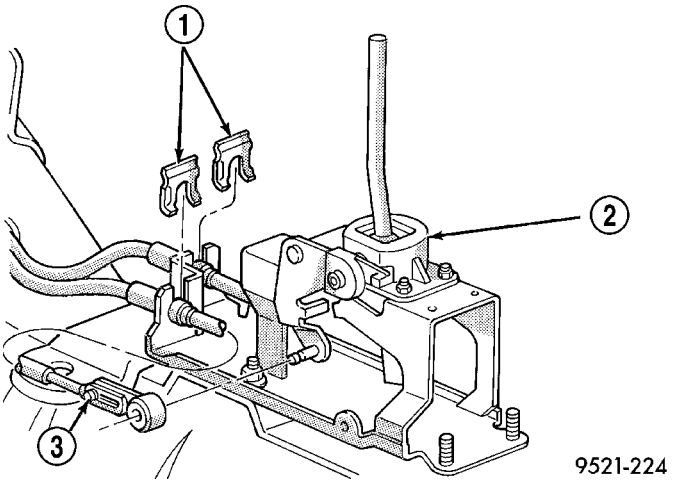

Fig. 100 Crossover and Selector Cables at Shift Mechanism

1 - CABLE CLIPS
2 - SHIFTER
3 - ADJUSTMENT SCREW

(9) Install center console assembly (Fig. 97).

(10) Install gearshift knob/boot assembly. Ensure knob retaining tabs are secured to shift lever. Snap boot to console at retainer locations.

GEAR SHIFT MECHANISM

REMOVAL

(1) Disconnect battery negative cable.
(2) Remove gearshift knob/boot assembly.
(3) Remove center console assembly (Fig. 101).

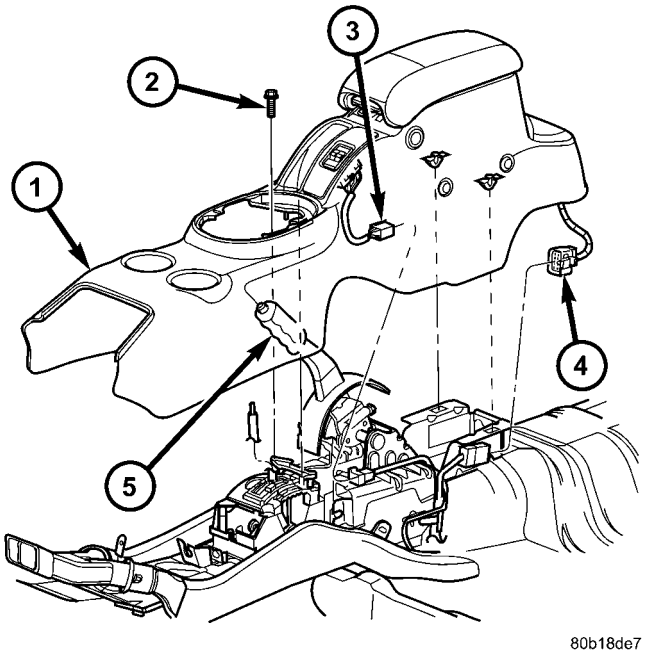

Fig. 101 Center Console Assembly—Typical

1 - CENTER CONSOLE
2 - SCREW
3 - IF EQUIPPED
4 - IF EQUIPPED
5 - PARK BRAKE HANDLE

(4) Disconnect crossover cable from mechanism.
(5) Disconnect selector cable from mechanism.
(6) Remove crossover and selector cable retaining clips (Fig. 102) from mechanism and disconnect cables.

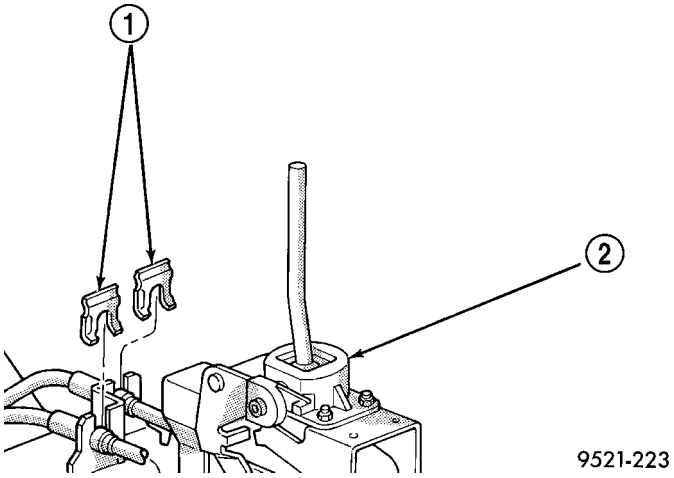

Fig. 102 Cable Retaining Clips

1 - CABLE CLIPS
2 - SHIFTER

(7) Remove shift mechanism-to-floor pan bolts and remove mechanism (Fig. 103).

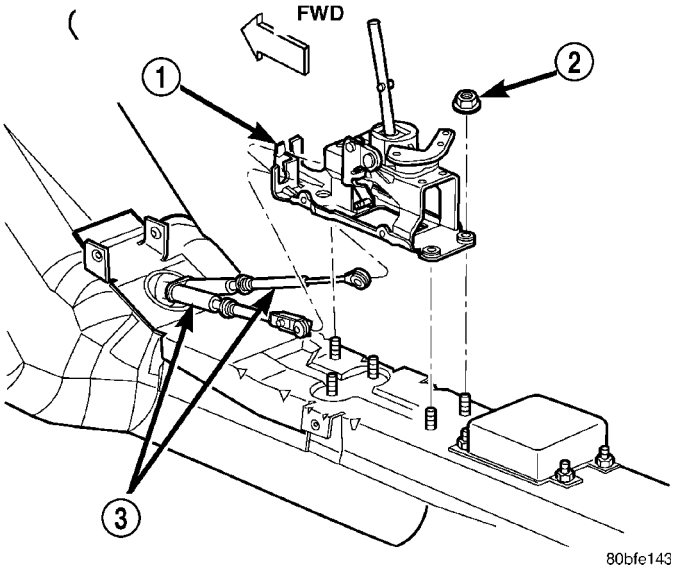

Fig. 103 Gearshift Mechanism

1 - GEARSHIFT MECHANISM
2 - NUT (5)
3 - GEARSHIFT CABLES

INSTALLATION

(1) Install gear shift mechanism to floor pan (Fig. 103). Install and torque four (4) nuts to 25 N·m (18 ft. lbs.).

(2) Install crossover and selector cables into position. Secure with retaining clips (Fig. 104).

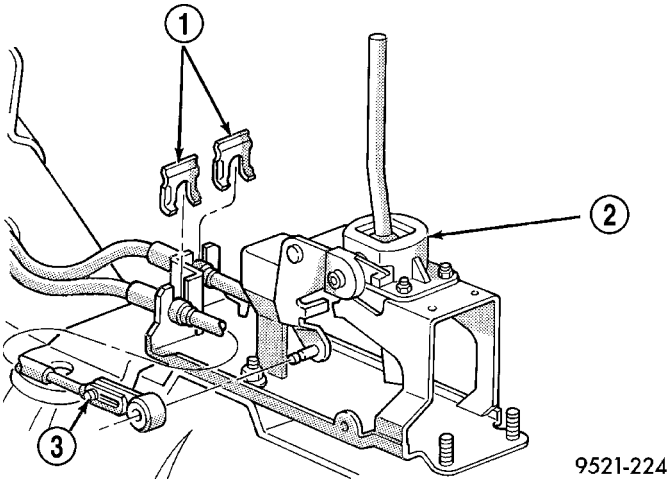

Fig. 104 Crossover and Selector Cables at Shift Mechanism

1 - CABLE CLIPS
2 - SHIFTER
3 - ADJUSTMENT SCREW

NOTE: Only the crossover cable is adjustable. The selector cable does not have any adjustment capabilities.

GEAR SHIFT MECHANISM (Continued)

(3) **Adjust crossover cable as follows:**

(a) Loosen adjusting screw on crossover cable at shifter (Fig. 104).

(b) The gearshift mechanism and transaxle crossover lever are spring-loaded and self-centering. Alignment pins used in the past are not required anymore. Allow gearshift mechanism and transaxle crossover lever to relax in their neutral positions. To ensure the gearshift lever is in the proper position, place the shifter in 3rd or 4th gear if necessary. Torque adjustment screw to 8 N·m (70 in. lbs.). Care must be taken to avoid moving the shift mechanism off-center during screw tightening.

(c) Perform functional check by shifting transaxle into all gears.

(4) Install center console assembly (Fig. 101).

(5) Install gearshift knob/boot assembly. Ensure knob retaining tabs are secured to shift lever. Snap boot to console at retainer locations.

INPUT SHAFT

DESCRIPTION

The input shaft assembly (Fig. 105) is part of the transaxle geartrain, is driven by the clutch assembly, and consists of the following components:

- Input Mainshaft
- 3rd Speed Gear
- 4th Speed Gear
- 3/4 Synchronizer
- 5th Input Gear

The input shaft meshes with the intermediate shaft, and is supported by a needle bearing at the front of the transaxle, and a sealed roller bearing at the rear of the transaxle.

DISASSEMBLY

NOTE: When servicing the input shaft assembly, all snap rings which are removed MUST be replaced with new snap rings upon reassembly. The 5th gear nut must be replaced also.

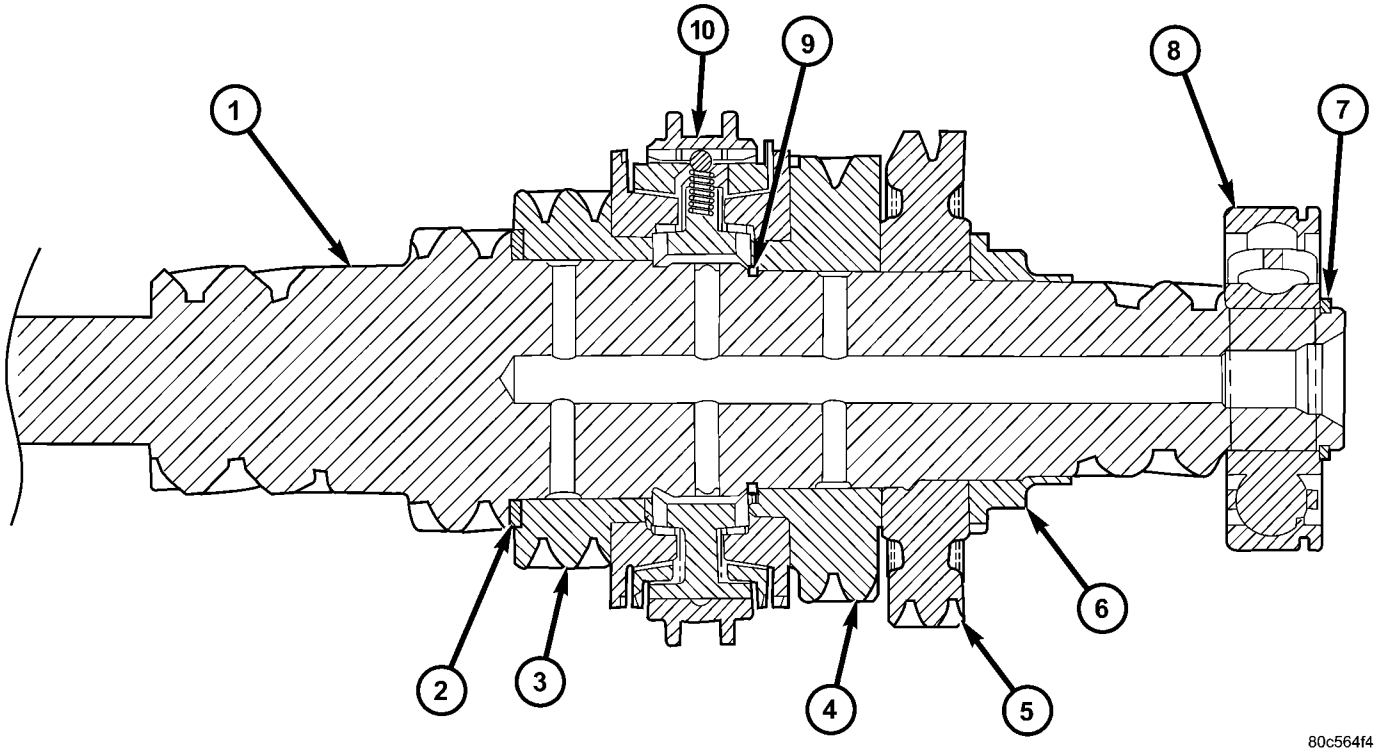

Fig. 105 Input Shaft Assembly

1 - INPUT SHAFT
2 - THRUST WASHER
3 - 3RD GEAR
4 - 4TH GEAR
5 - 5TH GEAR
6 - 5TH GEAR NUT
7 - SNAP RING
8 - INPUT BEARING (SEALED)
9 - SNAP RING
10 - 3/4 SYNCHRONIZER

INPUT SHAFT (Continued)

NOTE: Depending on the date of transaxle manufacture, some input shafts will utilize a needle bearing under the 3rd and 4th Speed Gears.

(1) Invert input shaft assembly and place in fixture 8487.

(2) Remove input bearing snap ring (Fig. 106).

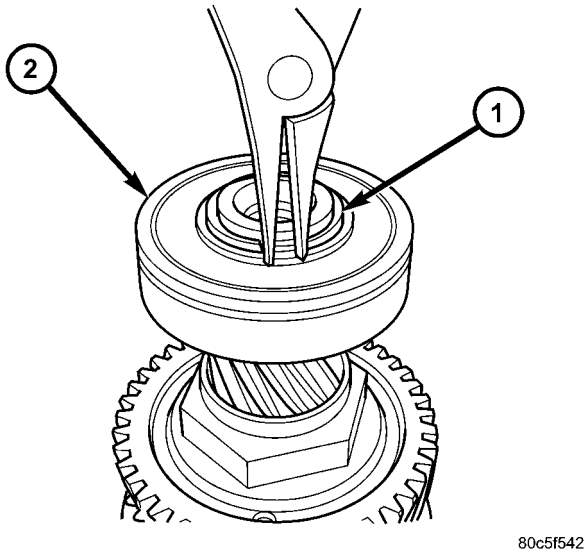

Fig. 106 Input Bearing Snap Ring Removal

1 - SNAP RING
2 - INPUT BEARING

(3) Remove input bearing. Place input shaft assembly onto arbor press table, with the input bearing supported by bearing splitter (Fig. 107). Using adapter 8486-4, press bearing off of shaft, while helper supports shaft to prevent dropping.

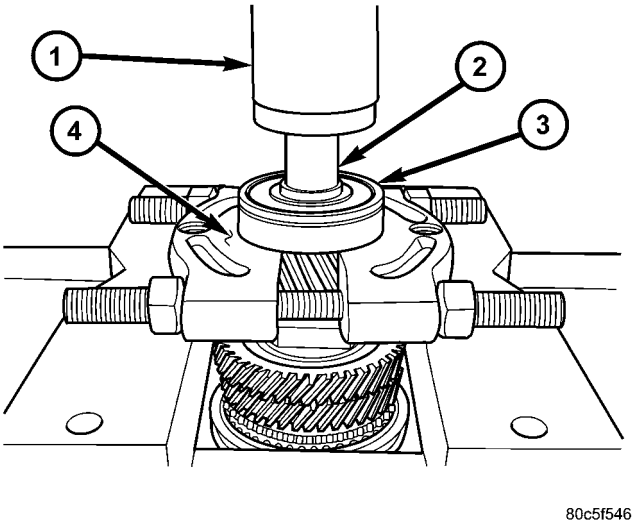

Fig. 107 Input Bearing Removal

1 - ARBOR PRESS RAM
2 - ADAPTER 8486-4
3 - INPUT BEARING
4 - BEARING SPLITTER

(4) Place input shaft assembly back into fixture 8487. Secure fixture to bench with fasteners, or secure to bench vise.

NOTE: 5th gear nut is staked to the shaft. If necessary, grind stake area to ease removal, but use care not to contact gear.

(5) Remove 5th gear nut with wrench 8478 (Fig. 108). Discard nut and use a new one upon assembly.

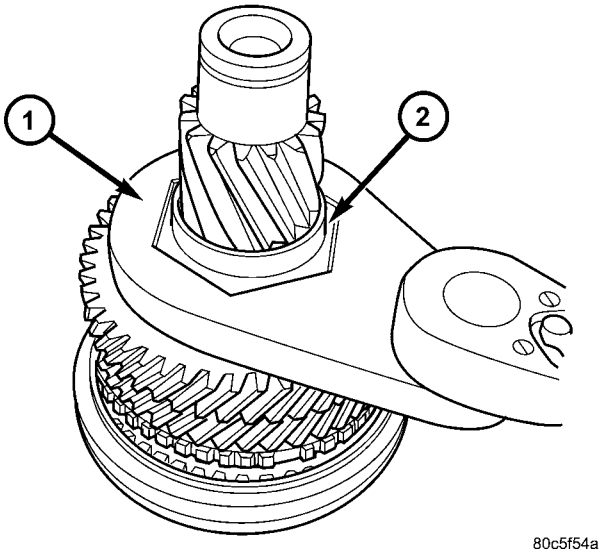

Fig. 108 5th Gear Nut Removal/Installation

1 - WRENCH 8478
2 - 5TH GEAR NUT

(6) Remove 5th gear with arbor press and bearing splitter.

(7) Remove 4th gear and needle bearing (if equipped) (Fig. 109).

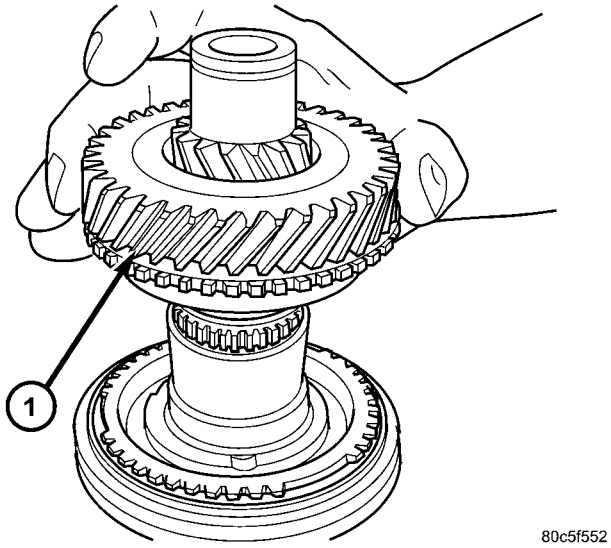

Fig. 109 4th Gear Removal/Installation

1 - 4th GEAR

INPUT SHAFT (Continued)

(8) Remove 4th gear blocker ring (Fig. 110).

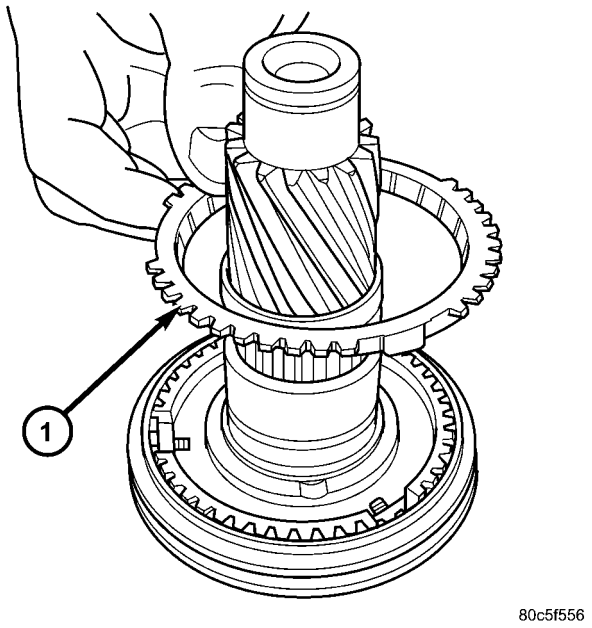

Fig. 110 4th Gear Blocker Ring

1 - 4th GEAR BLOCKER RING

(9) Remove 3/4 synchronizer snap ring (Fig. 111). Discard and replace with new snap ring upon assembly.

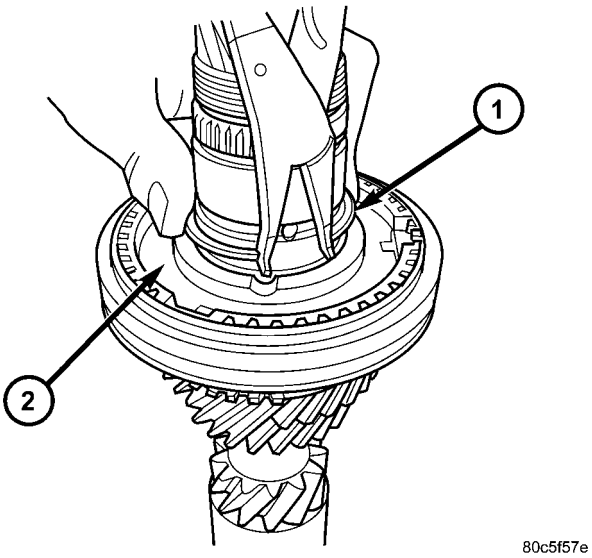

Fig. 111 3/4 Synchro Snap Ring

1 - SNAP RING
2 - 3/4 SYNCHRONIZER

(10) Remove 3/4 synchronizer (Fig. 112).

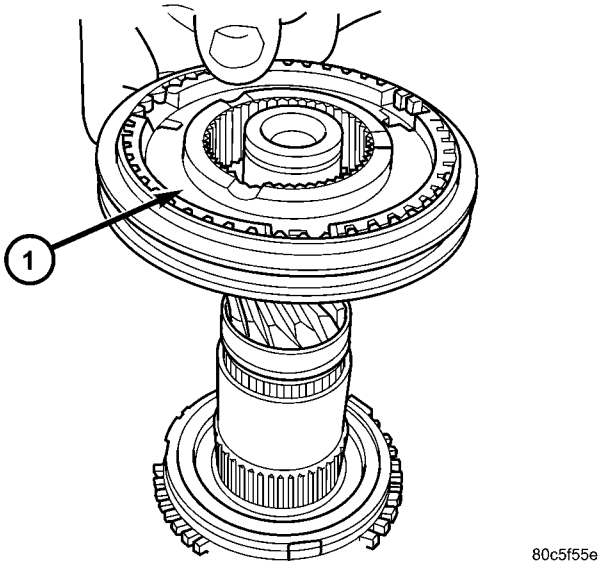

Fig. 112 3/4 Synchro Assembly

1 - 3/4 SYNCHRONIZER

(11) Remove 3rd gear blocker ring (Fig. 113).

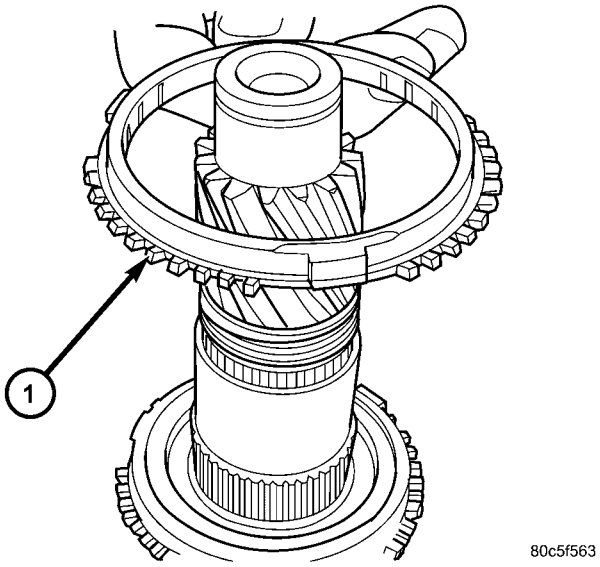

Fig. 113 3rd Gear Blocker Ring

1 - 3RD GEAR BLOCKER RING

INPUT SHAFT (Continued)

(12) Remove 3rd gear and needle bearing (if equipped) (Fig. 114).

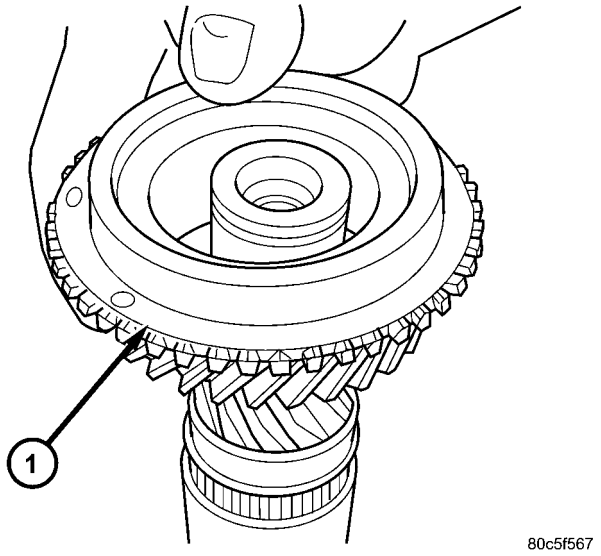

Fig. 114 3rd Gear Removal/Installation

1 - 3RD GEAR

(13) Inspect third gear thrust washer for signs of excessive wear. To replace, drive off of input shaft with suitable drift and hammer.

ASSEMBLY

NOTE: Depending on date of manufacture, some input shafts will utilize a needle bearing under the 3rd and 4th Speed Gears.

NOTE: When servicing the input shaft assembly, all snap rings MUST be replaced with new ones upon assembly. 5th gear nut must also be replaced.

NOTE: When installing 3/4 synchronizer hub to shaft, make sure to align oil slots on synchronizer hub face with oil hole in the shaft splined hub journal.

NOTE: Refer to (Fig. 115) for input shaft assembly reference.

(1) Install input shaft into fixture 8487.

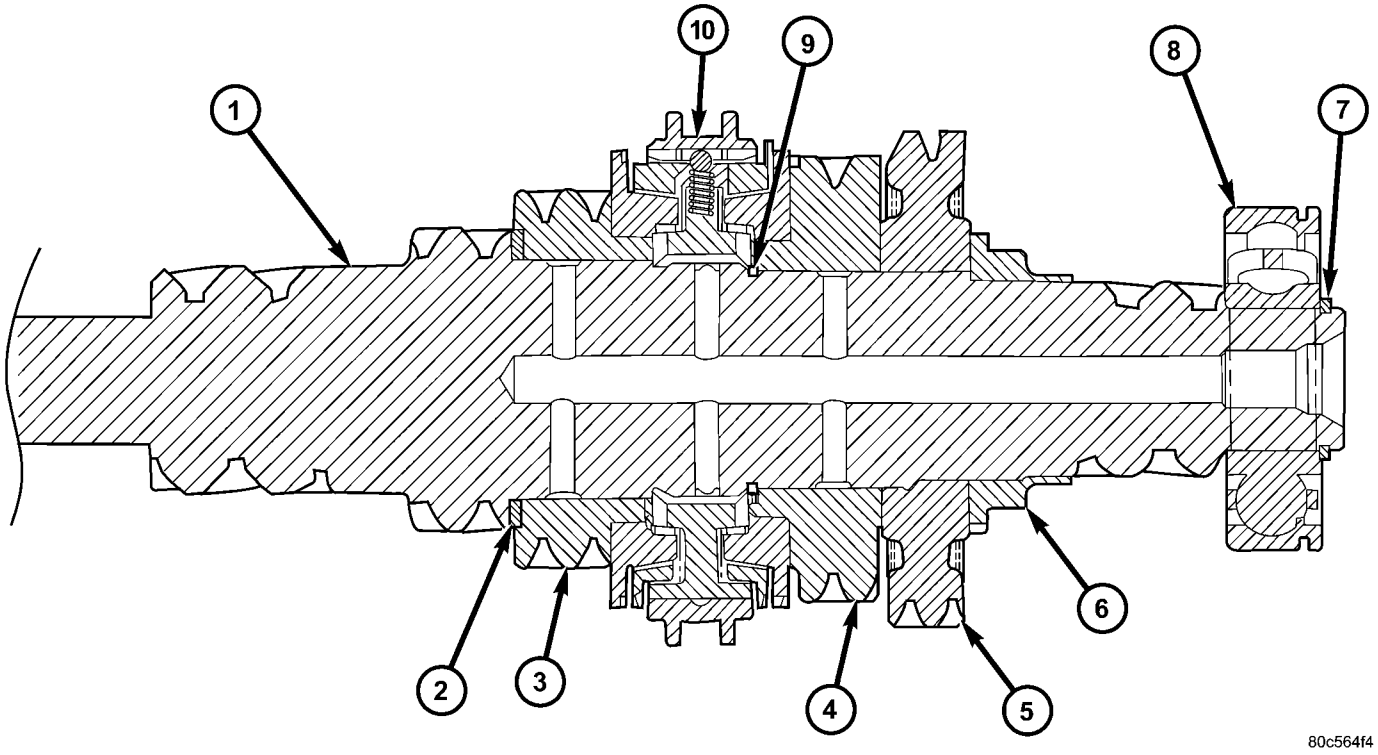

Fig. 115 Input Shaft Assembly

1 - INPUT SHAFT
2 - THRUST WASHER
3 - 3RD GEAR
4 - 4TH GEAR
5 - 5TH GEAR
6 - 5TH GEAR NUT
7 - SNAP RING
8 - INPUT BEARING (SEALED)
9 - SNAP RING
10 - 3/4 SYNCHRONIZER

INPUT SHAFT (Continued)

(2) Install thrust washer if removed upon disassembly.

(3) Install 3rd gear and needle bearing (if equipped) (Fig. 116).

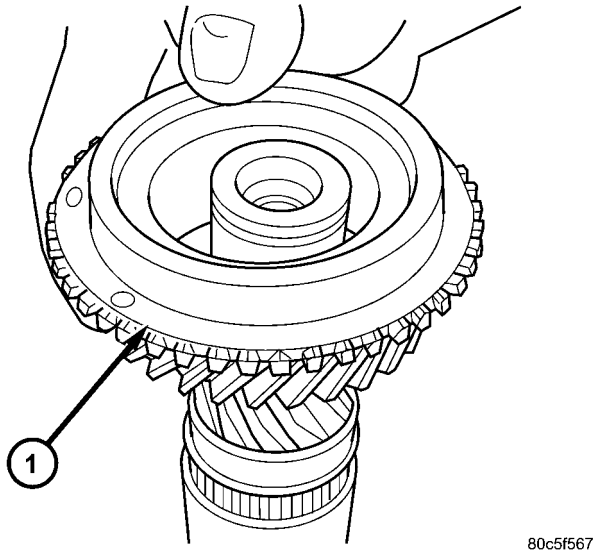

Fig. 116 3rd Gear Removal/Installation

1 - 3RD GEAR

(4) Install 3rd gear blocker ring (Fig. 117).

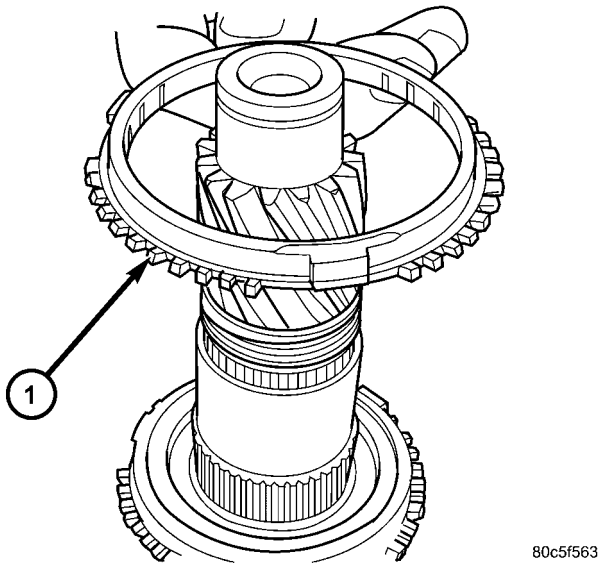

Fig. 117 3rd Gear Blocker Ring

1 - 3RD GEAR BLOCKER RING

(5) Install 3/4 synchronizer (Fig. 118). **When installing 3/4 synchronizer hub to shaft, make sure to align oil slots on synchronizer hub face with oil hole in the shaft splined hub journal.**

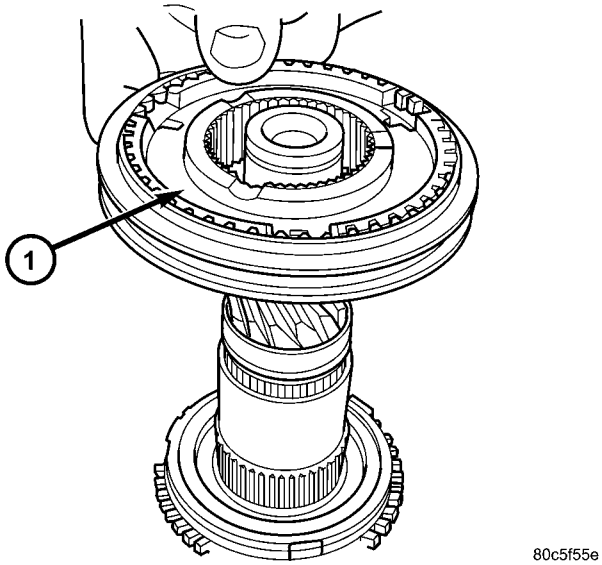

Fig. 118 3/4 Synchro Assembly

1 - 3/4 SYNCHRONIZER

(6) Install **NEW** 3/4 synchronizer snap ring (Fig. 119).

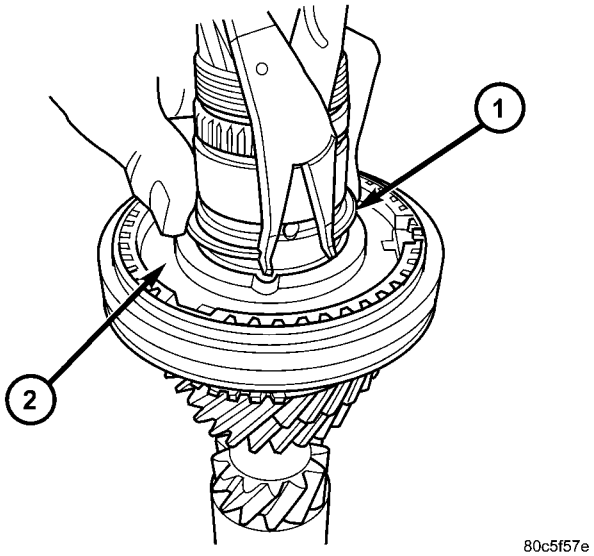

Fig. 119 3/4 Synchro Snap Ring

1 - SNAP RING
2 - 3/4 SYNCHRONIZER

INPUT SHAFT (Continued)

(7) Install 4th gear blocker ring (Fig. 120).

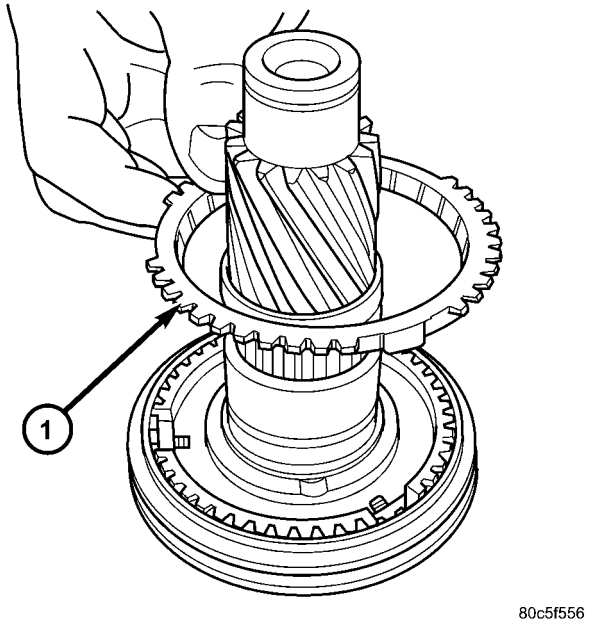

Fig. 120 4th Gear Blocker Ring

1 - 4th GEAR BLOCKER RING

(8) Install 4th gear and needle bearing (if equipped) (Fig. 121).

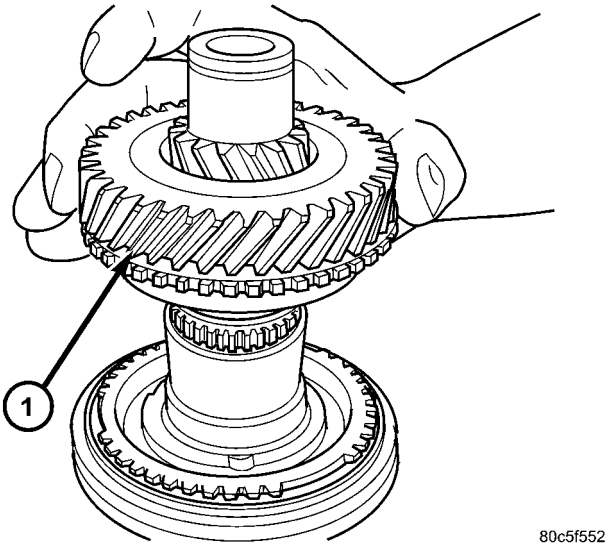

Fig. 121 4th Gear Removal/Installation

1 - 4th GEAR

(9) Install 5th gear and press into position using installer 8481 (Fig. 122).

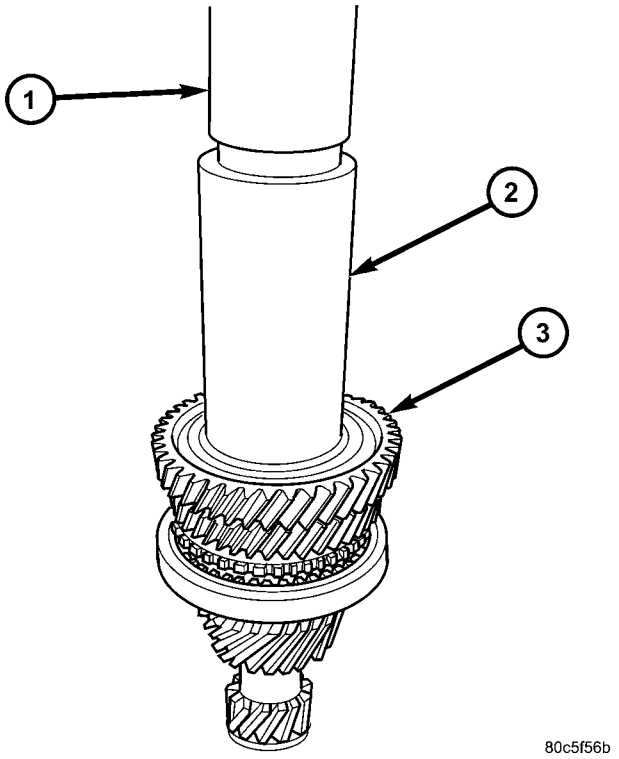

Fig. 122 5th Gear Installation

1 - ARBOR PRESS RAM
2 - INSTALLER 8481
3 - 5TH GEAR

(10) Install **NEW** 5th gear nut and torque to 262 N·m (193 ft. lbs.) using wrench 8478 (Fig. 123).

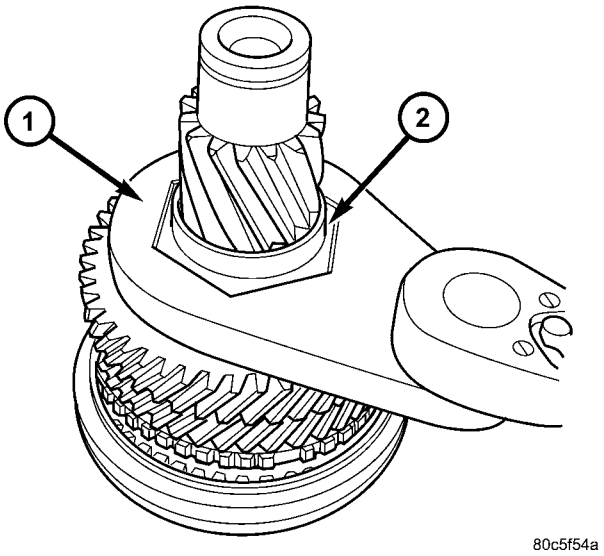

Fig. 123 5th Gear Nut Removal/Installation

1 - WRENCH 8478
2 - 5TH GEAR NUT

INPUT SHAFT (Continued)

(11) Stake 5th Gear nut in four (4) places as follows:

(a) Install staking tool 8479 to 5th gear nut.

(b) Tighten upper thumb screw by hand (Fig. 124).

(c) Tighten two (2) side thumb screws by hand.

(d) Tighten both staking screws until they bottom on tool body (Fig. 125).

(e) Loosen staking screws and thumb screws. Remove tool and visually inspect stake (Fig. 126).

(f) Remove tool, rotate 90°, and repeat process to stake in four (4) places.

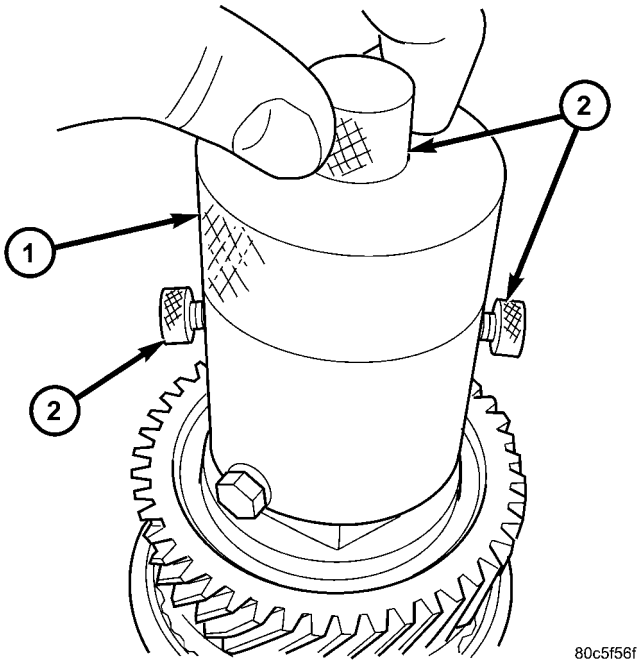

Fig. 124 Staking Tool Set-Up

1 - STAKING TOOL 8479
2 - THUMB SCREWS (3)

NOTE: The input shaft sealed roller bearing and snap ring do not get installed until transaxle assembly to facilitate installation of the reverse idler gear mechanism.

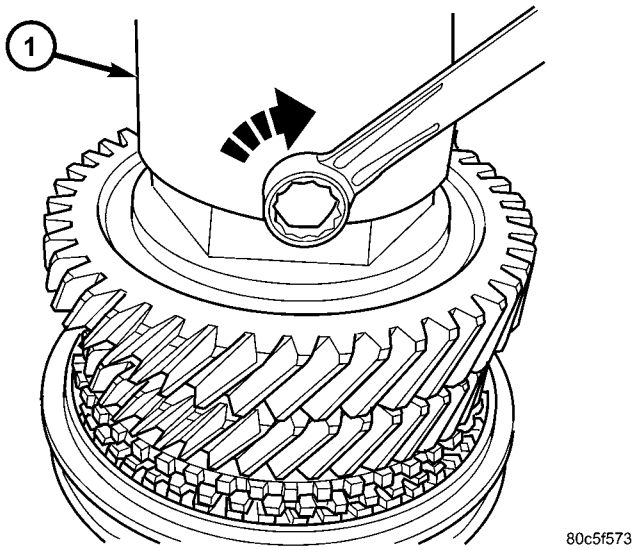

Fig. 125 Tighten Stake Screws

1 - STAKING TOOL 8479

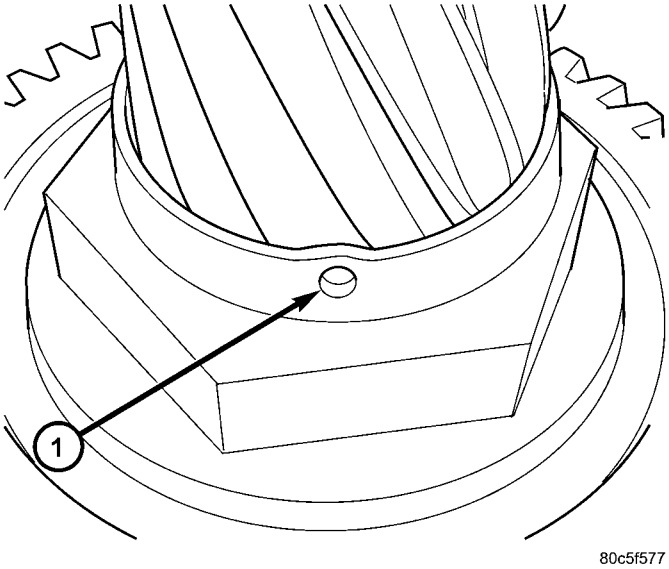

Fig. 126 5th Gear Nut Stake (Four Places)

1 - STAKE

INTERMEDIATE SHAFT

DESCRIPTION

The intermediate shaft assembly (Fig. 127) is part of the transaxle geartrain, meshes with and is driven by the input shaft, drives the differential via an integrated pinion gear, and consists of the following components:

- Intermediate Mainshaft
- 1st Speed Gear
- 2nd Speed Gear
- 3/4 Cluster Gear
- 5th Speed Gear
- Reverse Gear
- 1/2 Synchronizer
- 5/R Synchronizer

The intermediate shaft is supported by a caged roller bearing at the front of the transaxle, and a sealed roller bearing at the rear of the transaxle.

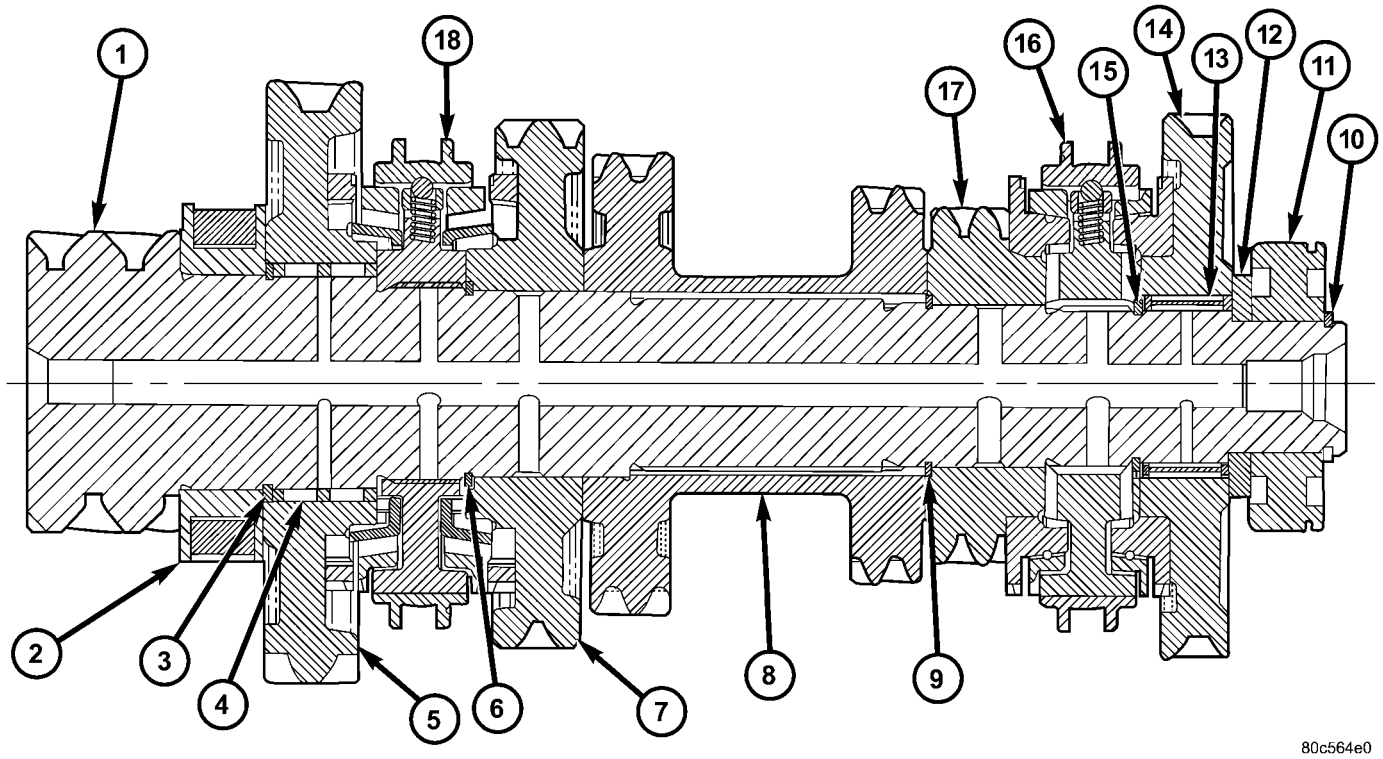

Fig. 127 Intermediate Shaft Assembly

1 - INTERMEDIATE SHAFT
2 - ROLLER BEARING
3 - SNAP RING
4 - NEEDLE BEARING
5 - 1ST SPEED GEAR
6 - SNAP RING
7 - 2ND SPEED GEAR
8 - 3/4 CLUSTER GEAR
9 - SNAP RING
10 - SNAP RING
11 - SEALED ROLLER BEARING
12 - THRUST WASHER
13 - NEEDLE BEARING
14 - REVERSE GEAR
15 - SNAP RING
16 - 5/R SYNCHRO
17 - 5TH SPEED GEAR
18 - 1/2 SYNCHRO

INTERMEDIATE SHAFT (Continued)

DISASSEMBLY

CAUTION: Do not re-use snap rings when servicing the intermediate shaft assembly. Discard upon disassembly and install new ones provided with available snap ring service kit.

NOTE: Depending on date of transaxle manufacture, some intermediate shafts will utilize a needle bearing under the 2nd and 5th Speed Gears.

(1) Install intermediate shaft assembly to arbor press table with bearing splitter P-334 under the reverse gear.

(2) Install 8486-4 button to intermediate shaft. Using arbor press ram, press reverse gear and intermediate roller bearing off of shaft, while holding remaining assembly with hand (Fig. 128).

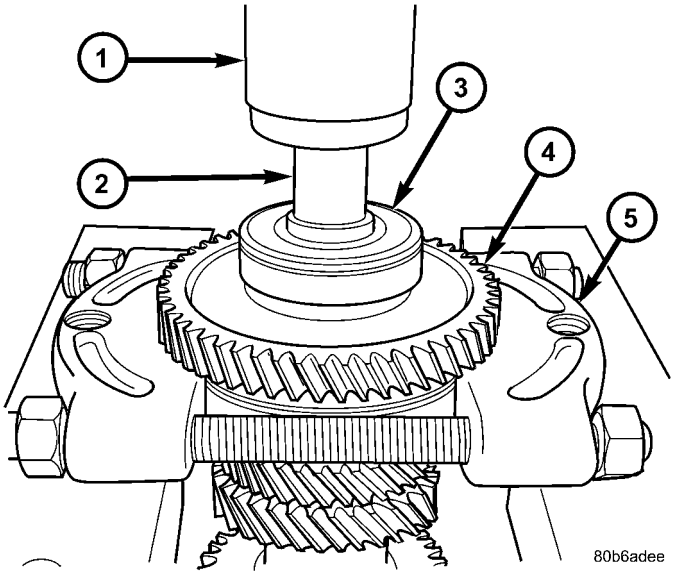

Fig. 128 Bearing and Reverse Gear Removal

1 - ARBOR PRESS RAM
2 - ADAPTER 8486-4
3 - SEALED ROLLER BEARING
4 - REVERSE GEAR
5 - BEARING SPLITTER P-334

(3) Remove reverse gear blocker ring.

(4) Remove reverse gear needle bearing (Fig. 129).

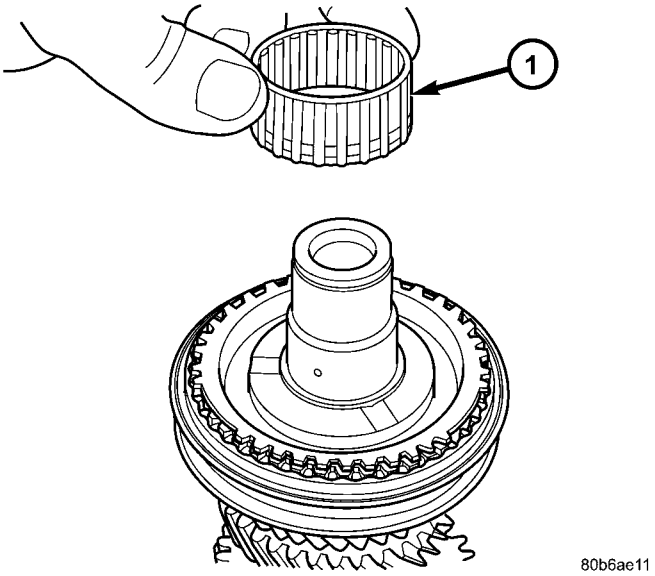

Fig. 129 Reverse Gear Needle Bearing

1 - NEEDLE BEARING

(5) Remove 5/R synchro snap ring (Fig. 130).

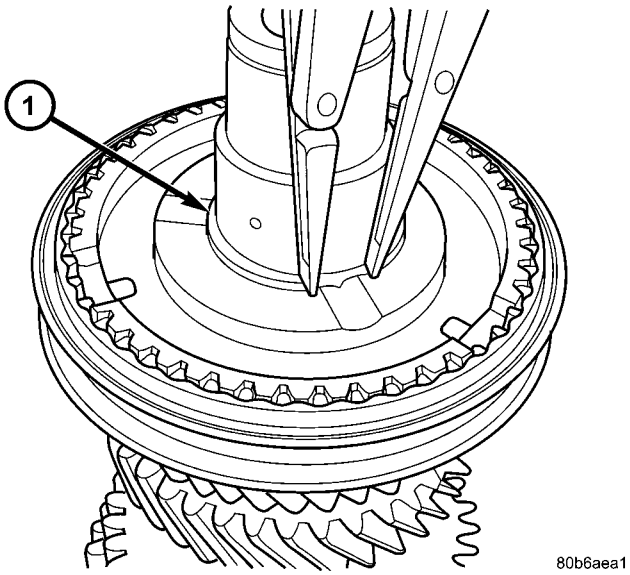

Fig. 130 5/R Synchro Snap Ring

1 - SNAP RING

INTERMEDIATE SHAFT (Continued)

(6) Remove 5/R synchro (Fig. 131).

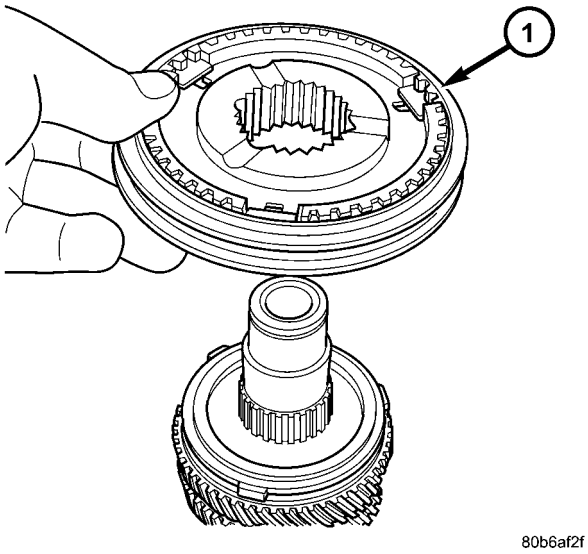

Fig. 131 5/R Synchronizer

1 - 5/R SYNCHRO ASSEMBLY

(7) Remove 5th gear blocker ring (Fig. 132).

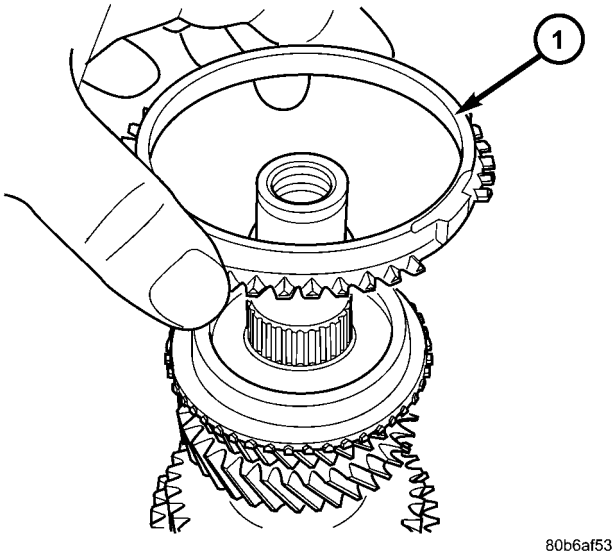

Fig. 132 5th Gear Blocker Ring

1 - 5th GEAR BLOCKER RING

(8) Remove 5th gear and needle bearing (if equipped) (Fig. 133).

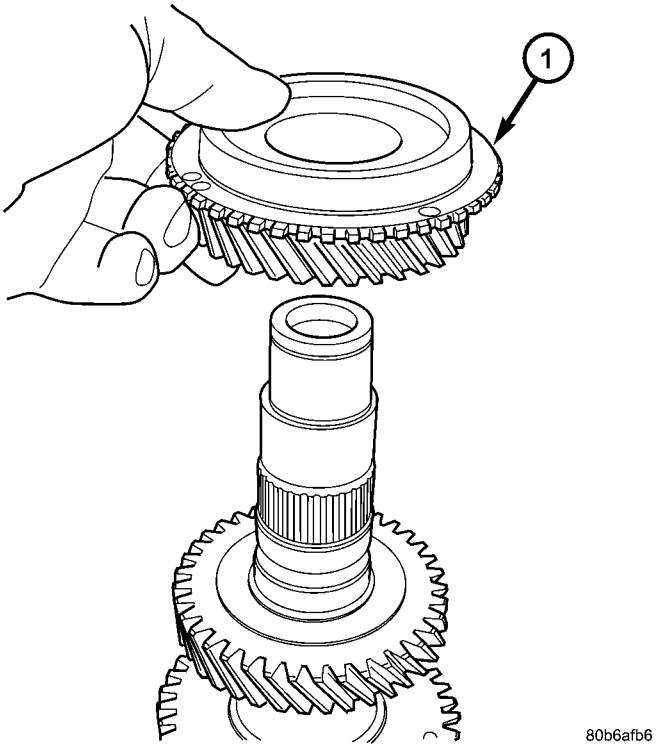

Fig. 133 5th Gear

1 - 5th GEAR

(9) Remove 3/4 cluster gear snap ring (Fig. 134).

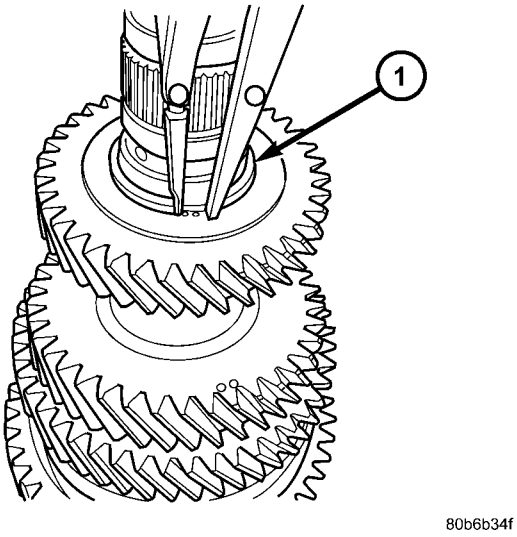

Fig. 134 3/4 Cluster Gear Snap Ring

1 - SNAP RING

INTERMEDIATE SHAFT (Continued)

(10) Install shaft assembly into fixture 8483, with split collar 8483-3 oriented chamfer side up (Fig. 135). Place 8483-2 into position with chamfer side up (Fig. 136).

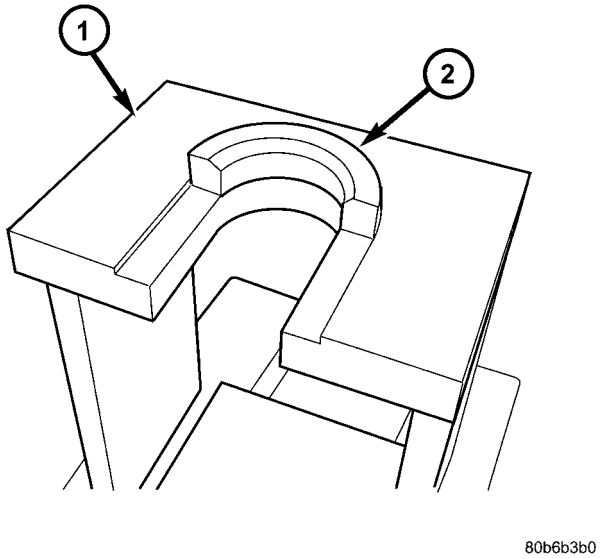

Fig. 135 Fixture 8483

1 - FIXTURE 8483
2 - COLLAR 8483-3

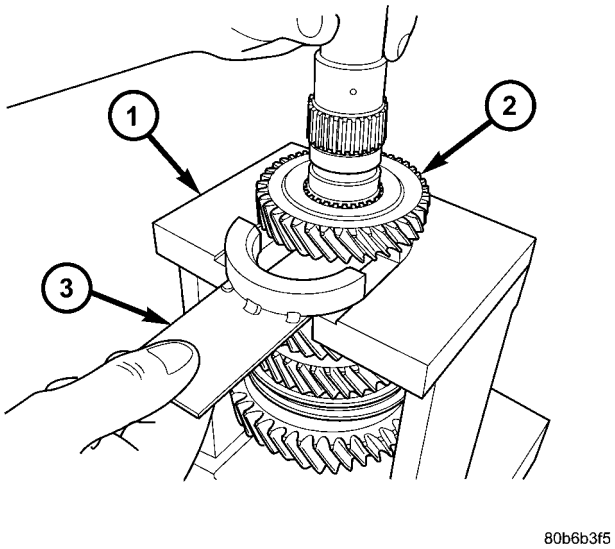

Fig. 136 Loading Intermediate Shaft

1 - FIXTURE 8483
2 - 3/4 CLUSTER GEAR
3 - COLLAR 8483-2

(11) Using an arbor press, press intermediate shaft out of 3/4 cluster gear (Fig. 137).

(12) Remove intermediate shaft from fixture and remove 3/4 cluster gear from shaft (Fig. 138).

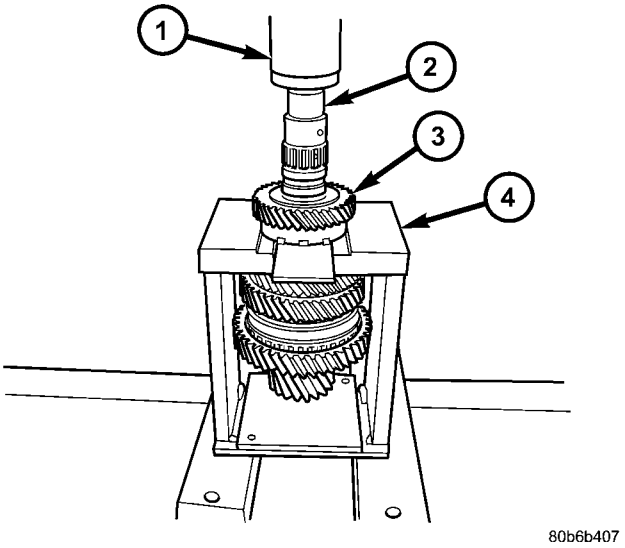

Fig. 137 Press Intermediate Shaft Out of 3/4 Cluster Gear

1 - ARBOR PRESS RAM
2 - INTERMEDIATE SHAFT
3 - 3/4 CLUSTER GEAR
4 - FIXTURE 8483

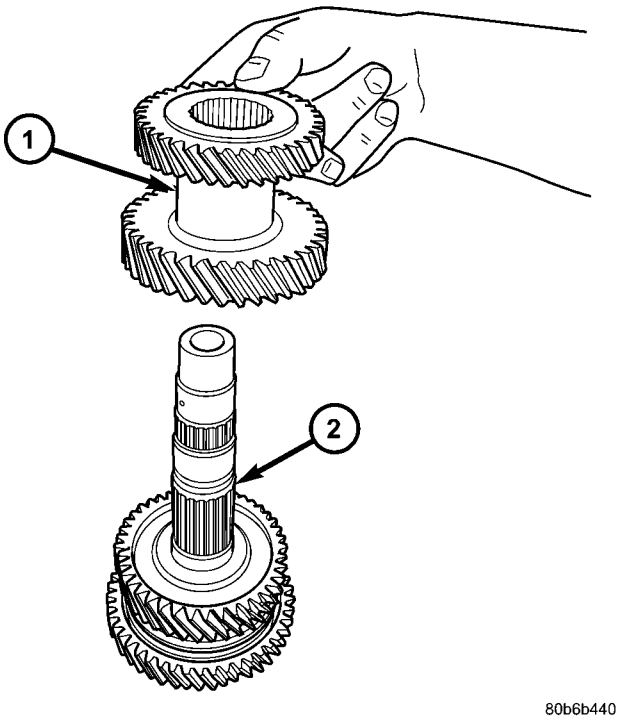

Fig. 138 3/4 Cluster Gear

1 - 3/4 CLUSTER GEAR
2 - INTERMEDIATE SHAFT

INTERMEDIATE SHAFT (Continued)

(13) Remove 2nd gear and needle bearing (if equipped) (Fig. 139).

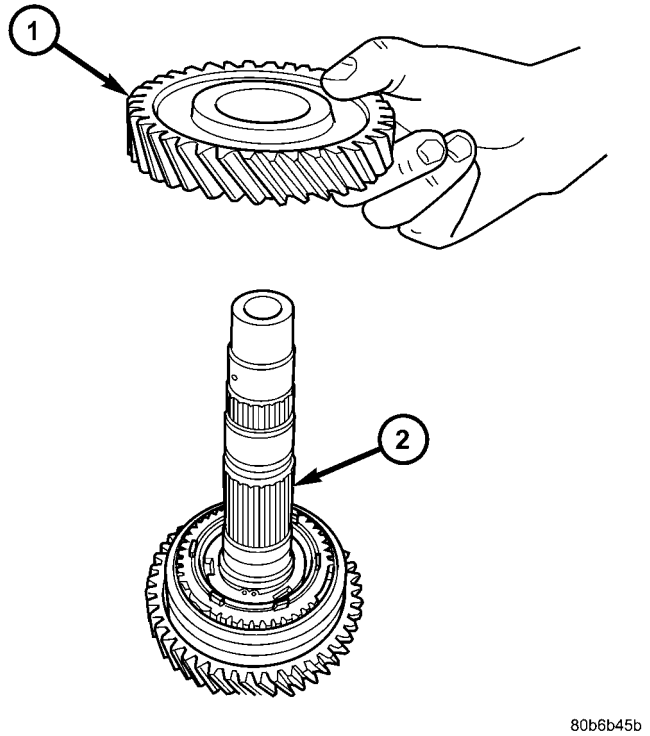

Fig. 139 2nd Gear Removal

1 - 2ND GEAR
2 - INTERMEDIATE SHAFT

(14) Remove 2nd gear reactor ring (Fig. 140).

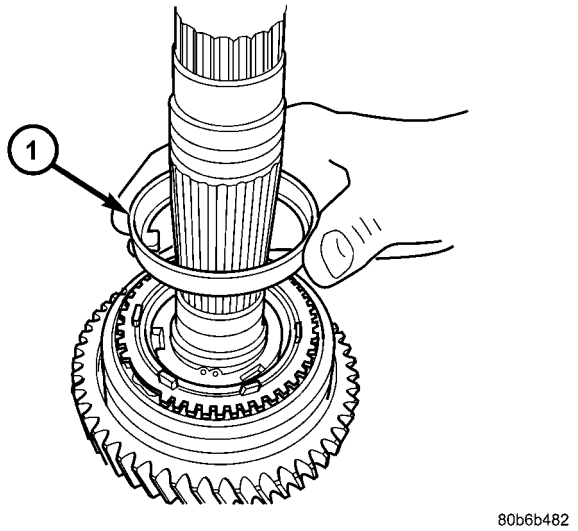

Fig. 140 2nd Gear Reactor Ring

1 - 2ND GEAR REACTOR RING

(15) Remove 2nd gear friction cone (Fig. 141).

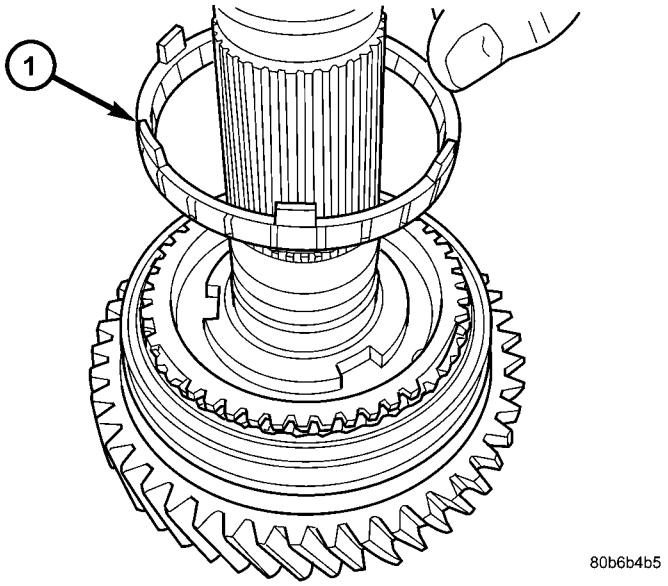

Fig. 141 2nd Gear Friction Cone

1 - 2ND GEAR FRICTION CONE

(16) Remove 2nd Gear outer blocker ring (Fig. 142).

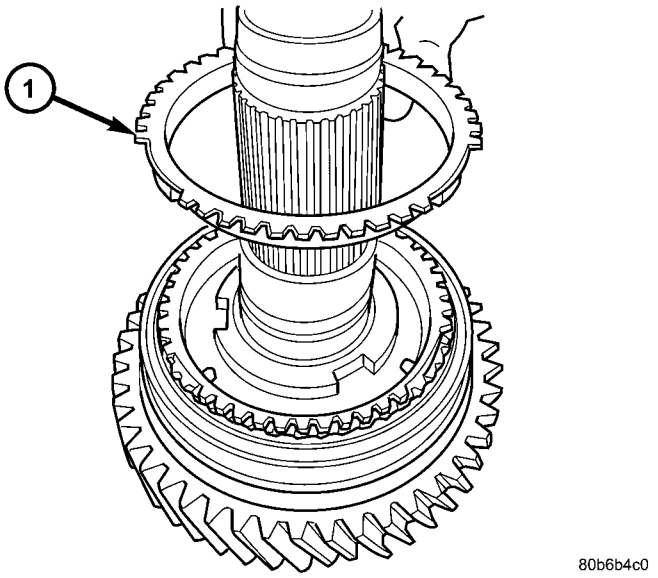

Fig. 142 2nd Gear Outer Blocker Ring

1 - 2ND GEAR BLOCKER RING

INTERMEDIATE SHAFT (Continued)

(17) Remove 1/2 synchro snap ring (Fig. 143).

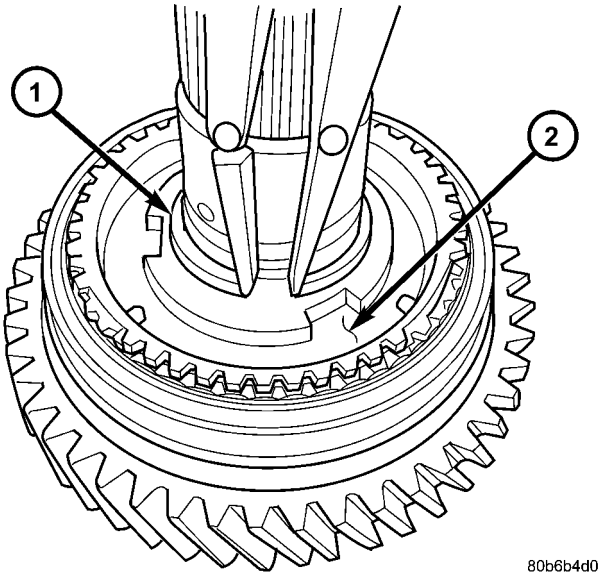

Fig. 143 1/2 Synchro Snap Ring

1 - SNAP RING
2 - 1/2 SYNCHRO HUB

(18) Remove 1/2 synchro from shaft (Fig. 144).

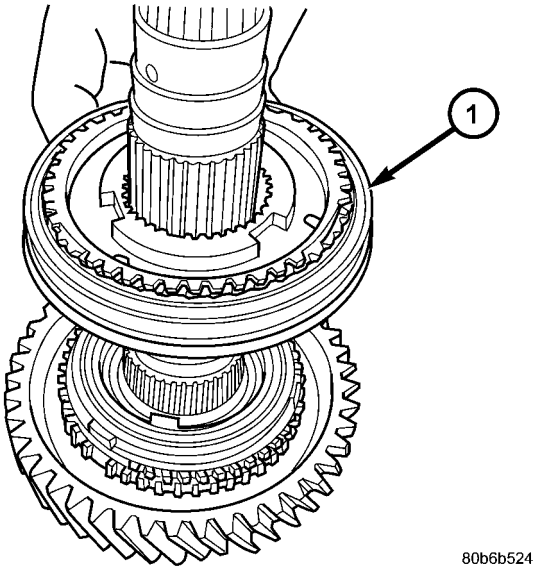

Fig. 144 1/2 Synchronizer

1 - 1/2 SYNCHRONIZER

(19) Remove 1st gear blocker ring (Fig. 145).

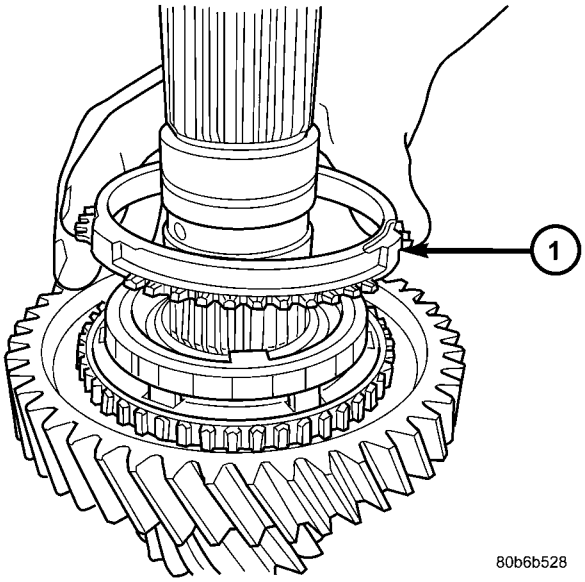

Fig. 145 1st Gear Blocker Ring

1 - 1ST GEAR BLOCKER RING

(20) Remove 1st gear friction cone (Fig. 146).

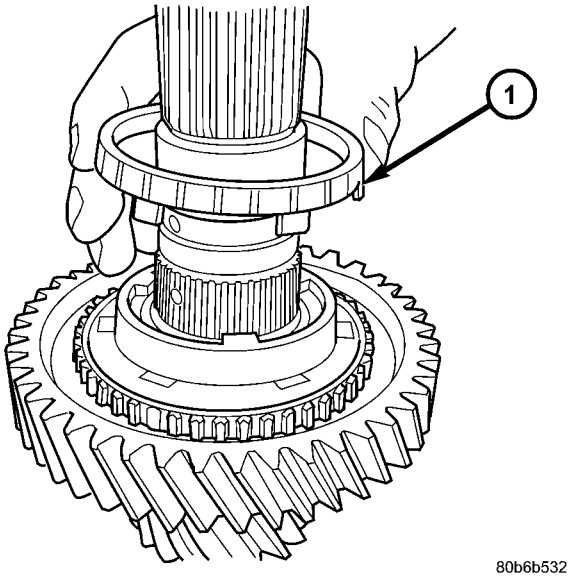

Fig. 146 1st Gear Friction Cone

1 - 1ST GEAR FRICTION CONE

INTERMEDIATE SHAFT (Continued)

(21) Remove 1st gear reactor ring (Fig. 147).

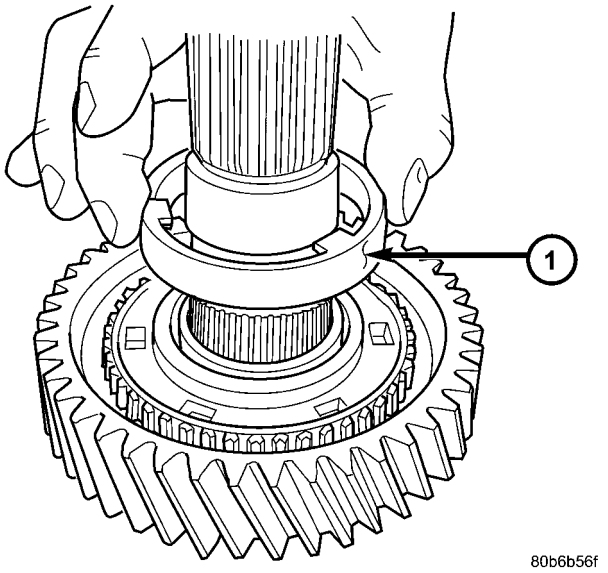

Fig. 147 1st Gear Reactor Ring

1 - 1ST GEAR REACTOR RING

(22) Remove 1st gear from shaft (Fig. 148).

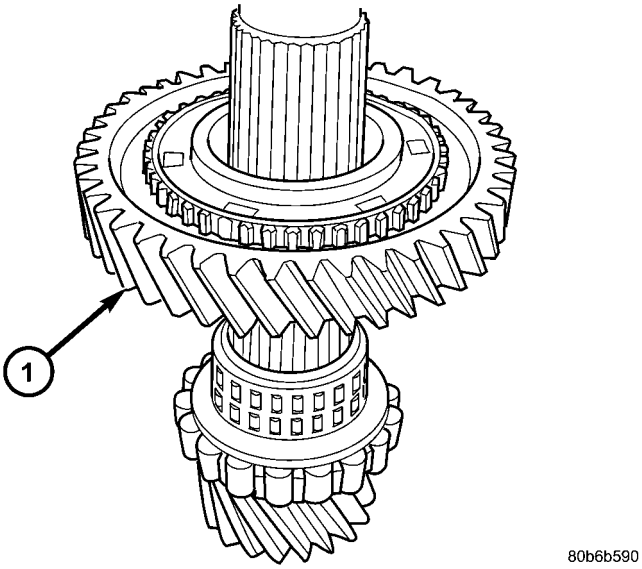

Fig. 148 1st Gear Removal

1 - 1ST GEAR

(23) Remove 1st gear needle bearing (Fig. 149).

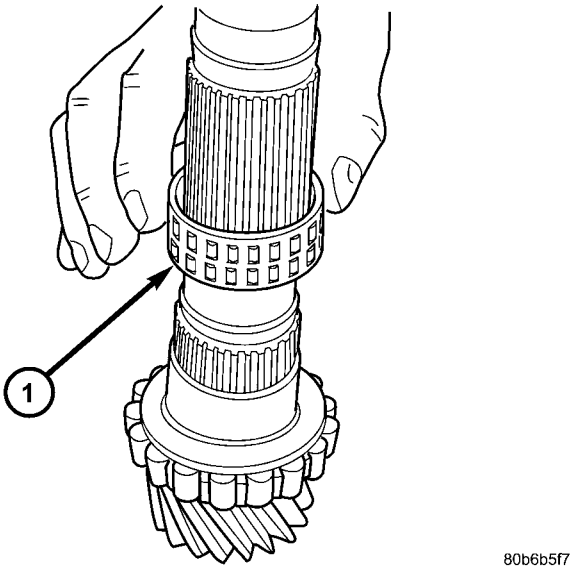

Fig. 149 1st Gear Needle Bearing

1 - 1ST GEAR NEEDLE BEARING

(24) Remove intermediate shaft roller bearing snap ring (Fig. 150).

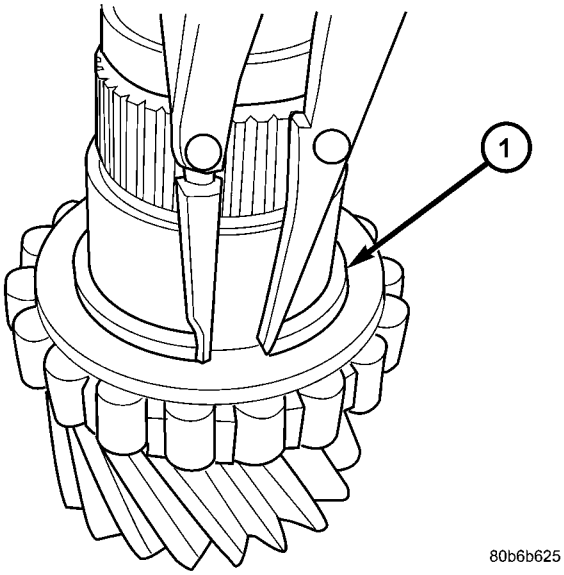

Fig. 150 Intermediate Shaft Roller Bearing Snap Ring

1 - SNAP RING

INTERMEDIATE SHAFT (Continued)

(25) Press intermediate shaft out of roller bearing supported by bearing splitter P-334 (Fig. 151). **Roller bearing is not re-usable once removed. It is necessary to install a new roller bearing upon re-assembly.**

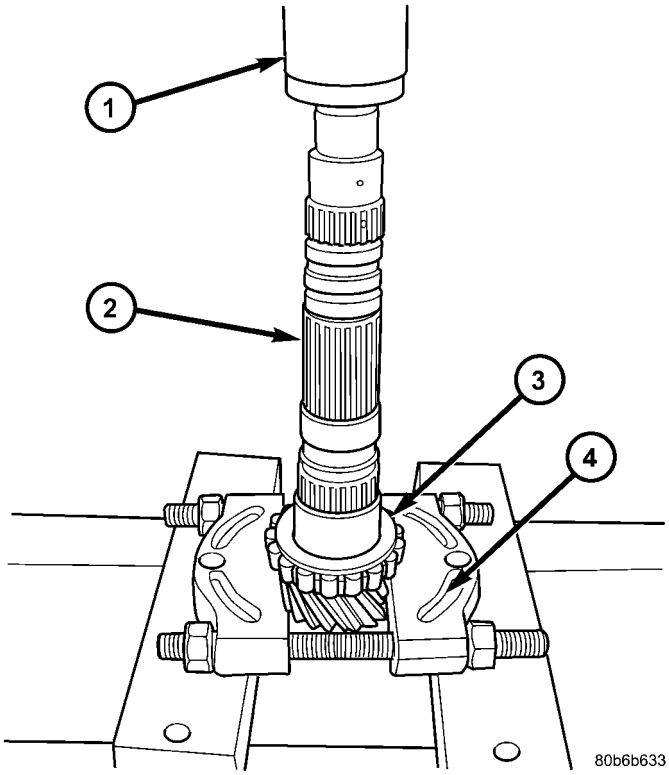

Fig. 151 Intermediate Shaft Roller Bearing Removal

1 - ARBOR PRESS RAM
2 - INTERMEDIATE SHAFT
3 - ROLLER BEARING
4 - BEARING SPLITTER P-334

ASSEMBLY

NOTE: Depending on date of transaxle manufacture, some intermediate shafts will utilize a needle bearing under 2nd and 5th Speed Gears.

NOTE: Do not re-use snap rings when servicing the intermediate shaft assembly. Discard snap rings and install new ones provided with available snap ring service kit.

NOTE: When installing 1/2 & 5/R synchronizers, make sure to align oil slots on synchronizer hub face with oil hold in the shaft splined hub journal.

NOTE: Refer to (Fig. 152) for intermediate shaft assembly reference.

(1) Press intermediate shaft into NEW roller bearing with arbor press (Fig. 153).

(2) Install intermediate shaft roller bearing snap ring (Fig. 154).

INTERMEDIATE SHAFT (Continued)

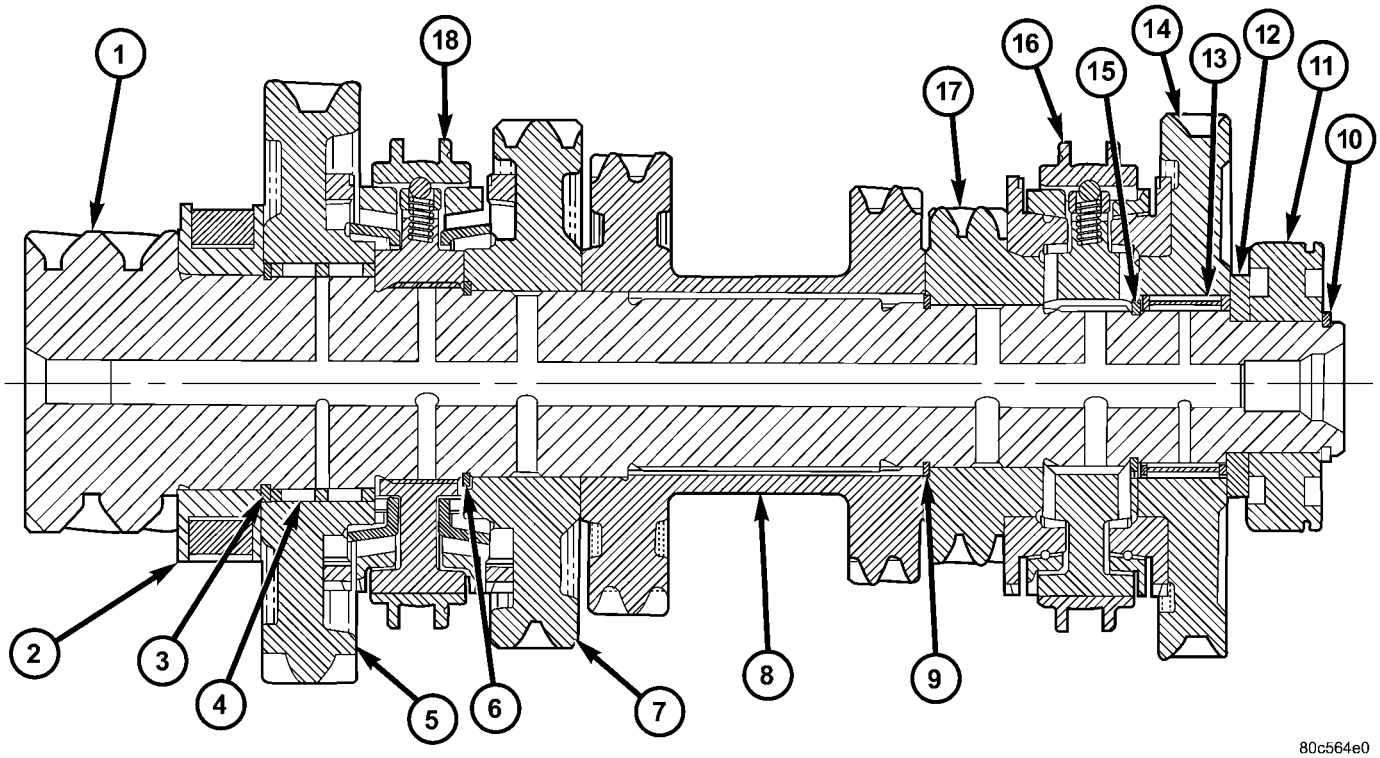

Fig. 152 Intermediate Shaft Assembly

1 - INTERMEDIATE SHAFT
2 - ROLLER BEARING
3 - SNAP RING
4 - NEEDLE BEARING
5 - 1ST SPEED GEAR
6 - SNAP RING
7 - 2ND SPEED GEAR
8 - 3/4 CLUSTER GEAR
9 - SNAP RING
10 - SNAP RING
11 - SEALED ROLLER BEARING
12 - THRUST WASHER
13 - NEEDLE BEARING
14 - REVERSE GEAR
15 - SNAP RING
16 - 5/R SYNCHRO
17 - 5TH SPEED GEAR
18 - 1/2 SYNCHRO

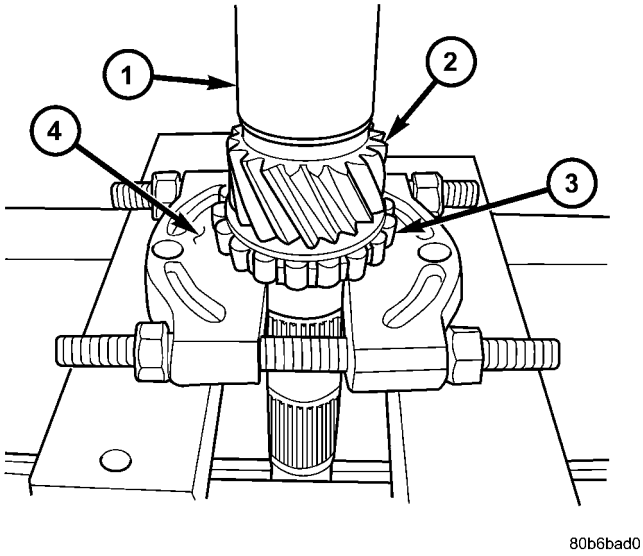

Fig. 153 Intermediate Shaft Bearing Installation

1 - ARBOR PRESS
2 - INTERMEDIATE SHAFT
3 - CAGED ROLLER BEARING
4 - BEARING SPLITTER

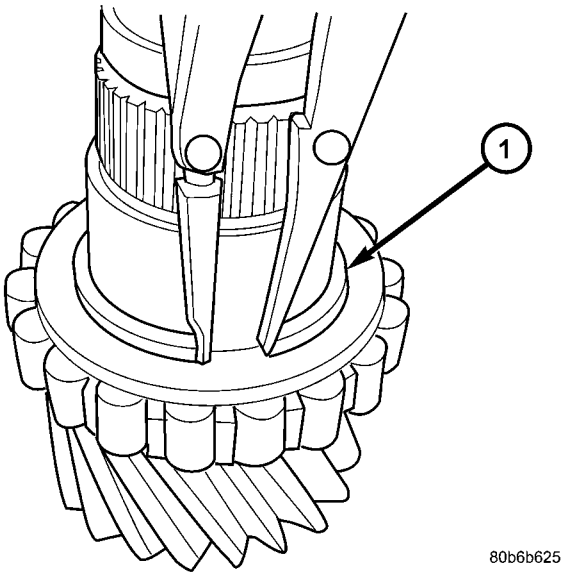

Fig. 154 Intermediate Shaft Roller Bearing Snap Ring

1 - SNAP RING

INTERMEDIATE SHAFT (Continued)

(3) Install 1st gear roller bearing to intermediate shaft (Fig. 155).

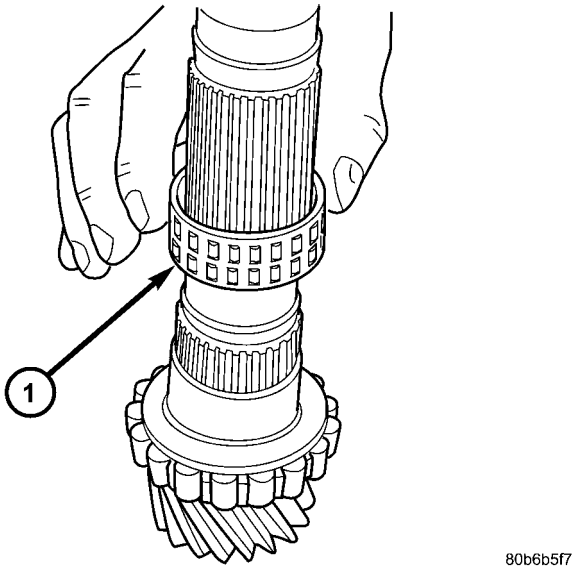

Fig. 155 1st Gear Needle Bearing

1 - 1ST GEAR NEEDLE BEARING

(4) Install 1st gear to intermediate shaft (Fig. 156).

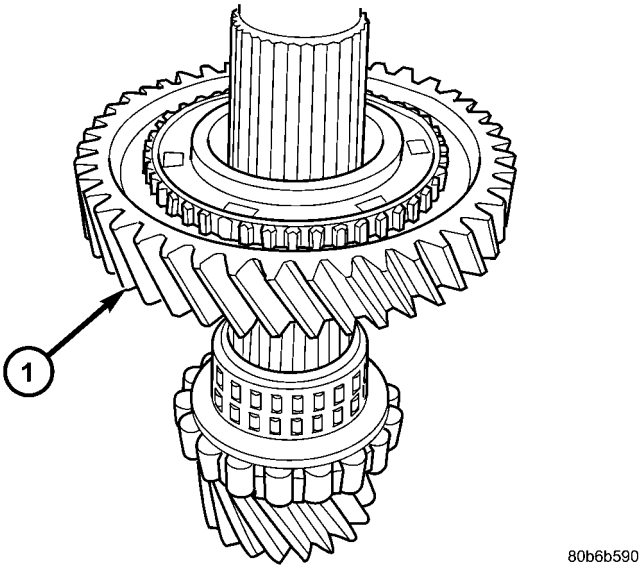

Fig. 156 1st Gear Installation

1 - 1ST GEAR

(5) Install 1/2 synchro to fixture 8483. Insert 1st gear blocker ring, friction cone, and reactor ring as shown in (Fig. 157).

(6) Install intermediate shaft to synchro assembly on fixture (Fig. 158). **When installing 1/2 synchronizer, make sure to align oil slots on synchronizer hub face with oil hole in the shaft splined hub journal.** Line up friction cone and reactor ring tabs to gear slots. Remove shaft assembly from fixture.

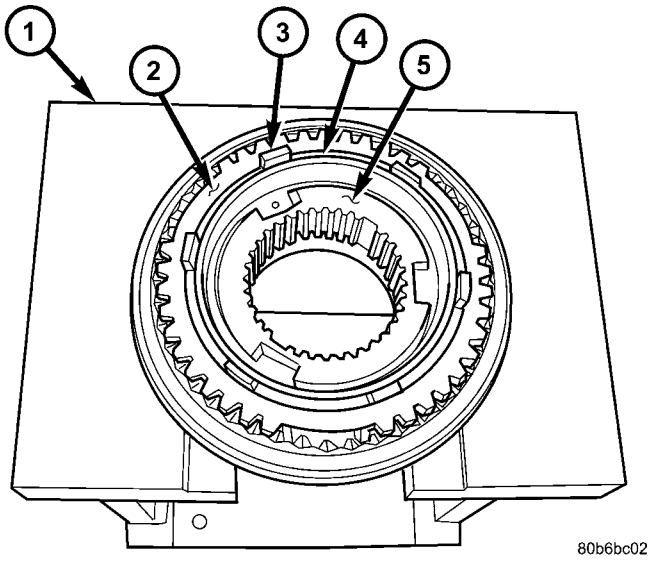

Fig. 157 1/2 Synchro on Fixture 8483

1 - FIXTURE 8483
2 - 1ST GEAR BLOCKER RING
3 - 1ST GEAR FRICTION CONE
4 - 1ST GEAR REACTOR RING
5 - 1/2 SYNCHRONIZER

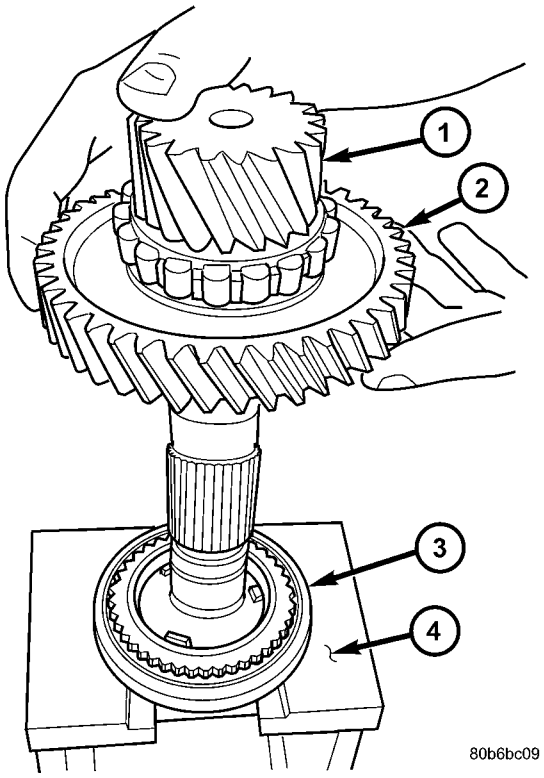

Fig. 158 Install 1/2 Synchro to Intermediate Shaft

1 - INTERMEDIATE SHAFT
2 - 1ST GEAR
3 - 1/2 SYNCHRO ASSEMBLY
4 - FIXTURE 8483

INTERMEDIATE SHAFT (Continued)

(7) Install **NEW** 1/2 synchro snap ring (Fig. 159).

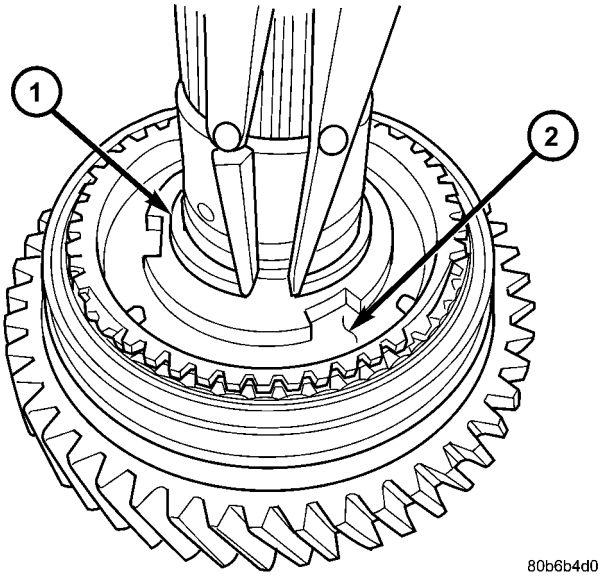

Fig. 159 1/2 Synchro Snap Ring

1 - SNAP RING
2 - 1/2 SYNCHRO HUB

(8) Install 2nd gear blocker ring (Fig. 160).

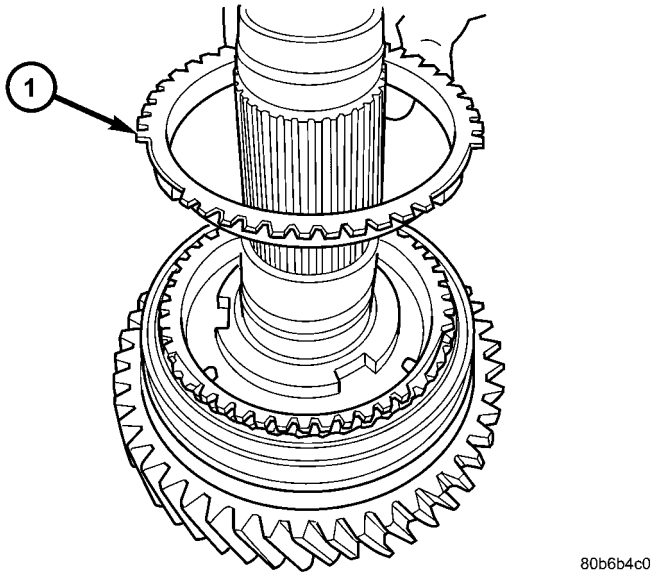

Fig. 160 2nd Gear Blocker Ring

1 - 2ND GEAR BLOCKER RING

(9) Install 2nd gear friction cone (Fig. 161).

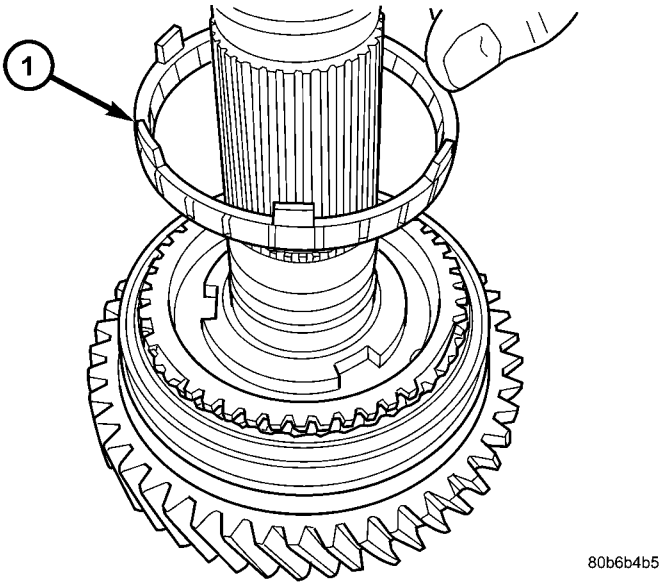

Fig. 161 2nd Gear Friction Cone

1 - 2ND GEAR FRICTION CONE

(10) Install 2nd gear reactor ring (Fig. 162).

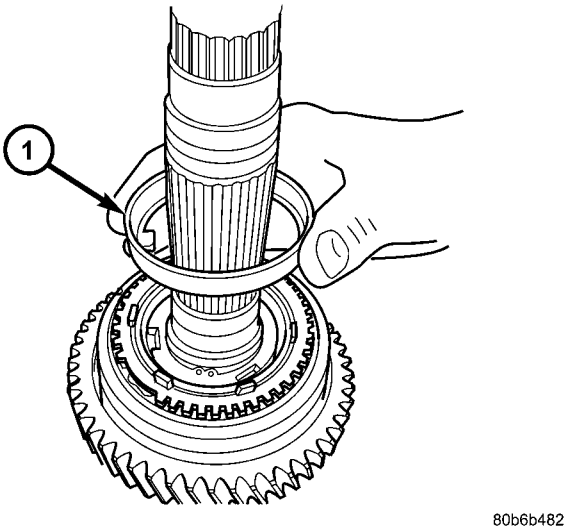

Fig. 162 2nd Gear Reactor Ring

1 - 2ND GEAR REACTOR RING

INTERMEDIATE SHAFT (Continued)

(11) Install 2nd gear and needle bearing (if equipped) to intermediate shaft (Fig. 163).

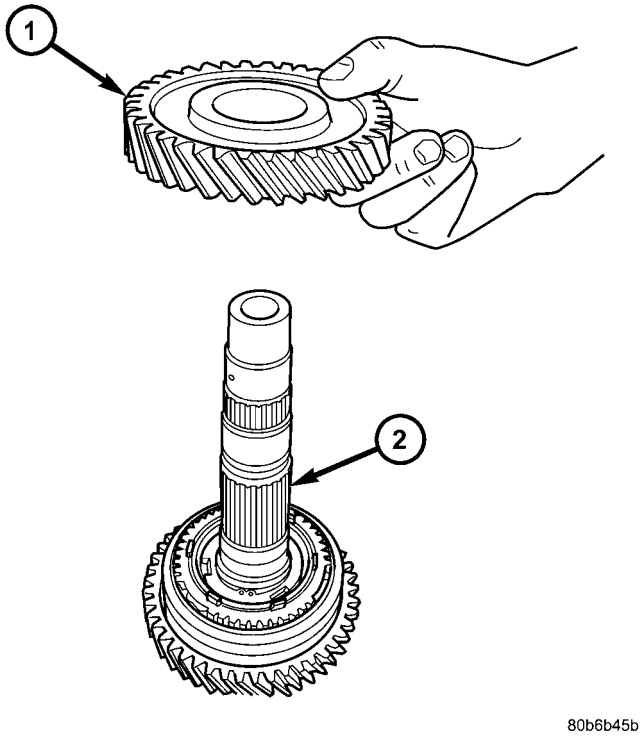

Fig. 163 2nd Gear

1 - 2ND GEAR
2 - INTERMEDIATE SHAFT

(12) Press 3/4 cluster gear onto intermediate shaft using cup 8481 (Fig. 164).

(13) Install **NEW** 3/4 cluster gear snap ring (Fig. 165).

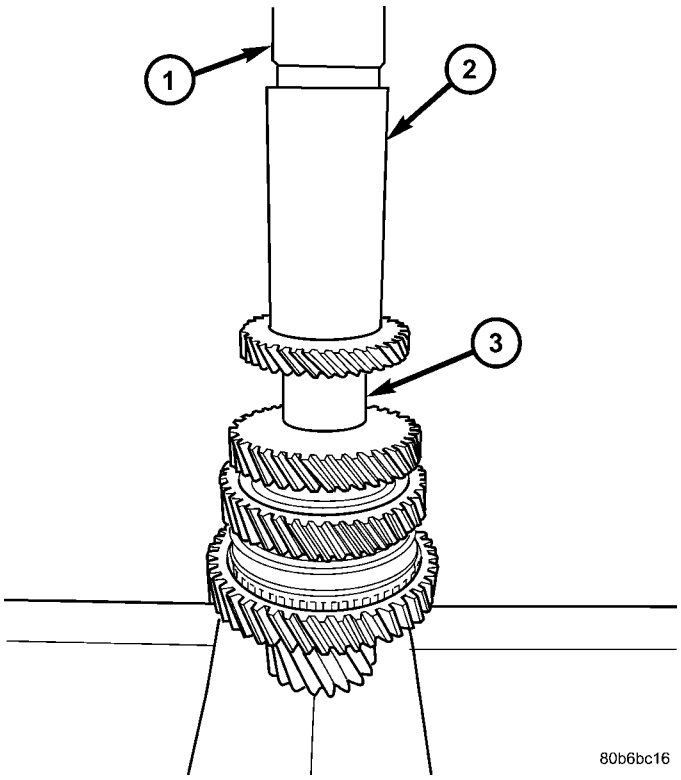

Fig. 164 Install 3/4 Cluster Gear using Tool 8481

1 - ARBOR PRESS
2 - INSTALLER 8481
3 - 3/4 CLUSTER GEAR

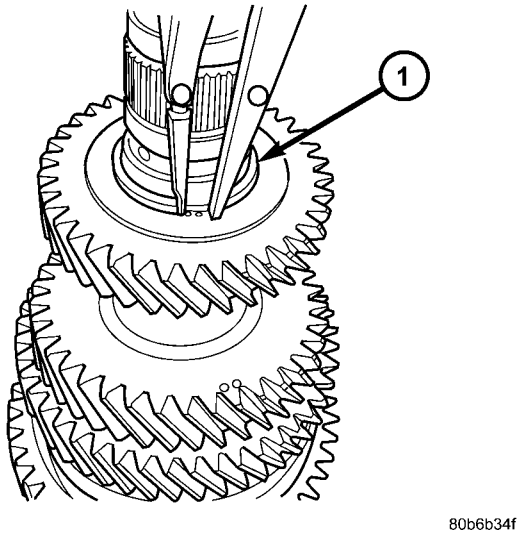

Fig. 165 3/4 Cluster Gear Snap Ring

1 - SNAP RING

INTERMEDIATE SHAFT (Continued)

(14) Install 5th gear and needle bearing (if equipped) to intermediate shaft (Fig. 166).

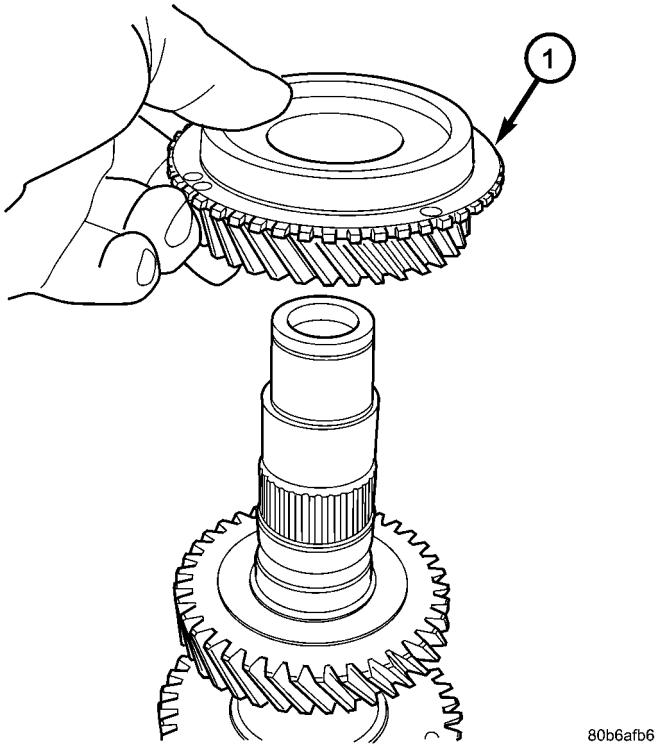

Fig. 166 5th Gear Installation

1 - 5th GEAR

(15) Install 5th gear blocker ring to synchronizer (Fig. 167).

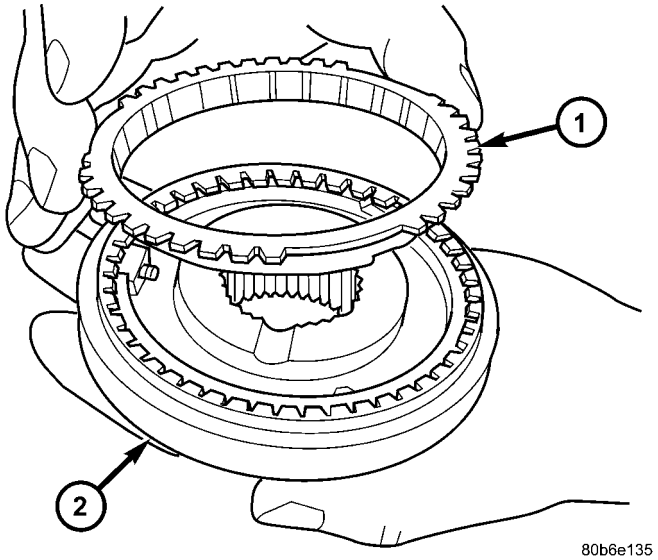

Fig. 167 5th Gear Blocker Ring to Synchro

1 - 5th GEAR BLOCKER RING
2 - 5/R SYNCHRONIZER

(16) Install 5th gear synchronizer assembly to intermediate shaft (Fig. 168). **When installing 5/R synchronizer, make sure to align oil slots on synchronizer hub face with oil hole in the shaft splined hub journal.**

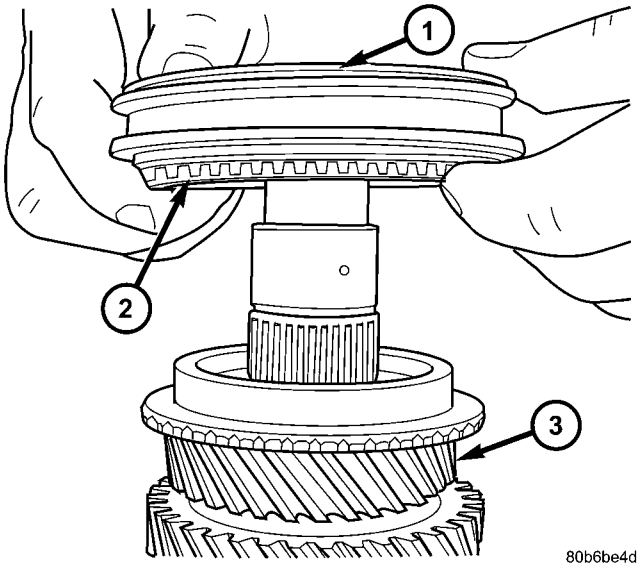

Fig. 168 Install 5/R Synchro and 5th Blocker Ring to 5th Gear

1 - 5/R SYNCHRONIZER
2 - 5TH GEAR BLOCKER RING
3 - 5TH GEAR

(17) Install **NEW** 5/R synchro snap ring (Fig. 169).

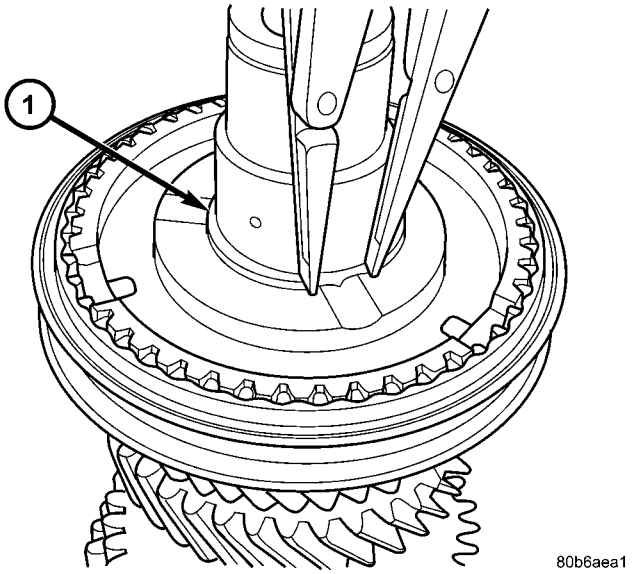

Fig. 169 5/R Synchro Snap Ring

1 - SNAP RING

INTERMEDIATE SHAFT (Continued)

(18) Install reverse gear blocker ring (Fig. 170).

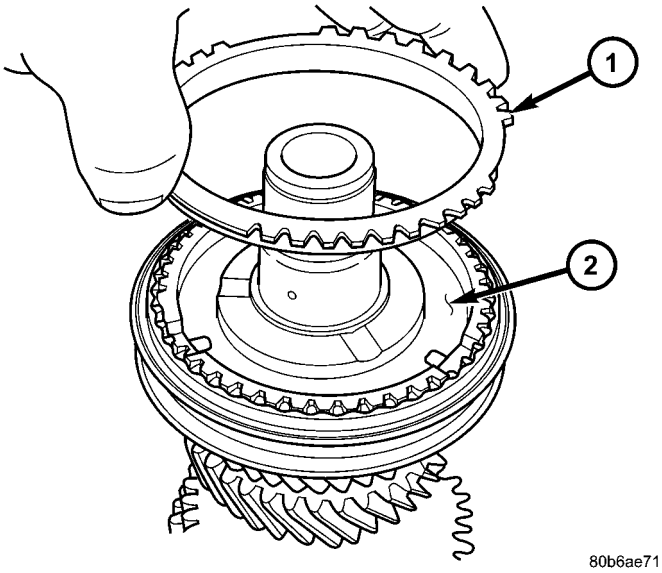

Fig. 170 Reverse Gear Blocker Ring

1 - REVERSE BLOCKER RING
2 - 5/R SYNCHRONIZER

(19) Install reverse gear needle bearing (Fig. 171).

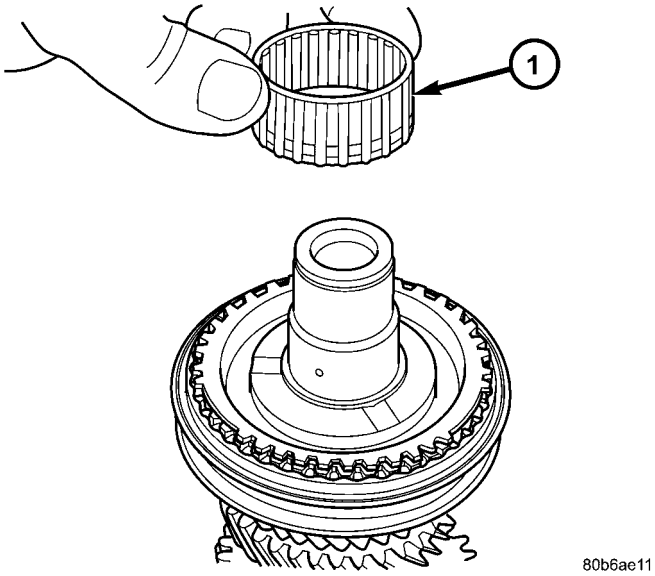

Fig. 171 Reverse Gear Needle Bearing

1 - NEEDLE BEARING

(20) Install reverse gear to intermediate shaft.

(21) Install intermediate shaft sealed roller bearing and thrust washer using installer 8482 (Fig. 172).

(22) Install **NEW** intermediate shaft sealed bearing snap ring (Fig. 173).

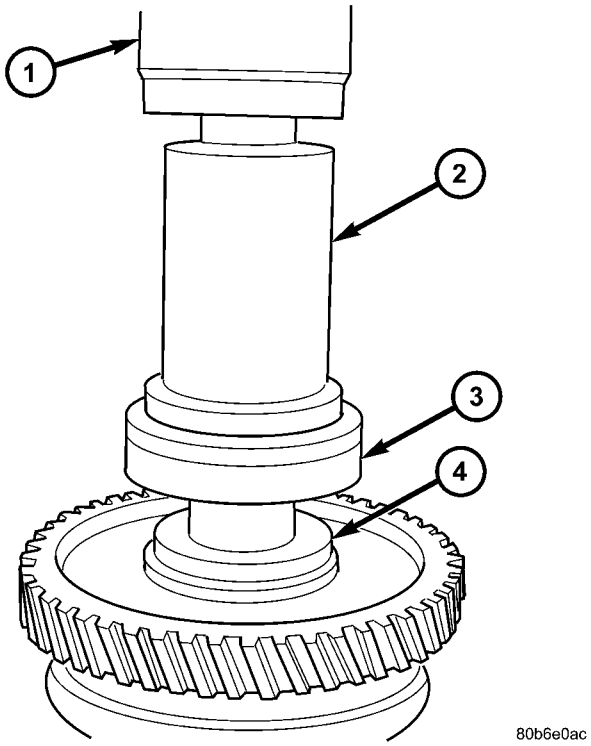

Fig. 172 Sealed Roller Bearing Installatiion

1 - ARBOR PRESS
2 - REMOVER/INSTALLER 8482
3 - SEALED ROLLER BEARING
4 - THRUST WASHER

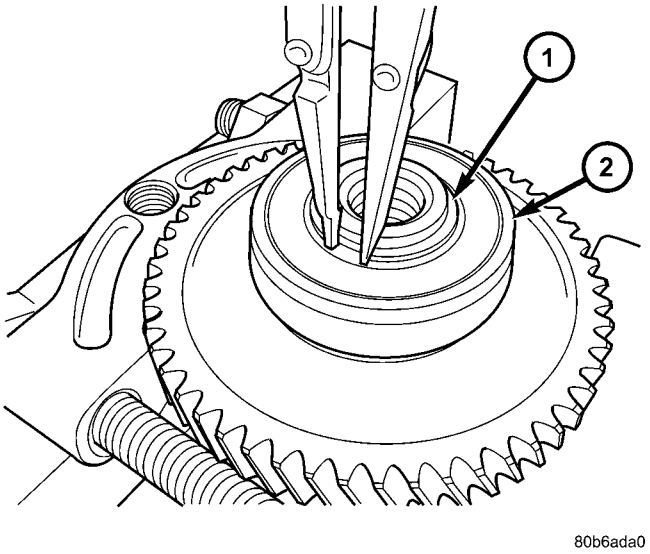

Fig. 173 Intermediate Shaft Bearing Snap Ring

1 - SNAP RING
2 - BEARING

SHIFT COVER

DESCRIPTION

The shift cover assembly (Fig. 174) (Fig. 175) is operated by the gearshift crossover and selector cables, and operates the shift fork/shaft system. It consists of crossover and selector lever mechanisms, transaxle vent, a main shift selector shaft, and the 5-R blockout mechanism. The shift cover is only serviced as an assembly.

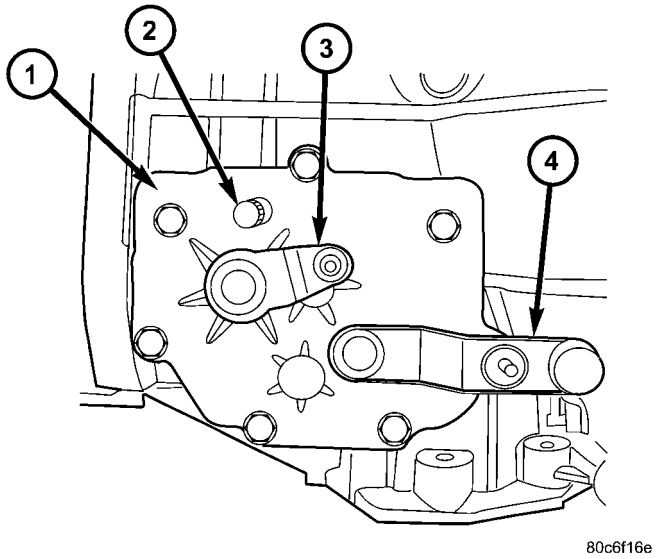

Fig. 174 Shift Lever Identification

1 - SHIFT COVER ASSEMBLY
2 - VENT
3 - CROSSOVER LEVER
4 - SELECTOR LEVER

SHIFT FORK AND SHAFT

DESCRIPTION

The T850 utilizes a unique shift fork and shaft arrangement consisting of three shift forks and two shafts as shown in (Fig. 176). This system is operated by the shift cover assembly, which combined with a unique gearshift cable design, offers a higher mechanical advantage over traditional shift systems. This arrangement results in less friction and lower shift cable loads for smoother, more positive operation. The shift fork assemblies are constructed of brass, float about the shafts with the aid of needle bearings, and are serviced only as fork/bearing assemblies.

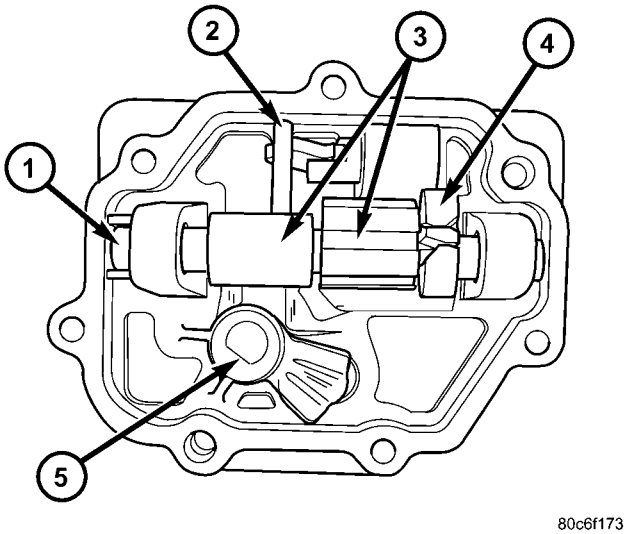

Fig. 175 Shift Cover Assembly Components

1 - SHAFT
2 - 5-R BLOCKOUT PIN/CAM
3 - SHIFT SELECTOR
4 - SHIFT BLOCKER
5 - SELECTOR LEVER/DETENT

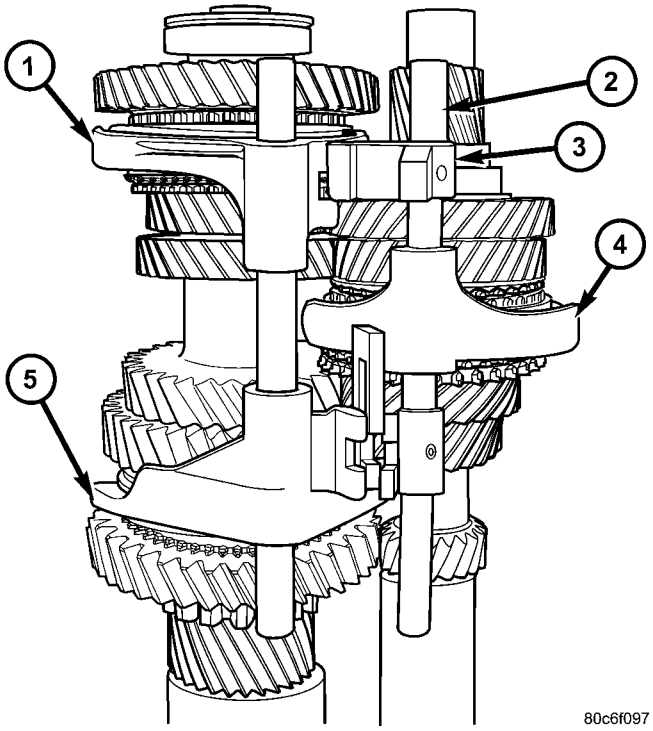

Fig. 176 Shift Fork/Shaft Components

1 - 5/R FORK
2 - SHAFT/LINK ASSEMBLY
3 - LINK
4 - 3/4 FORK
5 - 1/2 FORK

SYNCHRONIZER

DESCRIPTION

The T850 transaxle uses two styles of synchronizer assemblies; a conventional single-cone style is used for the 5th/Reverse and 3rd/4th applications (Fig. 177), and a dual-cone style for the 1st/2nd gear application (Fig. 178).

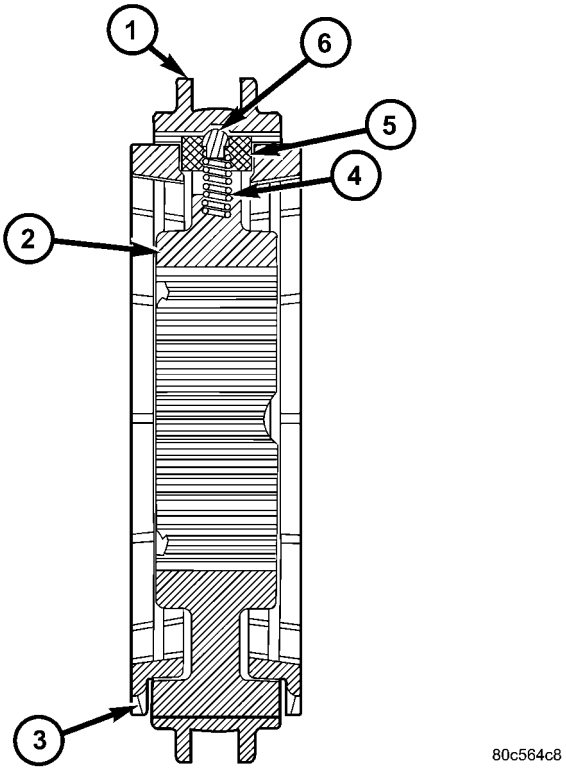

Fig. 177 3/4-5/R Synchronizer Assembly

1 - SLEEVE
2 - HUB
3 - BLOCKER RING (2)
4 - SPRING (3)
5 - KEY (3)
6 - BALL (3)

DISASSEMBLY

Place synchronizer in a clean shop towel and wrap. Press on inner hub. Carefully open up shop towel and remove springs, balls, keys, hub, and sleeve.

CLEANING

CLEAN

Do not attempt to clean the blocking rings in solvent. The friction material will become contaminated. Place synchronizer components in a suitable holder and clean with solvent. Air dry.

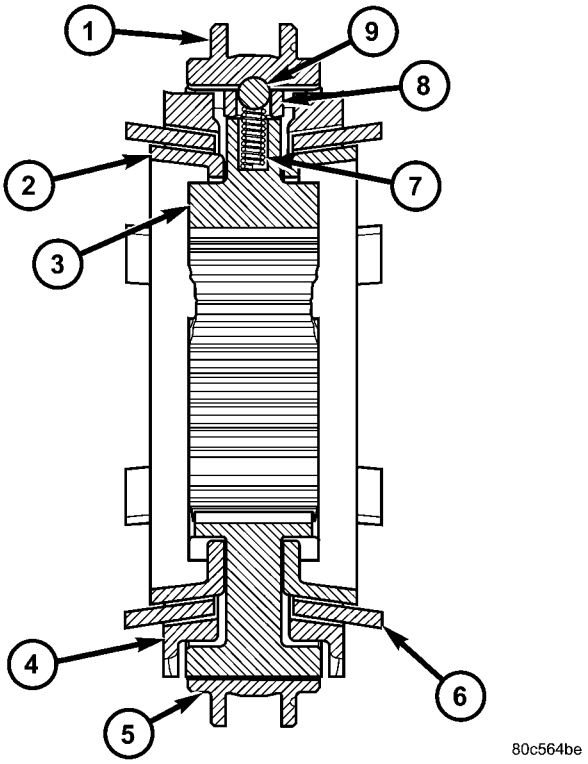

Fig. 178 1/2 Synchronizer Assembly

1 - SLEEVE
2 - REACTOR RING (2)
3 - HUB
4 - BLOCKER RING (2)
5 - SLEEVE
6 - FRICTION CONE (2)
7 - SPRING (3)
8 - KEY (3)
9 - BALL (3)

INSPECTION

INSPECT

Proper inspection of components involve:

- Teeth, for wear, scuffed, nicked, burred, or broken teeth
- Keys, for wear or distortion
- Balls and springs, for distortion, cracks, or wear

If any of these conditions exist in these components, replace as necessary.

ASSEMBLY

(1) Position synchronizer hub onto work bench. Hub is non-directional.

(2) Install springs into hub slot.

(3) Insert key into hub and spring.

(4) Apply petroleum jelly to the hole in the key. Insert balls into each key.

(5) Slide sleeve over the hub and depress balls as you carefully slip the sleeve into position.

41TE AUTOMATIC TRANSAXLE

TABLE OF CONTENTS

page

41TE AUTOMATIC TRANSAXLE
DESCRIPTION 110
OPERATION 112
DIAGNOSIS AND TESTING
DIAGNOSIS AND TESTING - 41TE TRANSAXLE GENERAL DIAGNOSIS 113
DIAGNOSIS AND TESTING - ROAD TEST . . 113
DIAGNOSIS AND TESTING - HYDRAULIC PRESSURE TESTS 114
DIAGNOSIS AND TESTING - CLUTCH AIR PRESSURE TESTS 116
DIAGNOSIS AND TESTING - TORQUE CONVERTER HOUSING FLUID LEAKAGE . . 117
REMOVAL 117
DISASSEMBLY 118
ASSEMBLY 136
INSTALLATION 158
SCHEMATICS AND DIAGRAMS
41TE TRANSAXLE HYDRAULIC SCHEMATICS 159
SPECIFICATIONS - 41TE TRANSAXLE 171
SPECIAL TOOLS 173
ACCUMULATOR
DESCRIPTION 179
OPERATION 179
AUTOSTICK SWITCH
DESCRIPTION 180
OPERATION 180
DRIVING CLUTCHES
DESCRIPTION 181
OPERATION 181
FINAL DRIVE
DESCRIPTION 181
OPERATION 182
DISASSEMBLY 182
ASSEMBLY 185
ADJUSTMENTS
DIFFERENTIAL BEARING PRELOAD MEASUREMENT AND ADJUSTMENT 186
FLUID
STANDARD PROCEDURE
FLUID LEVEL AND CONDITION CHECK . . . 188
STANDARD PROCEDURE - FLUID AND FILTER SERVICE 190
GEARSHIFT CABLE
REMOVAL 191
INSTALLATION 193
ADJUSTMENTS
GEARSHIFT LINKAGE ADJUSTMENT 193

page

GEARSHIFT MECHANISM
REMOVAL 194
INSTALLATION 196
HOLDING CLUTCHES
DESCRIPTION 197
OPERATION 197
INPUT CLUTCH ASSEMBLY
DISASSEMBLY 197
ASSEMBLY 204
OIL PUMP
DESCRIPTION 214
OPERATION 214
STANDARD PROCEDURE - OIL PUMP VOLUME CHECK 214
DISASSEMBLY 215
ASSEMBLY 216
PLANETARY GEARTRAIN
DESCRIPTION 216
OPERATION 216
SEAL - OIL PUMP
REMOVAL 217
INSTALLATION 217
SHIFT INTERLOCK CABLE
DESCRIPTION 217
OPERATION 217
REMOVAL 218
INSTALLATION 220
ADJUSTMENTS
BRAKE/TRANSMISSION SHIFT INTERLOCK CABLE VERIFICATION AND ADJUSTMENT . 221
SHIFT INTERLOCK MECHANISM
REMOVAL 223
INSTALLATION 223
SOLENOID/PRESSURE SWITCH ASSY
DESCRIPTION 223
OPERATION 224
REMOVAL 225
INSTALLATION 226
SPEED SENSOR - INPUT
DESCRIPTION 226
OPERATION 227
REMOVAL 227
INSTALLATION 228
SPEED SENSOR - OUTPUT
DESCRIPTION 228
OPERATION 229
REMOVAL 229
INSTALLATION 230

TORQUE CONVERTER
DESCRIPTION 230
OPERATION 234
REMOVAL 235
INSTALLATION 236
TRANSMISSION CONTROL RELAY
DESCRIPTION 236
OPERATION 236
TRANSMISSION RANGE SENSOR
DESCRIPTION 237
OPERATION 237
REMOVAL 238
INSTALLATION 238
TRD LINK
DESCRIPTION 238
OPERATION 238
VALVE BODY
DESCRIPTION 239
OPERATION 239
REMOVAL 240
DISASSEMBLY 242
ASSEMBLY 246
INSTALLATION 251

41TE AUTOMATIC TRANSAXLE

DESCRIPTION

The 41TE (Fig. 1) is a four-speed transaxle that is a conventional hydraulic/mechanical assembly with an integral differential, and is controlled with adaptive electronic controls and monitors. The hydraulic system of the transaxle consists of the transaxle fluid, fluid passages, hydraulic valves, and various line pressure control components. An input clutch assembly which houses the underdrive, overdrive, and reverse clutches is used. It also utilizes separate holding clutches: 2nd/4th gear and Low/Reverse. The primary mechanical components of the transaxle consist of the following:

- Three multiple disc input clutches
- Two multiple disc holding clutches
- Four hydraulic accumulators
- Two planetary gear sets
- Hydraulic oil pump
- Valve body
- Solenoid/Pressure switch assembly
- Integral differential assembly

Control of the transaxle is accomplished by fully adaptive electronics. Optimum shift scheduling is accomplished through continuous real-time sensor feedback information provided to the Powertrain Control Module (PCM) or Transmission Control Module (TCM).

The PCM/TCM is the heart of the electronic control system and relies on information from various direct and indirect inputs (sensors, switches, etc.) to determine driver demand and vehicle operating conditions. With this information, the PCM/TCM can calculate and perform timely and quality shifts through various output or control devices (solenoid pack, transmission control relay, etc.).

The PCM/TCM also performs certain self-diagnostic functions and provides comprehensive information (sensor data, DTC's, etc.) which is helpful in proper diagnosis and repair. This information can be viewed with the DRB scan tool.

41TE AUTOMATIC TRANSAXLE (Continued)

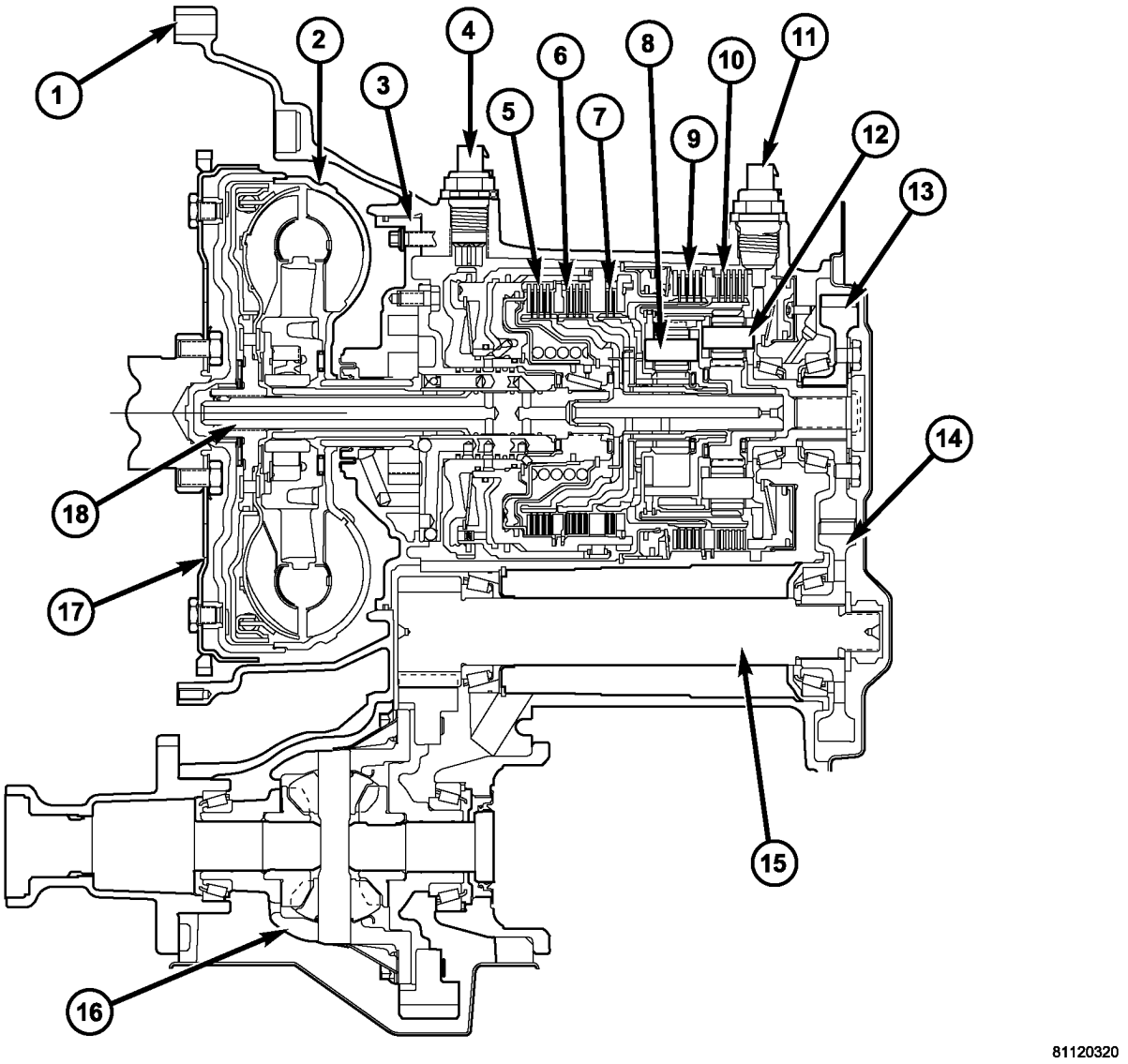

Fig. 1 41TE Automatic Transaxle

1 - TRANSAXLE CASE
2 - TORQUE CONVERTER
3 - OIL PUMP
4 - INPUT SPEED SENSOR
5 - UNDERDRIVE CLUTCH
6 - OVERDRIVE CLUTCH
7 - REVERSE CLUTCH
8 - FRONT PLANET CARRIER
9 - 2/4 CLUTCH
10 - L/R CLUTCH
11 - OUTPUT SPEED SENSOR
12 - REAR PLANET CARRIER/OUTPUT SHAFT
13 - OUTPUT SHAFT GEAR
14 - TRANSFER SHAFT GEAR
15 - TRANSFER SHAFT
16 - DIFFERENTIAL
17 - CONVERTER DRIVE PLATE
18 - INPUT SHAFT

41TE AUTOMATIC TRANSAXLE (Continued)

TRANSAXLE IDENTIFICATION

The 41TE transaxle is identified by a barcode label that is fixed to the transaxle case as shown in (Fig. 2).

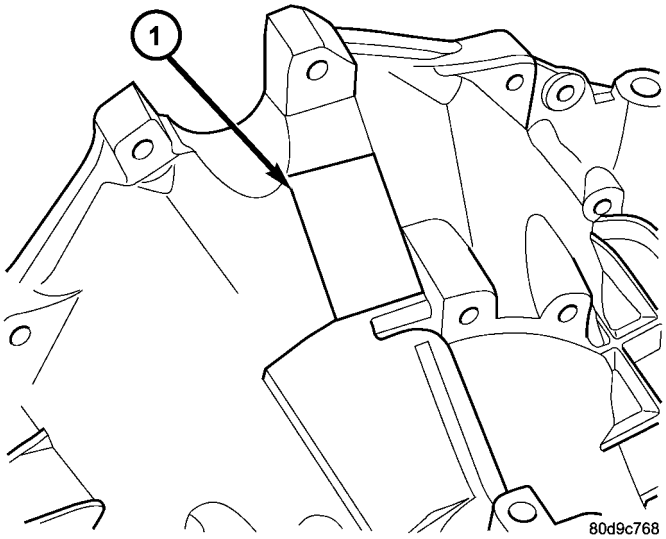

Fig. 2 Transaxle Identification Label

1 - IDENTIFICATION LABEL

The label contains a series of digits that can be translated into useful information such as transaxle part number, date of manufacture, manufacturing origin, plant shift number, build sequence number, etc. Refer to (Fig. 3) for identification label breakdown.

If the tag is not legible or missing, the “PK” number, which is stamped into the transaxle case behind the transfer gear cover, can be referred to for identification. This number differs slightly in that it contains the entire transaxle part number, rather than the last three digits.

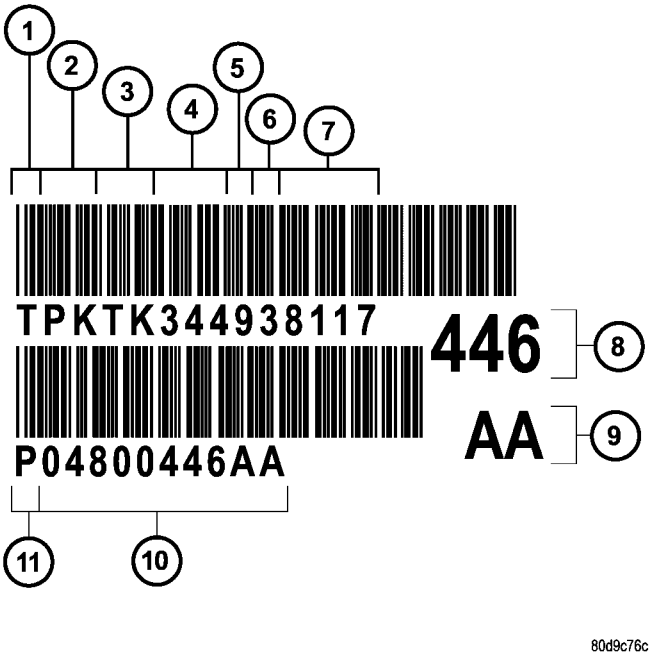

Fig. 3 Identification Label Breakdown

1 - T=TRACEABILITY
2 - SUPPLIER CODE (PK=KOKOMO)
3 - COMPONENT CODE (TK=KOKOMO TRANSMISSION)
4 - BUILD DAY (344=DEC. 9)
5 - BUILD YEAR (9=1999)
6 - LINE/SHIFT CODE (3=3RD SHIFT)
7 - BUILD SEQUENCE NUMBER
8 - LAST THREE OF P/N
9 - ALPHA
10 - TRANSAXLE PART NUMBER
11 - P=PART NUMBER

OPERATION

Transmission output is directed to an integral differential by a transfer gear system in the following input-to-output ratios:

First	2.84 : 1
Second	1.57 : 1
Third	1.00 : 1
Overdrive	0.69 : 1
Reverse	2.21 : 1

41TE AUTOMATIC TRANSAXLE (Continued)

DIAGNOSIS AND TESTING

DIAGNOSIS AND TESTING - 41TE TRANSAXLE GENERAL DIAGNOSIS

NOTE: Before attempting any repair on a 41TE four-speed automatic transaxle, check for diagnostic trouble codes (DTC's) using the DRB scan tool. Refer to the Transmission Diagnostic Procedures Manual.

Transaxle malfunctions may be caused by these general conditions:

- Poor engine performance
- Improper adjustments
- Hydraulic malfunctions
- Mechanical malfunctions
- Electronic malfunctions

Diagnosis of these problems should always begin by checking the easily accessible variables: fluid level and condition, gearshift cable adjustment. Then perform a road test to determine if the problem has been corrected or that more diagnosis is necessary. If the problem persists after the preliminary tests and corrections are completed, hydraulic pressure checks should be performed.

DIAGNOSIS AND TESTING - ROAD TEST

Prior to performing a road test, verify that the fluid level, fluid condition, and linkage adjustment have been approved.

During the road test, the transaxle should be operated in each position to check for slipping and any variation in shifting.

If the vehicle operates properly at highway speeds, but has poor acceleration, the converter stator overrunning clutch may be slipping. If acceleration is normal, but high throttle opening is needed to maintain highway speeds, the converter stator clutch may have seized. Both of these stator defects require replacement of the torque converter and thorough transaxle cleaning.

Slipping clutches can be isolated by comparing the "Elements in Use" chart with clutch operation encountered on a road test. This chart identifies which clutches are applied at each position of the selector lever.

A slipping clutch may also set a DTC and can be determined by operating the transaxle in all selector positions.

ELEMENTS IN USE AT EACH POSITION OF SELECTOR LEVER

Shift Lever Position	INPUT CLUTCHES			HOLDING CLUTCHES	
	Underdrive	Overdrive	Reverse	2/4	Low/Reverse
P - PARK					X
R - REVERSE			X		X
N - NEUTRAL					X
OD - OVERDRIVE					
First	X				X
Second	X			X	
Direct	X	X			
Overdrive		X		X	
D - DRIVE*					
First	X				X
Second	X			X	
Direct	X	X			
L - LOW*					
First	X				X
Second	X			X	
Direct	X	X			

* Vehicle upshift and downshift speeds are increased when in these selector positions.

The process of elimination can be used to detect any unit which slips and to confirm proper operation of good units. Road test analysis can diagnose slipping units, but the cause of the malfunction cannot be determined. Practically any condition can be caused by leaking hydraulic circuits or sticking valves.

41TE AUTOMATIC TRANSAXLE (Continued)

DIAGNOSIS AND TESTING - HYDRAULIC PRESSURE TESTS

Pressure testing is a very important step in the diagnostic procedure. These tests usually reveal the cause of most hydraulic transaxle problems.

Before performing pressure tests, be certain that fluid level and condition, and shift cable adjustments have been checked and approved. Fluid must be at operating temperature (150 to 200 degrees F.).

Install an engine tachometer, raise vehicle on hoist which allows front wheels to turn, and position tachometer so it can be read.

Attach 300 psi gauge (C-3293SP) to port(s) required for test(s) being conducted. Use adapter set L-4559 to adapt gauge(s) to transaxle.

Test port locations are shown in (Fig. 4).

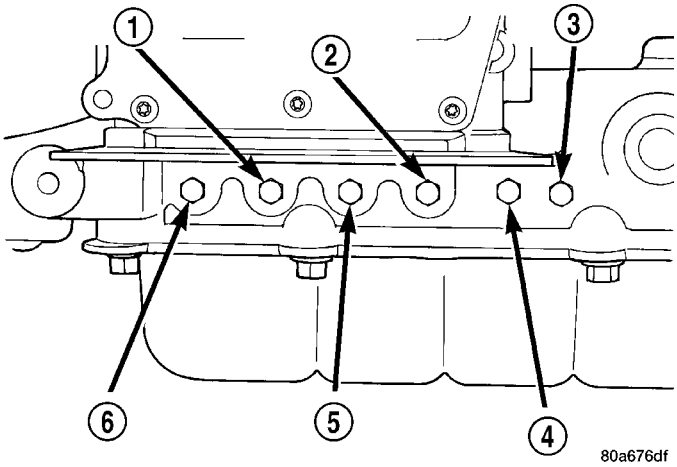

Fig. 4 Pressure Taps

1 - OVERDRIVE CLUTCH
2 - TORQUE CONVERTER OFF
3 - LOW/REVERSE CLUTCH
4 - 2/4 CLUTCH
5 - REVERSE CLUTCH
6 - UNDERDRIVE CLUTCH

TEST ONE-SELECTOR IN LOW (1st GEAR)

(1) Attach pressure gauge to the low/reverse clutch tap.

(2) Move selector lever to the (L) position.

(3) Allow vehicle wheels to turn and increase throttle opening to achieve an indicated vehicle speed to 20 mph.

(4) Low/reverse clutch pressure should read 115 to 145 psi.

(5) This test checks pump output, pressure regulation and condition of the low/reverse clutch hydraulic circuit and shift schedule.

TEST TWO-SELECTOR IN DRIVE (2nd GEAR)

NOTE: This test checks the underdrive clutch hydraulic circuit as well as the shift schedule.

(1) Attach gauge to the underdrive clutch tap.

(2) Move selector lever to the 3 position.

(3) Allow vehicle wheels to turn and increase throttle opening to achieve an indicated vehicle speed of 30 mph.

(4) In second gear the underdrive clutch pressure should read 110 to 145 psi.

TEST TWO A–SELECTOR IN OD (4th Gear)

NOTE: This test checks the underdrive clutch hydraulic circuit as well as the shift schedule.

(1) Attach gauge to the underdrive clutch tap.

(2) Move selector lever to the (OD) position.

(3) Allow wheels to rotate freely and increase throttle opening to achieve an indicated speed of 40 mph.

(4) Underdrive clutch pressure should read below 5 psi. If not, then either the solenoid assembly or PCM/TCM is at fault.

TEST THREE-OVERDRIVE CLUTCH CHECK (3rd and 2nd Gear)

(1) Attach gauge to the overdrive clutch tap.

(2) Move selector lever to the (OD) position.

(3) Allow vehicle wheels to turn and increase throttle opening to achieve an indicated vehicle speed of 20 mph. Vehicle should be in 3rd gear.

(4) Overdrive clutch pressure should read 74 to 95 psi.

(5) Move selector lever to the (3) position and increase indicated vehicle speed to 30 mph.

(6) The vehicle should be in second gear and overdrive clutch pressure should be less than 5 psi.

(7) This test checks the overdrive clutch hydraulic circuit as well as the shift schedule.

TEST FOUR-SELECTOR IN OVERDRIVE (4th Gear)

(1) Attach gauge to the 2/4 clutch tap.

(2) Move selector lever to the (OD) position.

(3) Allow vehicle front wheels to turn and increase throttle opening to achieve an indicated vehicle speed of 30 mph. Vehicle should be in 4th gear.

(4) The 2/4 clutch pressure should read 75 to 95 psi.

(5) This test checks the 2/4 clutch hydraulic circuit.

TEST FIVE-SELECTOR IN OVERDRIVE (4th Gear-CC on)

(1) Attach gauge to the torque converter clutch off pressure tap.

(2) Move selector lever to the (OD) position.

41TE AUTOMATIC TRANSAXLE (Continued)

(3) Allow vehicle wheels to turn and increase throttle opening to achieve an indicated vehicle speed of 50 mph. Vehicle should be in 4th gear, CC on.

CAUTION: Both wheels must turn at the same speed.

(4) Torque converter clutch off pressure should be less than 5 psi.

(5) This test checks the torque converter clutch hydraulic circuit.

TEST SIX-SELECTOR IN REVERSE

(1) Attach gauges to the reverse and LR clutch tap.

(2) Move selector lever to the (R) position.

(3) Read reverse clutch pressure with output stationary (foot on brake) and throttle opened to achieve 1500 rpm.

(4) Reverse and LR clutch pressure should read 165 to 235 psi.

(5) This test checks the reverse clutch hydraulic circuit.

TEST RESULT INDICATIONS

(1) If proper line pressure is found in any one test, the pump and pressure regulator are working properly.

(2) Low pressure in all positions indicates a defective pump, a clogged filter, or a stuck pressure regulator valve.

(3) Clutch circuit leaks are indicated if pressures do not fall within the specified pressure range.

(4) If the overdrive clutch pressure is greater than 5 psi in Step 4 of Test Three, a worn reaction shaft seal ring or a defective solenoid assembly is indicated.

(5) If the underdrive clutch pressure is greater than 5 psi in Step 4 of Test Two A, a defective solenoid assembly or PCM/TCM is the cause.

PRESSURE CHECK SPECIFICATIONS

Gear Selector Position	Actual Gear	Pressure Taps					
		Underdrive Clutch	Overdrive Clutch	Reverse Clutch	Torque Converter Clutch Off	2/4 Clutch	Low/ Reverse Clutch
Park * 0 mph	PARK	0-2	0-5	0-2	60-110	0-2	115-145
REVERSE * 0 mph	REVERSE	0-2	0-7	165-235	50-100	0-2	165-235
NEUTRAL * 0 mph	NEUTRAL	0-2	0-5	0-2	60-110	0-2	115-145
L # 20 mph	FIRST	110-145	0-5	0-2	60-110	0-2	115-145
3 # 30 mph	SECOND	110-145	0-5	0-2	60-110	115-145	0-2
3 # 45 mph	DIRECT	75-95	75-95	0-2	60-90	0-2	0-2
OD # 30 mph	OVERDRIVE	0-2	75-95	0-2	60-90	75-95	0-2
OD # 50 mph	OVERDRIVE WITH TCC	0-2	75-95	0-2	0-5	75-95	0-2

*** Engine speed at 1500 rpm**

 # CAUTION: Both front wheels must be turning at the same speed.

41TE AUTOMATIC TRANSAXLE (Continued)

DIAGNOSIS AND TESTING - CLUTCH AIR PRESSURE TESTS

Inoperative clutches can be located using a series of tests by substituting air pressure for fluid pressure (Fig. 5) (Fig. 6). The clutches may be tested by applying air pressure to their respective passages. The valve body must be removed and Tool 6056 installed. To make air pressure tests, proceed as follows:

NOTE: The compressed air supply must be free of all dirt and moisture. Use a pressure of 30 psi.

Remove oil pan and valve body. See Valve body removal.

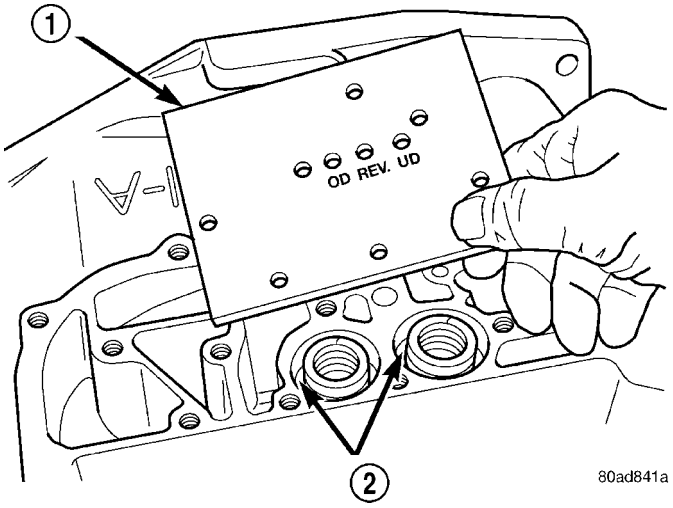

Fig. 5 Air Pressure Test Plate

1 - TOOL 6056
2 - ACCUMULATORS

OVERDRIVE CLUTCH

Apply air pressure to the overdrive clutch apply passage and watch for the push/pull piston to move forward. The piston should return to its starting position when the air pressure is removed.

REVERSE CLUTCH

Apply air pressure to the reverse clutch apply passage and watch for the push/pull piston to move rearward. The piston should return to its starting position when the air pressure is removed.

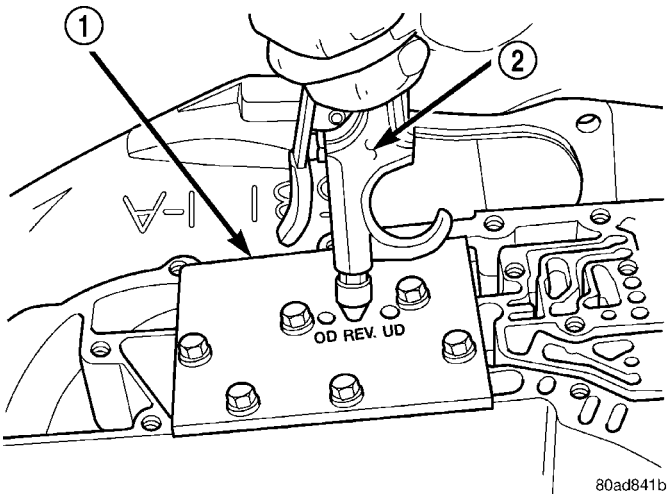

Fig. 6 Testing Reverse Clutch

1 - TOOL 6056
2 - AIR NOZZLE

2/4 CLUTCH

Apply air pressure to the feed hole located on the 2/4 clutch retainer. Look in the area where the 2/4 piston contacts the first separator plate and watch carefully for the 2/4 piston to move rearward. The piston should return to its original position after the air pressure is removed.

LOW/REVERSE CLUTCH

Apply air pressure to the low/reverse clutch feed hole (rear of case, between 2 bolt holes). Then, look in the area where the low/reverse piston contacts the first separator plate. Watch carefully for the piston to move forward. The piston should return to its original position after the air pressure is removed.

UNDERDRIVE CLUTCH

Because this clutch piston cannot be seen, its operation is checked by function. Air pressure is applied to the low/reverse and the 2/4 clutches. This locks the output shaft. Use a piece of rubber hose wrapped around the input shaft and a pair of clamp-on pliers to turn the input shaft. Next apply air pressure to the underdrive clutch. The input shaft should not rotate with hand torque. Release the air pressure and confirm that the input shaft will rotate.

41TE AUTOMATIC TRANSAXLE (Continued)

DIAGNOSIS AND TESTING - TORQUE CONVERTER HOUSING FLUID LEAKAGE

When diagnosing converter housing fluid leaks, three actions must be taken before repair:

(1) Verify proper transmission fluid level.

(2) Verify that the leak originates from the converter housing area and is transmission fluid.

(3) Determine the true source of the leak.

Fluid leakage at or around the torque converter area may originate from an engine oil leak (Fig. 7). The area should be examined closely. Factory fill fluid is red and, therefore, can be distinguished from engine oil.

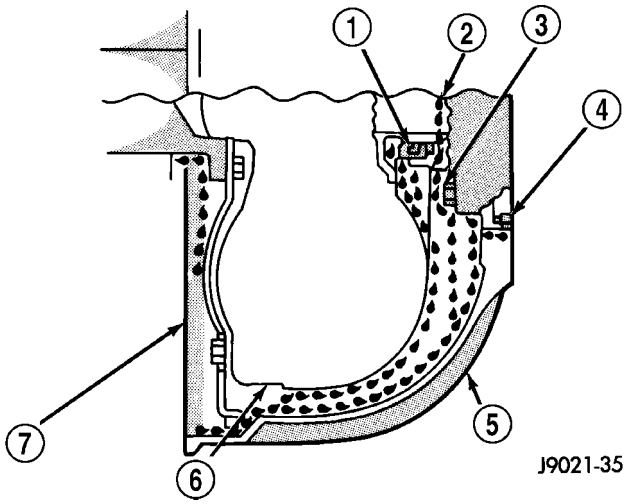

Fig. 7 Converter Housing Leak Paths

1 - PUMP SEAL
2 - PUMP VENT
3 - PUMP BOLT
4 - PUMP GASKET
5 - CONVERTER HOUSING
6 - CONVERTER
7 - REAR MAIN SEAL LEAK

Some suspected converter housing fluid leaks may not be leaks at all. They may only be the result of residual fluid in the converter housing, or excess fluid spilled during factory fill, or fill after repair. Converter housing leaks have several potential sources. Through careful observation, a leak source can be identified before removing the transmission for repair.

Pump seal leaks tend to move along the drive hub and onto the rear of the converter (Fig. 7). Pump o-ring or pump body leaks follow the same path as a seal leak. Pump attaching bolt leaks are generally deposited on the inside of the converter housing and not on the converter itself. Pump seal or gasket leaks usually travel down the inside of the converter housing (Fig. 7).

TORQUE CONVERTER LEAKAGE

Possible sources of torque converter leakage are:

- Torque converter weld leaks at the outside diameter weld (Fig. 8).
- Torque converter hub weld (Fig. 8).

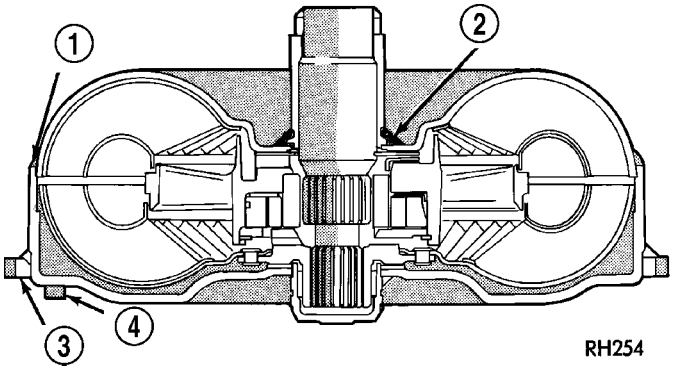

Fig. 8 Converter Leak Points - Typical

1 - OUTSIDE DIAMETER WELD
2 - TORQUE CONVERTER HUB WELD
3 - STARTER RING GEAR
4 - LUG

REMOVAL

NOTE: If transaxle assembly is being replaced or overhauled (clutch and/or seal replacement), it is necessary to perform the TCM Quick Learn Procedure. (Refer to 8 - ELECTRICAL/ELECTRONIC CONTROL MODULES/TRANSMISSION CONTROL MODULE - STANDARD PROCEDURE)

(1) Disconnect battery cable.

(2) Remove air cleaner assembly.

(3) Remove dipstick tube. Plug hole to prevent debris from entering transaxle.

(4) Using a blade or suitable hose cutter, cut transaxle oil cooler lines off flush with fittings. Plug lines and fittings to prevent debris from entering transaxle or cooler circuit. A service splice kit will be installed upon reassembly.

(5) Disconnect Solenoid/Pressure Switch Assy. connector.

(6) Disconnect Transmission Range Sensor connector.

(7) Disconnect Input Speed Sensor connector.

(8) Disconnect Output Speed Sensor connector.

(9) Disconnect shift cable from manual valve lever and bracket.

(10) Disconnect Crankshaft Position Sensor.

(11) Remove throttle body support bracket.

(12) Disconnect Oxygen Sensor harness retainer from transaxle case.

(13) Remove rear mount bracket-to-transaxle case bolts.

(14) Remove starter upper bracket-to-block bolt.

41TE AUTOMATIC TRANSAXLE (Continued)

(15) Raise vehicle.
(16) Remove halfshafts. Refer to Differential and Driveline.
(17) Remove rear mount bracket lower bolt.
(18) Remove rear mount thru-bolt.
(19) Remove rear mount-to-cross member bolts.
(20) Remove rear mount and bracket.
(21) Remove front mount thru-bolt.
(22) Remove front mount to radiator lower cross-member bolts.
(23) Remove front mount bracket to block and transaxle.
(24) Remove front mount bracket and mount.
(25) Remove starter lower bolt and starter motor assembly.
(26) Remove converter dust shield.
(27) Remove torque converter bolts.
(28) Support engine/transaxle with screw jack and wood block on engine oil pan.
(29) Remove left mount bracket-to-transaxle bolts.
(30) Carefully lower engine/transaxle assembly to gain access to and remove transaxle-to-engine bolts.
(31) With aid of helper or transmission jack, remove transaxle assembly from vehicle.

DISASSEMBLY

NOTE: If transaxle is being overhauled (clutch and/or seal replacement) or replaced, it is necessary to perform the PCM/TCM Quick Learn Procedure. (Refer to 8 - ELECTRICAL/ELECTRONIC CONTROL MODULES/POWERTRAIN/TRANSMISSION CONTROL MODULE - STANDARD PROCEDURE)

NOTE: This procedure does not include final drive (differential) disassembly.

(1) Remove input and output speed sensors.
(2) Remove three (3) solenoid/pressure switch assembly-to-case bolts.
(3) Remove solenoid/pressure switch assembly and gasket (Fig. 9).
(4) Remove oil pan-to-case bolts (Fig. 10).

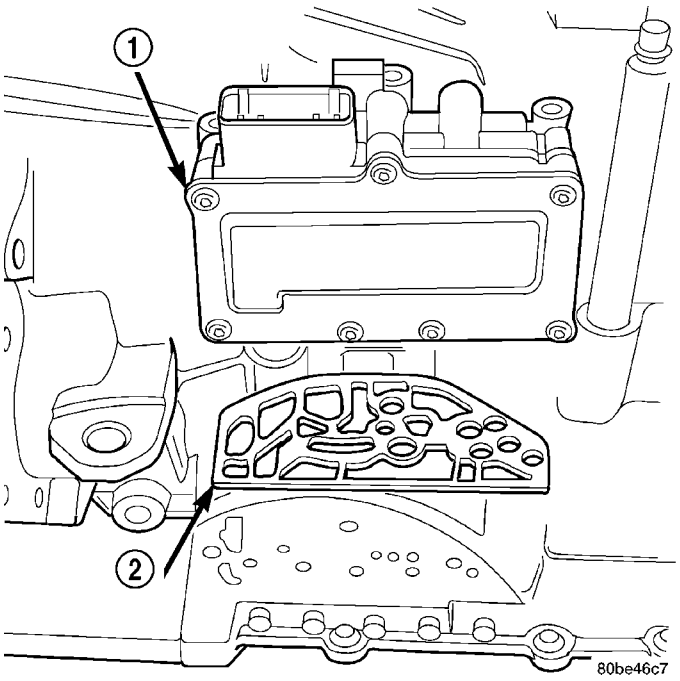

Fig. 9 Solenoid/Pressure Switch Assembly and Gasket

1 - SOLENOID/PRESSURE SWITCH ASSEMBLY
2 - GASKET

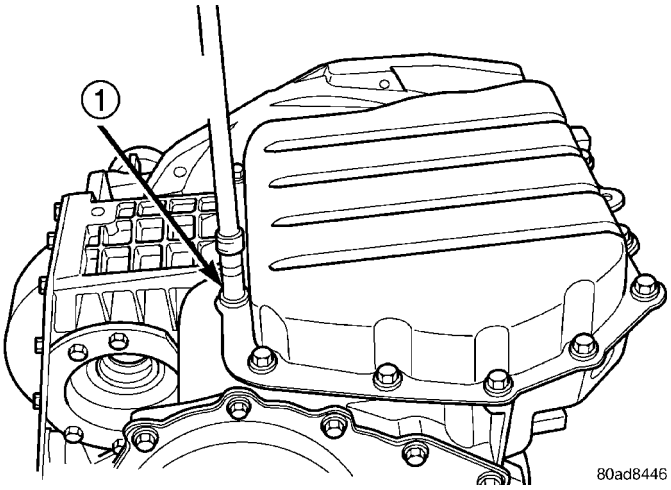

Fig. 10 Remove Oil Pan Bolts

1 - OIL PAN BOLTS (USE RTV UNDER BOLT HEADS)

41TE AUTOMATIC TRANSAXLE (Continued)

(5) Remove oil pan (Fig. 11).

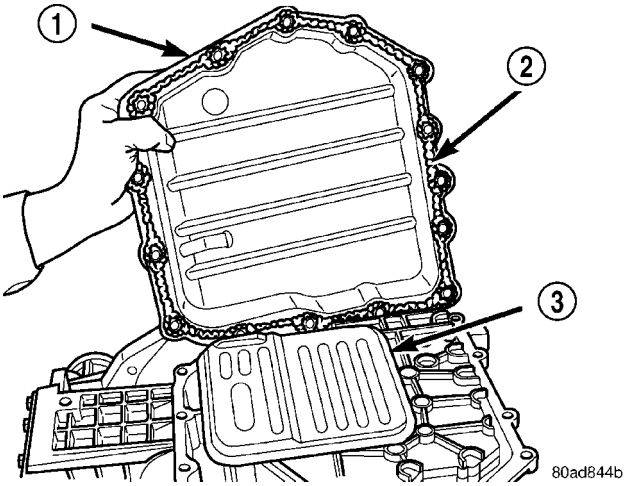

Fig. 11 Remove Oil Pan

1 - OIL PAN
2 - 1/8 INCH BEAD OF MOPAR® ATF RTV (MS-GF41)
3 - OIL FILTER

(6) Remove oil filter (Fig. 12).

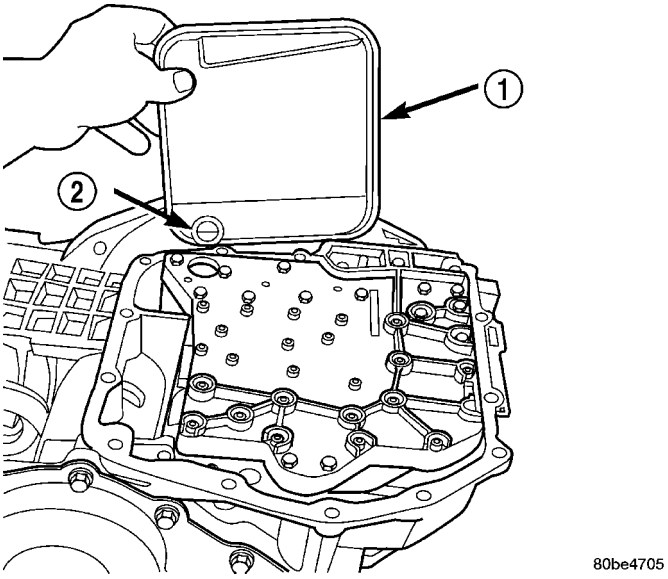

Fig. 12 Remove Oil Filter

1 - OIL FILTER
2 - O-RING

(7) Turn manual valve fully clock-wise to get park rod into position for removal.

(8) Remove valve body-to-case bolts (Fig. 13).

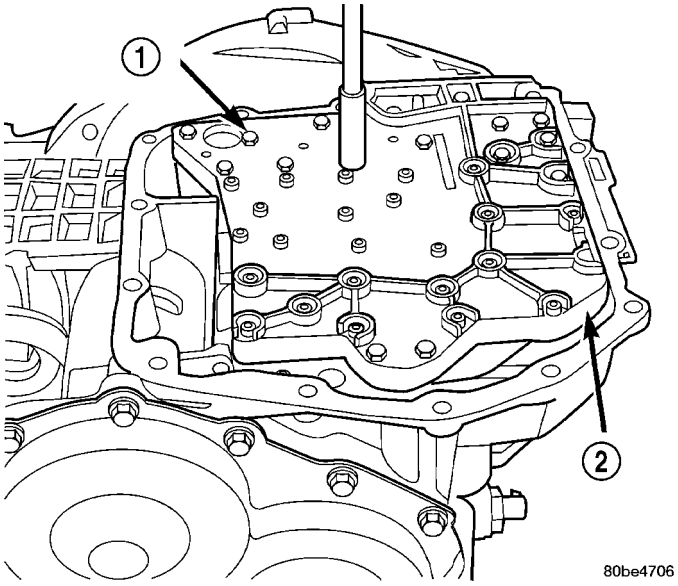

Fig. 13 Remove Valve Body Attaching Bolts

1 - VALVE BODY ATTACHING BOLTS (18)
2 - VALVE BODY

CAUTION: Do not handle the valve body assembly from the manual valve. Damage can result.

(9) Using a screwdriver, push park rod rollers away from guide bracket (Fig. 14) and remove valve body assembly (Fig. 15).

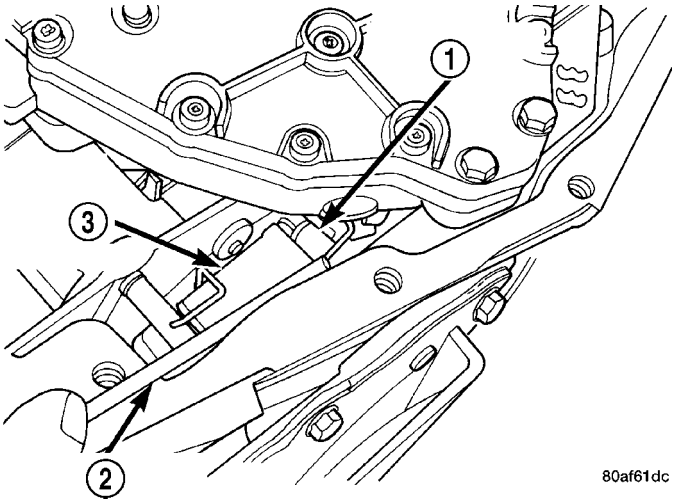

Fig. 14 Push Park Rod Rollers from Guide Bracket

1 - PARK SPRAG ROLLERS
2 - SCREWDRIVER
3 - PARK SPRAG GUIDE BRACKET

41TE AUTOMATIC TRANSAXLE (Continued)

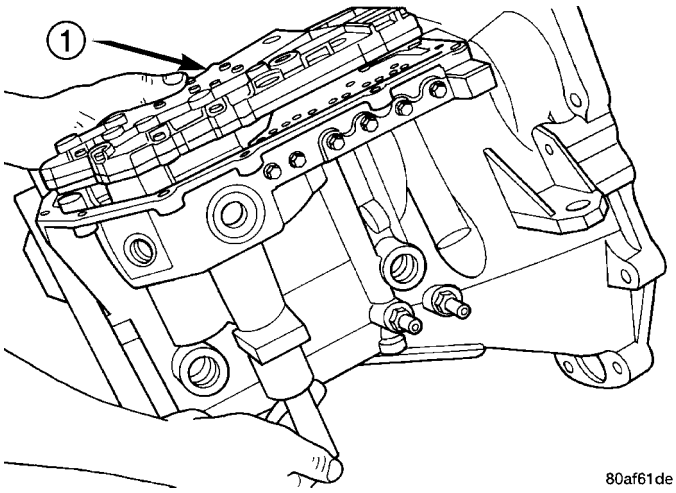

Fig. 15 Remove Valve Body

1 - VALVE BODY

NOTE: Depending on engine application, some accumulators will have two springs and others will have one spring. The springs are color-coded according to application and year. When disassembling, mark accumulator spring location to ease assembly.

(10) Remove underdrive and overdrive accumulators (Fig. 16) (Fig. 17) (Fig. 18).

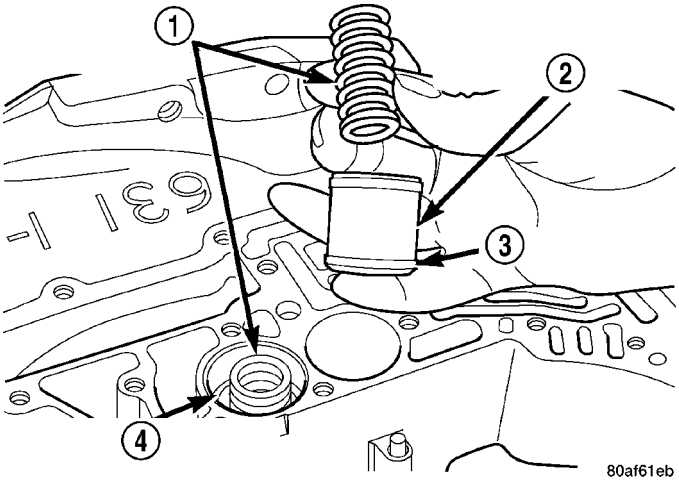

Fig. 16 Remove Underdrive and Overdrive Accumulators

1 - RETURN SPRING
2 - UNDERDRIVE CLUTCH ACCUMULATOR
3 - SEAL RING (2)
4 - OVERDRIVE CLUTCH ACCUMULATOR

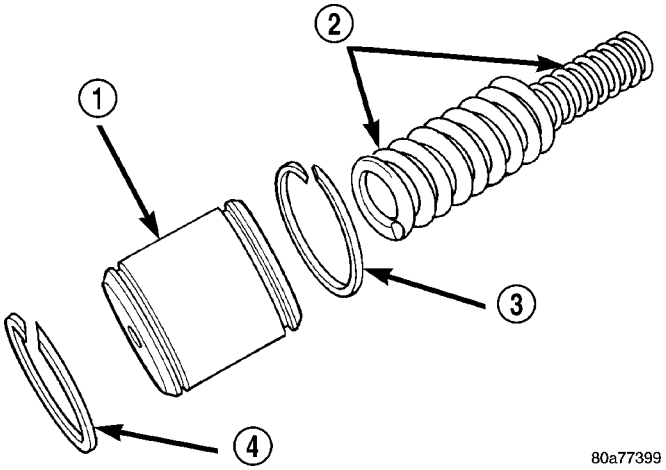

Fig. 17 Accumulator (Underdrive)

1 - ACCUMULATOR PISTON (UNDERDRIVE)
2 - RETURN SPRINGS
3 - SEAL RING
4 - SEAL RING

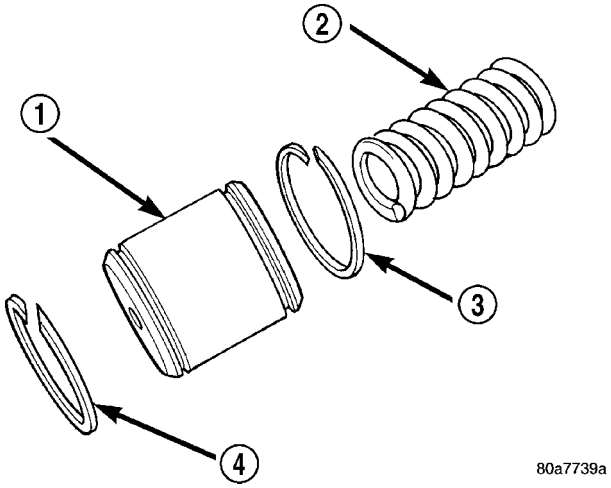

Fig. 18 Accumulator (Overdrive)

1 - ACCUMULATOR PISTON (OVERDRIVE)
2 - RETURN SPRING
3 - SEAL RING
4 - SEAL RING

41TE AUTOMATIC TRANSAXLE (Continued)

(11) Remove low/reverse accumulator snap ring (Fig. 19).

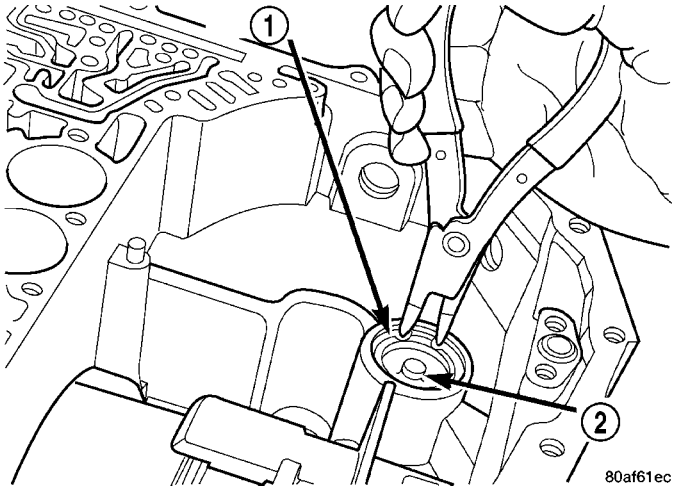

Fig. 19 Remove Low/Reverse Accumulator Snap Ring

1 - SNAP RING
2 - PLUG

(12) Remove low/reverse accumulator plug (Fig. 20).

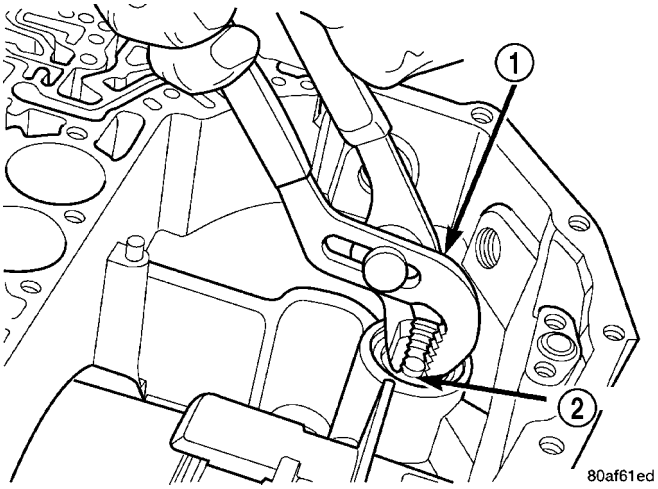

Fig. 20 Remove Low/Reverse Accumulator Plug (Cover)

1 - ADJUSTABLE PLIERS
2 - PLUG

(13) Remove low/reverse accumulator piston using petrolatum and a suitable tool (Fig. 21).

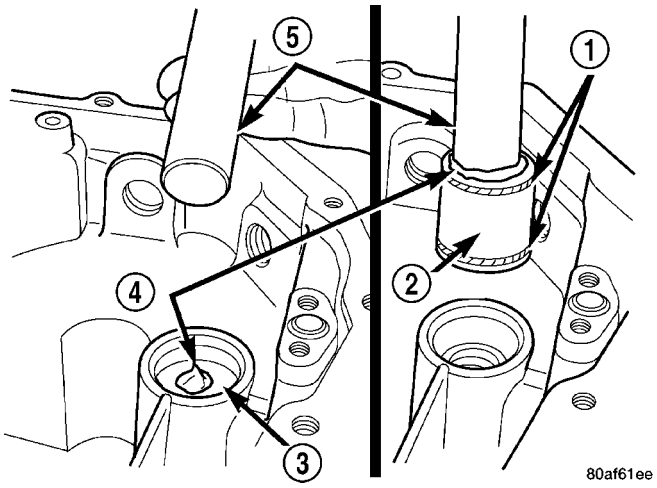

Fig. 21 Remove Low/Reverse Accumulator Piston

1 - SEAL RINGS
2 - PISTON
3 - PISTON
4 - PETROLATUM
5 - SUITABLE TOOL

(14) Remove low/reverse accumulator (Fig. 22).

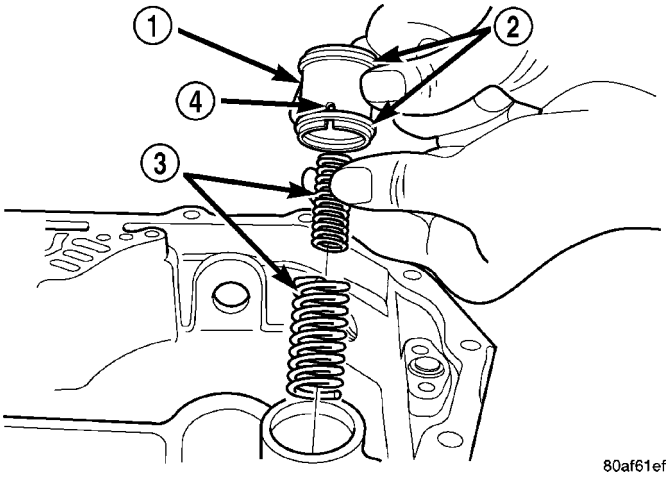

Fig. 22 Remove Low/Reverse Accumulator

1 - ACCUMULATOR PISTON
2 - SEAL RINGS
3 - RETURN SPRINGS
4 - (NOTE NOTCH)

41TE AUTOMATIC TRANSAXLE (Continued)

(15) Measure input shaft end play. Place transaxle so input shaft is vertical. Set up end play set and dial indicator as shown in (Fig. 23). **Input shaft end play should be within 0.13-0.64 mm (0.005-0.025 in.)** If outside of this range, a #4 thrust plate change is required. Record indicator reading for reference upon reassembly.

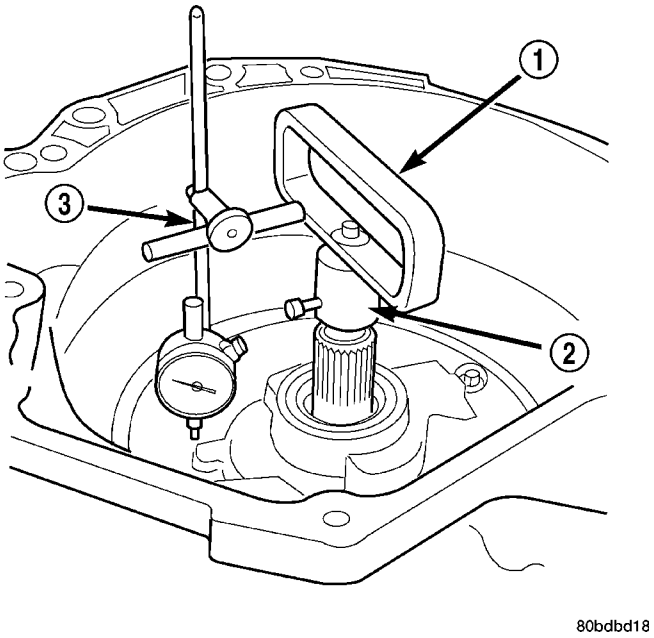

Fig. 23 Measure Input Shaft End Play Using End Play Set 8266

1 - TOOL 8266–8
2 - TOOL 8266–2
3 - TOOL C-3339

(16) Remove oil pump-to-case bolts (Fig. 24).

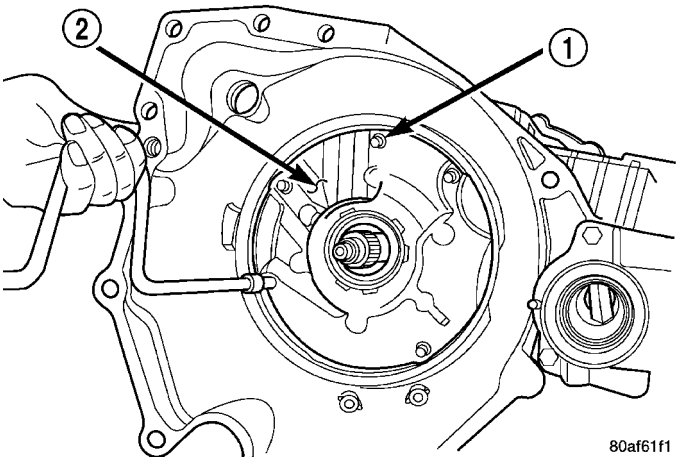

Fig. 24 Remove Pump Attaching Bolts

1 - PUMP ATTACHING BOLTS
2 - PUMP HOUSING

CAUTION: Be sure input speed sensor is removed before removing oil pump.

(17) Install pullers Tool C-3752 as shown in (Fig. 25).

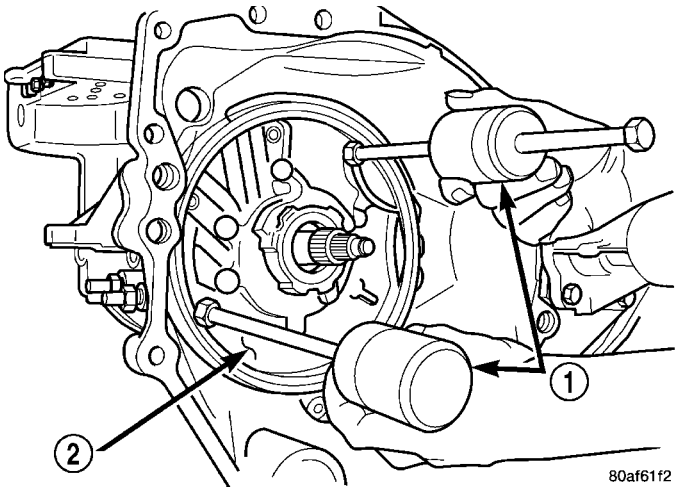

Fig. 25 Install Tool C-3752

1 - PULLERS TOOL C-3752
2 - PUMP

(18) Remove oil pump assembly (Fig. 26) (Fig. 27).

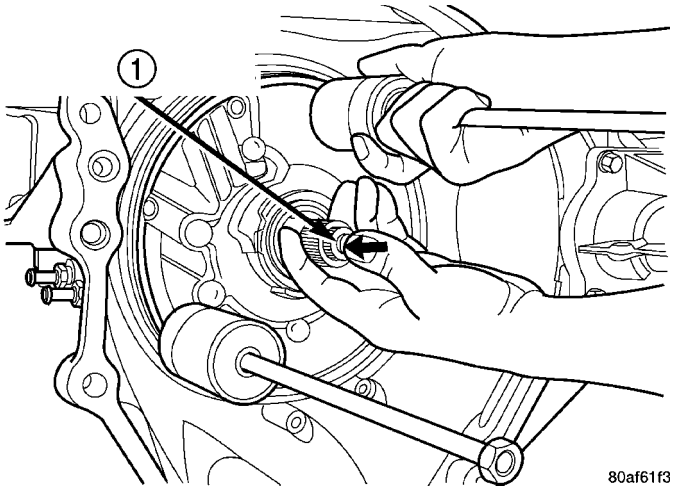

Fig. 26 Remove Oil Pump

1 - “PUSH IN” ON INPUT SHAFT WHILE REMOVING PUMP

41TE AUTOMATIC TRANSAXLE (Continued)

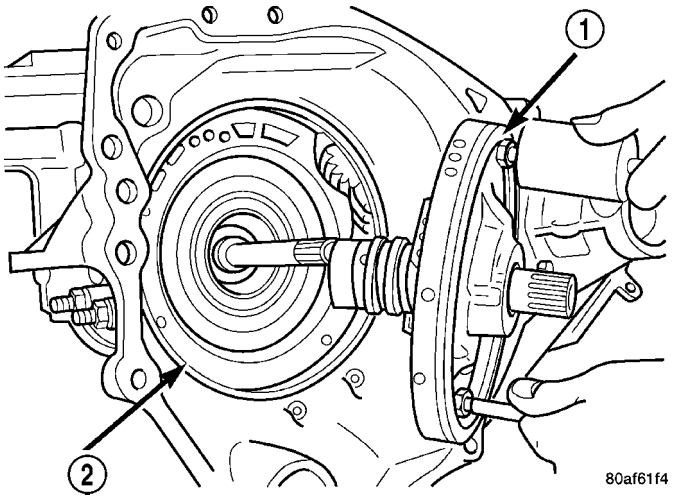

Fig. 27 Oil Pump Removed

1 - OIL PUMP
2 - GASKET

(19) Remove oil pump gasket (Fig. 28).

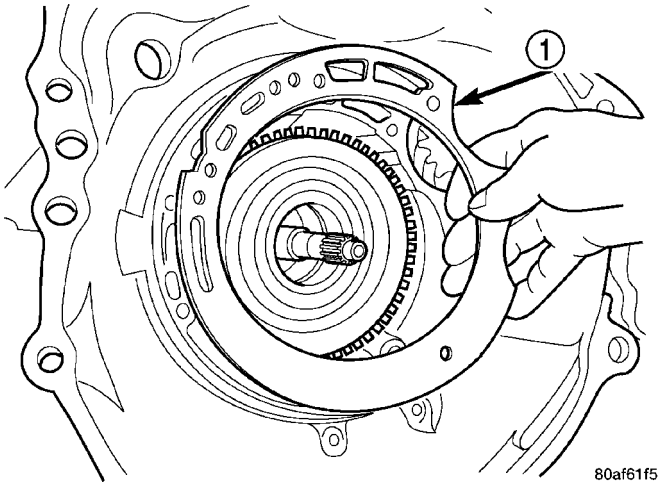

Fig. 28 Remove Oil Pump Gasket

1 - PUMP GASKET

CAUTION: If transaxle failure has occurred, the cooler bypass valve must be replaced. Do not re-use or attempt to clean valve.

(20) Remove cooler bypass valve (Fig. 29).

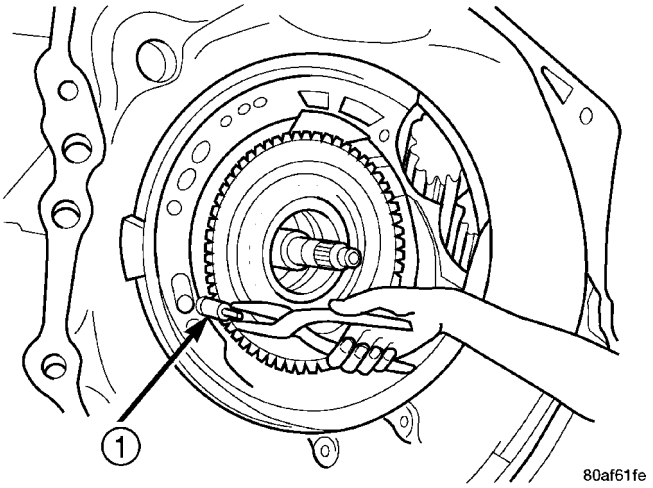

Fig. 29 Remove Bypass Valve

1 - COOLER BYPASS VALVE

(21) Remove #1 needle bearing (Fig. 30).

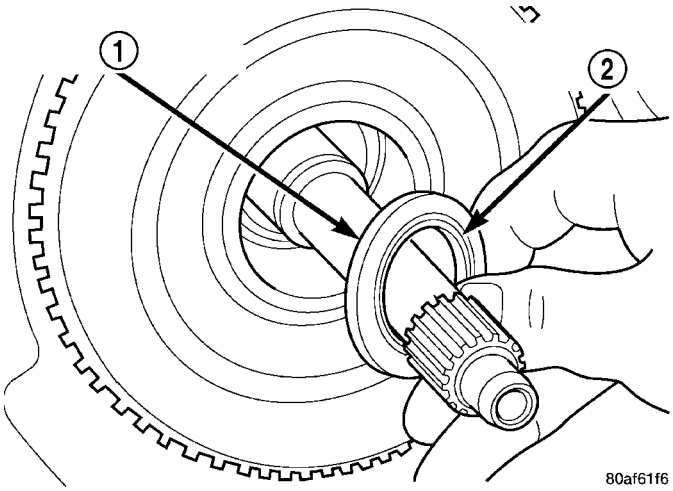

Fig. 30 Remove Caged Needle Bearing

1 - #1 CAGED NEEDLE BEARING
2 - NOTE: TANGED SIDE OUT

41TE AUTOMATIC TRANSAXLE (Continued)

(22) Remove input clutch assembly (Fig. 31).

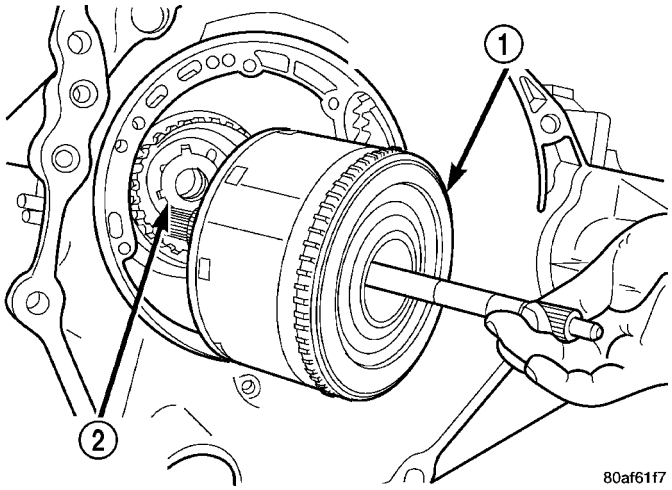

Fig. 31 Remove Input Clutch Assembly

1 - INPUT CLUTCH ASSEMBLY
2 - #4 THRUST WASHER

(23) Remove #4 thrust plate (Fig. 32).

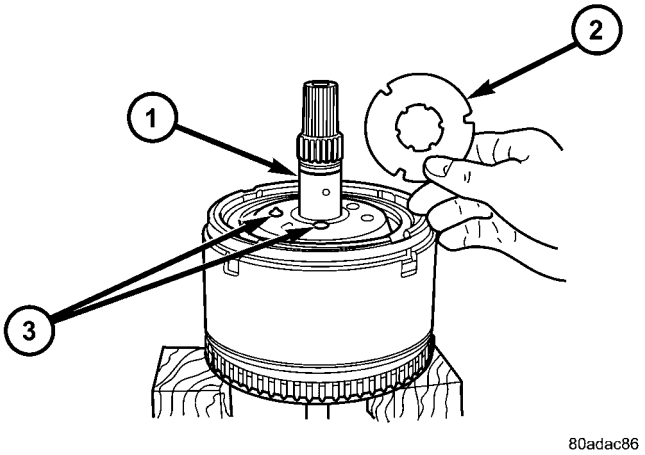

Fig. 32 No. 4 Thrust Plate

1 - OVERDRIVE SHAFT ASSEMBLY
2 - #4 THRUST PLATE (SELECT)
3 - 3 DABS OF PETROLATUM FOR RETENTION

(24) Remove front sun gear assembly and #4 thrust washer (Fig. 33).

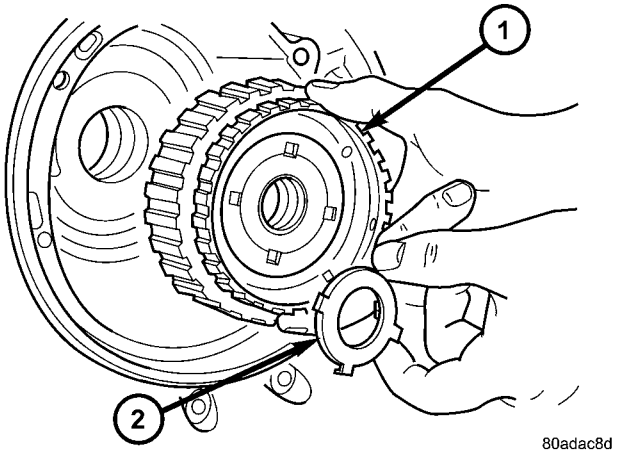

Fig. 33 Remove Front Sun Gear Assembly

1 - FRONT SUN GEAR ASSEMBLY
2 - #4 THRUST WASHER (FOUR TABS)

(25) Remove front carrier/rear annulus assembly and #6 needle bearing (Fig. 34).

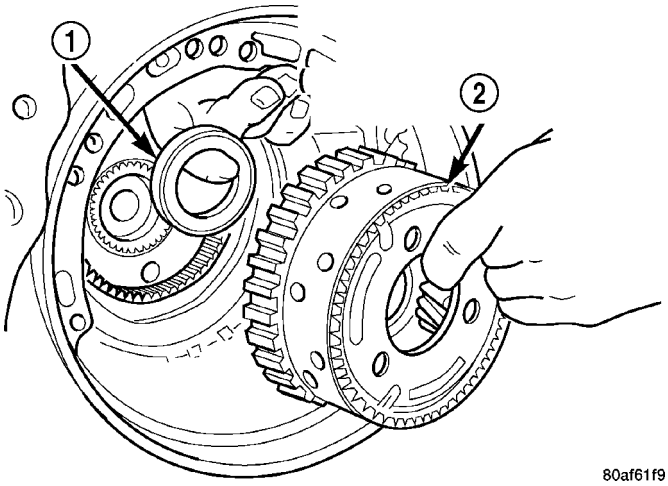

Fig. 34 Remove Front Carrier and Rear Annulus Assembly

1 - #6 NEEDLE BEARING
2 - FRONT CARRIER AND REAR ANNULUS ASSEMBLY (TWIST AND PULL OR PUSH TO REMOVE OR INSTALL).

41TE AUTOMATIC TRANSAXLE (Continued)

(26) Remove rear sun gear and #7 needle bearing (Fig. 35).

NOTE: The number 7 needle bearing has three anti-reversal tabs and is common with the number five and number two position. The orientation should allow the bearing to seat flat against the rear sun gear (Fig. 36). A small amount of petrolatum can be used to hold the bearing to the rear sun gear.

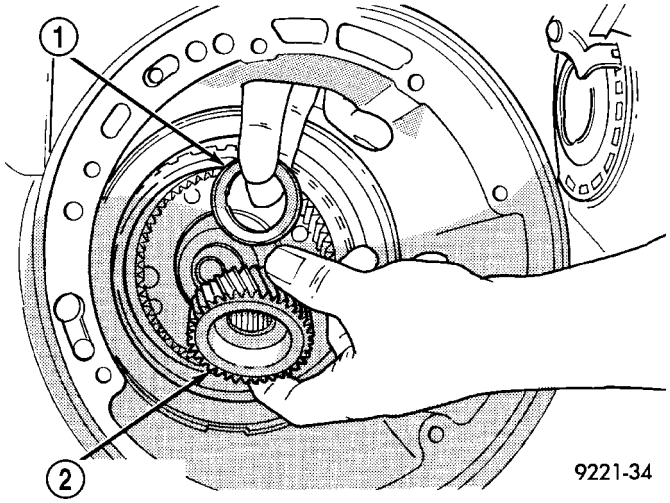

Fig. 35 Remove Rear Sun Gear

1 - #7 NEEDLE BEARING
2 - REAR SUN GEAR

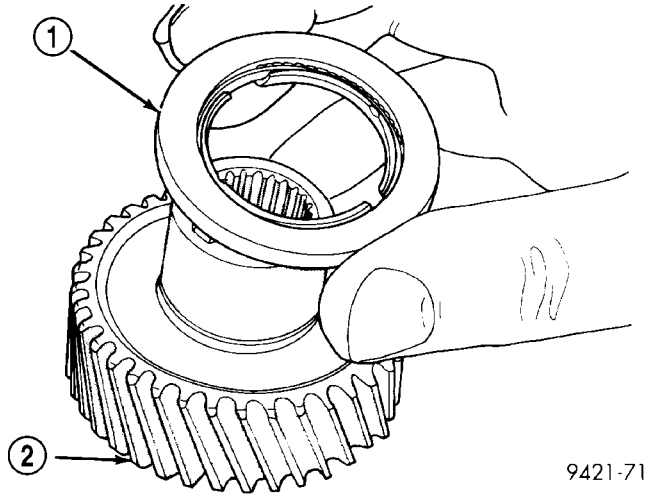

Fig. 36 Number 7 Bearing

1 - #7 NEEDLE BEARING
2 - REAR SUN GEAR

(27) Setup tool 5058 as shown in (Fig. 37). Compress 2/4 clutch return spring (just enough to remove snap ring) and remove snap ring.

NOTE: Verify that Tool 5058 is centered properly over the 2/4 clutch retainer before compressing. If necessary, fasten the 5058 bar to the bellhousing flange with any combination of locking pliers and bolts to center the tool properly.

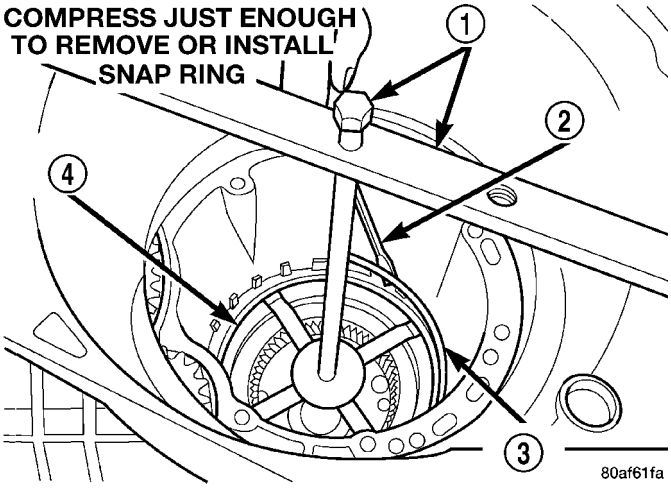

Fig. 37 Remove 2/4 Clutch Retainer Snap Ring

1 - TOOL 5058
2 - SCREWDRIVER
3 - SNAP RING
4 - 2/4 CLUTCH RETAINER

(28) Remove 2/4 clutch retainer (Fig. 38).

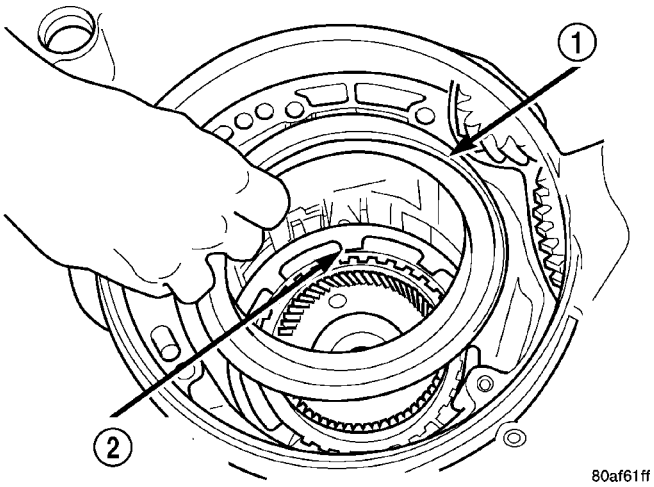

Fig. 38 2/4 Clutch Retainer

1 - 2/4 CLUTCH RETAINER
2 - 2/4 CLUTCH RETURN SPRING

41TE AUTOMATIC TRANSAXLE (Continued)

(29) Remove 2/4 clutch return spring (Fig. 39).

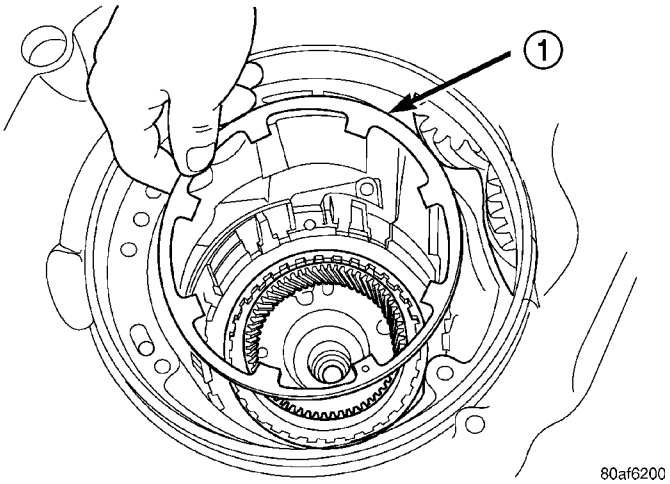

Fig. 39 Remove 2/4 Clutch Return Spring

1 - 2/4 CLUTCH RETURN SPRING

(30) Remove 2/4 clutch pack (Fig. 40). **Tag 2/4 clutch pack for reassembly identification.**

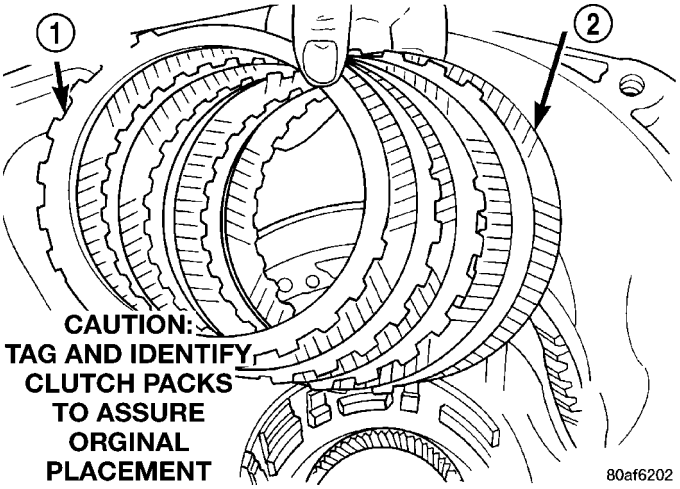

Fig. 40 Remove 2/4 Clutch Pack

1 - CLUTCH PLATE (4)
2 - CLUTCH DISC (4)

(31) Remove tapered snap ring (Fig. 41).

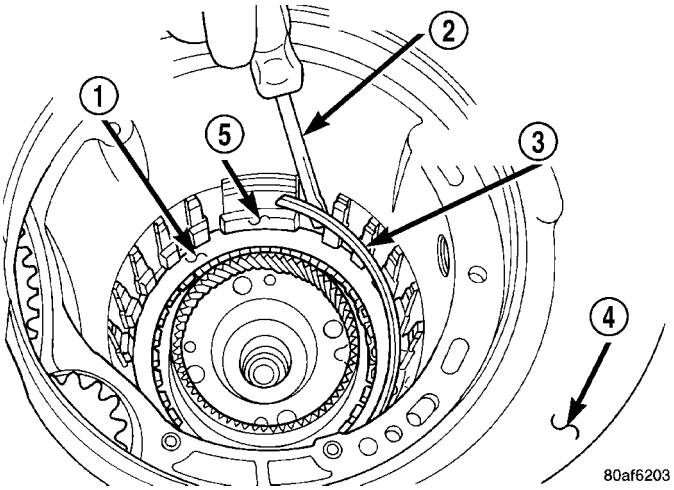

Fig. 41 Remove Tapered Snap Ring

1 - LOW/REVERSE CLUTCH REACTION PLATE
2 - SCREWDRIVER
3 - LOW/REVERSE TAPERED SNAP RING (TAPERED SIDE UP)
4 - OIL PAN FACE
5 - LONG TAB

(32) Remove low/reverse reaction plate (Fig. 42).

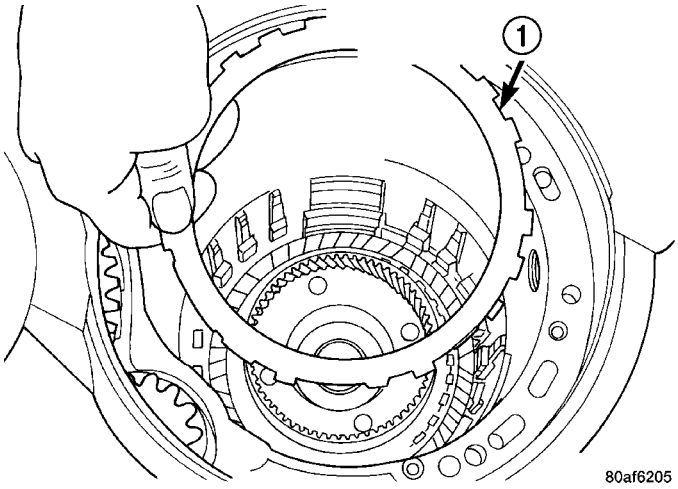

Fig. 42 Remove Low/Reverse Reaction Plate

1 - LOW/REVERSE REACTION PLATE (FLAT SIDE UP)

41TE AUTOMATIC TRANSAXLE (Continued)

(33) Remove one low/reverse clutch disc (Fig. 43).

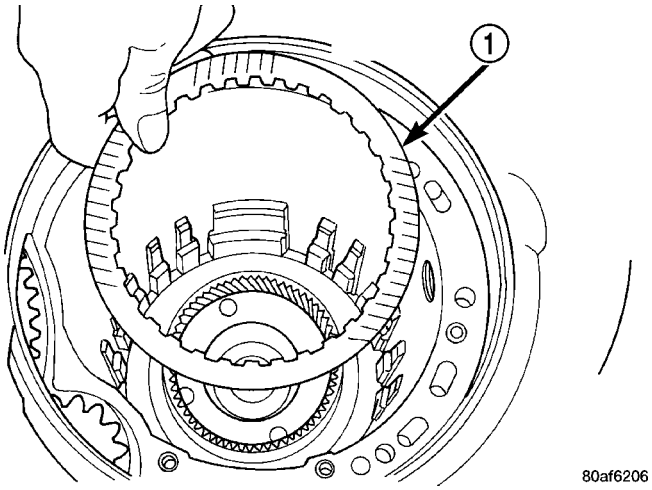

Fig. 43 Remove One Disc

1 - ONE DISC FROM LOW/REVERSE CLUTCH

(34) Remove low/reverse reaction plate snap ring (Fig. 44).

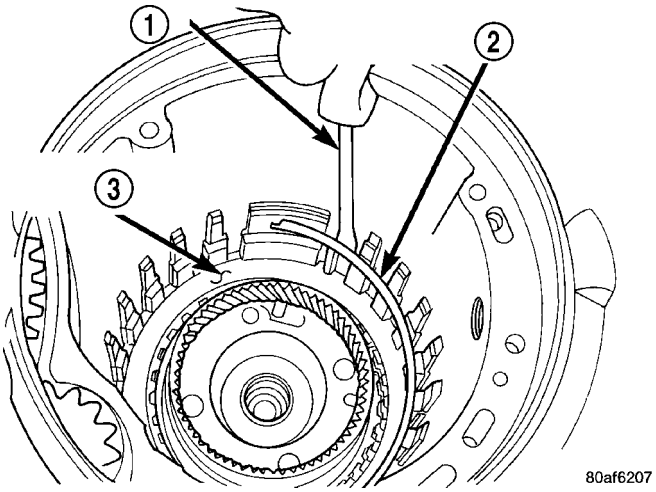

Fig. 44 Remove Low/Reverse Reaction Plate Snap Ring

1 - SCREWDRIVER
2 - LOW/REVERSE REACTION PLATE FLAT SNAP RING
3 - DO NOT SCRATCH CLUTCH PLATE

(35) Remove low/reverse clutch pack (Fig. 45).

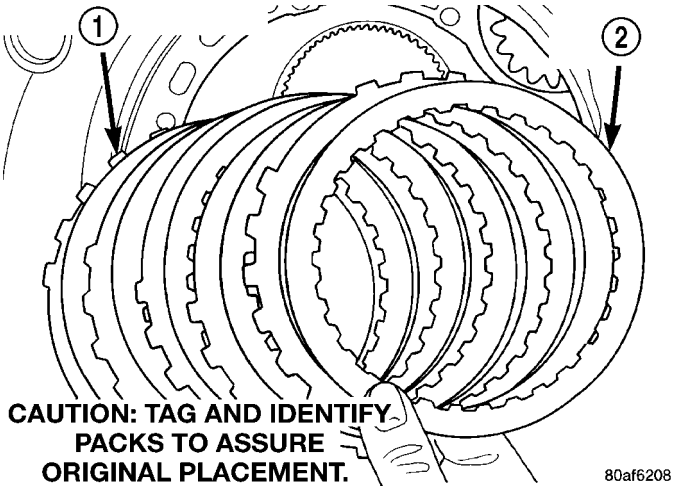

Fig. 45 Remove Low/Reverse Clutch Pack

1 - CLUTCH PLATES (5)
2 - CLUTCH DISCS (5)

(36) Remove transfer gear cover-to-case bolts (Fig. 46).

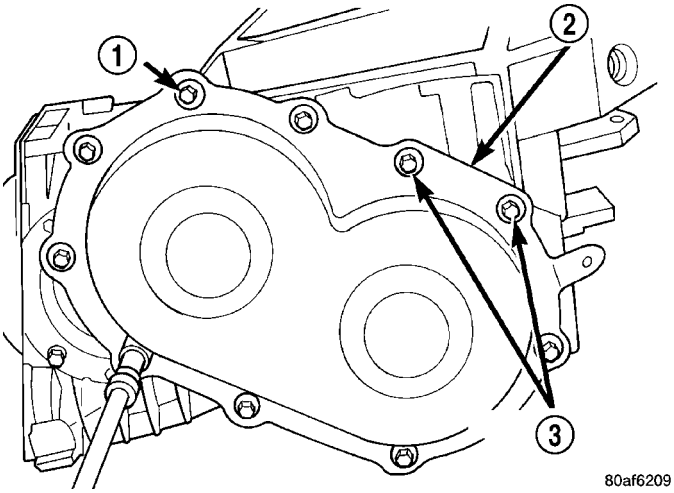

Fig. 46 Remove Rear Cover Bolts

1 - REAR COVER BOLTS
2 - REAR COVER
3 - USE SEALANT ON BOLTS

41TE AUTOMATIC TRANSAXLE (Continued)

(37) Remove transfer gear cover (Fig. 47).

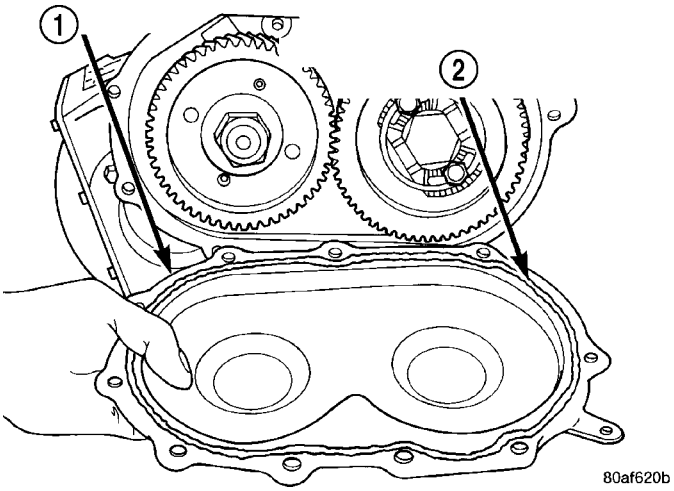

Fig. 47 Remove Rear Cover

1 - REAR COVER
2 - 1/8 INCH BEAD OF MOPAR® ATF RTV (MS-GF41) AS SHOWN

(38) Using Tool 6259, remove transfer shaft gear-to-shaft nut and coned washer (Fig. 48) (Fig. 49).

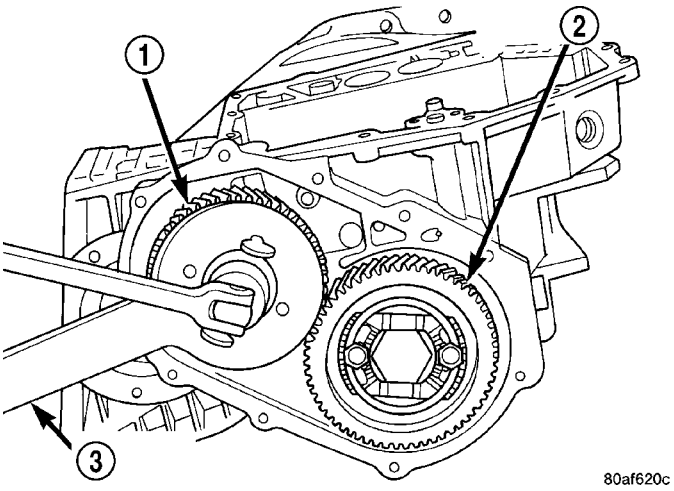

Fig. 48 Remove Transfer Shaft Gear Nut

1 - TRANSFER SHAFT GEAR
2 - OUTPUT GEAR
3 - SPECIAL TOOL 6259

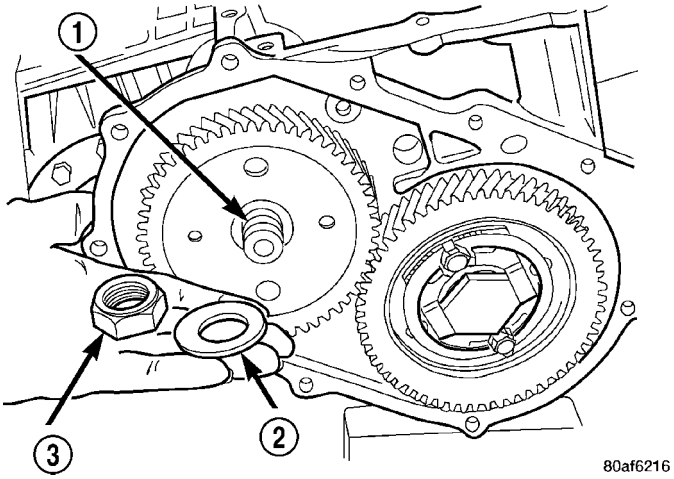

Fig. 49 Transfer Shaft Gear Nut and Coned Washer

1 - TRANSFER SHAFT
2 - LOCK WASHER
3 - NUT

(39) Using tool L-4407A, remove transfer shaft gear (Fig. 50).

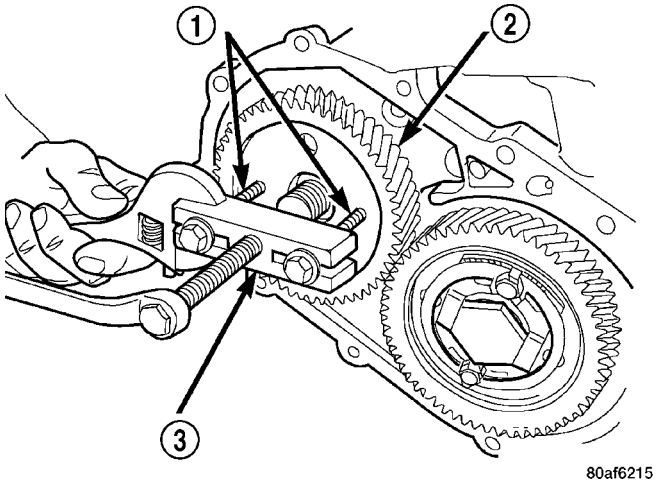

Fig. 50 Remove Transfer Shaft Gear

1 - SPECIAL TOOL L4407-6
2 - TRANSFER SHAFT GEAR
3 - SPECIAL TOOL L4407A

41TE AUTOMATIC TRANSAXLE (Continued)

(40) Remove transfer gear shim (select) (Fig. 51).

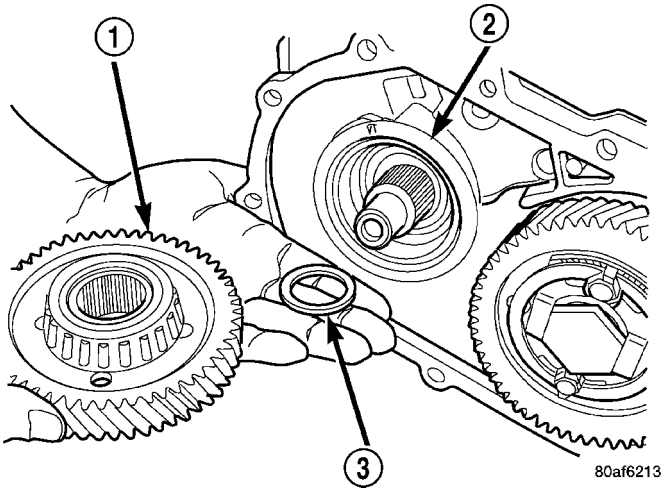

Fig. 51 Remove Transfer Shaft Gear and (Select) Shim

1 - TRANSFER SHAFT GEAR
2 - BEARING CUP RETAINER
3 - SHIM (SELECT)

(41) Remove bearing cup retainer (Fig. 52).

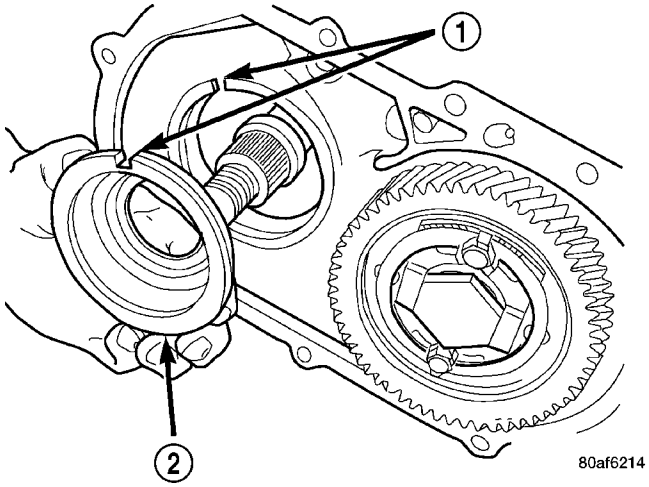

Fig. 52 Remove Bearing Cup Retainer

1 - ALIGN INDEXING TAB TO SLOT
2 - BEARING CUP RETAINER

(42) Remove transfer gear bearing cone using setup shown in (Fig. 53).

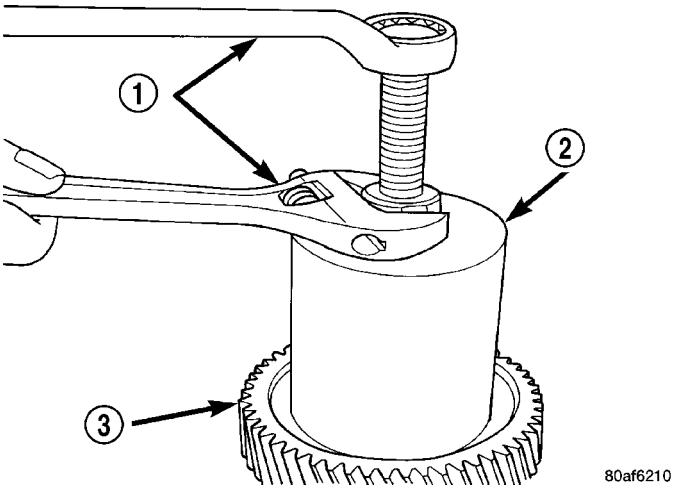

Fig. 53 Remove Transfer Gear Bearing Cone

1 - WRENCHES
2 - TOOL 5048 WITH JAWS TOOL 5048–4 AND BUTTON TOOL L-4539–2
3 - TRANSFER SHAFT GEAR

(43) Remove transfer shaft bearing cup from retainer using Tool 6062 (Fig. 54).

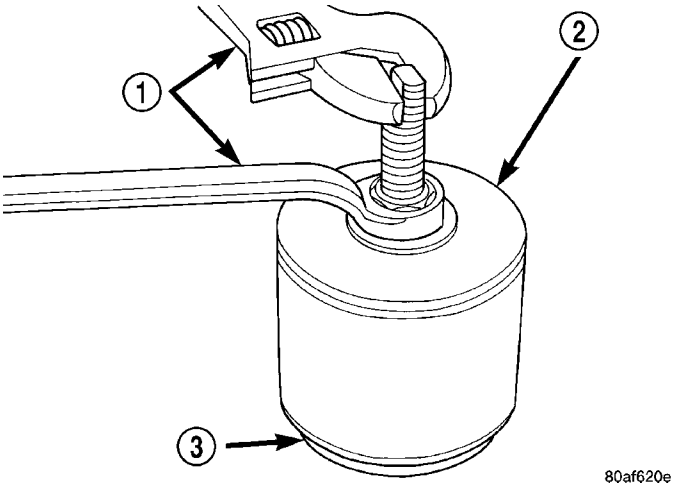

Fig. 54 Remove Transfer Shaft Bearing Cup

1 - WRENCHES
2 - TOOL 6062
3 - TRANSFER SHAFT BEARING CUP RETAINER

41TE AUTOMATIC TRANSAXLE (Continued)

(44) Using Tool 6051, remove transfer shaft bearing snap ring (Fig. 55).

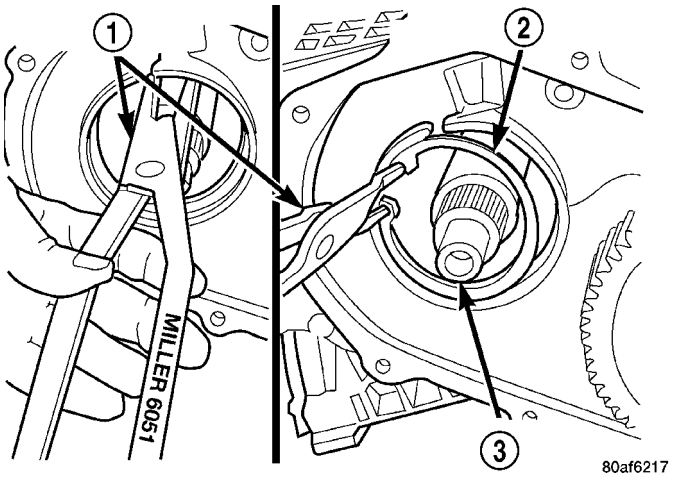

Fig. 55 Remove Transfer Shaft Bearing Snap Ring

1 - SNAP RING PLIERS TOOL 6051
2 - TRANSFER SHAFT BEARING SNAP RING
3 - TRANSFER SHAFT

(45) Using tool 5049A, remove transfer shaft from transaxle (Fig. 56).

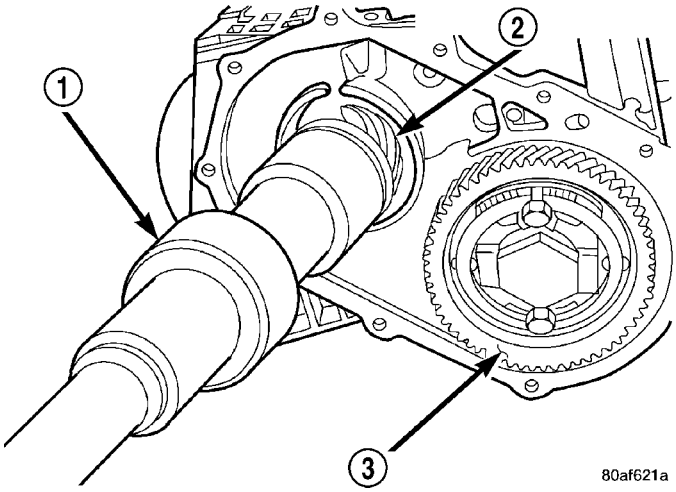

Fig. 56 Remove Transfer Shaft

1 - SPECIAL TOOL 5049–A
2 - TRANSFER SHAFT
3 - OUTPUT GEAR

(46) Slip bearing cup retainer and oil baffle off of shaft (Fig. 57).

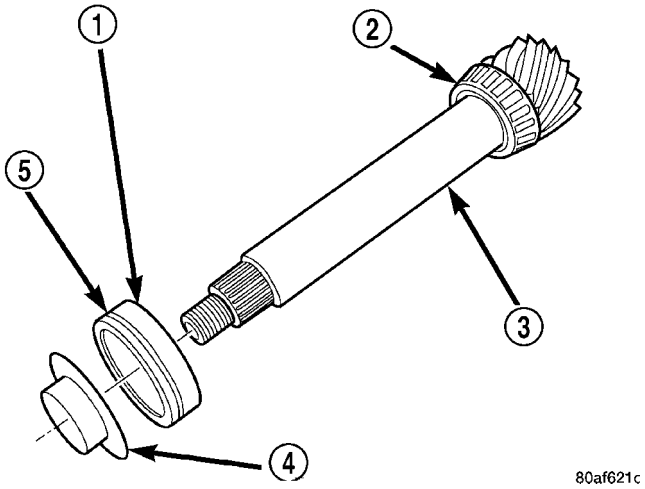

Fig. 57 Bearing Cup Removed

1 - BEARING CUP
2 - BEARING CONE
3 - TRANSFER SHAFT
4 - OIL BAFFLE
5 - O-RING

(47) Using tool P-334, press transfer shaft bearing cone off of shaft (Fig. 58).

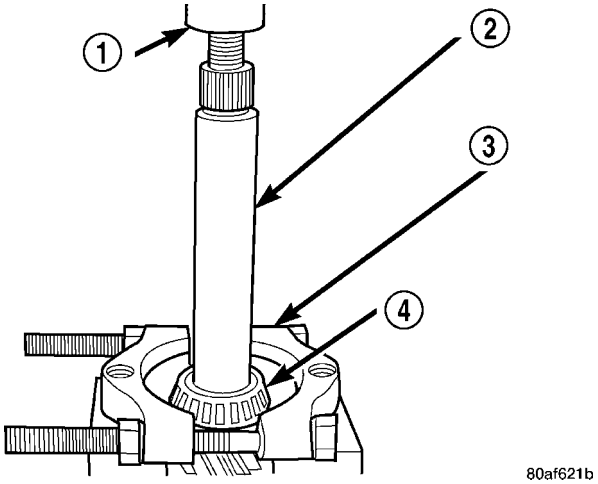

Fig. 58 Remove Transfer Shaft Bearing Cone

1 - ARBOR PRESS RAM
2 - TRANSFER SHAFT
3 - TOOL P-334
4 - BEARING CONE

41TE AUTOMATIC TRANSAXLE (Continued)

(48) Bend output gear retaining strap ears flat to allow bolt removal.

(49) Remove output shaft stirrup strap bolts (Fig. 59).

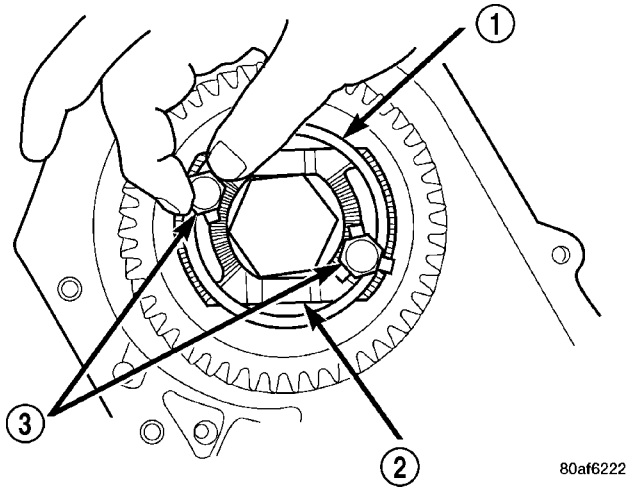

Fig. 59 Remove Strap Bolts

1 - RETAINING STRAP
2 - STIRRUP
3 - RETAINING STRAP BOLTS

(50) Remove stirrup and strap (Fig. 60).

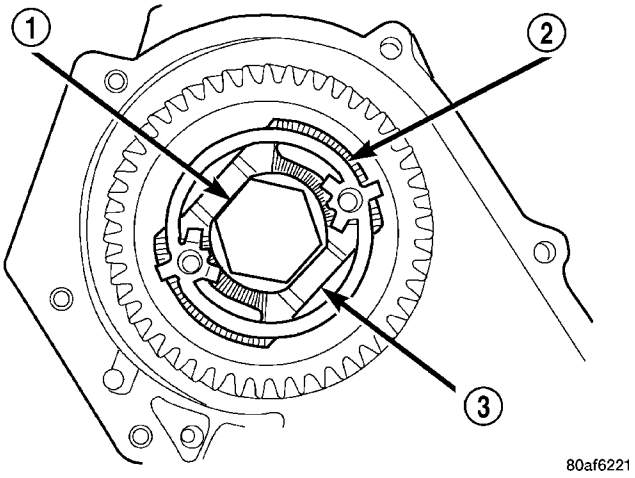

Fig. 60 Remove Stirrup Strap

1 - OUTPUT GEARBOLT
2 - RETAINING STRAP
3 - STIRRUP

(51) Using Tool 6259 (Fig. 61), remove output shaft gear-to-shaft bolt and washer (Fig. 62).

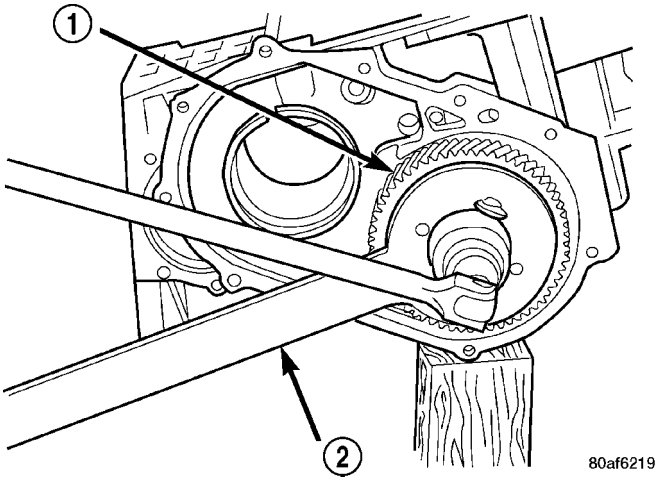

Fig. 61 Remove Output Gear Bolt

1 - OUTPUT GEAR
2 - TOOL 6259

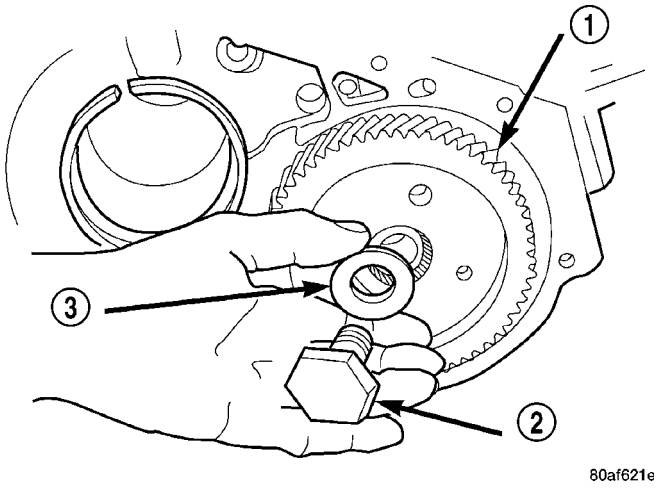

Fig. 62 Output Gear Bolt and Washer

1 - OUTPUT GEAR
2 - BOLT
3 - CONED LOCK WASHER

41TE AUTOMATIC TRANSAXLE (Continued)

(52) Using Tool L4407A, and button 6055, remove output gear from shaft (Fig. 63).

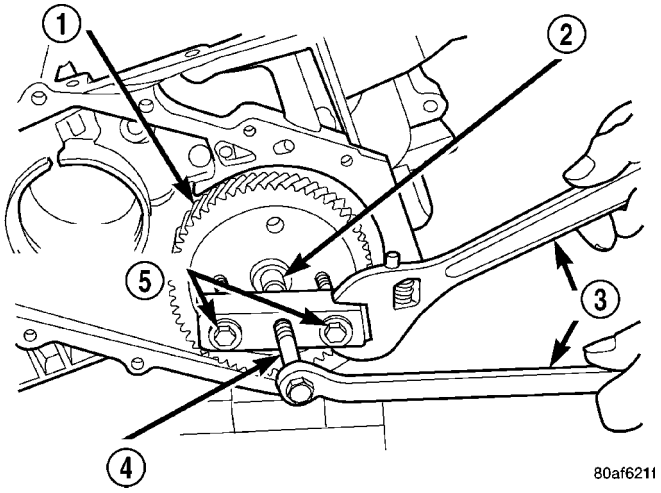

Fig. 63 Remove Output Gear

1 - OUTPUT GEAR
2 - BUTTON TOOL 6055
3 - WRENCHES
4 - TOOL L4407A
5 - BOLTS TOOL L4407–6

(53) Remove output gear bearing shim (select) (Fig. 64).

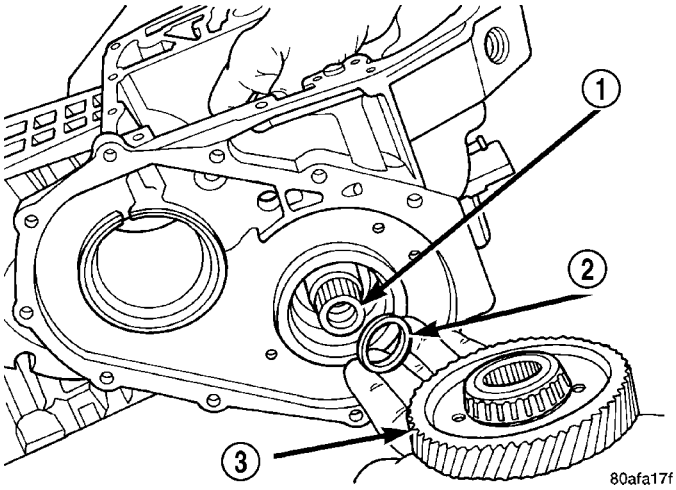

Fig. 64 Output Gear and (Select) Shim

1 - REAR CARRIER ASSEMBLY
2 - SHIM (SELECT)
3 - OUTPUT GEAR

(54) Using setup as shown in (Fig. 65), remove output gear bearing cone.

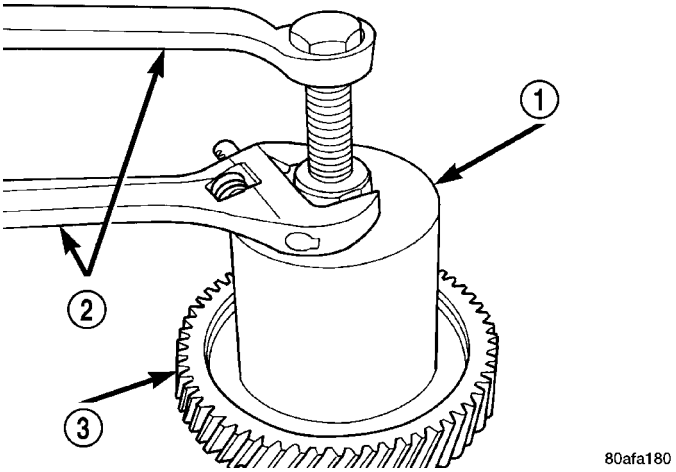

Fig. 65 Remove Bearing Cone

1 - TOOL 5048 WITH JAWS 5048–5 AND BUTTON L-4539–2
2 - WRENCHES
3 - OUTPUT GEAR

(55) Remove rear carrier assembly from transaxle (Fig. 66).

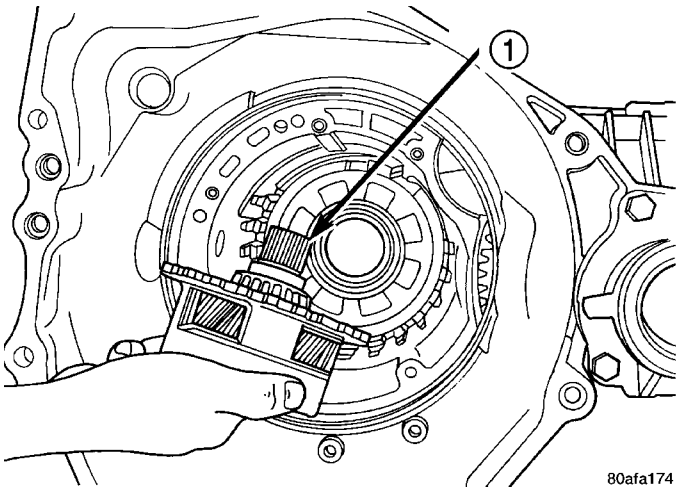

Fig. 66 Remove Rear Carrier Assembly

1 - REAR CARRIER ASSEMBLY

41TE AUTOMATIC TRANSAXLE (Continued)

(56) Remove rear carrier assembly bearing cone using setup shown in (Fig. 67).

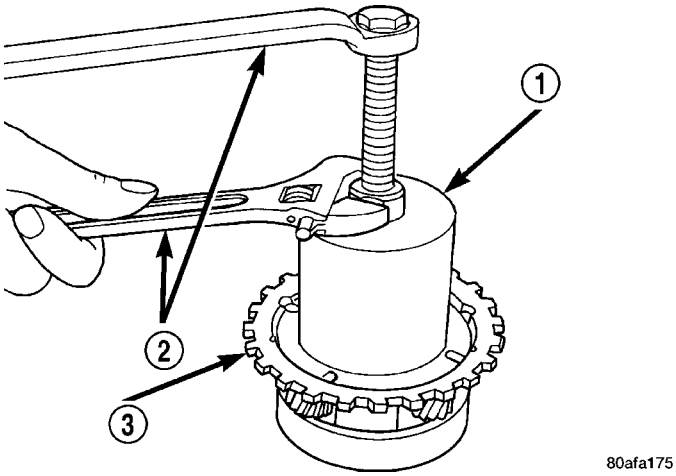

Fig. 67 Remove Rear Carrier Bearing Cone

1 - TOOL 5048 WITH JAWS 5048–3 AND BUTTON 6055
2 - WRENCHES
3 - REAR CARRIER ASSEMBLY

(57) Install low/reverse spring compressor tool as shown in (Fig. 68) (Fig. 69).

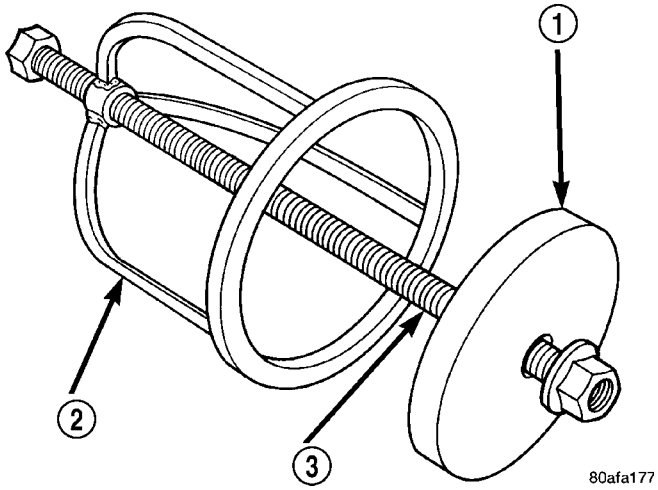

Fig. 68 Low/Reverse Spring Compressor Tool

1 - TOOL 6057
2 - TOOL 5059
3 - TOOL 5058–3

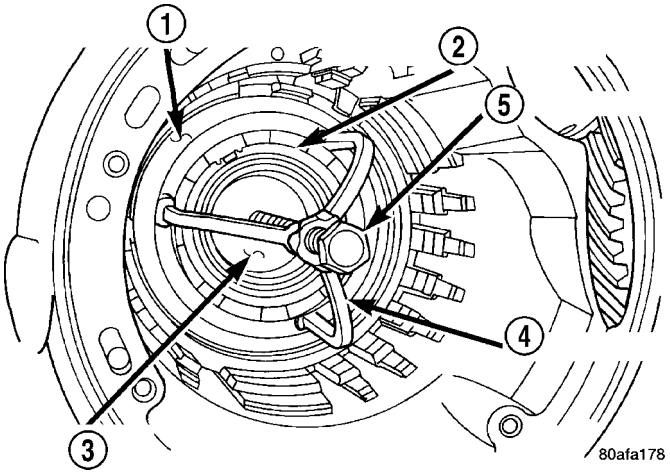

Fig. 69 Compressor Tool in Use

1 - LOW/REVERSE CLUTCH RETURN SPRING
2 - SNAP RING (INSTALL AS SHOWN)
3 - TOOL 6057
4 - TOOL 5059
5 - TOOL 5058–3

(58) Compress low/reverse piston return spring and remove snap ring (Fig. 70).

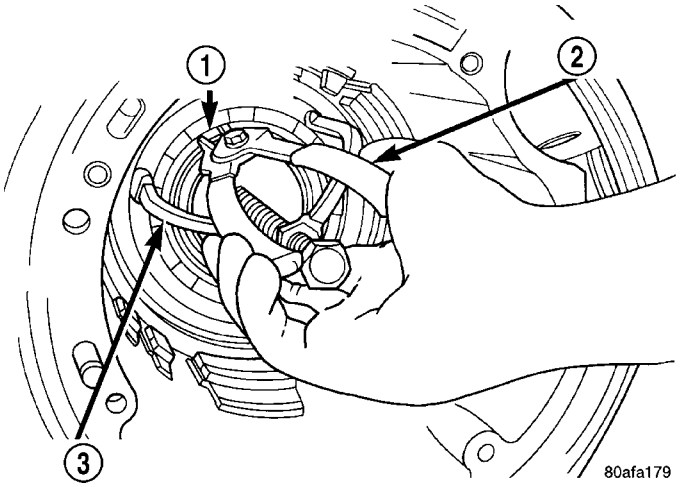

Fig. 70 Remove Snap Ring

1 - SNAP RING OPENING MUST BE BETWEEN SPRING LEVERS (AS SHOWN)
2 - SNAP RING PLIERS
3 - TOOL 6057

41TE AUTOMATIC TRANSAXLE (Continued)

(59) Remove low/reverse spring compressor tool and low reverse piston return spring (Fig. 71).

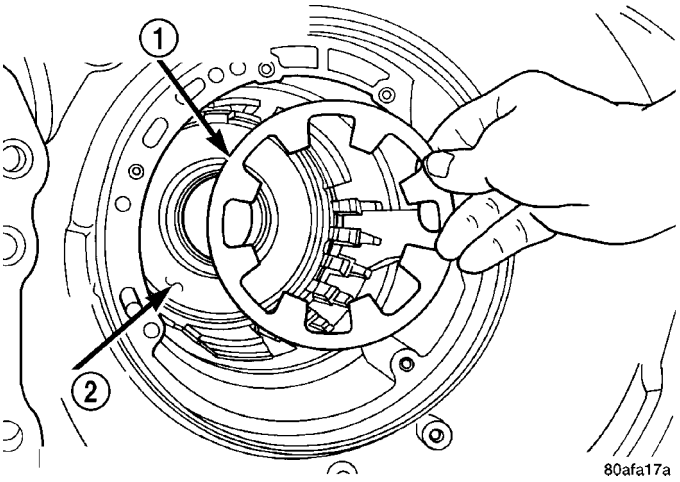

Fig. 71 Low/Reverse Piston Return Spring

1 - LOW/REVERSE PISTON RETURN SPRING
2 - PISTON

(60) Using a suitable punch , drive out park guide bracket pivot shaft plug (Fig. 72).

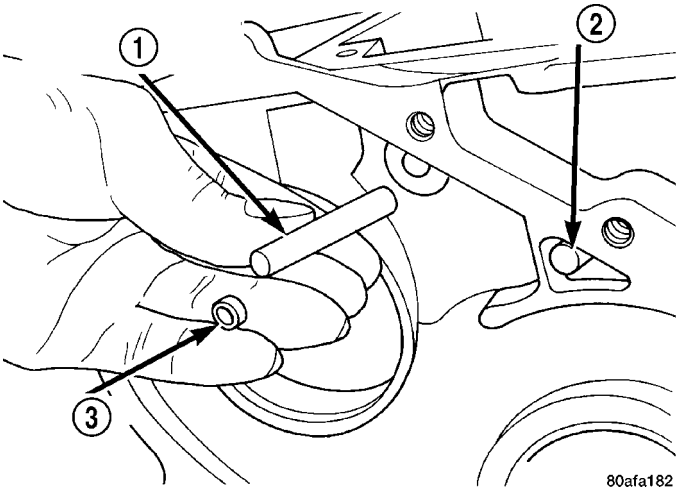

Fig. 72 Remove Anchor Shaft and Plug

1 - GUIDE BRACKET ANCHOR SHAFT
2 - PIVOT SHAFT
3 - ANCHOR SHAFT PLUG

(61) Using ordinary pliers, remove pivot shaft and guide bracket assembly (Fig. 73).

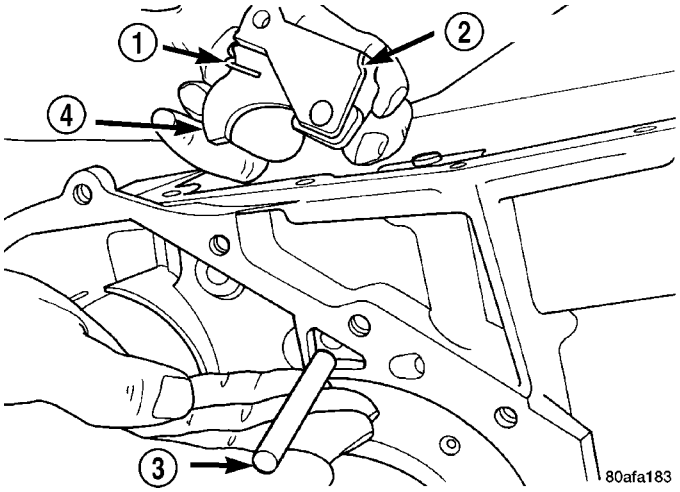

Fig. 73 Pivot Shaft and Guide Bracket

1 - ANTIRACHET SPRING
2 - GUIDE BRACKET
3 - PIVOT SHAFT
4 - PAWL

(62) Inspect guide bracket components for excessive wear and replace if necessary (Fig. 74).

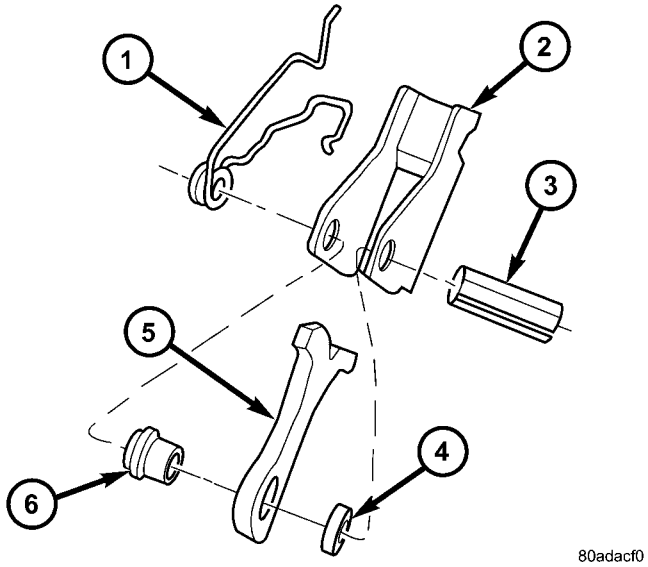

Fig. 74 Guide Bracket Disassembled

1 - ANTIRATCHET SPRING
2 - GUIDE BRACKET
3 - SPLIT SLEEVE
4 - SPACER
5 - PAWL
6 - STEPPED SPACER

41TE AUTOMATIC TRANSAXLE (Continued)

(63) Remove low/reverse clutch piston (Fig. 75).

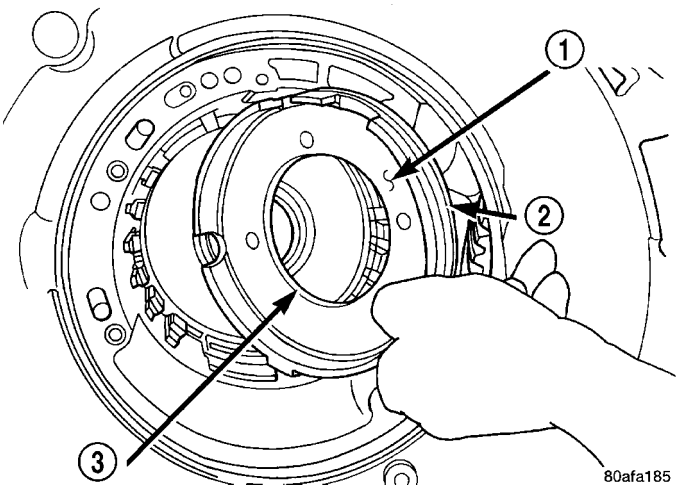

Fig. 75 Remove Low/Reverse Clutch Piston

1 - LOW/REVERSE CLUTCH PISTON
2 - D-RING SEAL
3 - D-RING SEAL

(64) Remove low/reverse piston retainer-to-case screws (Fig. 76).

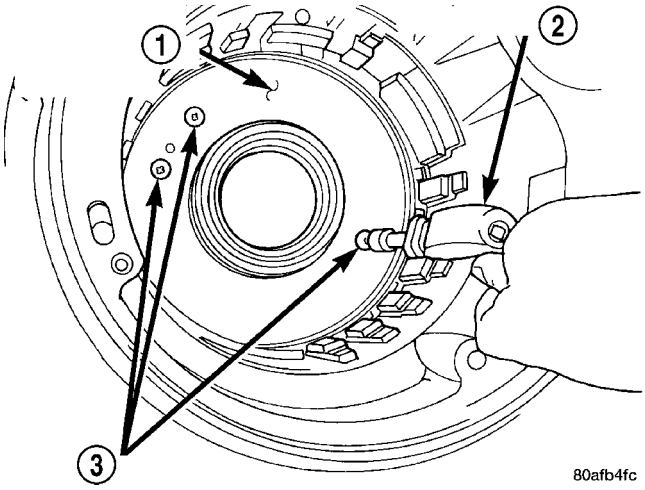

Fig. 76 Remove Piston Retainer Attaching Screws

1 - LOW/REVERSE CLUTCH PISTON RETAINER
2 - SCREWDRIVER
3 - TORX-LOC SCREWS

(65) Remove low/reverse piston retainer (Fig. 77).

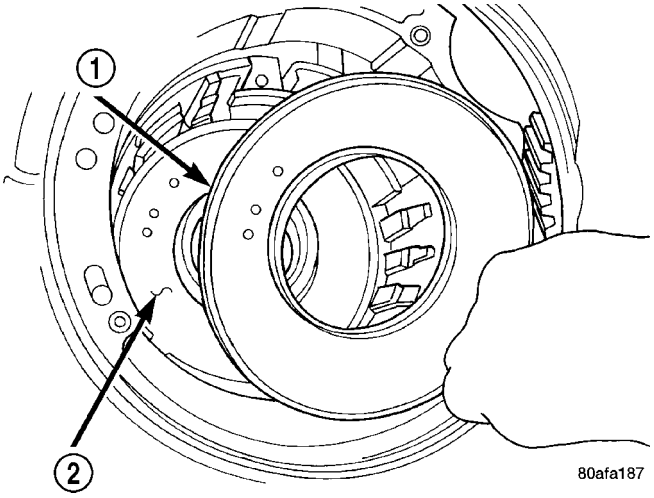

Fig. 77 Remove Piston Retainer

1 - LOW/REVERSE CLUTCH PISTON RETAINER
2 - GASKET

(66) Remove low/reverse piston retainer-to-case gasket (Fig. 78).

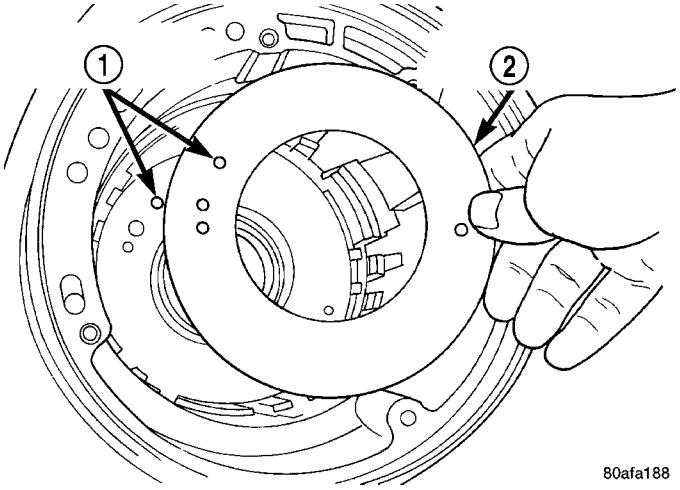

Fig. 78 Remove Piston Retainer Gasket

1 - GASKET HOLES MUST LINE UP
2 - LOW/REVERSE CLUTCH PISTON RETAINER GASKET

41TE AUTOMATIC TRANSAXLE (Continued)

(67) Using a hammer and suitable drift, drive out inner output bearing cup (Fig. 79).

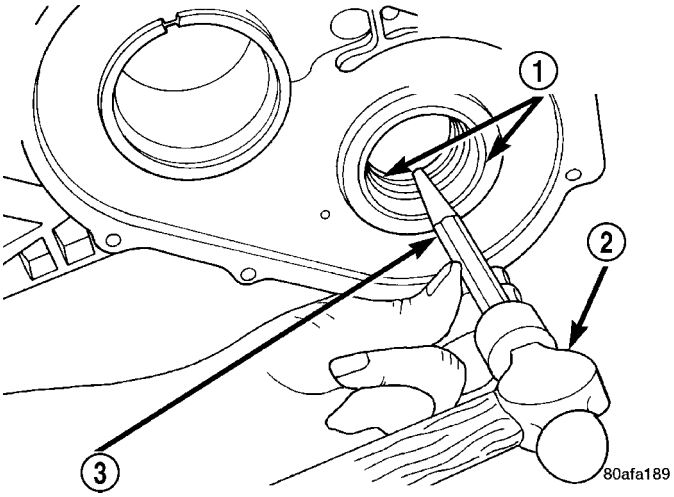

Fig. 79 Remove Output Bearing Inner Cup

1 - OUTPUT BEARING CUPS (REPLACE IN PAIRS)
2 - HAMMER
3 - BRASS DRIFT

(68) Using tool 6062, remove outer output bearing cup (Fig. 80).

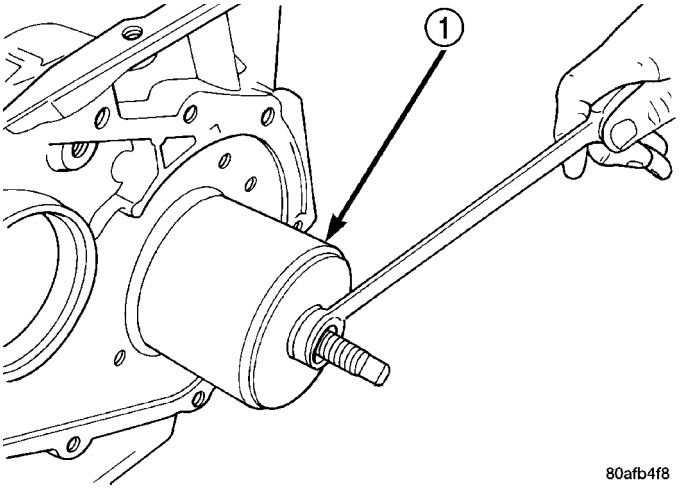

Fig. 80 Remove Output Bearing Outer Cup

1 - TOOL 6062

ASSEMBLY

CAUTION: The cooler bypass valve must be replaced if transaxle failure has occurred. Do not attempt to reuse or clean old valve.

NOTE: If transaxle is being overhauled (clutch and/or seal replacement), the TCM/PCM Quick Learn procedure must be performed. (Refer to 8 - ELECTRICAL/ELECTRONIC CONTROL MODULES/TRANSMISSION CONTROL MODULE - STANDARD PROCEDURE)

(1) Install both output bearing cups using Tool 5050 (Fig. 81).

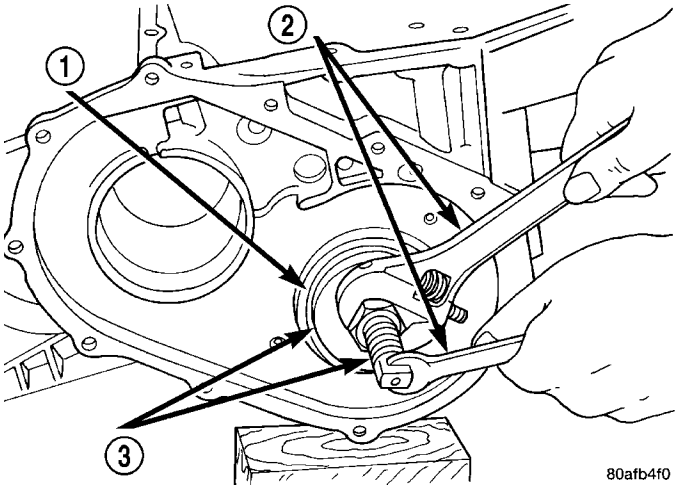

Fig. 81 Install Both Output Bearing Cups

1 - OUTPUT BEARING CUPS
2 - WRENCHES
3 - TOOL 5050

(2) Install low/reverse piston retainer gasket (Fig. 82). Make sure gasket holes line up with case.

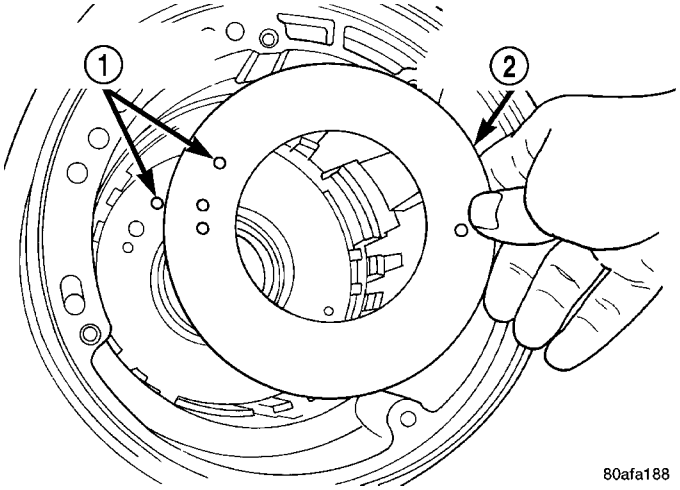

Fig. 82 Install Piston Retainer Gasket

1 - GASKET HOLES MUST LINE UP
2 - LOW/REVERSE CLUTCH PISTON RETAINER GASKET

41TE AUTOMATIC TRANSAXLE (Continued)

(3) Install low/reverse piston retainer (Fig. 83).

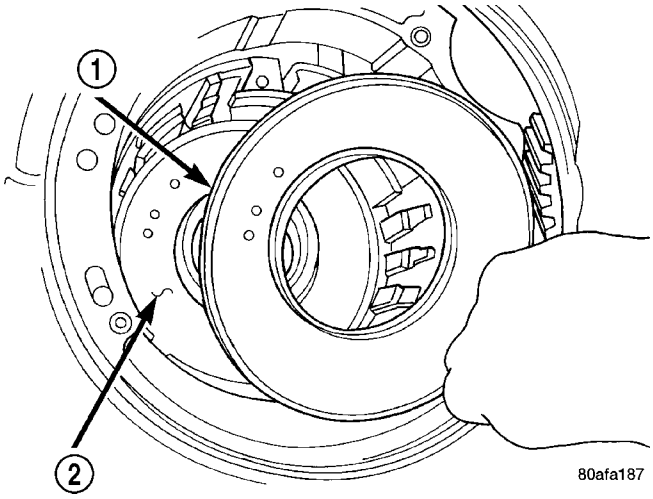

Fig. 83 Install Piston Retainer

1 - LOW/REVERSE CLUTCH PISTON RETAINER
2 - GASKET

(4) Install low/reverse piston retainer-to-case bolts (Fig. 84) and torque to 5 N·m (45 in. lbs.).

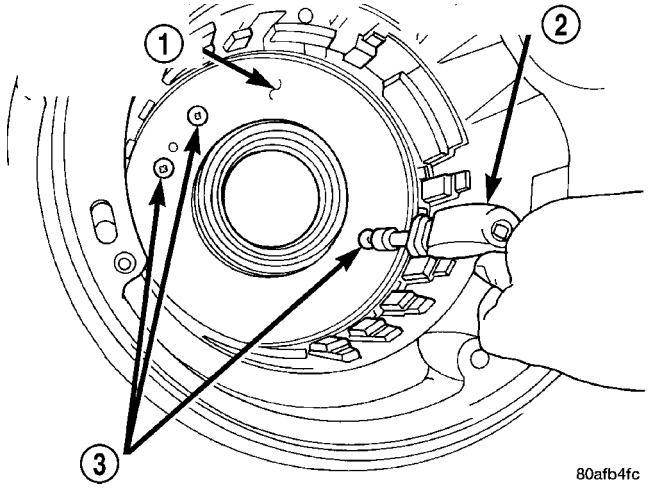

Fig. 84 Install Piston Retainer Attaching Screws

1 - LOW/REVERSE CLUTCH PISTON RETAINER
2 - SCREWDRIVER
3 - TORX-LOC SCREWS

(5) Install low/reverse clutch piston (Fig. 85).

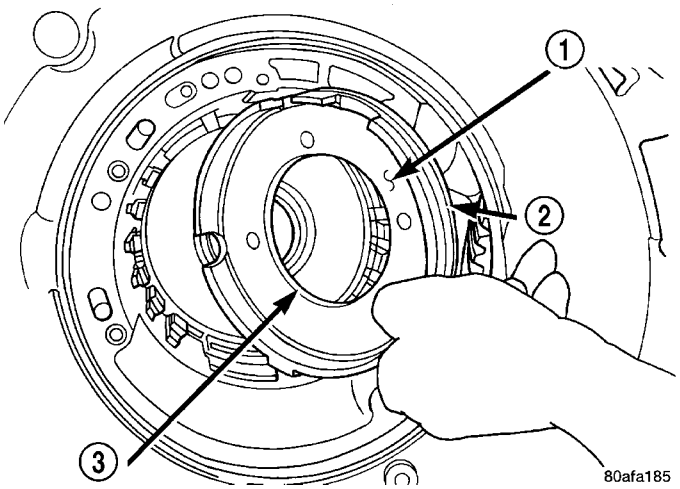

Fig. 85 Install Low/Reverse Clutch Piston

1 - LOW/REVERSE CLUTCH PISTON
2 - D-RING SEAL
3 - D-RING SEAL

(6) Assemble park guide bracket assembly (Fig. 87) (Fig. 86).

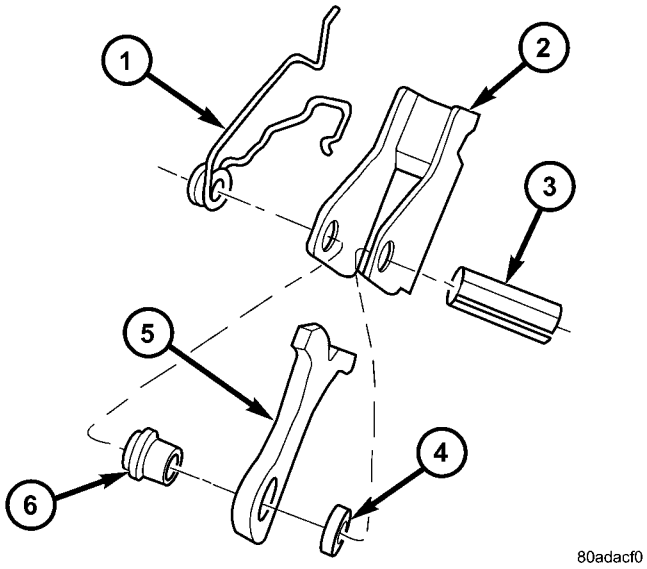

Fig. 86 Guide Bracket Disassembled

1 - ANTIRATCHET SPRING
2 - GUIDE BRACKET
3 - SPLIT SLEEVE
4 - SPACER
5 - PAWL
6 - STEPPED SPACER

41TE AUTOMATIC TRANSAXLE (Continued)

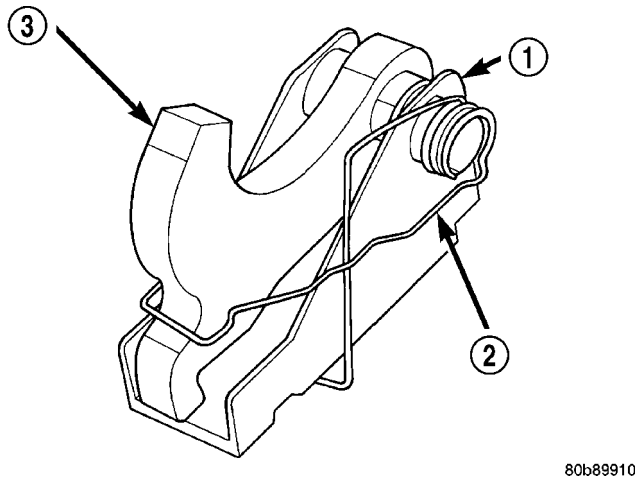

Fig. 87 Guide Bracket

1 - GUIDE BRACKET
2 - ANTIRATCHET SPRING (MUST BE ASSEMBLED AS SHOWN)
3 - PAWL

(7) Install guide bracket into position and insert pivot shaft (Fig. 88).

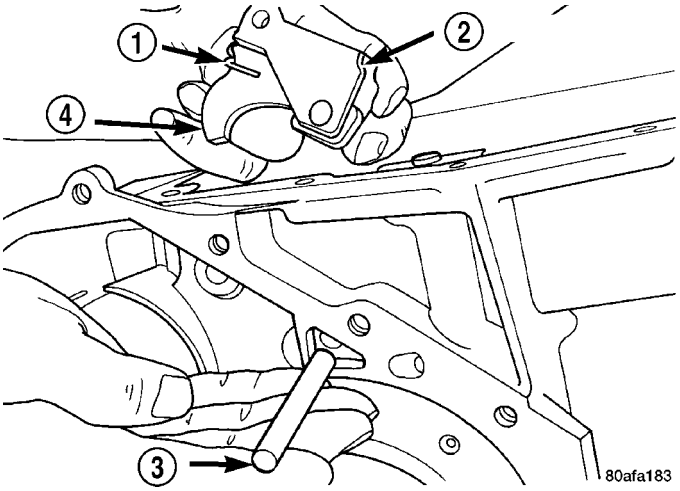

Fig. 88 Pivot Shaft and Guide Bracket

1 - ANTIRACHET SPRING
2 - GUIDE BRACKET
3 - PIVOT SHAFT
4 - PAWL

(8) Install anchor shaft and plug (Fig. 89). Make sure guide bracket and split sleeve are in contact with the rear of the transaxle case.

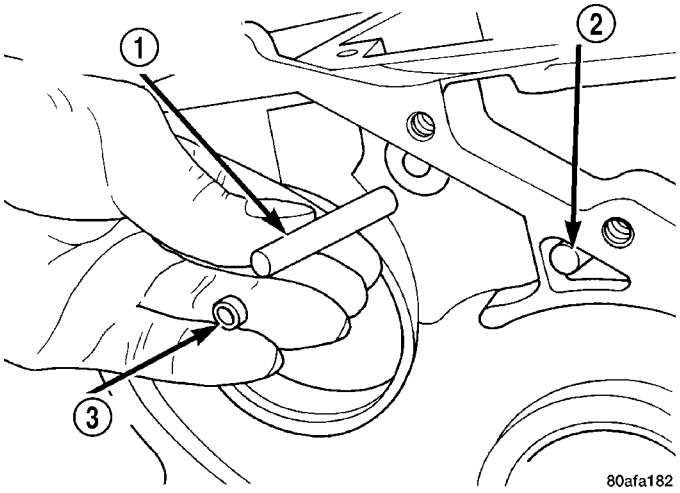

Fig. 89 Install Anchor Shaft and Plug

1 - GUIDE BRACKET ANCHOR SHAFT
2 - PIVOT SHAFT
3 - ANCHOR SHAFT PLUG

(9) Install low/reverse piston return spring (Fig. 90).

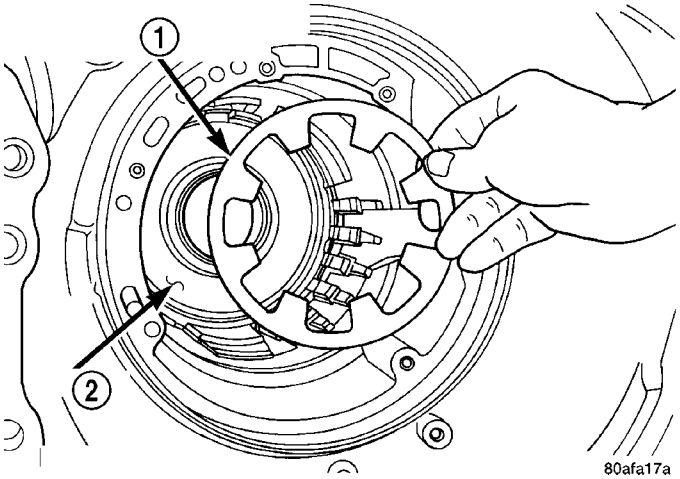

Fig. 90 Low/Reverse Piston Return Spring

1 - LOW/REVERSE PISTON RETURN SPRING
2 - PISTON

41TE AUTOMATIC TRANSAXLE (Continued)

(10) Install low/reverse spring compressor into position (Fig. 91). Compress low/reverse piston and install snap ring as shown in (Fig. 92).

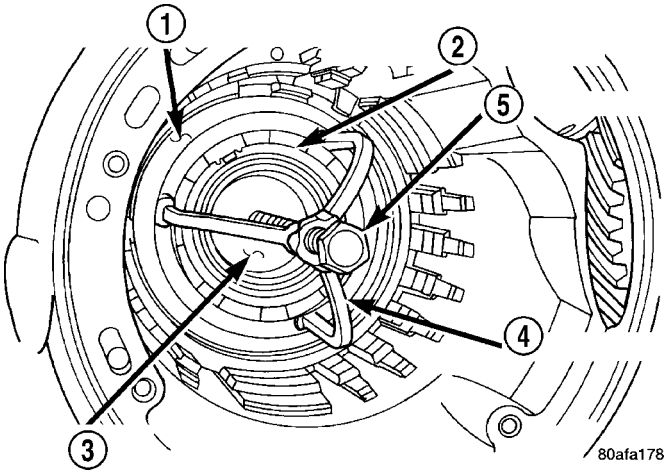

Fig. 91 Compressor Tool in Use

1 - LOW/REVERSE CLUTCH RETURN SPRING
2 - SNAP RING (INSTALL AS SHOWN)
3 - TOOL 6057
4 - TOOL 5059
5 - TOOL 5058–3

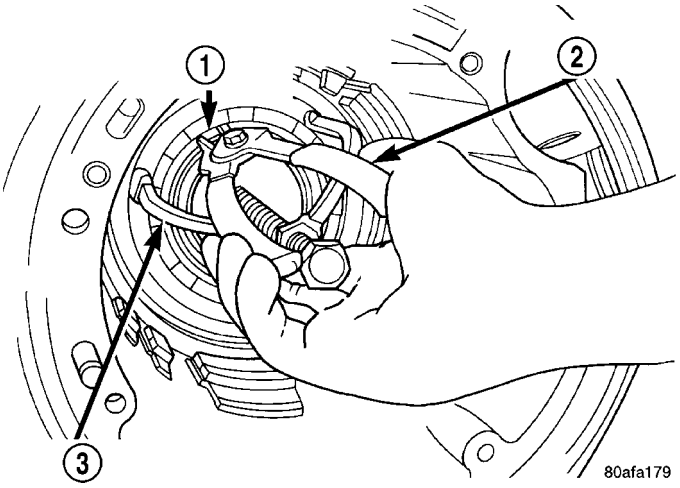

Fig. 92 Install Snap Ring

1 - SNAP RING OPENING MUST BE BETWEEN SPRING LEVERS (AS SHOWN)
2 - SNAP RING PLIERS
3 - TOOL 6057

(11) Install rear carrier bearing cone using Tool 6053 (Fig. 93).

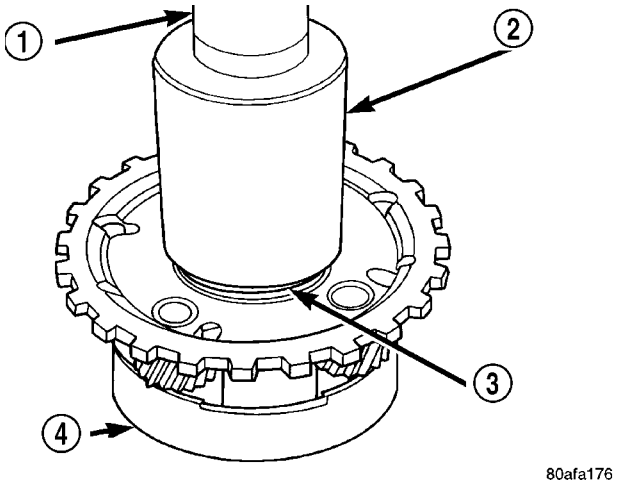

Fig. 93 Install Rear Carrier Bearing Cone

1 - ARBOR PRESS RAM
2 - TOOL 6053
3 - NEW BEARING CONE
4 - REAR CARRIER ASSEMBLY

(12) Install rear carrier assembly to transaxle case (Fig. 94).

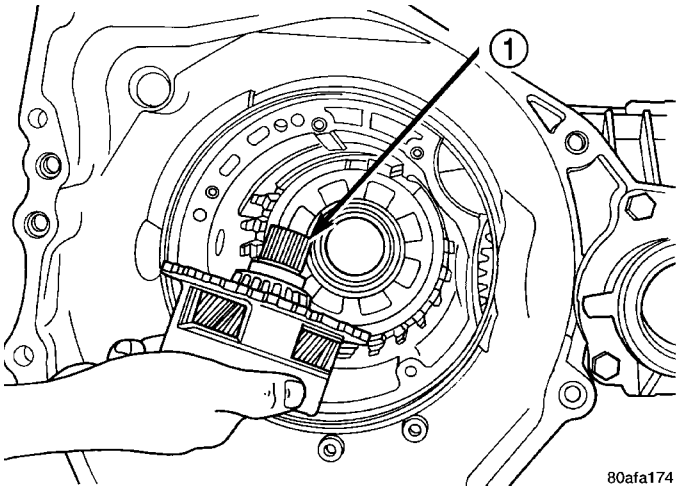

Fig. 94 Install Rear Carrier Assembly

1 - REAR CARRIER ASSEMBLY

41TE AUTOMATIC TRANSAXLE (Continued)

(13) Install output gear bearing cone using Tool 5052 (Fig. 95).

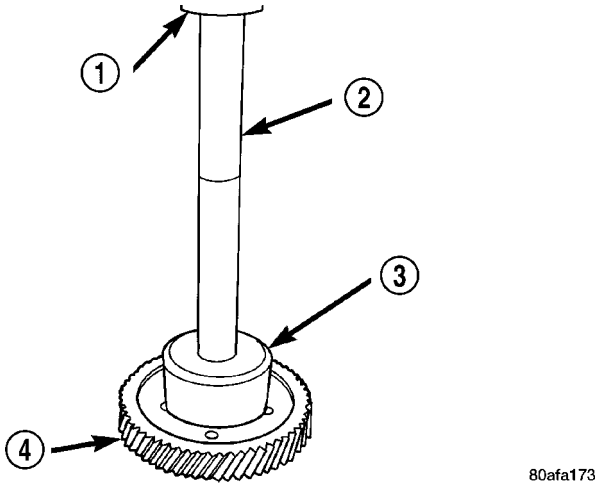

Fig. 95 Install Output Gear Bearing Cone

1 - ARBOR PRESS RAM
2 - HANDLE C-4171
3 - TOOL 5052
4 - OUTPUT GEAR

(14) **OUTPUT GEAR BEARING ADJUSTMENT:**

(a) With output gear removed, install a 4.50 mm (0.177 in.) gauging shim (Fig. 97) on the rear carrier assembly hub, using grease to hold the shim in place.

(b) Using Tool 6259, install output gear and bearing assembly. Torque to 271 N·m (200 ft. lbs.).

(c) Measure bearing end play. Attach Tool L-4432 to the gear (Fig. 96).

(d) Push and pull the gear while rotating back and forth to ensure seating of bearing rollers.

(e) Using a dial indicator mounted to the transaxle case, measure output gear end play as shown in (Fig. 96).

(f) Refer to the output gear bearing shim chart for the required shim to obtain proper bearing setting.

(g) Use Tool 6259 to remove the output gear retaining bolt and washer. To remove the output gear, use Tool L4407A.

(h) Remove the gauging shim and install the proper shim determined by the chart. Use grease to hold the shim in place.

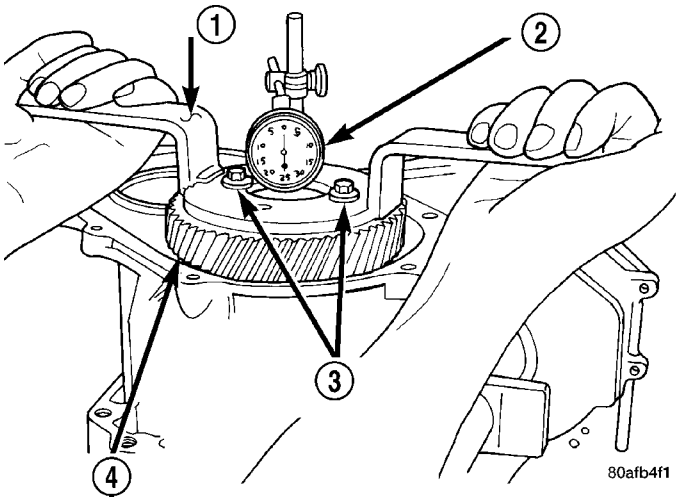

Fig. 96 Checking Output Gear Bearings End Play

1 - TOOL L-4432
2 - DIAL INDICATOR
3 - SPECIAL SCREWS TOOL 6260
4 - OUTPUT GEAR

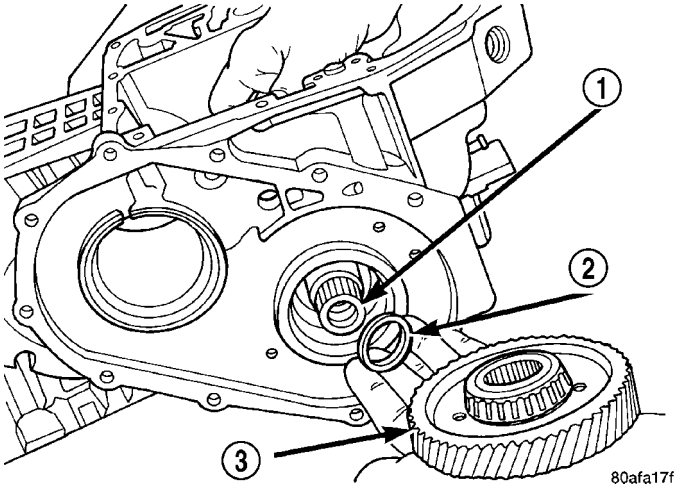

Fig. 97 Output Gear and (Select) Shim

1 - REAR CARRIER ASSEMBLY
2 - SHIM (SELECT)
3 - OUTPUT GEAR

41TE AUTOMATIC TRANSAXLE (Continued)

OUTPUT GEAR BEARING SHIM CHART

End Play	Shim Needed	Part Number	End Play	Shim Needed	Part Number
0.05mm (0.002 in.)	4.42mm (0.174 in.)	4412830AB	0.53mm (0.021 in.)	3.94mm (0.155 in.)	4412818AB
0.08mm (0.003 in.)	4.38mm (0.172 in.)	4412829AB	0.56mm (0.022 in.)	3.90mm (0.154 in.)	4412817AB
0.10mm (0.004 in.)	4.38mm (0.172 in.)	4412829AB	0.58mm (0.023 in.)	3.90mm (0.154 in.)	4412817AB
0.13mm (0.005 in.)	4.34mm (0.171 in.)	4412828AB	0.61mm (0.024 in.)	3.86mm (0.152 in.)	4412816AB
0.15mm (0.006 in.)	4.30mm (0.169 in.)	4412827AB	0.64mm (0.025 in.)	3.82mm (0.150 in.)	4412815AB
0.18mm (0.007 in.)	4.30mm (0.169 in.)	4412827AB	0.66mm (0.026 in.)	3.82mm (0.150 in.)	4412815AB
0.20mm (0.008 in.)	4.26mm (0.168 in.)	4412826AB	0.69mm (0.027 in.)	3.78mm (0.149 in.)	4412814AB
0.23mm (0.009 in.)	4.22mm (0.166 in.)	4412825AB	0.71mm (0.028 in.)	3.74mm (0.147 in.)	4412813AB
0.25mm (0.010 in.)	4.22mm (0.166 in.)	4412825AB	0.74mm (0.029 in.)	3.74mm (0.147 in.)	4412813AB
0.28mm (0.011 in.)	4.18mm (0.165 in.)	4412824AB	0.76mm (0.030 in.)	3.70mm (0.146 in.)	4412812AB
0.30mm (0.012 in.)	4.14mm (0.163 in.)	4412823AB	0.79mm (0.031 in.)	3.66mm (0.144 in.)	4412811AB
0.33mm (0.013 in.)	4.14mm (0.163 in.)	4412823AB	0.81mm (0.032 in.)	3.66mm (0.144 in.)	4412811AB
0.36mm (0.014 in.)	4.10mm (0.161 in.)	4412822AB	0.84mm (0.033 in.)	3.62mm (0.143 in.)	4412810AB
0.38mm (0.015 in.)	4.10mm (0.161 in.)	4412822AB	0.86mm (0.034 in.)	3.62mm (0.143 in.)	4412810AB
0.41mm (0.016 in.)	4.06mm (0.160 in.)	4412821AB	0.89mm (0.035 in.)	3.58mm (0.141)	4412809AB
0.43mm (0.017 in.)	4.02mm (0.158 in.)	4412820AB	0.91mm (0.036in.)	3.54mm (0.139 in.)	4412808AB
0.46mm (0.018 in.)	4.02mm (0.158 in.)	4412820AB	0.94mm (0.037 in.)	3.54mm (0.139 in.)	4412808AB
0.48mm (0.019 in.)	3.98mm (0.157 in.)	4412819AB	0.97mm (0.038 in.)	3.50mm (0.138 in.)	4412807AB
0.51mm (0.020 in.)	3.94mm (0.155 in.)	4412818AB			

41TE AUTOMATIC TRANSAXLE (Continued)

(15) Install the output gear and bearing assembly using Tool 6261 (Fig. 98).

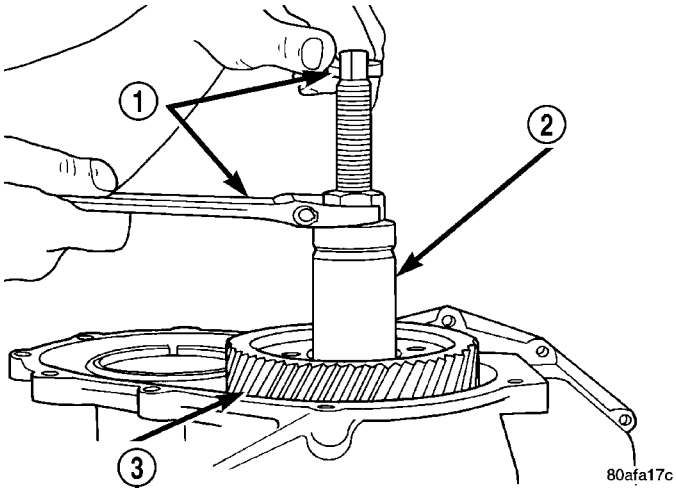

Fig. 98 Install Output Gear

1 - WRENCHES
2 - TOOL 6261 WITH STUD
3 - OUTPUT GEAR

(16) Install NEW output gear retaining bolt and washer (Fig. 99). Using Tool 6259, torque output gear retaining bolt to 271 N·m (200 ft. lbs.) (Fig. 100).

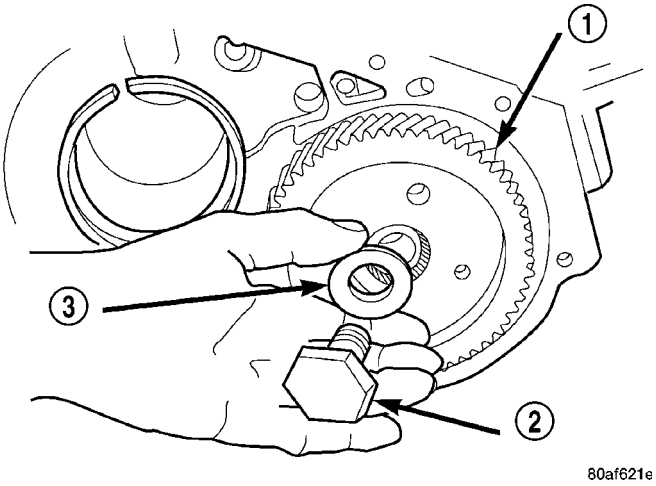

Fig. 99 Output Gear Bolt and Washer

1 - OUTPUT GEAR
2 - BOLT
3 - CONED LOCK WASHER

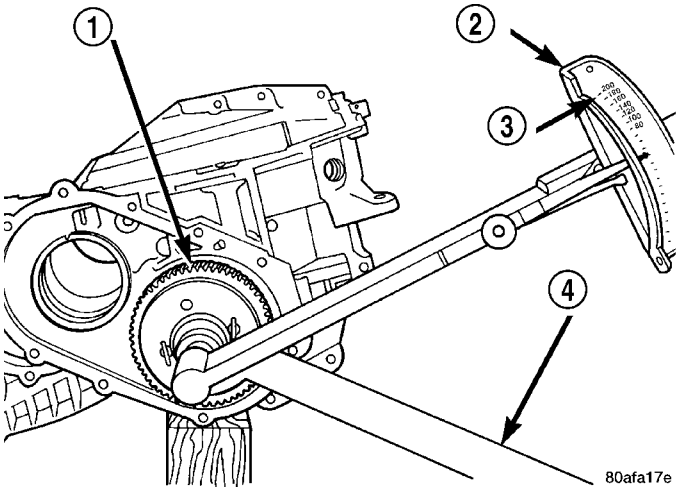

Fig. 100 Tighten Output Gear to 271 N•m (200 ft. lbs.)

1 - OUTPUT GEAR
2 - TORQUE WRENCH
3 - 200 FT. LBS.
4 - TOOL 6259

(17) Using an inch pound torque wrench (Fig. 101), check output shaft turning torque. **Output shaft turning torque should be within 3-8 in. lbs.** If the turning torque is too high, install a 0.04 mm (0.0016 in.) thicker shim. If the turning torque is too low, install a 0.04 mm (0.0016 in.) thinner shim. Repeat until the proper turning torque of 3-8 in. lbs. is obtained.

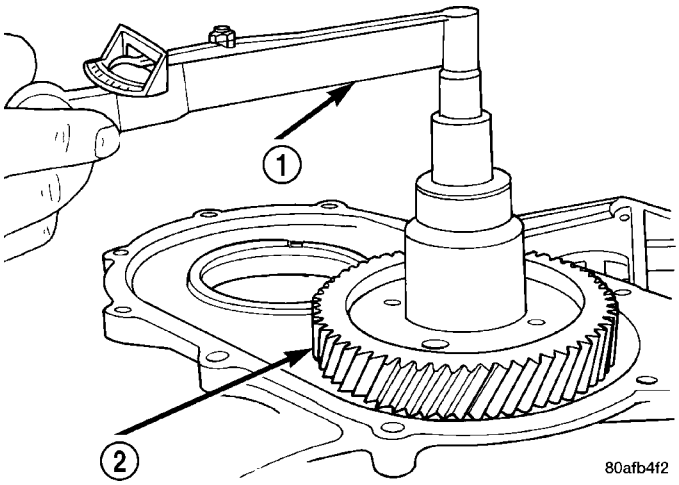

Fig. 101 Check Output Gear Bearings Turning Torque

1 - INCH-POUND TORQUE WRENCH
2 - OUTPUT GEAR

41TE AUTOMATIC TRANSAXLE (Continued)

(18) Install output gear stirrup with serrated side out (Fig. 102).

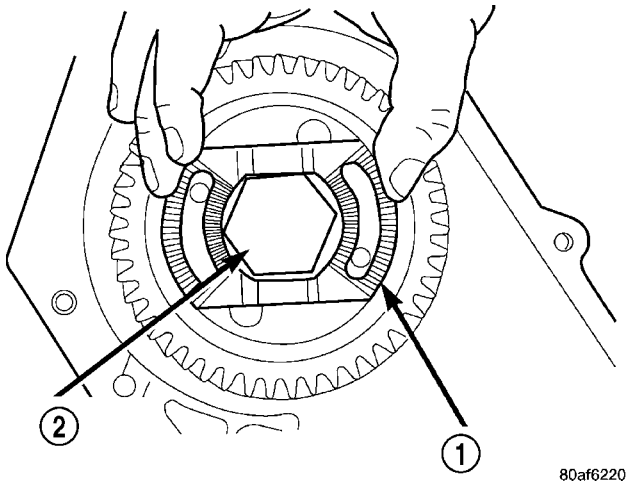

Fig. 102 Install Stirrup

1 - STIRRUP
2 - OUTPUT GEAR RETAINING BOLT

(19) Install retaining strap.

(20) Install strap bolts but do not tighten at this time (Fig. 103).

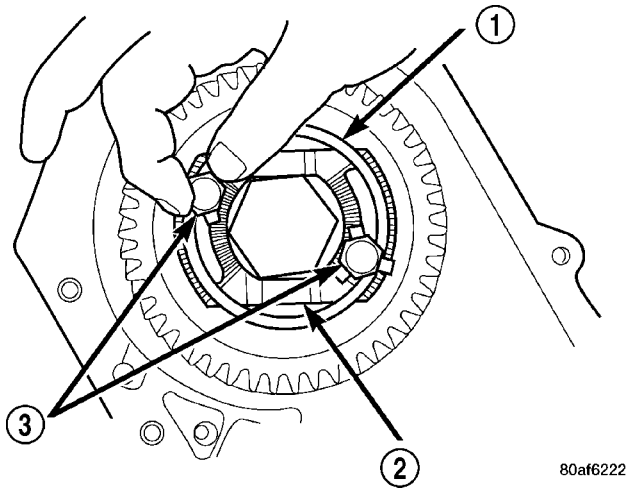

Fig. 103 Install Strap Bolts

1 - RETAINING STRAP
2 - STIRRUP
3 - RETAINING STRAP BOLTS

(21) Rotate stirrup clockwise against flats of retaining bolt (Fig. 104).

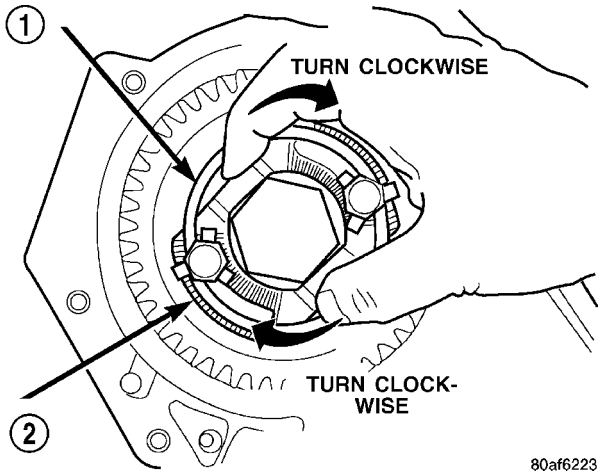

Fig. 104 Turn Stirrup Clockwise Against Bolt Flats

1 - RETAINING STRAP
2 - STIRRUP

(22) Torque stirrup strap bolts to 23 N·m (200 in. lbs.) (Fig. 105).

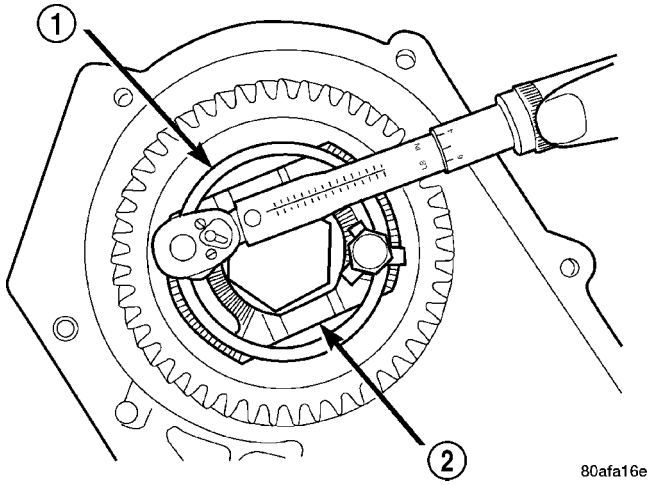

Fig. 105 Tighten Stirrup Strap Bolts To 23 N·m (200 in.) lbs.)

1 - RETAINING STRAP
2 - STIRRUP

41TE AUTOMATIC TRANSAXLE (Continued)

(23) Bend tabs on strap up against flats of bolts (Fig. 106).

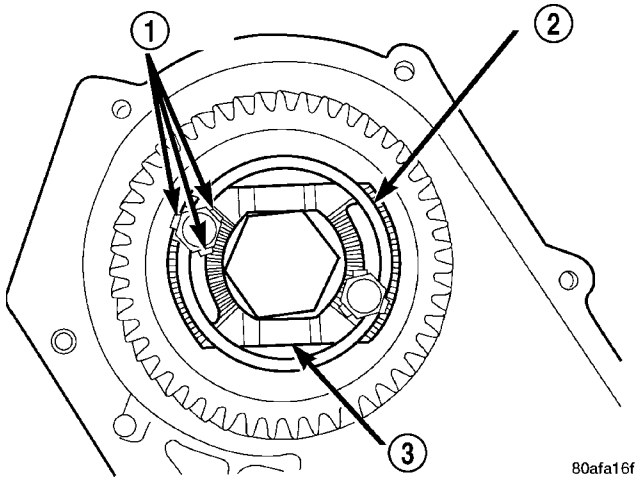

Fig. 106 Bend Tabs On Strap Up Against Flats Of Bolts

1 - RETAINING STRAP TABS
2 - RETAINING STRAP
3 - STIRRUP

(24) Install transfer shaft bearing cone using Tool 6052 (Fig. 107).

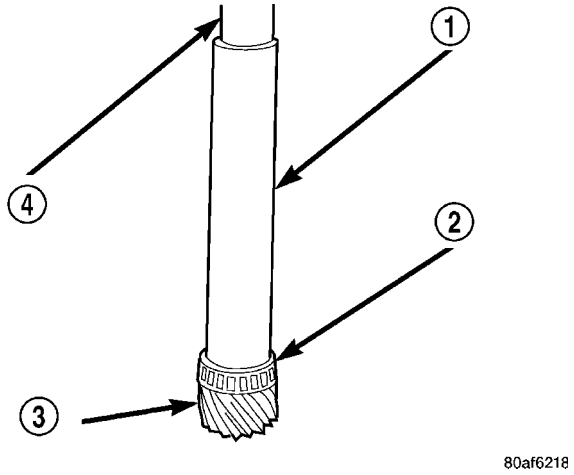

Fig. 107 Install Transfer Shaft Bearing Cone

1 - TOOL 6052
2 - NEW BEARING CONE
3 - TRANSFER SHAFT
4 - ARBOR PRESS RAM

(25) Install bearing cup and oil baffle to transfer shaft (Fig. 108).

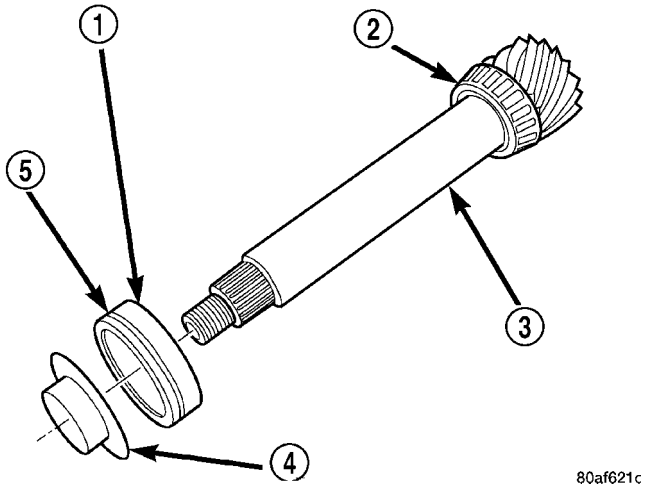

Fig. 108 Install Bearing Cup to Shaft

1 - BEARING CUP
2 - BEARING CONE
3 - TRANSFER SHAFT
4 - OIL BAFFLE
5 - O-RING

(26) Using Tool 5049A, install transfer shaft (Fig. 109).

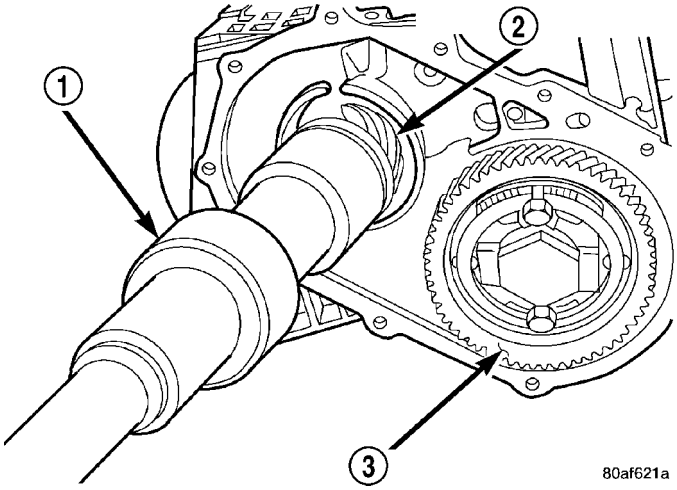

Fig. 109 Install Transfer Shaft

1 - SPECIAL TOOL 5049–A
2 - TRANSFER SHAFT
3 - OUTPUT GEAR

41TE AUTOMATIC TRANSAXLE (Continued)

(27) Using Tool 6051, install transfer shaft bearing snap ring (Fig. 110).

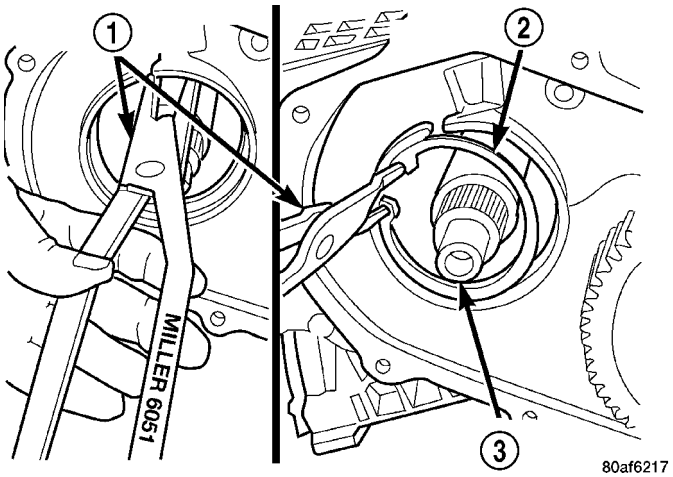

Fig. 110 Install Transfer Shaft Bearing Snap Ring

1 - SNAP RING PLIERS TOOL 6051
2 - TRANSFER SHAFT BEARING SNAP RING
3 - TRANSFER SHAFT

(28) Install transfer shaft bearing cup into retainer using Tool 6061 (Fig. 111).

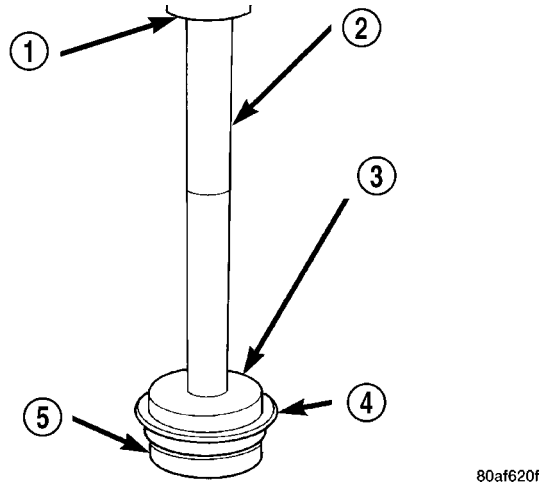

Fig. 111 Install Transfer Shaft Bearing Cup Into Retainer

1 - ARBOR PRESS RAM
2 - HANDLE C-4171
3 - TOOL 6061
4 - TRANSFER SHAFT BEARING CUP RETAINER
5 - USE REMOVED BEARING CUP TO SUPPORT RETAINER

(29) Install bearing cup retainer to transaxle (Fig. 112).

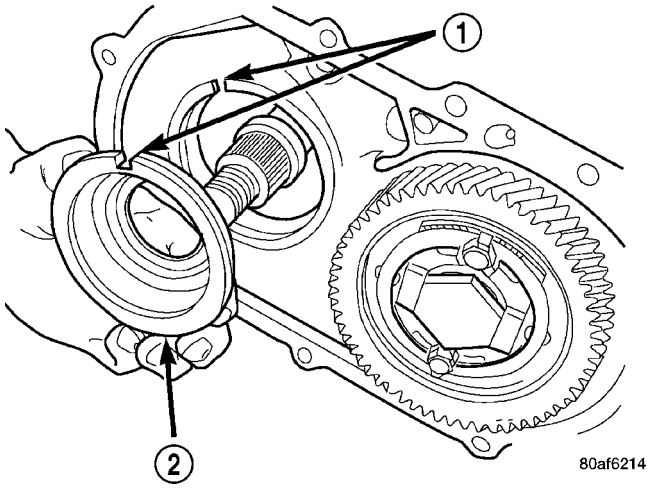

Fig. 112 Remove Bearing Cup Retainer

1 - ALIGN INDEXING TAB TO SLOT
2 - BEARING CUP RETAINER

(30) Install transfer gear bearing cone to transfer gear using Tool 5052 (Fig. 113).

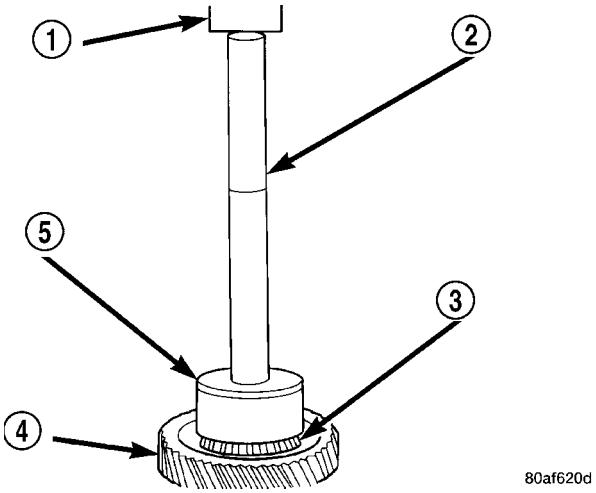

Fig. 113 Install Transfer Gear Bearing Cone

1 - ARBOR PRESS RAM
2 - HANDLE C-4171
3 - NEW BEARING CONE
4 - TRANSFER SHAFT GEAR
5 - TOOL 5052

41TE AUTOMATIC TRANSAXLE (Continued)

(31) **TRANSFER GEAR BEARING ADJUSTMENT:**

(a) Install a 4.66 mm (0.184 in.) gauging shim on the transfer shaft (Fig. 114).

(b) Install transfer shaft gear using Tool 6261. Using Tool 6259, install transfer shaft gear retaining nut to 271 N·m (200 ft. lbs.).

(c) Measure end play. Attach Tool L4432 to the transfer gear.

(d) Mount a steel ball with grease into the end of the transfer shaft.

(e) Push and pull the gear while rotating back and forth to ensure seating of the bearing rollers.

(f) Using a dial indicator, measure transfer shaft end play.

(g) Refer to the transfer shaft bearing shim chart for the required shim combination to obtain the proper bearing setting.

(h) Use Tool 6259 to remove the retaining nut and washer. Remove the transfer shaft gear using Tool L4407A.

(i) Remove the gauging shim (Fig. 114) and install the proper shim indicated by the chart.

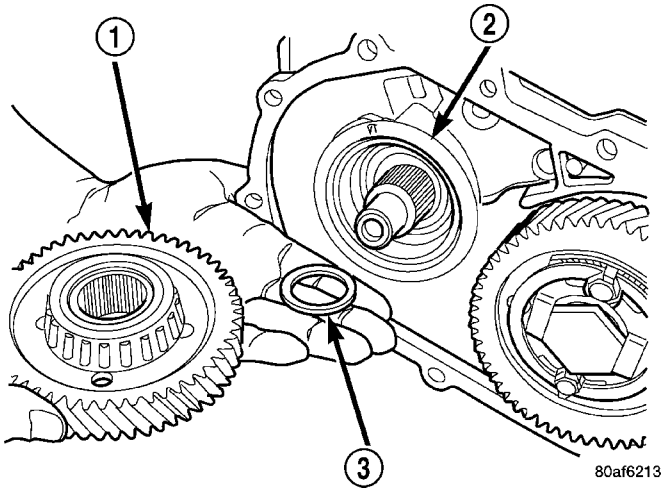

Fig. 114 Install Transfer Shaft Gear and (Select) Shim

1 - TRANSFER SHAFT GEAR
2 - BEARING CUP RETAINER
3 - SHIM (SELECT)

41TE AUTOMATIC TRANSAXLE (Continued)

TRANSFER SHAFT BEARING SHIM CHART

End Play	Shim Needed	Part Number	End Play	Shim Needed	Part Number
0.05mm (0.002 in.)	4.66mm (0.183 in.)	4505588AB	0.76mm (0.030 in.)	3.94mm (0.155 in.)	4412818AB
0.08mm (0.003 in.)	4.62mm (0.182 in.)	4412835AB	0.79mm (0.031 in.)	3.90mm (0.154 in.)	4412817AB
0.10mm (0.004 in.)	4.58mm (0.180 in.)	4412834AB	0.81mm (0.032 in.)	3.90mm (0.154 in.)	4412817AB
0.13mm (0.005 in.)	4.58mm (0.180 in.)	4412834AB	0.84mm (0.033 in.)	3.86mm (0.152 in.)	4412816AB
0.15mm (0.006 in.)	4.54mm (0.178 in.)	4412833AB	0.86mm (0.034 in.)	3.82mm (0.150 in.)	4412815AB
0.18mm (0.007 in.)	4.50mm (0.177 in.)	4412832AB	0.89mm (0.035 in.)	3.82mm (0.150 in.)	4412815AB
0.20mm (0.008 in.)	4.50mm (0.177 in.)	4412832AB	0.91mm (0.036 in.)	3.78mm (0.149 in.)	4412814AB
0.23mm (0.009 in.)	4.46mm (0.175 in.)	4412831AB	0.94mm (0.037 in.)	3.74mm (0.147 in.)	4412813AB
0.25mm (0.010 in.)	4.46mm (0.175 in.)	4412831AB	0.97mm (0.038 in.)	3.74mm (0.147 in.)	4412813AB
0.28mm (0.011 in.)	4.42mm (0.174 in.)	4412830AB	0.99mm (0.039 in.)	3.70mm (0.146 in.)	4412812AB
0.30mm (0.012 in.)	4.38mm (0.172 in.)	4412829AB	1.02mm (0.040 in.)	3.66mm (0.144 in.)	4412811AB
0.33mm (0.013 in.)	4.38mm (0.172 in.)	4412829AB	1.04mm (0.041 in.)	3.66mm (0.144 in.)	4412811AB
0.36mm (0.014 in.)	4.34mm (0.171 in.)	4412828AB	1.07mm (0.042 in.)	3.62mm (0.143 in.)	4412810AB
0.38mm (0.015 in.)	4.30mm (0.169 in.)	4412827AB	1.08mm (0.043 in.)	3.62mm (0.143 in.)	4412810AB
0.41mm (0.016 in.)	4.30mm (0.169 in.)	4412827AB	1.12mm (0.044 in.)	3.58mm (0.141)	4412809AB
0.43mm (0.017 in.)	4.26mm (0.168 in.)	4412826AB	1.14mm (0.045 in.)	3.54mm (0.139 in.)	4412808AB
0.46mm (0.018 in.)	4.22mm (0.166 in.)	4412825AB	1.17mm (0.046 in.)	3.54mm (0.139 in.)	4412808AB
0.48mm (0.019 in.)	4.22mm (0.166 in.)	4412825AB	1.19mm (0.047 in.)	3.50mm (0.138 in.)	4412807AB
0.50mm (0.020 in.)	4.18mm (0.165 in.)	4412824AB	1.22mm (0.048 in.)	3.46mm (0.136 in.)	4412806AB
0.53mm (0.021 in.)	4.18mm (0.165 in.)	4412824AB	1.24mm (0.049 in.)	3.46mm (0.136 in.)	4412806AB
0.56mm (0.022 in.)	4.14mm (0.163 in.)	4412823AB	1.27mm (0.050 in.)	3.42mm (0.135 in.)	4412805AB
0.58mm (0.023 in.)	4.10mm (0.161 in.)	4412822AB	1.30mm (0.051 in.)	3.38mm (0.133 in.)	4412804AB
0.61mm (0.024 in.)	4.10mm (0.161 in.)	4412822AB	1.32mm (0.052 in.)	3.38mm (0.133 in.)	4412804AB
0.64mm (0.025 in.)	4.06mm (0.160 in.)	4412821AB	1.35mm (0.053 in.)	3.34mm (0.132 in.)	4412803AB
0.66mm (0.026 in.)	4.02mm (0.158 in.)	4412820AB	1.37mm (0.054 in.)	3.34mm (0.132 in.)	4412803AB
0.69mm (0.027 in.)	4.02mm (0.158 in.)	4412820AB	1.40mm (0.055 in.)	3.30mm (0.130 in.)	4412802AB
0.71mm (0.028 in.)	3.98mm (0.157 in.)	4412819AB	1.45mm (0.057 in	3.26mm (0.128 in.)	4412801AB
0.74mm (0.029 in.)	3.94mm (0.155 in.)	4412818AB	1.47mm (0.058 in.)	2.22mm (0.127 in.)	4505570AB

41TE AUTOMATIC TRANSAXLE (Continued)

(32) Install the transfer shaft gear using Tool 6261 (Fig. 115).

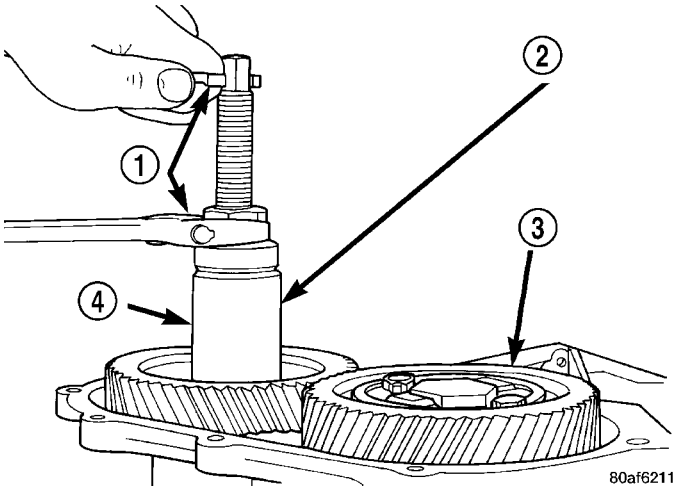

Fig. 115 Install Transfer Shaft Gear

1 - WRENCHES
2 - SPECIAL TOOL 6261
3 - OUTPUT GEAR
4 - TRANSFER SHAFT GEAR

CAUTION: Install a NEW retaining nut, as the original nut MUST NOT be reused.

(33) Install the new retaining nut and washer.

(34) Using Tool 6259, torque transfer gear retaining nut to 271 N·m (200 ft. lbs.) (Fig. 116).

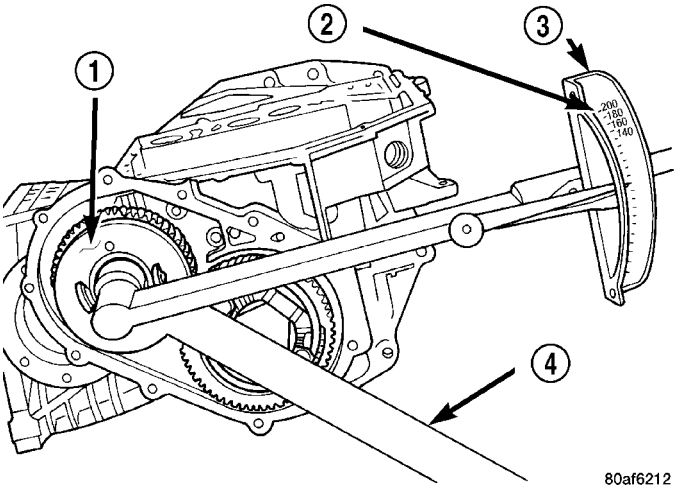

Fig. 116 Tighten Transfer Gear Nut to 271 N•m (200 ft. lbs.)

1 - TRANSFER SHAFT GEAR
2 - 200 FT. LBS.
3 - TORQUE WRENCH
4 - SPECIAL TOOL 6259

(35) Measure transfer shaft end play. **Transfer shaft end play should be within 0.05-0.10 mm (0.002-0.004 in.).** If the end play is too high, install a 0.04 mm (0.0016 in.) thicker shim. If the end play is too low, install a 0.04 mm (0.0016 in.) thinner shim. Repeat until 0.05-0.10 mm (0.002-0.004 in.) end play is obtained.

(36) Install a bead of Mopar® ATF RTV (MS-GF41) to transfer gear cover (Fig. 117).

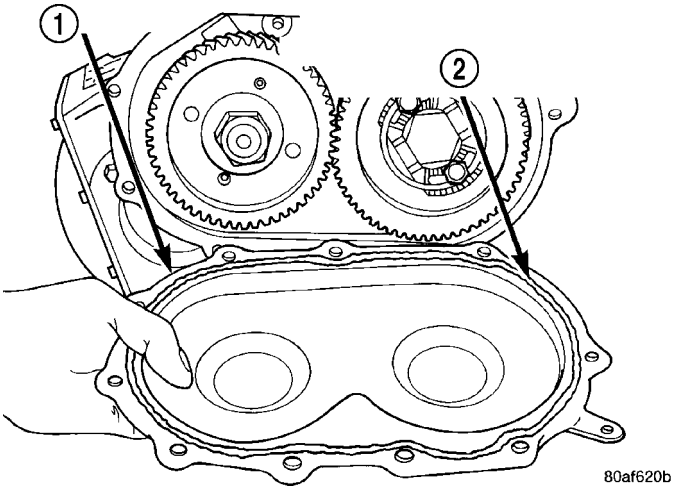

Fig. 117 Install Rear Cover

1 - REAR COVER
2 - 1/8 INCH BEAD OF MOPAR® ATF RTV (MS-GF41) AS SHOWN

(37) Install transfer gear cover-to-case bolts and torque to 20 N·m (175 in. lbs.) torque (Fig. 118).

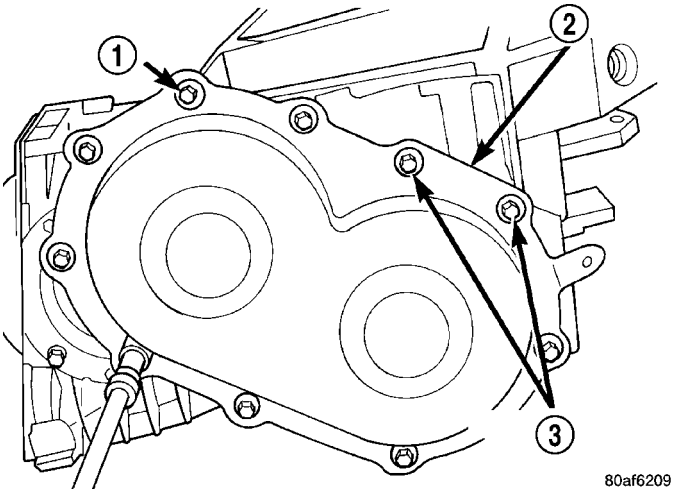

Fig. 118 Install Rear Cover Bolts

1 - REAR COVER BOLTS
2 - REAR COVER
3 - USE SEALANT ON BOLTS

41TE AUTOMATIC TRANSAXLE (Continued)

(38) Install low/reverse clutch pack (Fig. 119). Leave uppermost disc out until snap ring is installed.

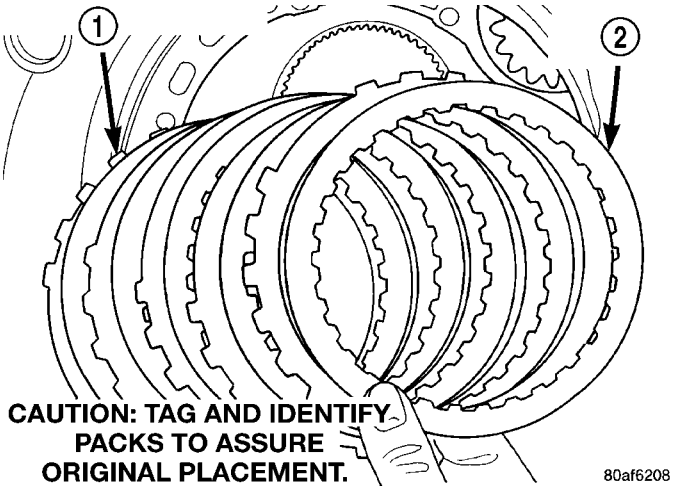

Fig. 119 Install Low/Reverse Clutch Pack

1 - CLUTCH PLATES (5)
2 - CLUTCH DISCS (5)

(39) Install low/reverse reaction plate flat snap ring (Fig. 120).

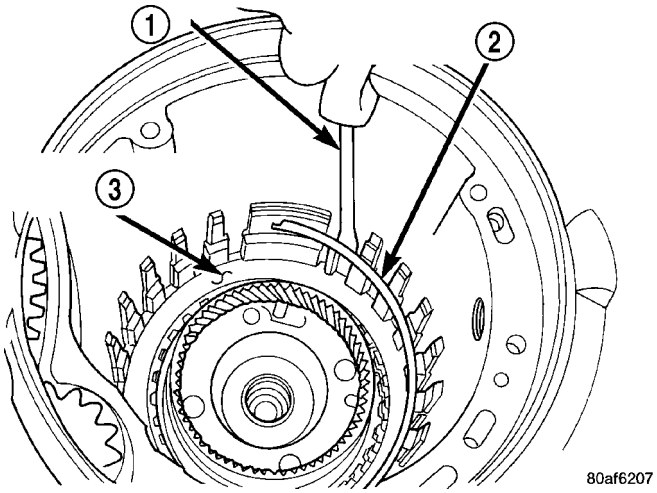

Fig. 120 Install Low/Reverse Reaction Plate Snap Ring

1 - SCREWDRIVER
2 - LOW/REVERSE REACTION PLATE FLAT SNAP RING
3 - DO NOT SCRATCH CLUTCH PLATE

(40) Install remaining low/reverse clutch disc (Fig. 121).

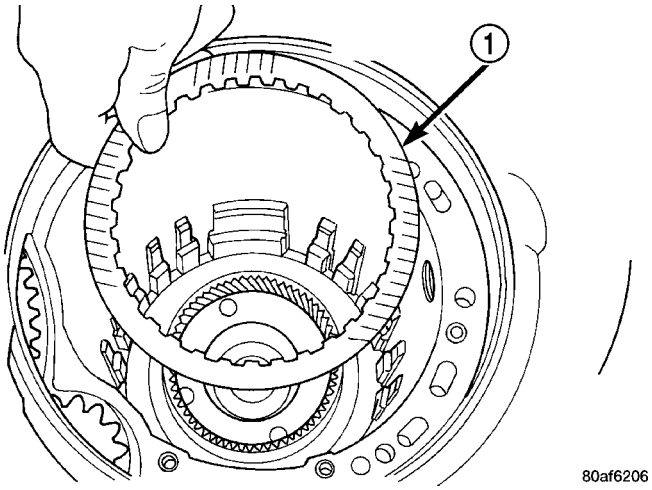

Fig. 121 Install One Disc

1 - ONE DISC FROM LOW/REVERSE CLUTCH

(41) Install low/reverse reaction plate with flat side up (Fig. 122).

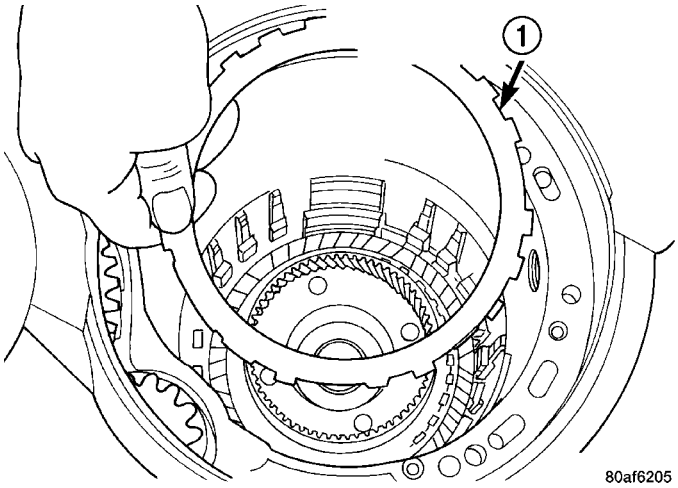

Fig. 122 Install Low/Reverse Reaction Plate

1 - LOW/REVERSE REACTION PLATE (FLAT SIDE UP)

41TE AUTOMATIC TRANSAXLE (Continued)

(42) Install tapered snap ring (with tapered side up) as shown in (Fig. 123) (Fig. 124).

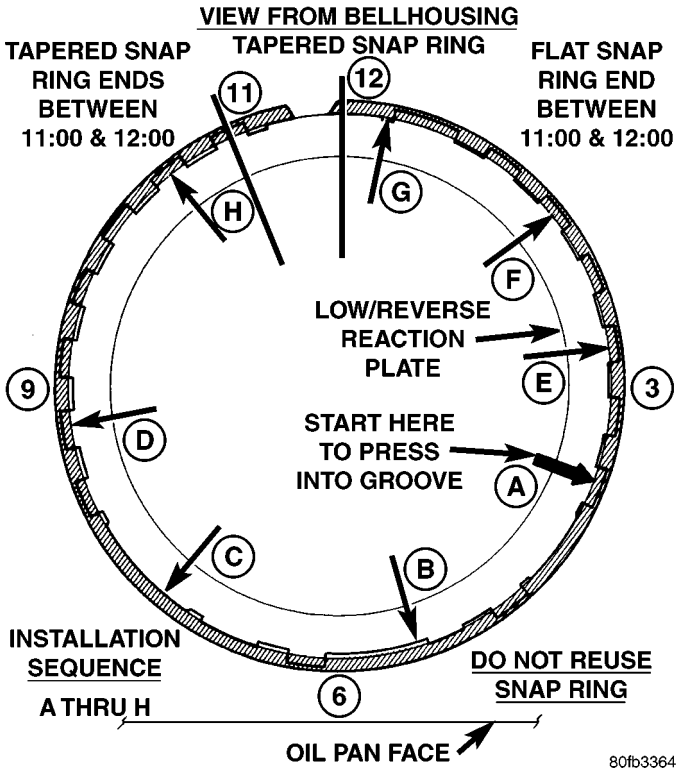

Fig. 123 Tapered Snap Ring Instructions

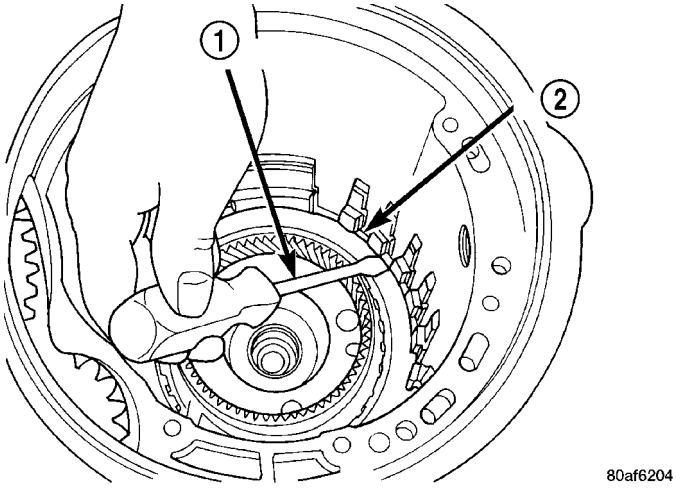

Fig. 124 Snap Ring Installed

1 - SCREWDRIVER
2 - TAPERED SNAP RING (INSTALL AS SHOWN)

(43) Set up dial indicator as shown in (Fig. 125) to measure low/reverse clutch clearance. Press down on clutch pack with finger and zero dial indicator. **Low/Reverse clutch pack clearance is 0.89-1.47 mm (0.035-0.058 in.)**. Set up indicator and record measurement in four (4) places. Take average of readings and select the proper low/reverse reaction plate to achieve specifications.

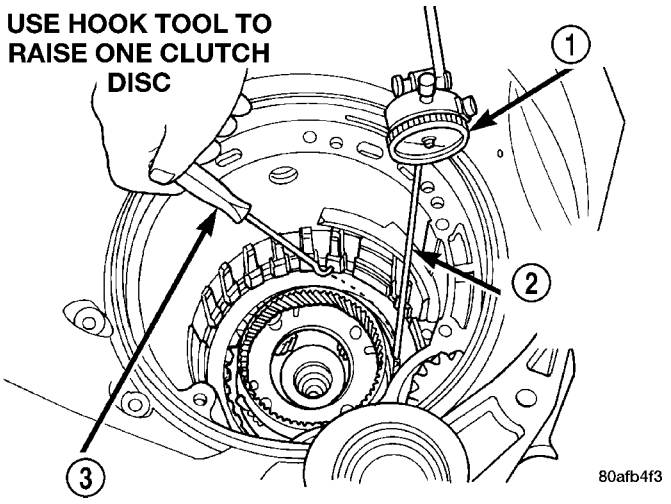

Fig. 125 Check Low/Reverse Clutch Clearance

1 - DIAL INDICATOR
2 - DIAL INDICATOR TIP TOOL 6268
3 - HOOK TOOL

LOW/REVERSE REACTION PLATE CHART

PART NUMBER	THICKNESS
4799846AA	5.88 mm (0.232 in.)
4799847AA	6.14 mm (0.242 in.)
4799848AA	6.40 mm (0.252 in.)
4799849AA	6.66 mm (0.262 in.)
4799855AA	6.92 mm (0.273 in.)

(44) Install 2/4 clutch pack (Fig. 126).

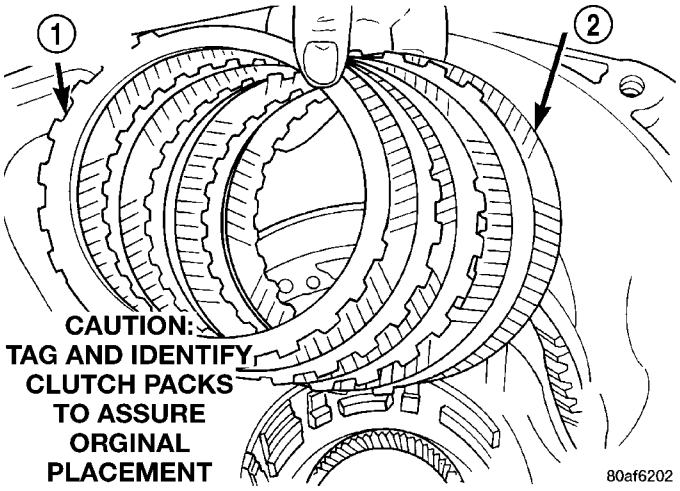

Fig. 126 Install 2/4 Clutch Pack

1 - CLUTCH PLATE (4)
2 - CLUTCH DISC (4)

41TE AUTOMATIC TRANSAXLE (Continued)

(45) Orient 2/4 clutch return spring to retainer as shown in (Fig. 127), and install to transaxle (Fig. 128).

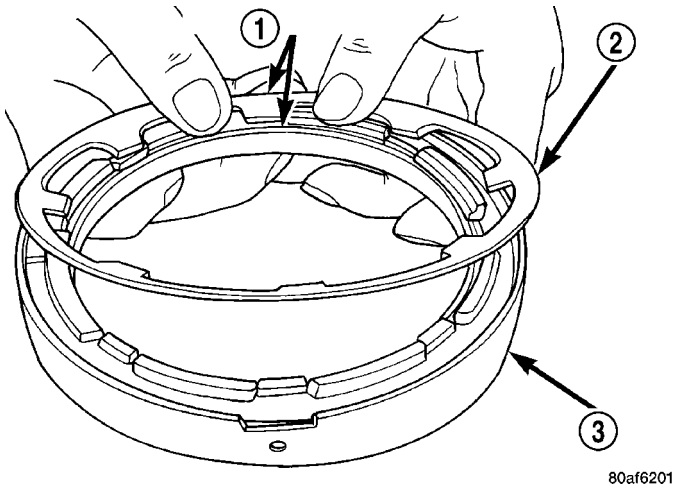

Fig. 127 Proper Orientation of 2/4 Clutch Retainer and Spring

1 - NOTE POSITION
2 - RETURN SPRING
3 - 2/4 CLUTCH RETAINER

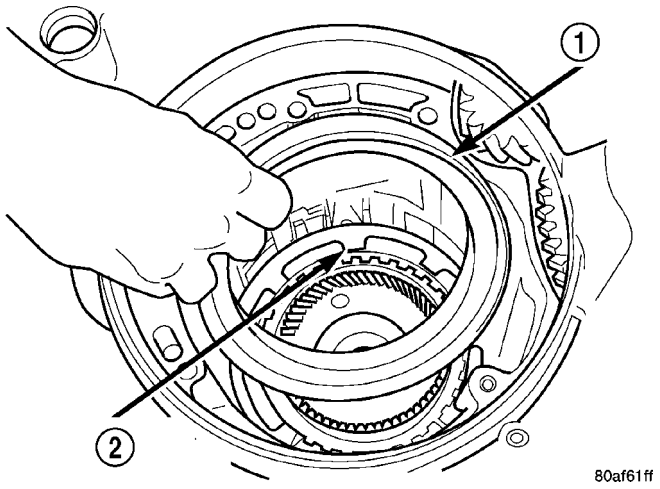

Fig. 128 2/4 Clutch Retainer

1 - 2/4 CLUTCH RETAINER
2 - 2/4 CLUTCH RETURN SPRING

(46) Using tool 5058, compress 2/4 clutch return spring just enough to install snap ring (Fig. 129).

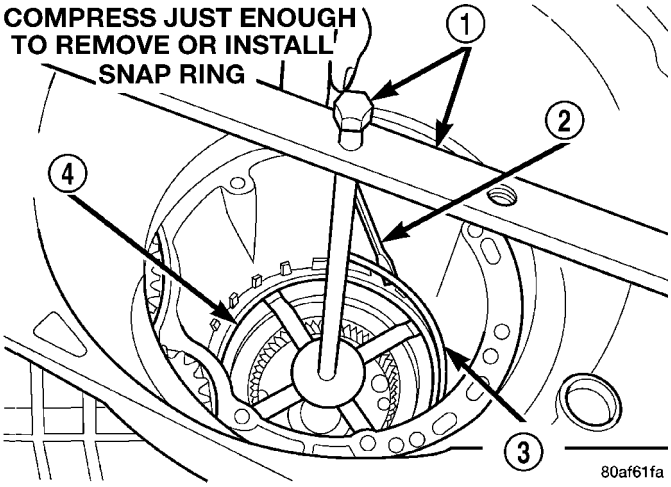

Fig. 129 Install 2/4 Clutch Retainer Snap Ring

1 - TOOL 5058
2 - SCREWDRIVER
3 - SNAP RING
4 - 2/4 CLUTCH RETAINER

(47) Install snap ring.

(48) Set up dial indicator as shown in (Fig. 130) and measure 2/4 clutch clearance. Press down on clutch pack with finger and zero dial indicator. **2/4 clutch pack clearance is 0.76-2.64 mm (0.030-0.104 in.).** Set up indicator and record measurement in four (4) places. Take average of readings. If clearance is outside this range, the clutch is assembled improperly. **There is no adjustment for 2/4 clutch clearance.**

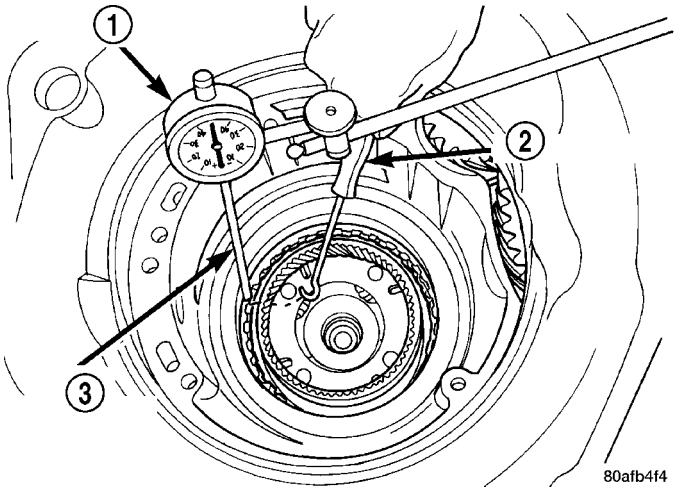

Fig. 130 Check 2/4 Clutch Clearance

1 - DIAL INDICATOR
2 - HOOK TOOL
3 - DIAL INDICATOR TIP TOOL 6268

41TE AUTOMATIC TRANSAXLE (Continued)

(49) Install rear sun gear and #7 needle bearing (Fig. 132).

NOTE: The number seven needle bearing has three anti-reversal tabs and is common with the number five and number two position. The orientation should allow the bearing to seat flat against the rear sun gear (Fig. 131). A small amount of petrolatum can be used to hold the bearing to the rear sun gear.

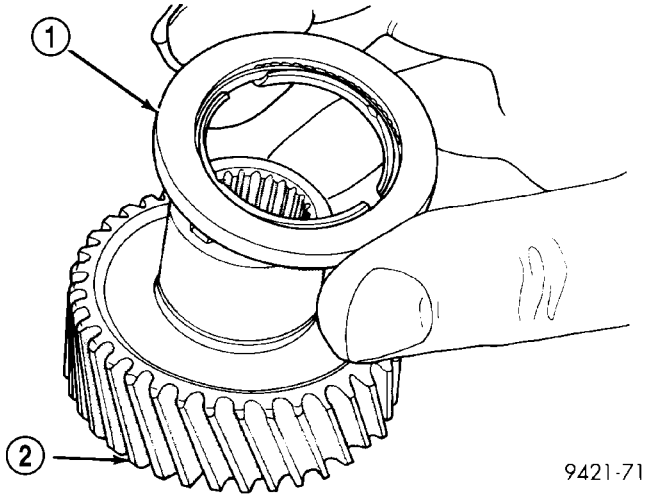

Fig. 131 Number 7 Bearing

1 - #7 NEEDLE BEARING
2 - REAR SUN GEAR

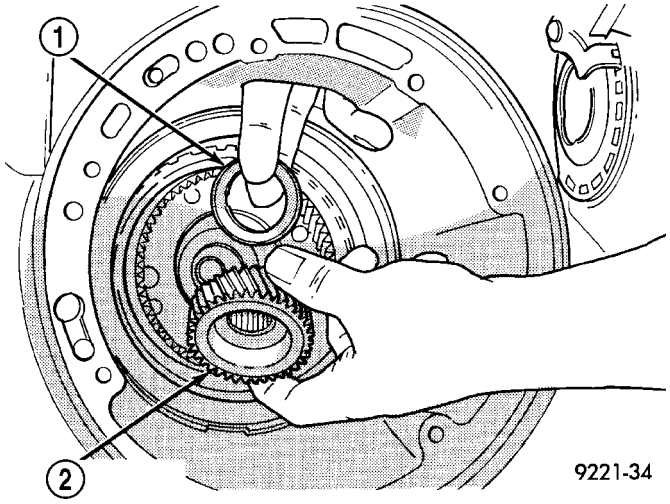

Fig. 132 Install Rear Sun Gear and #7 Needle Bearing

1 - #7 NEEDLE BEARING
2 - REAR SUN GEAR

(50) Install front carrier/rear annulus assembly and #6 needle bearing (Fig. 133).

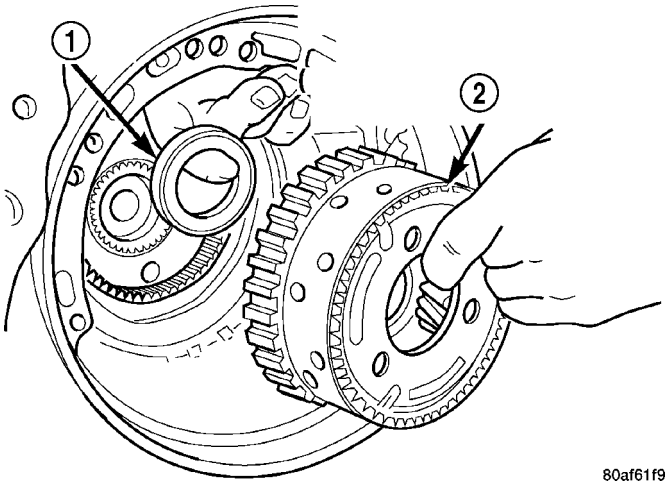

Fig. 133 Install Front Carrier and Rear Annulus Assembly

1 - #6 NEEDLE BEARING
2 - FRONT CARRIER AND REAR ANNULUS ASSEMBLY (TWIST AND PULL OR PUSH TO REMOVE OR INSTALL).

(51) Install front sun gear assembly and #4 thrust washer (Fig. 134).

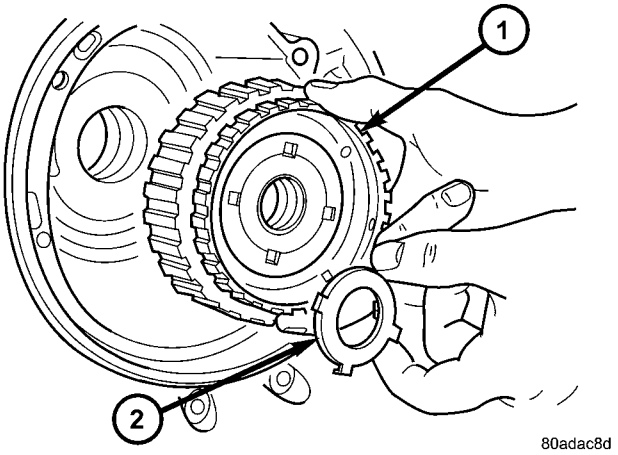

Fig. 134 Install Front Sun Gear Assembly

1 - FRONT SUN GEAR ASSEMBLY
2 - #4 THRUST WASHER (FOUR TABS)

41TE AUTOMATIC TRANSAXLE (Continued)

(52) **DETERMINING #4 THRUST PLATE THICKNESS / INPUT SHAFT END PLAY:**

(a) Select the thinnest #4 thrust plate thickness and install to input clutch assembly (Fig. 135). Use petrolatum to retain.

(b) Install input clutch assembly into position and verify that it is completely seated by viewing through input speed sensor hole. If view through input speed sensor hole is not as shown in (Fig. 136), the input clutch assembly is not seated properly.

(c) Remove oil pump o-ring (Fig. 137). **Be sure to reinstall oil pump o-ring after selecting the proper #4 thrust plate.**

(d) Install pump and gasket to transmission. Install and torque bolts.

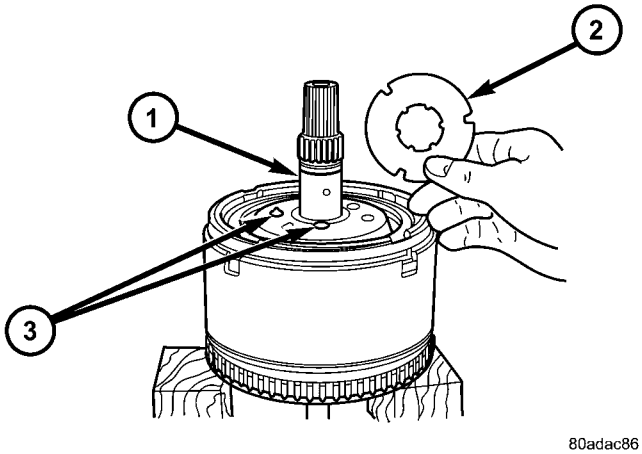

Fig. 135 Select Thinnest No. 4 Thrust Plate

1 - OVERDRIVE SHAFT ASSEMBLY
2 - #4 THRUST PLATE (SELECT)
3 - 3 DABS OF PETROLATUM FOR RETENTION

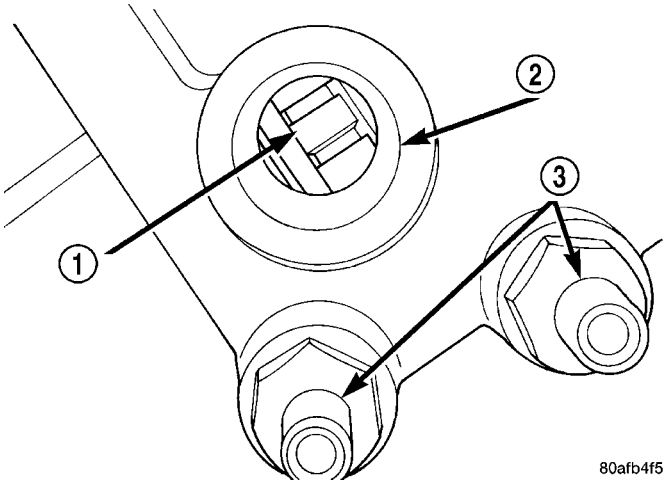

Fig. 136 View Through Input Speed Sensor Hole

1 - INPUT CLUTCH RETAINER
2 - INPUT SPEED SENSOR HOLE
3 - OIL COOLER FITTINGS

(e) Set up input shaft for measurement with Indicator Set C3339 and End Play Set 8266 as shown in (Fig. 138).

(f) Measure the input shaft end play with the transaxle in the vertical position. **Input shaft end play must be within 0.005 to 0.025 inch.** For example, if end play reading is 0.055 inch, select No. 4 Thrust Plate which is 0.071 to 0.074 thick. This should provide an input shaft end play reading of 0.020 inch which is within specifications.

(g) Refer to the No. 4 thrust plate chart to select the proper No. 4 thrust plate:

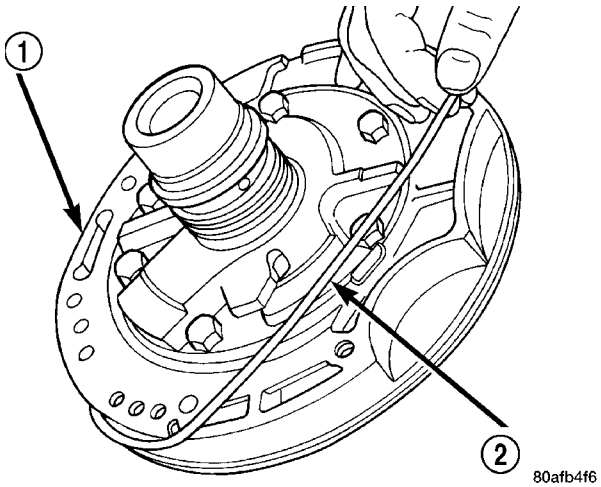

Fig. 137 Remove Oil Pump O-Ring

1 - OIL PUMP ASSEMBLY
2 - O-RING

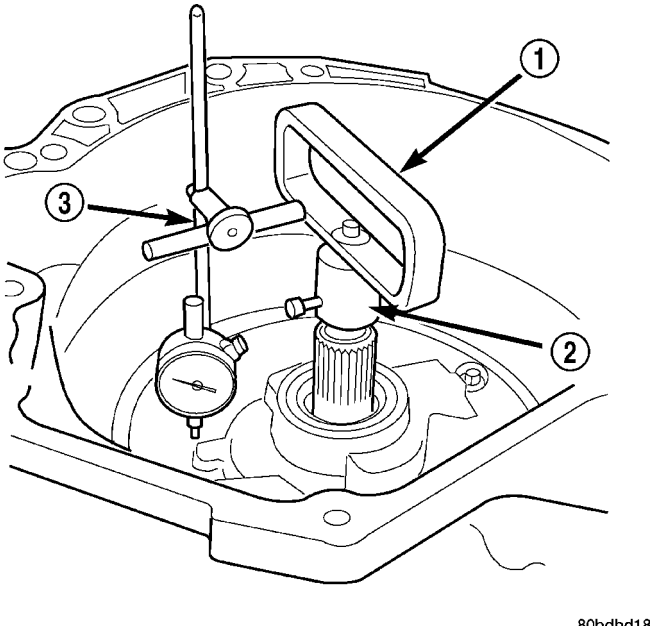

Fig. 138 Measure Input Shaft End Play Using End Play Set 8266

1 - TOOL 8266–8
2 - TOOL 8266–2
3 - TOOL C-3339

41TE AUTOMATIC TRANSAXLE (Continued)

NO. 4 THRUST PLATE CHART

PART NUMBER	THICKNESS
4431665AB	1.60mm (0.063 in.)
3836237AB	1.73mm (0.068 in.)
4431666AB	1.80mm (0.071 in.)
3836238AB	1.96mm (0.077 in.)
4431667AB	2.03mm (0.080 in.)
3836239AB	2.16mm (0.085 in.)
4431668AB	2.24mm (0.088 in.)
3836240AB	2.39mm (0.094 in.)
4431669AB	2.46mm (0.097 in.)
3836241AB	2.62mm (0.103 in.)
4446670AB	2.67mm (0.105 in.)
4446671AB	2.90mm (0.114 in.)

(53) Install input clutch assembly (Fig. 139).

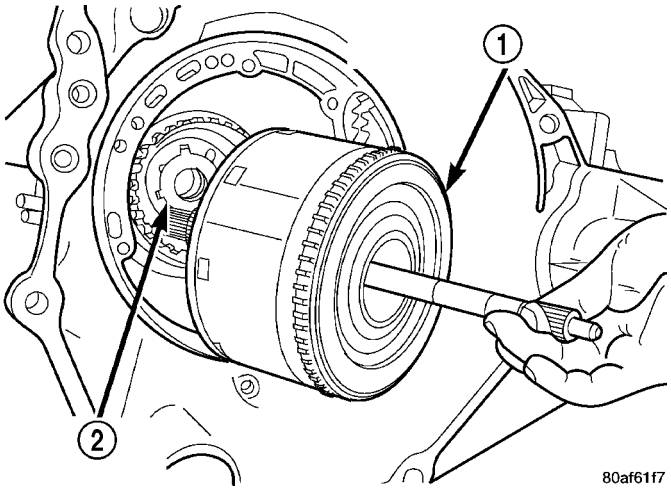

Fig. 139 Install Input Clutch Assembly

1 - INPUT CLUTCH ASSEMBLY
2 - #4 THRUST WASHER

(54) Install #1 caged needle bearing (Fig. 140).

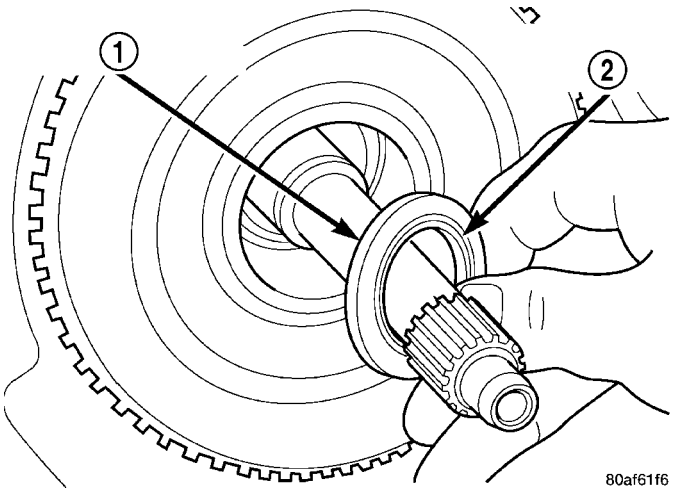

Fig. 140 Install Caged Needle Bearing

1 - #1 CAGED NEEDLE BEARING
2 - NOTE: TANGED SIDE OUT

CAUTION: The cooler bypass valve must be replaced if transaxle failure has occurred. Do not attempt to reuse or clean old valve.

(55) Install cooler bypass valve with o-ring end towards rear of case (Fig. 141).

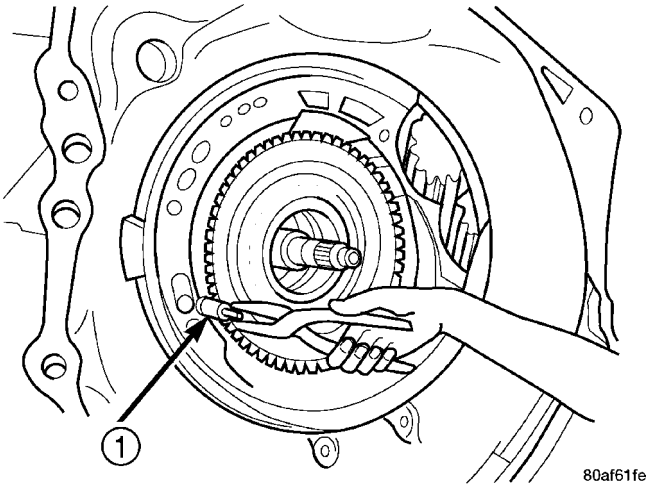

Fig. 141 Install Cooler Bypass Valve

1 - COOLER BYPASS VALVE

41TE AUTOMATIC TRANSAXLE (Continued)

(56) Install oil pump gasket (Fig. 142).

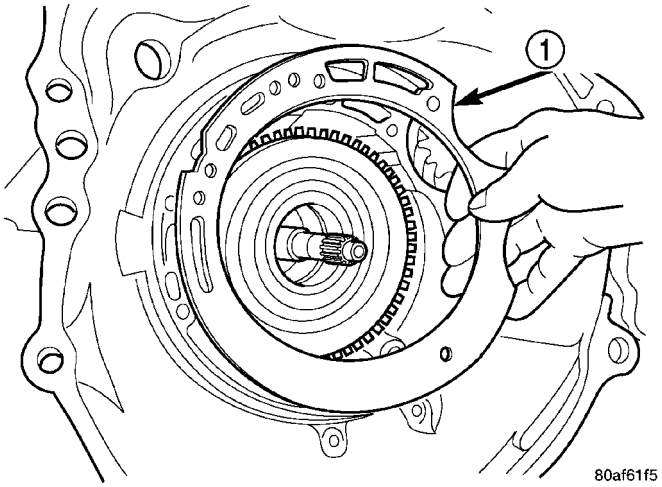

Fig. 142 Install Oil Pump Gasket

1 - PUMP GASKET

(57) Install oil pump assembly (Fig. 143).

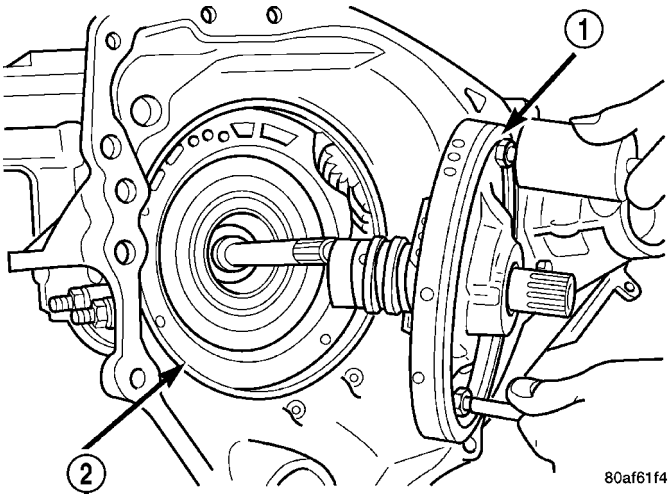

Fig. 143 Install Oil Pump

1 - OIL PUMP
2 - GASKET

(58) Install oil pump-to-case bolts and torque to 27 N·m (20 ft. lbs.) (Fig. 144).

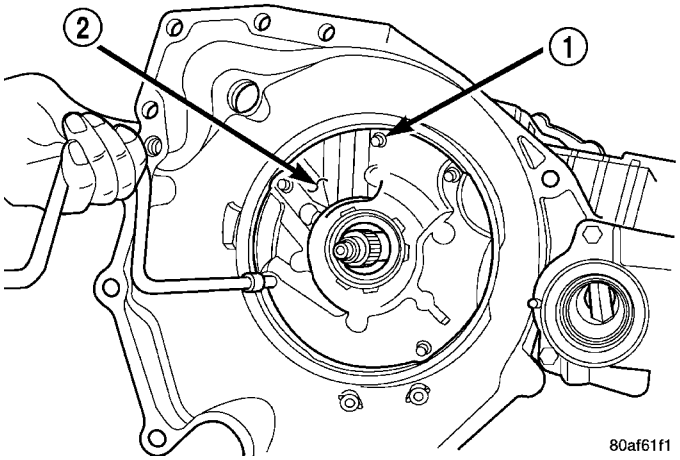

Fig. 144 Install Pump-to-Case Bolts

1 - PUMP ATTACHING BOLTS
2 - PUMP HOUSING

(59) Install low/reverse accumulator (Fig. 145).

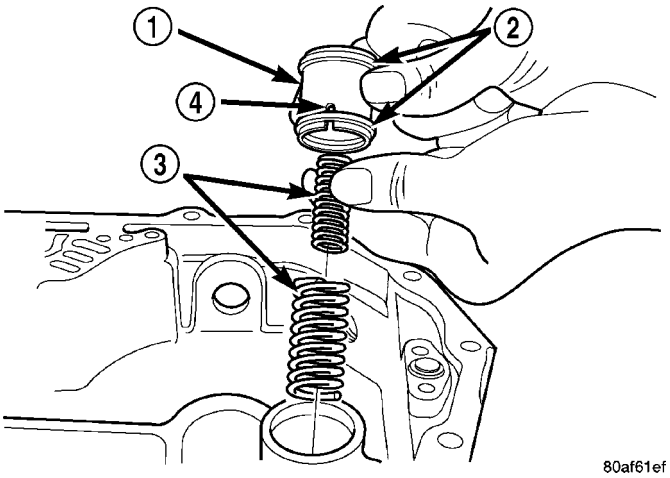

Fig. 145 Install Low/Reverse Accumulator

1 - ACCUMULATOR PISTON
2 - SEAL RINGS
3 - RETURN SPRINGS
4 - (NOTE NOTCH)

41TE AUTOMATIC TRANSAXLE (Continued)

(60) Install low/reverse accumulator plug (Fig. 146).

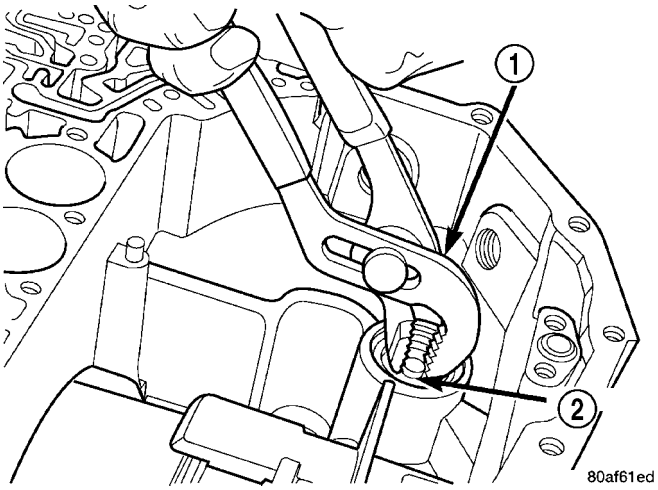

Fig. 146 Install Low/Reverse Accumulator Plug (Cover)

1 - ADJUSTABLE PLIERS
2 - PLUG

(61) Install low/reverse accumulator snap ring (Fig. 147).

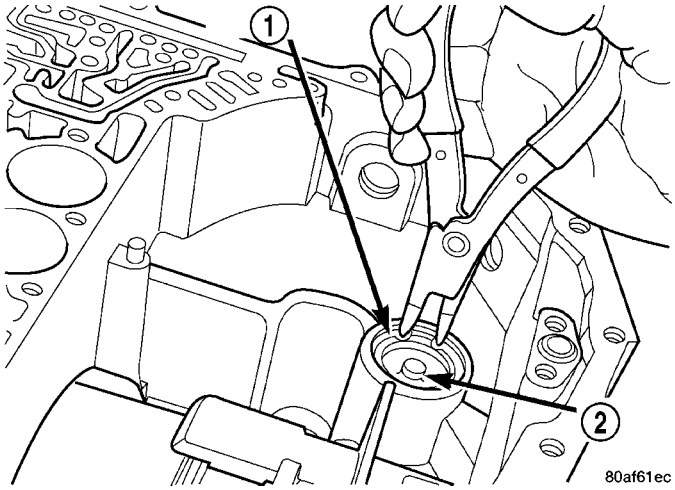

Fig. 147 Install Low/Reverse Accumulator Snap Ring

1 - SNAP RING
2 - PLUG

NOTE: Depending on engine application, some accumulators will have two springs, and others will have one spring. The springs are color-coded for application and year.

(62) Install underdrive and overdrive accumulators (Fig. 148) (Fig. 149) (Fig. 150).

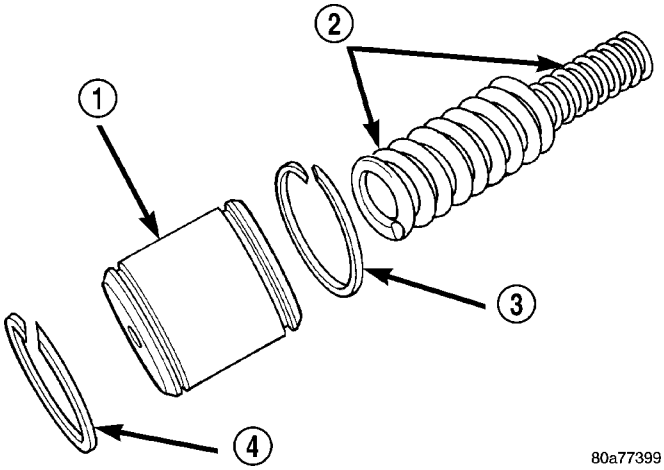

Fig. 148 Accumulator (Underdrive)

1 - ACCUMULATOR PISTON (UNDERDRIVE)
2 - RETURN SPRINGS
3 - SEAL RING
4 - SEAL RING

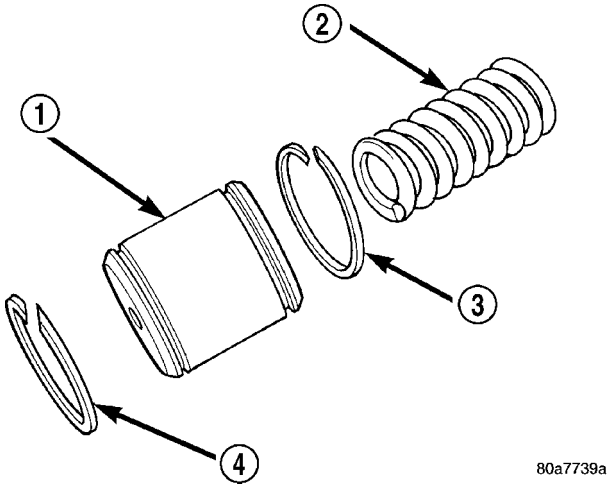

Fig. 149 Accumulator (Overdrive)

1 - ACCUMULATOR PISTON (OVERDRIVE)
2 - RETURN SPRING
3 - SEAL RING
4 - SEAL RING

41TE AUTOMATIC TRANSAXLE (Continued)

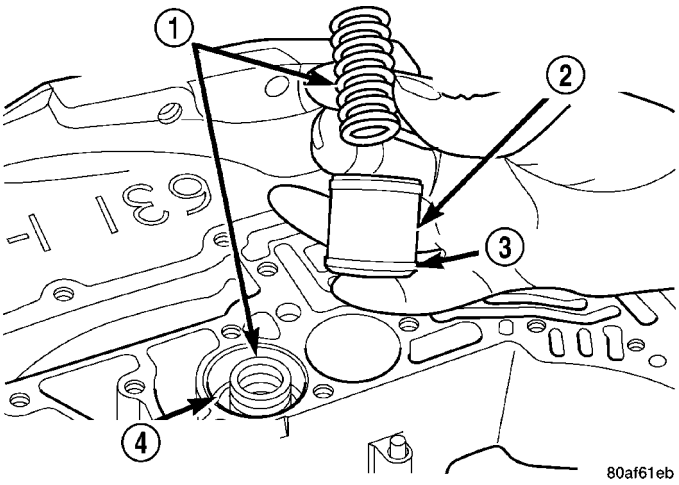

Fig. 150 Install Underdrive and Overdrive Accumulators

1 - RETURN SPRING
2 - UNDERDRIVE CLUTCH ACCUMULATOR
3 - SEAL RING (2)
4 - OVERDRIVE CLUTCH ACCUMULATOR

(63) Install valve body to transaxle (Fig. 151). Rotate manual valve shaft fully clockwise to ease installation. Make sure park rod rollers are positioned within park guide bracket.

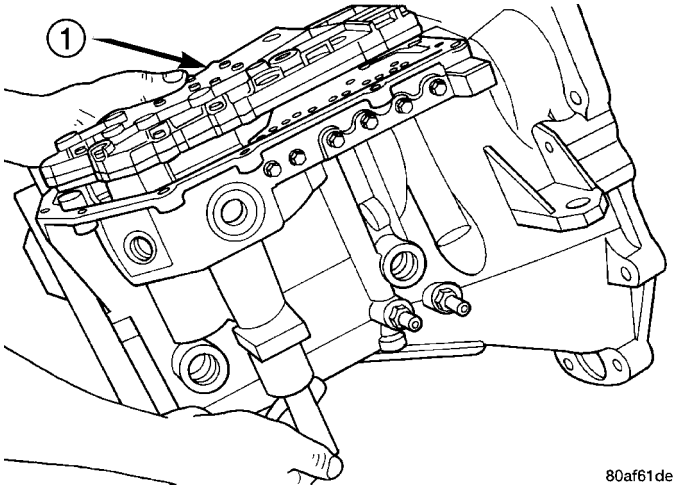

Fig. 151 Install Valve Body

1 - VALVE BODY

(64) Install and torque valve body-to-case bolts to 12 N·m (105 in. lbs.) (Fig. 152).

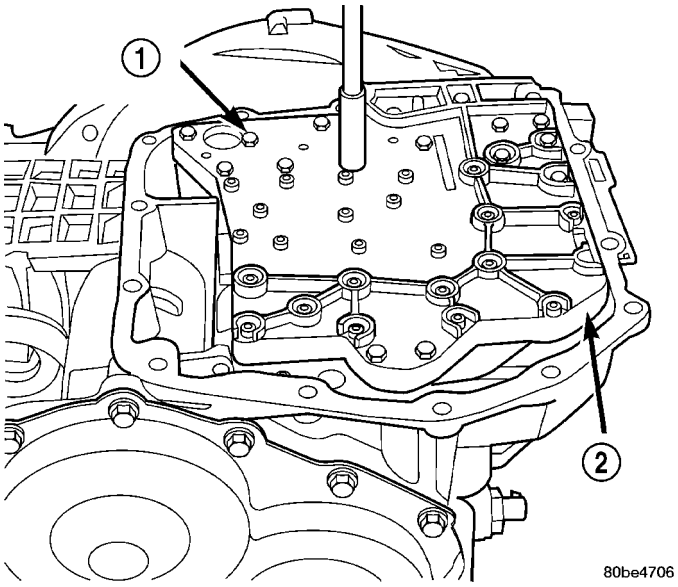

Fig. 152 Install Valve Body-to-Case Bolts

1 - VALVE BODY ATTACHING BOLTS (18)
2 - VALVE BODY

(65) Install oil filter and new o-ring (Fig. 153).

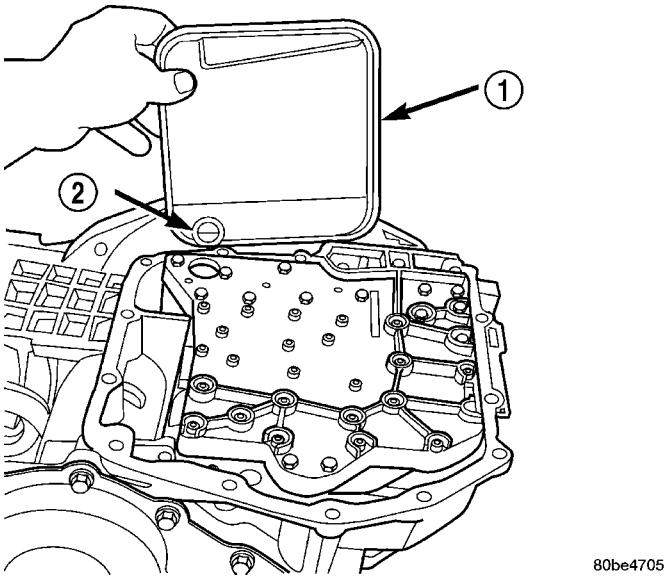

Fig. 153 Install Oil Filter

1 - OIL FILTER
2 - O-RING

41TE AUTOMATIC TRANSAXLE (Continued)

(66) Apply an 1/8” bead of Mopar® ATF RTV (MS-GF41) to oil pan and immediately install to case (Fig. 154).

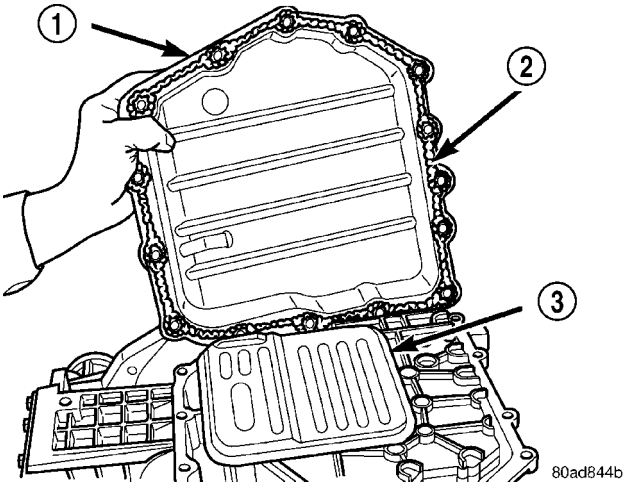

Fig. 154 Install Oil Pan

1 - OIL PAN
2 - 1/8 INCH BEAD OF MOPAR® ATF RTV (MS-GF41)
3 - OIL FILTER

(67) Install oil pan-to-case bolts and torque to 19 N·m (165 in. lbs.).

(68) Install solenoid/pressure switch assembly and gasket to case (Fig. 155).

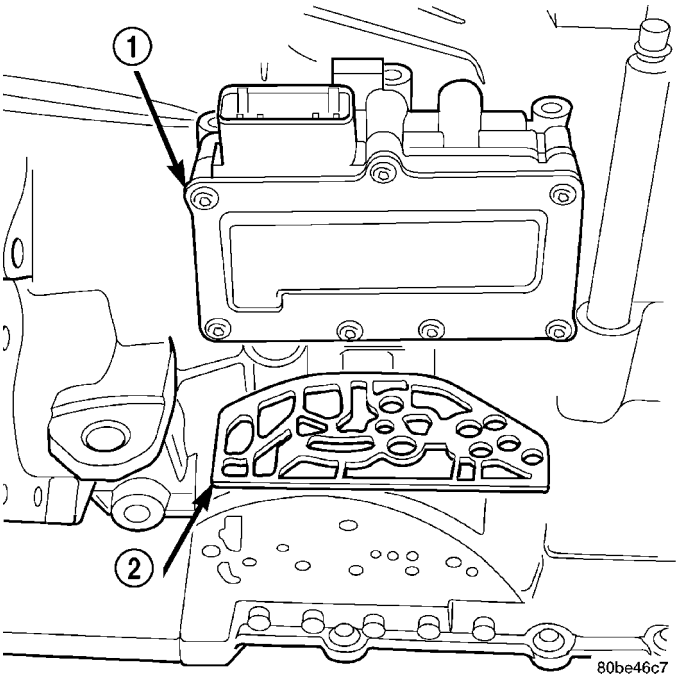

Fig. 155 Solenoid/Pressure Switch Assembly and Gasket

1 - SOLENOID/PRESSURE SWITCH ASSEMBLY
2 - GASKET

(69) Install and tighten solenoid/pressure switch assembly-to-transaxle case bolts to 12 N·m (110 in. lbs.) (Fig. 156).

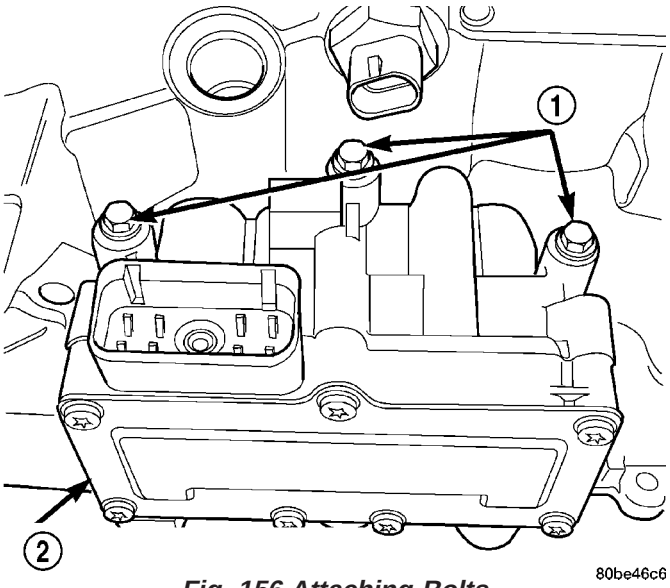

Fig. 156 Attaching Bolts

1 - BOLTS
2 - SOLENOID AND PRESSURE SWITCH ASSEMBLY

(70) Install and torque input and output speed sensors to case to 27 N·m (20 ft. lbs.).

INSTALLATION

(1) Install transaxle to engine. Install and torque transaxle-to-engine bolts to 95 N·m (70 ft. lbs.).

(2) Install upper mount to transaxle.

(3) Raise engine/transaxle assembly into position and install thru bolt. Torque thru bolt to 70 N·m (55 ft. lbs.).

(4) Remove transmission jack and screw jack.

(5) Install torque converter bolts.

(6) Install torque converter dust shield.

(7) Install starter motor assembly and lower bolt.

(8) Install front mount/bracket assembly.

(9) Install rear mount/bracket assembly.

(10) Install halfshafts. (Refer to 3 - DIFFERENTIAL & DRIVELINE/HALF SHAFT - INSTALLATION)

(11) Lower vehicle.

(12) Install starter upper bracket-to-block bolt.

(13) Connect oxygen sensor harness connector.

(14) Install throttle body support bracket (if equipped).

(15) Connect crankshaft position sensor connector (if equipped).

(16) Connect gearshift cable to manual valve lever.

(17) Connect output speed sensor connector.

(18) Connect input speed sensor connector.

(19) Connect transmission range sensor connector.

(20) Connect solenoid/pressure switch assembly connector.

(21) Connect transaxle oil cooler lines using service splice kit. Refer to instructions provided with kit.

(22) Install dipstick tube.

(23) Install air cleaner assembly.

(24) Connect battery negative cable.

41TE AUTOMATIC TRANSAXLE (Continued)

SCHEMATICS AND DIAGRAMS

41TE TRANSAXLE HYDRAULIC SCHEMATICS

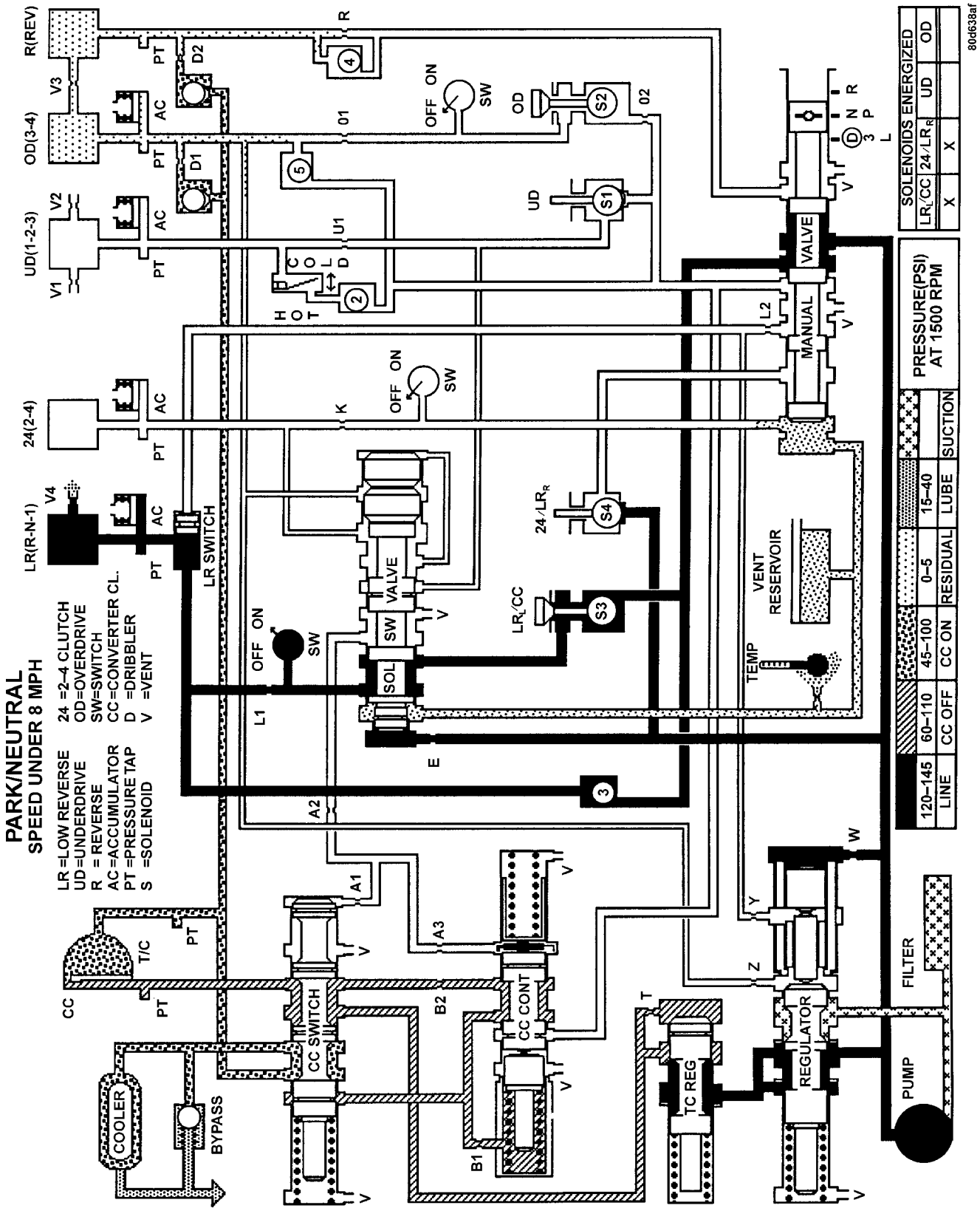

Park/Neutral (Speed Under 8 MPH)

41TE AUTOMATIC TRANSAXLE (Continued)

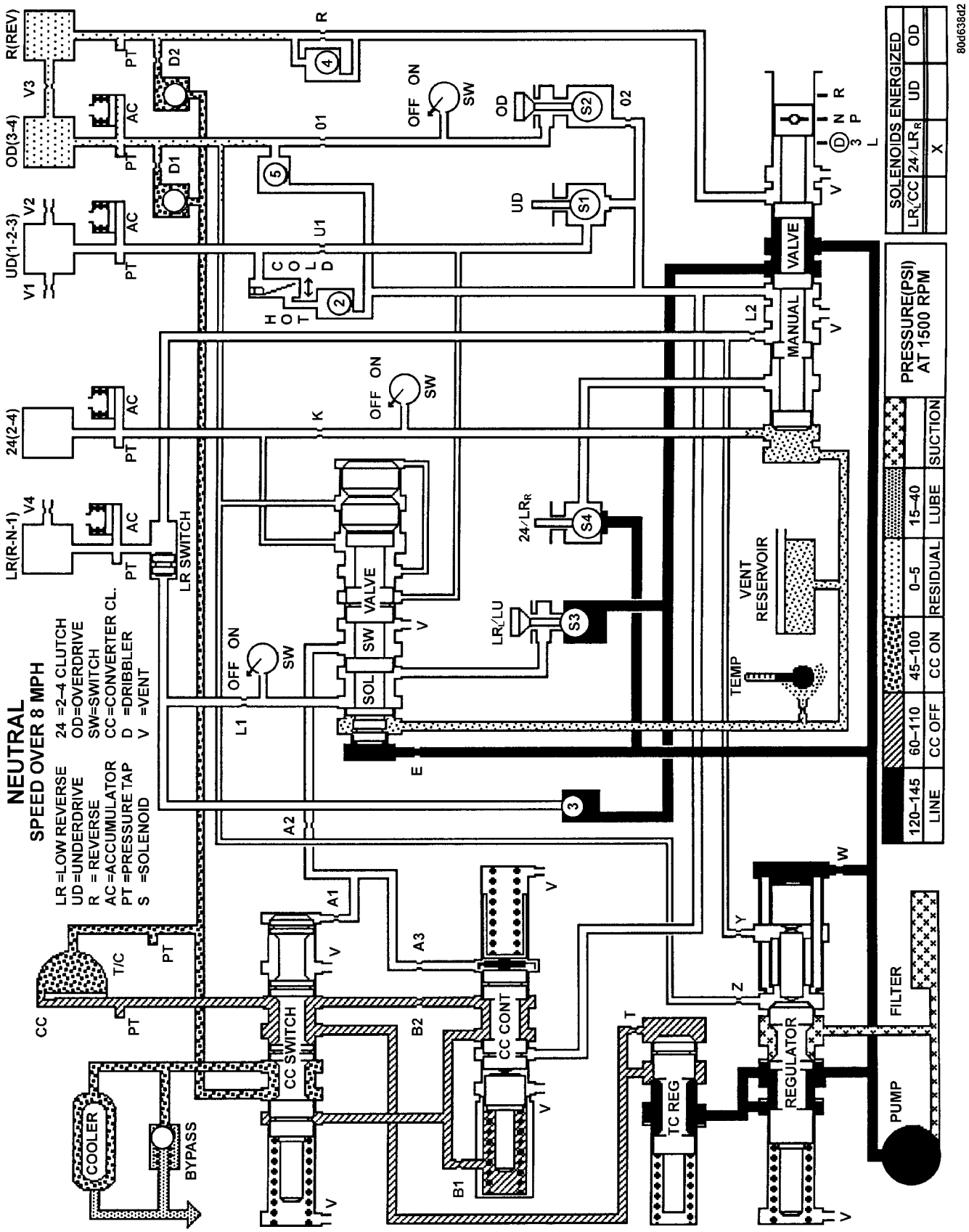

Neutral (Speed Over 8 MPH)

41TE AUTOMATIC TRANSAXLE (Continued)

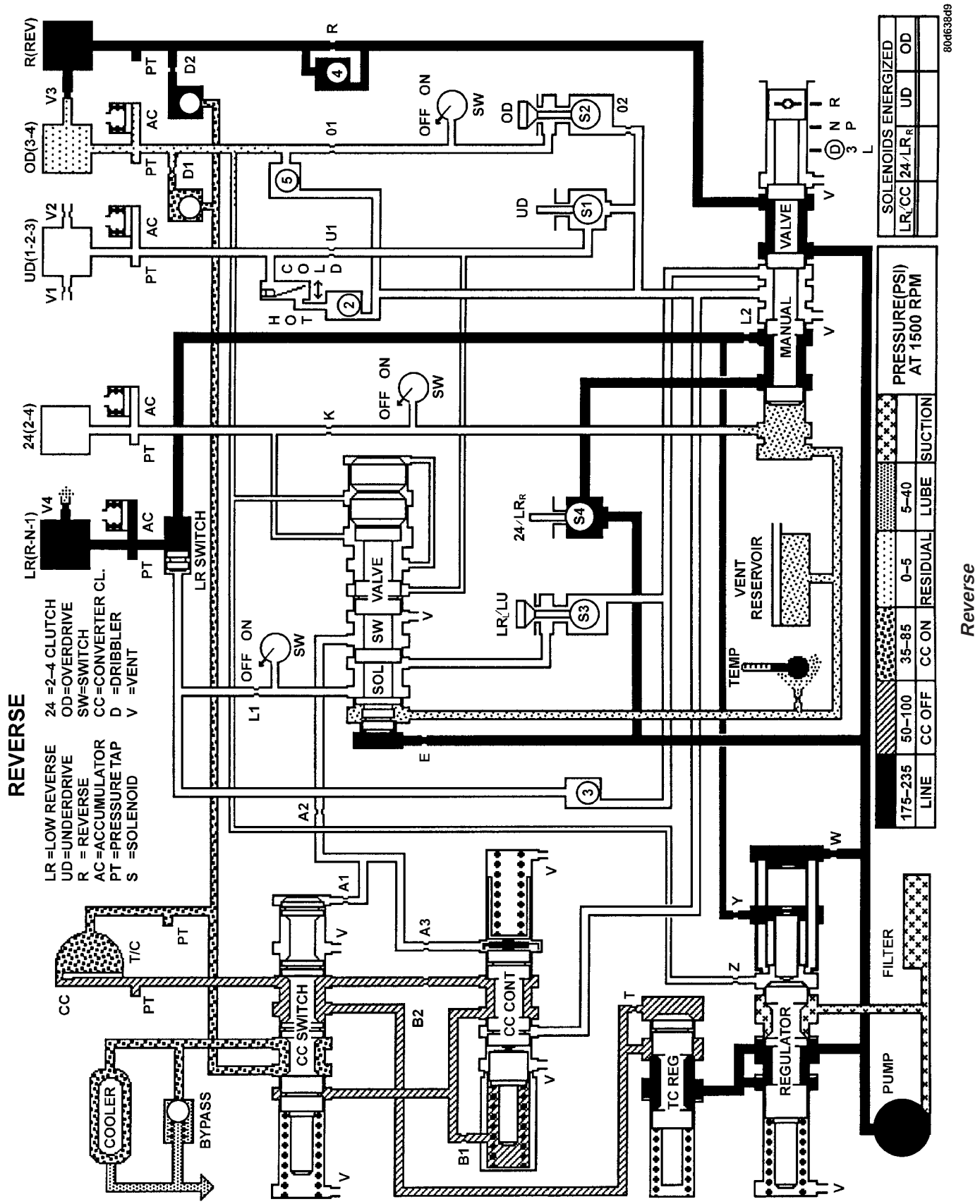

41TE AUTOMATIC TRANSAXLE (Continued)

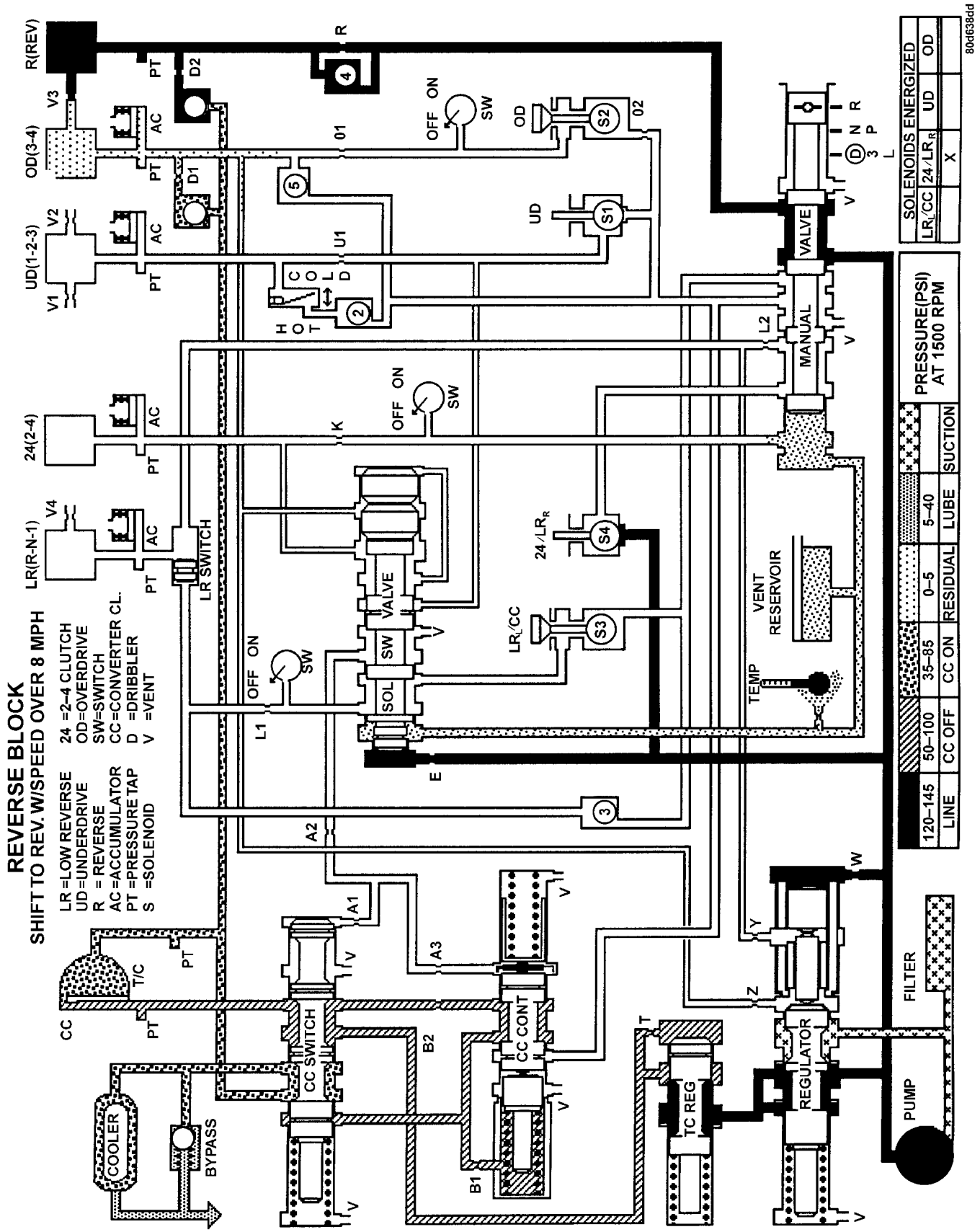

Reverse Block (Shift to Reverse W/Speed Over 8 mph)

41TE AUTOMATIC TRANSAXLE (Continued)

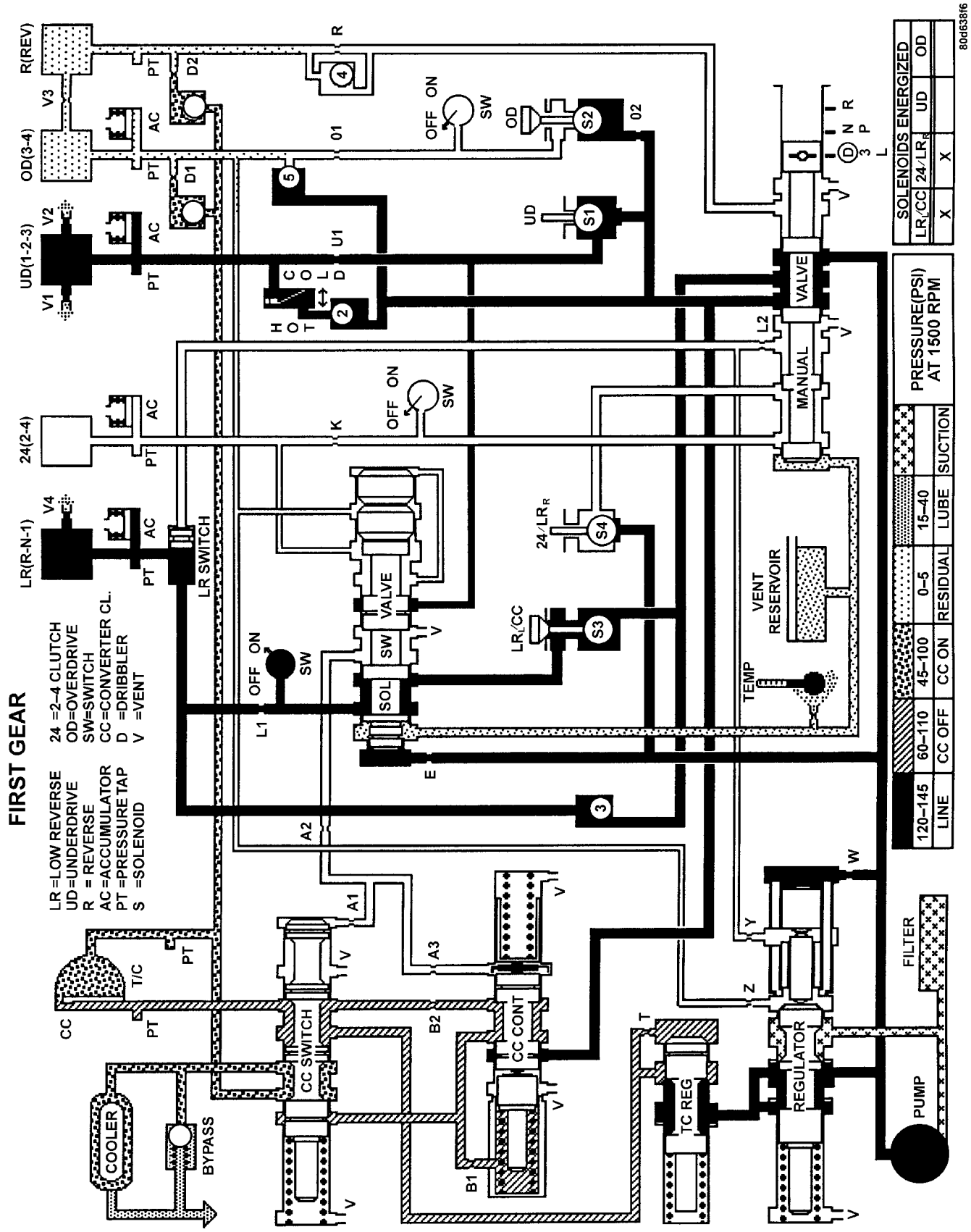

First Gear

41TE AUTOMATIC TRANSAXLE (Continued)

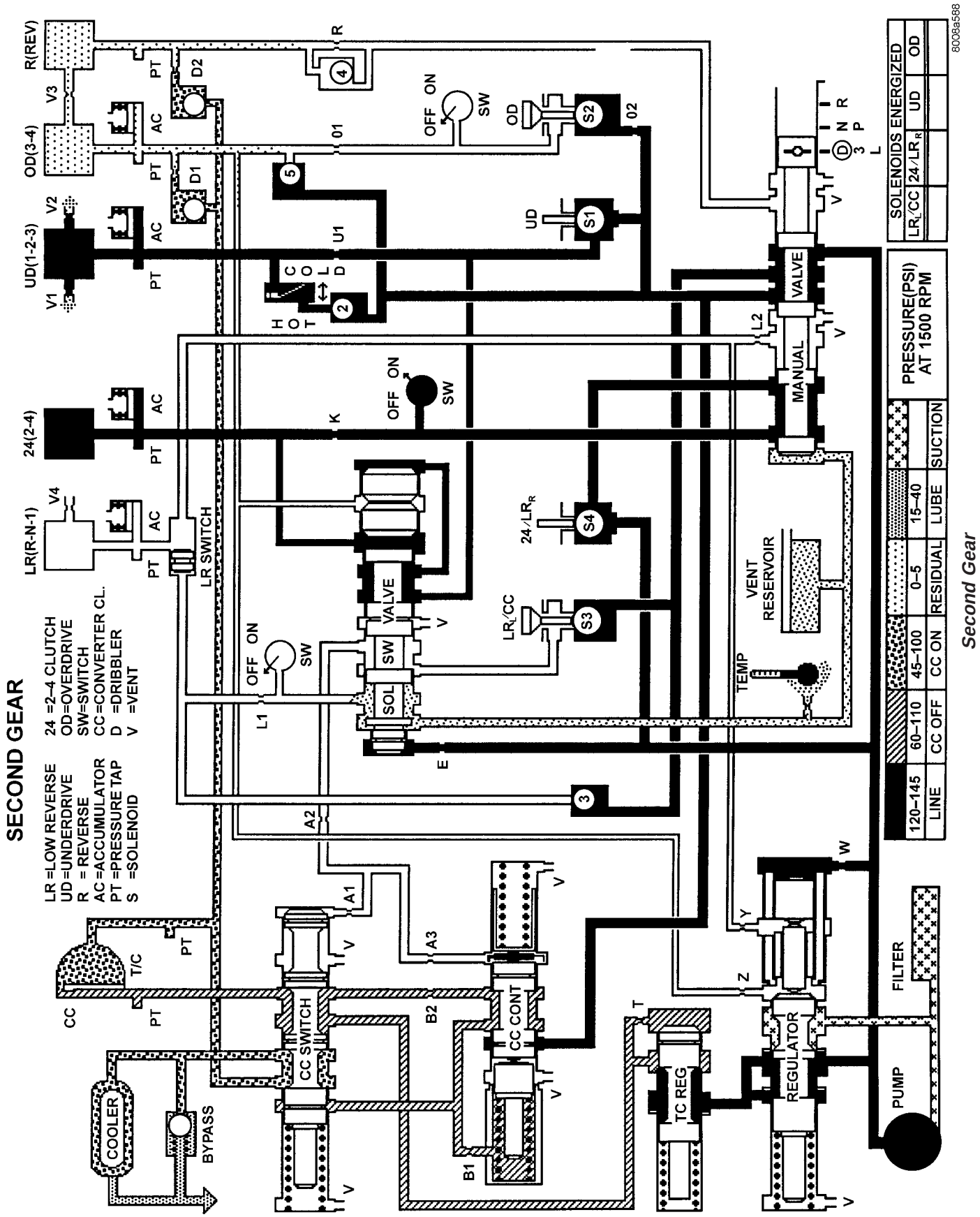

41TE AUTOMATIC TRANSAXLE (Continued)

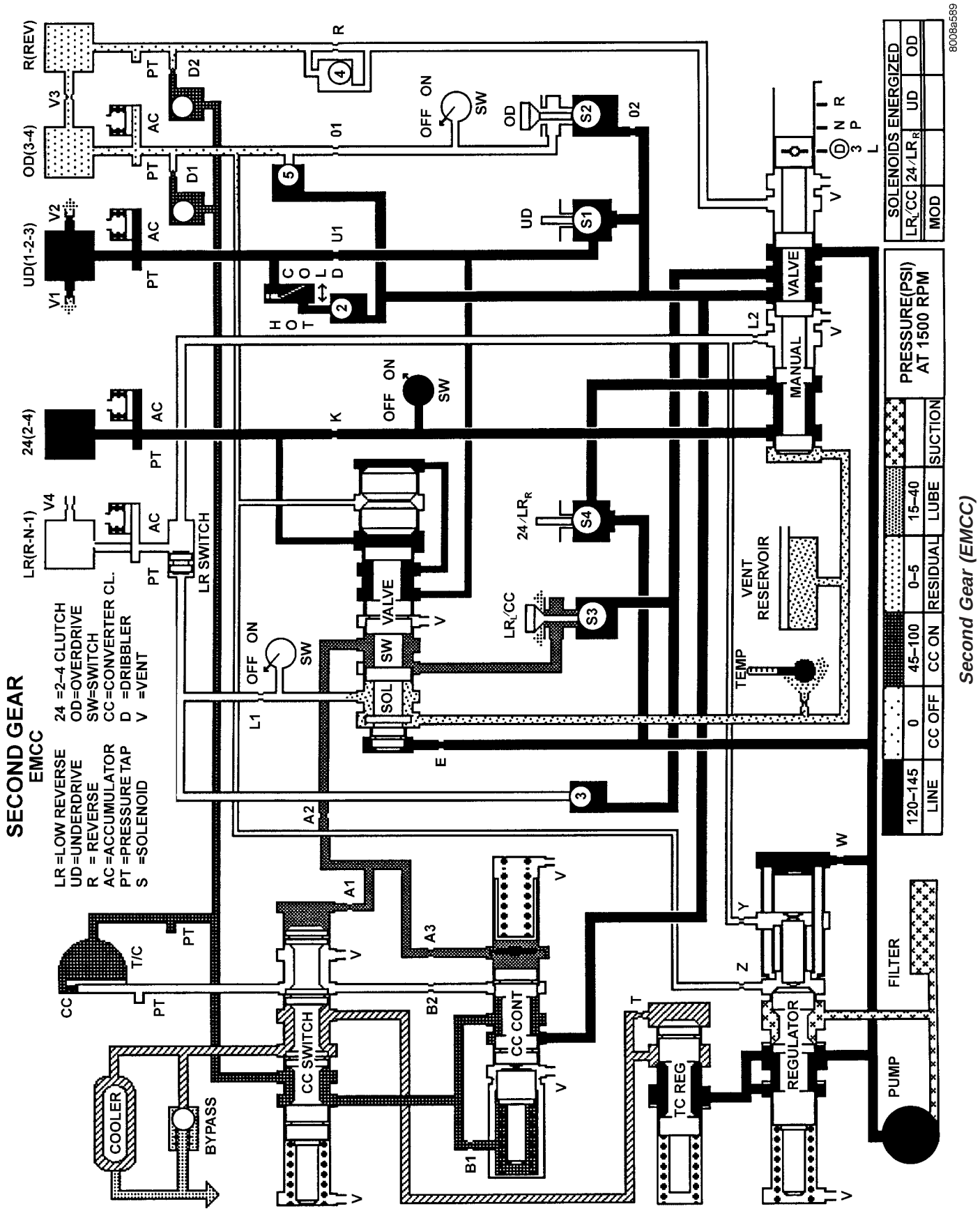

Second Gear (EMCC)

41TE AUTOMATIC TRANSAXLE (Continued)

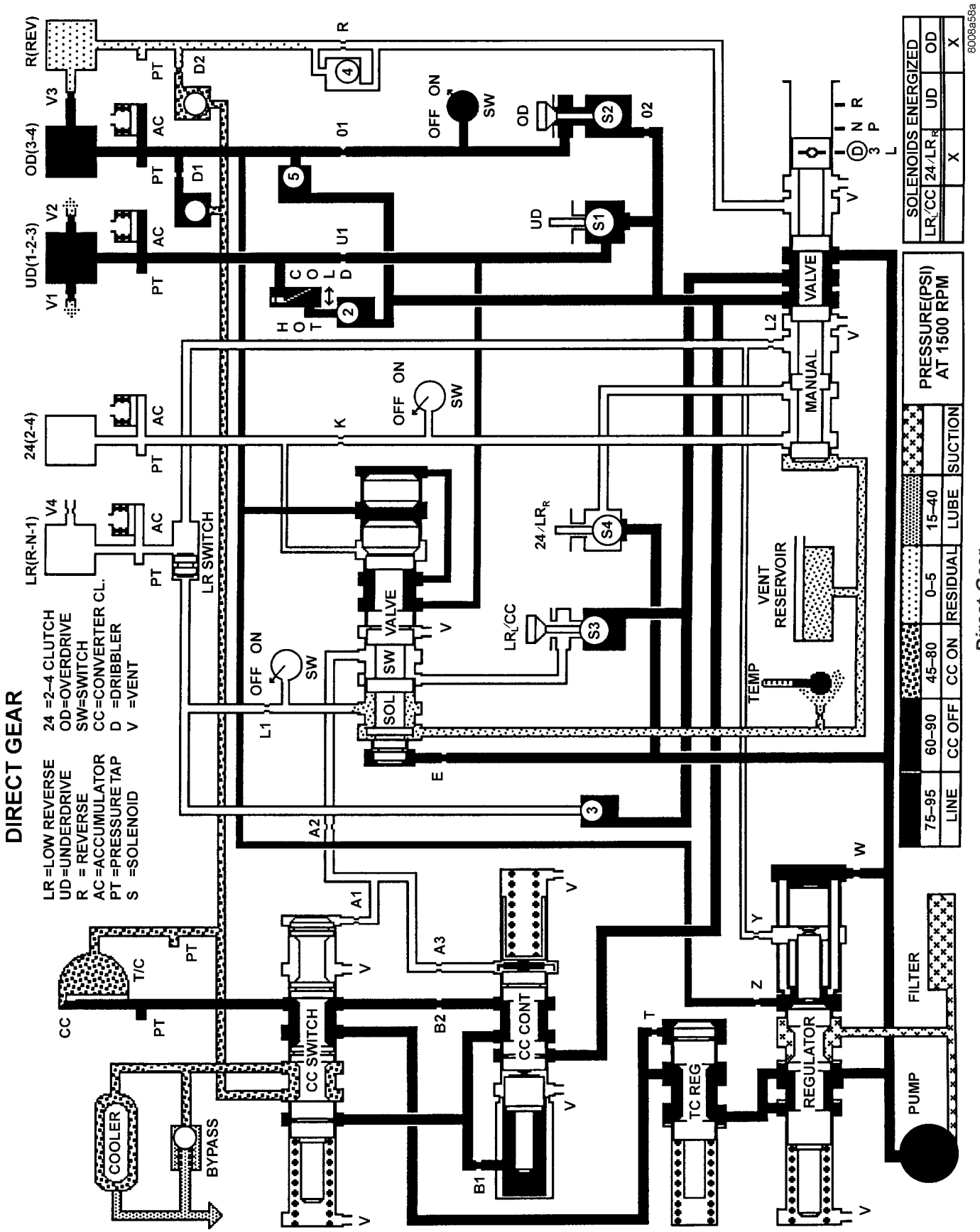

41TE AUTOMATIC TRANSAXLE (Continued)

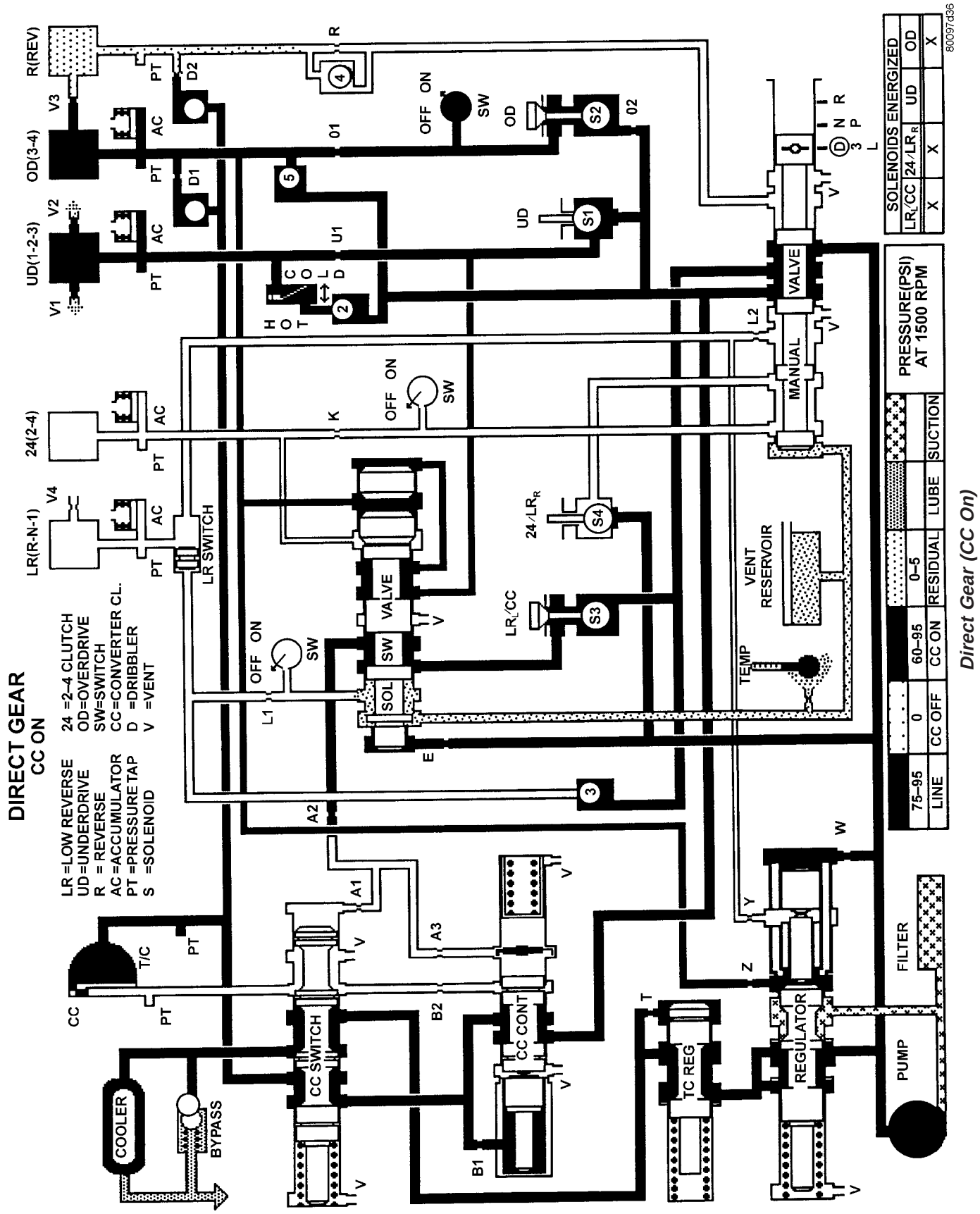

41TE AUTOMATIC TRANSAXLE (Continued)

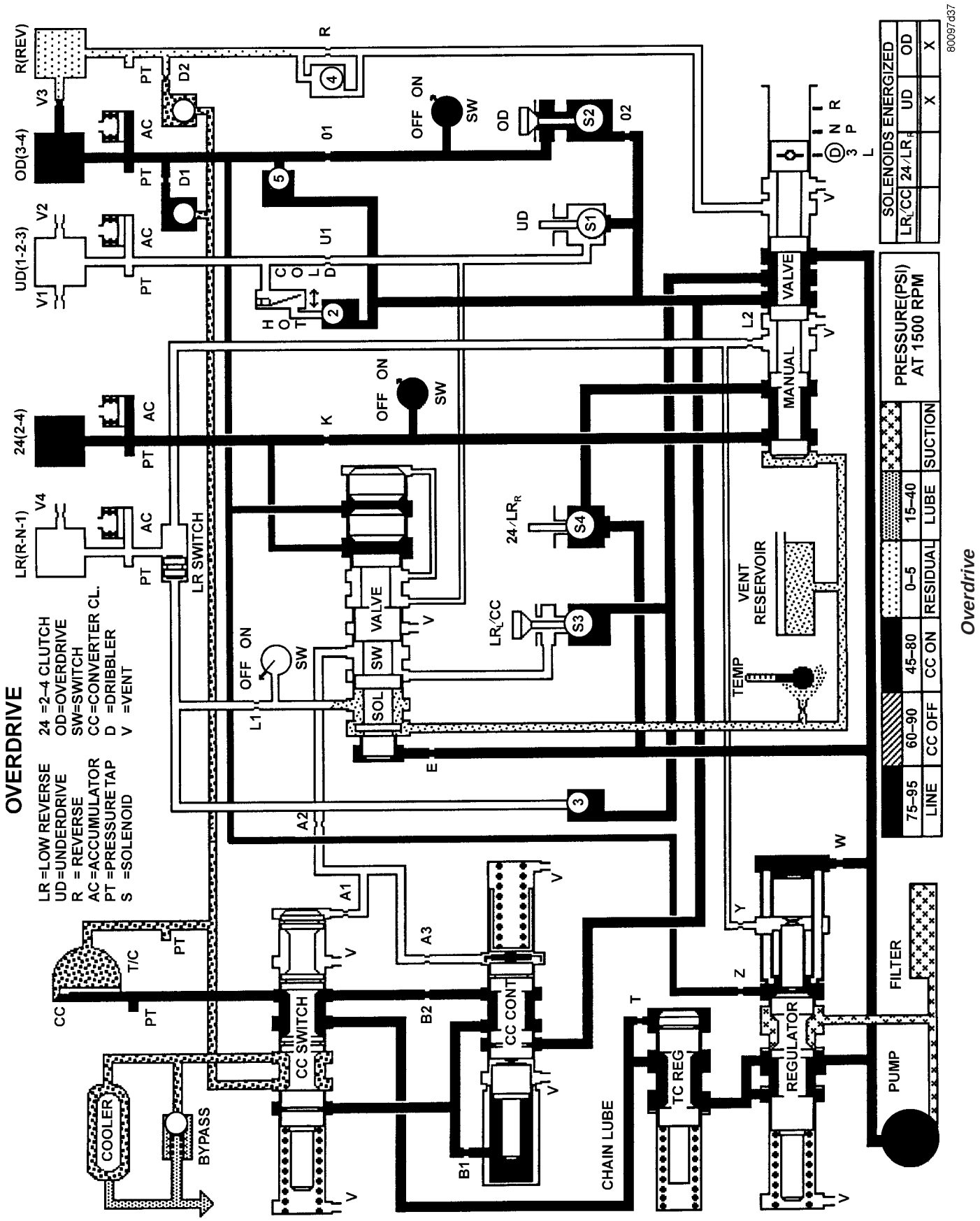

41TE AUTOMATIC TRANSAXLE (Continued)

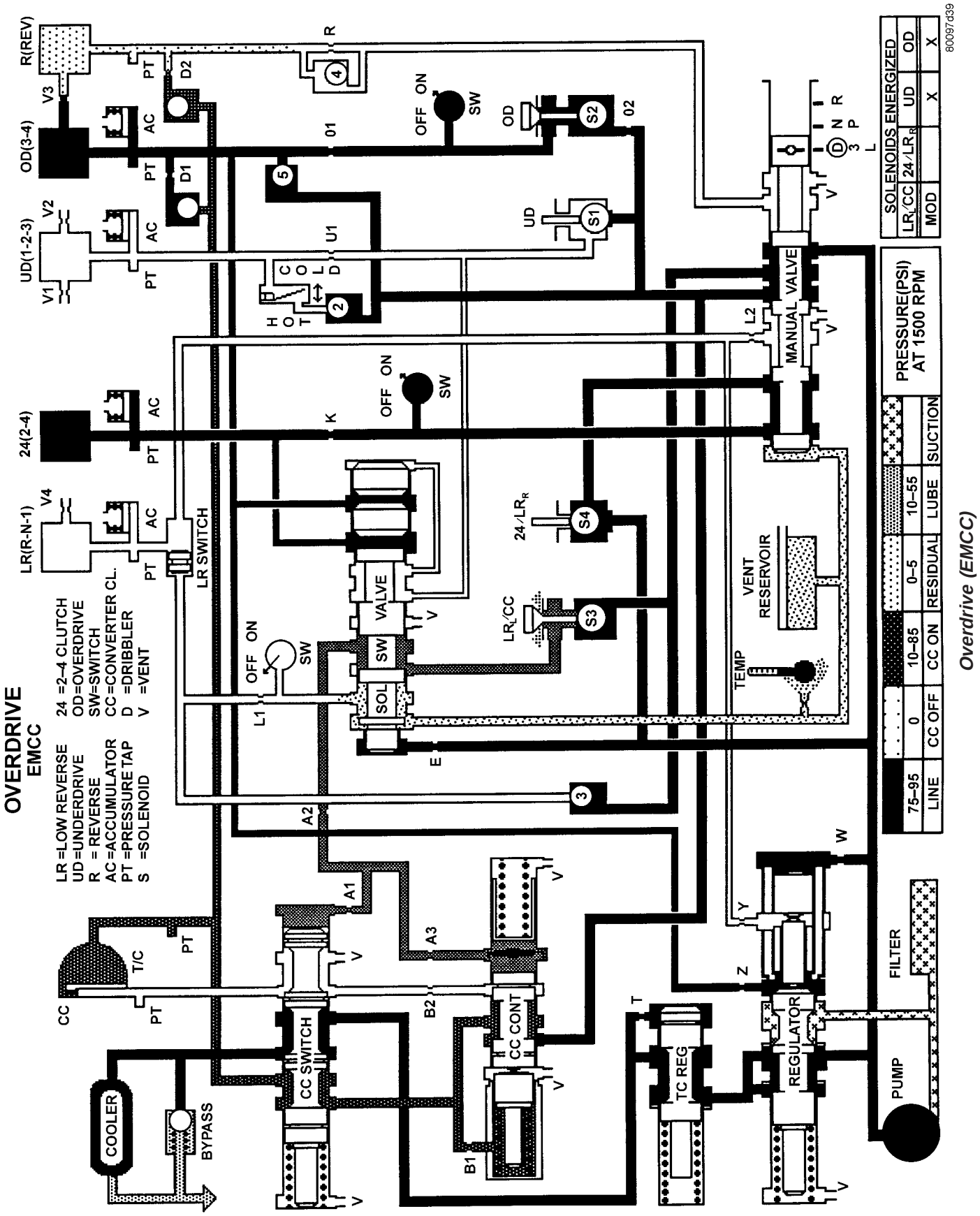

Overdrive (EMCC)

41TE AUTOMATIC TRANSAXLE (Continued)

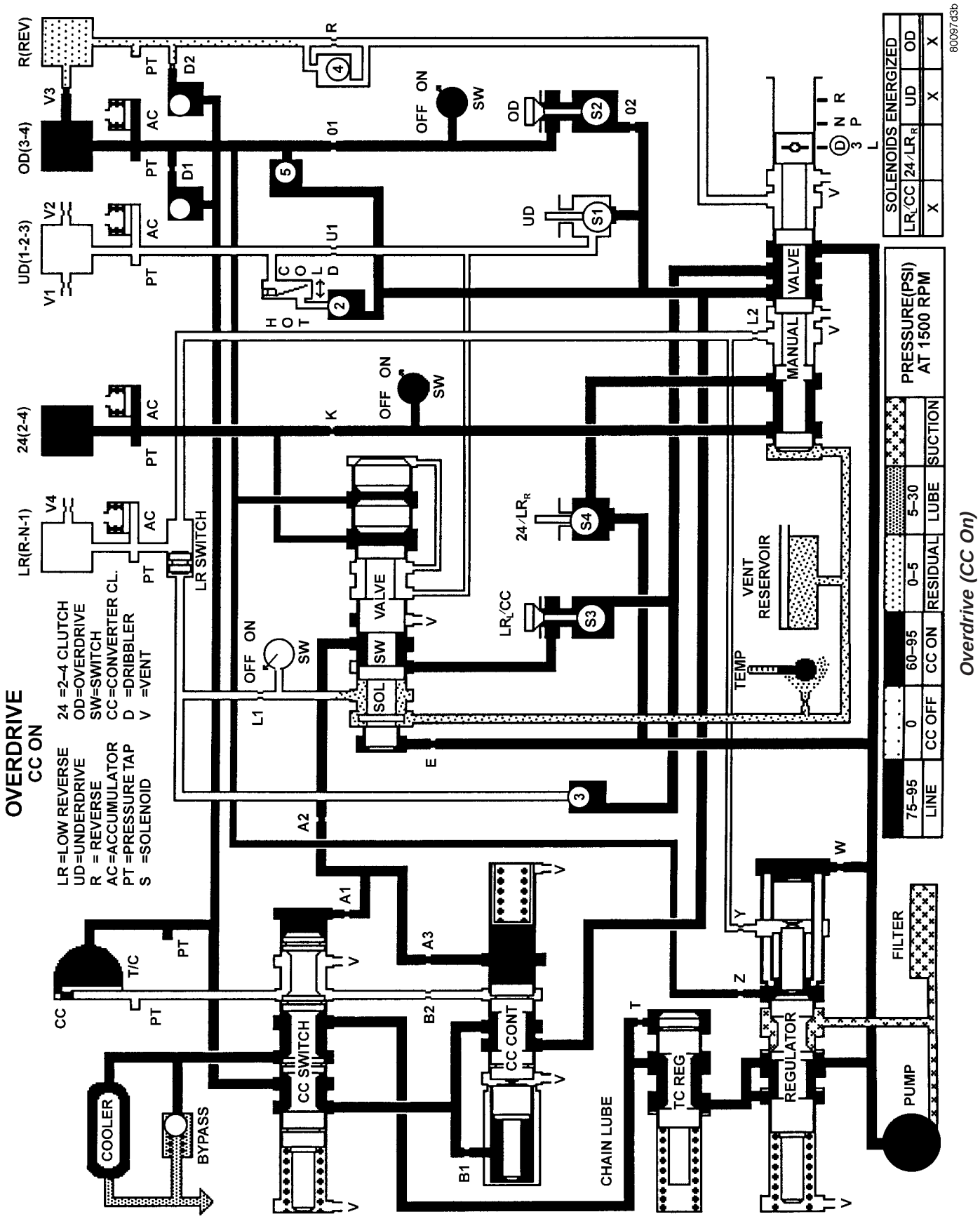

Overdrive (CC On)

41TE AUTOMATIC TRANSAXLE (Continued)

SPECIFICATIONS - 41TE TRANSAXLE

GENERAL SPECIFICATIONS

DESCRIPTION	SPECIFICATION
Transaxle Type	Fully adaptive, electronically controlled, four speed automatic with torque converter and integral differential
Cooling Method	Air-to-oil heat exchanger
Lubrication	Pump (internal-external gear-type

GEAR RATIOS

DESCRIPTION	SPECIFICATION
First Gear	2.84
Second Gear	1.57
Direct Gear	1.00
Overdrive Gear	0.69
Reverse Gear	2.21

BEARING SETTINGS (END PLAY & TURNING TORQUE)

DESCRIPTION	METRIC	STANDARD
Differential Assembly	0.6-2 N·m	5-18 in. lbs.
Output Hub	0.3-2 N·m	3-8 in. lbs.
Transfer Shaft (End Play)	0.051-0.102 mm	0.002-0.004 in.
Overall Drag At Output Hub	0.3-1.9 N·m	3-16 in. lbs.

CLUTCH CLEARANCES

DESCRIPTION	METRIC	STANDARD
Low/Rev Clutch (Select Reaction Plate)	0.89-1.47 mm	0.035-0.058 in.
Two/Four Clutch (No Selection)	0.76-2.64 mm	0.030-0.104 in.
Reverse Clutch (Select Snap Ring)	0.89-1.37 mm	0.035-0.054 in.
Overdrive Clutch (No Selection)	1.07-3.25 mm	0.042-0.128 in.
Underdrive Clutch (Select Pressure Plate)	0.94-1.50 mm	0.037-0.059 in.

OIL PUMP CLEARANCES

DESCRIPTION	METRIC	STANDARD
Outer Gear-to-Crescent	0.060-0.298 mm	0.0023-0.0117 in.
Inner Gear-to-Crescent	0.093-0.385 mm	0.0036-0.0151 in.
Outer Gear-to-Pocket	0.089-0.202 mm	0.0035-0.0079 in.
Outer Gear Side Clearance	0.020-0.046 mm	0.0008-0.0018 in.
Inner Gear Side Clearance	0.020-0.046 mm	0.0008-0.0018 in.

41TE AUTOMATIC TRANSAXLE (Continued)

INPUT SHAFT

DESCRIPTION	METRIC	SPECIFICATION
End Play	0.127-0.635mm	0.005-0.025 in.

TORQUE SPECIFICATIONS

DESCRIPTION	N·m	Ft. Lbs.	In. Lbs.
Bolt, Differential Cover-to-Case	19	—	165
Bolt, Differential Ring Gear-to-Case	95	70	—
Bolt, Differential Bearing Retainer-to-Case	28	21	—
Bolt, Driveplate-to-Crankshaft	95	70	—
Bolt, Extension Housing/ Plate-to-Case	28	21	—
Bolt, Oil Pan-to-Case	19	—	165
Bolt, Output Gear	271	200	—
Bolt, Output Gear Stirrup/Strap	23	17	—
Bolt, Oil Pump-to-Case	27	20	—
Bolt, Reaction Support-to-Case	27	20	—
Bolt, Solenoid/Pressure Switch Assy.-to-Case	12	—	110
Bolt, Torque Converter-to-Driveplate	75	55	—
Bolt, Transfer Gear Cover	20	—	175
Bolt, Valve Body-to-Case	12	—	105
Fitting, Oil Cooler Line	12	—	105
Nut, Tranfer Gear	271	200	—
Tap, Transaxle Pressure	5	—	45
Screw, L/R Clutch Retainer	5	—	45
Screw, Solenoid/Pressure Switch Assy. Connector	4	—	35
Screw, Valve Body-to-Transfer Plate	5	—	45
Sensor, Input Speed	27	20	—
Sensor, Output Speed	27	20	—
Sensor, Transmission Range Sensor	5	—	45

41TE AUTOMATIC TRANSAXLE (Continued)

SPECIAL TOOLS

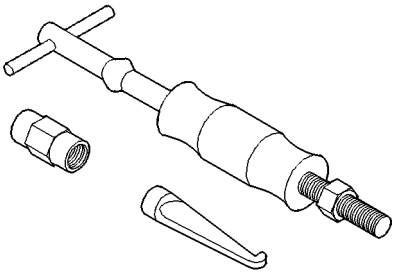

Puller C-637

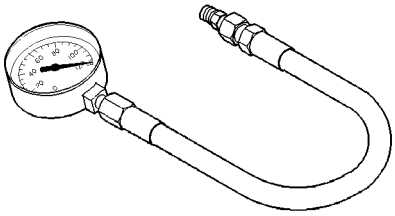

Pressure Gauge (High) C-3293SP

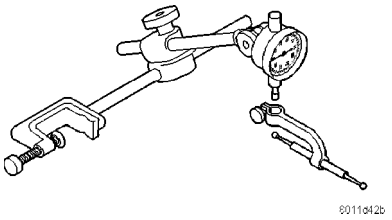

Dial Indicator C-3339

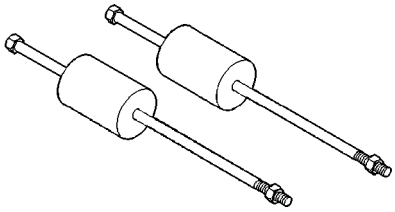

Oil Pump Puller C-3752

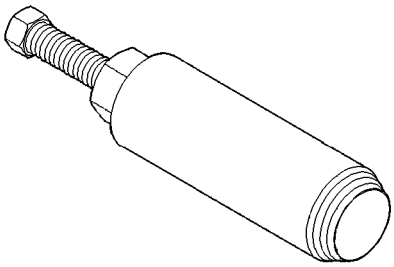

Seal Puller C-3981B

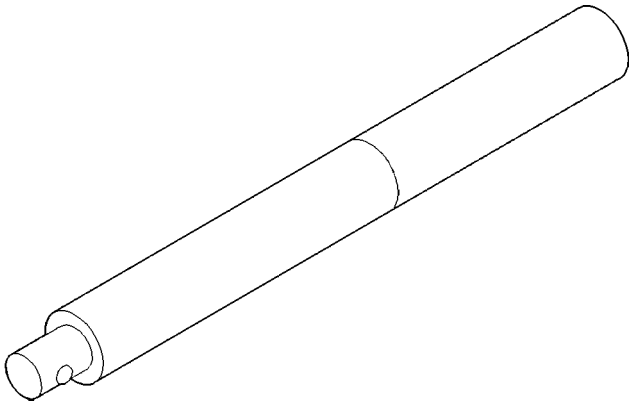

Universal Handle C-4171

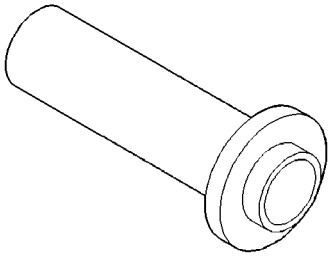

Seal Installer C-4193A

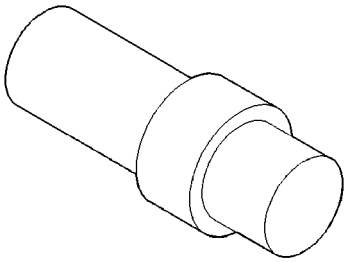

Adapter C-4996

41TE AUTOMATIC TRANSAXLE (Continued)

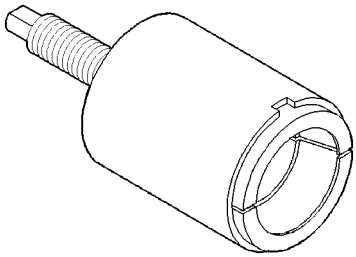

Remover Kit L-4406

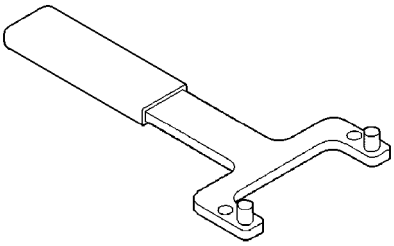

Bearing Puller L-4435

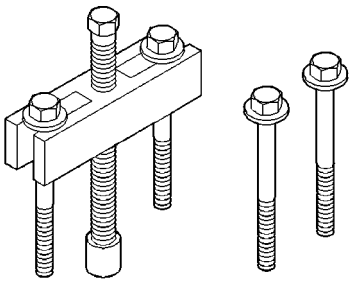

Gear Puller L-4407A

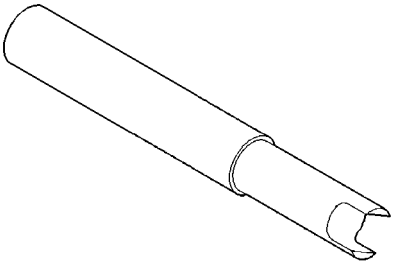

Differential Tool L-4436A

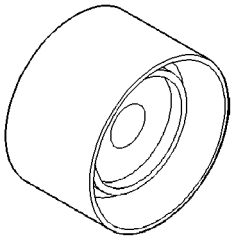

Bearing Installer L-4410

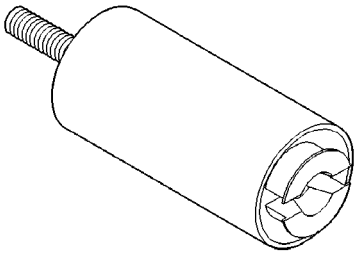

Special Jaw Set L-4518

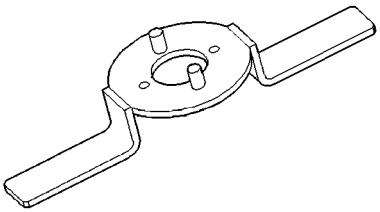

Gear Checking Plate L-4432

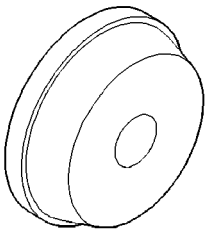

Installer L-4520

41TE AUTOMATIC TRANSAXLE (Continued)

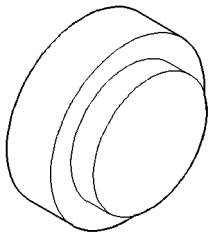

Thrust Button L-4539-2

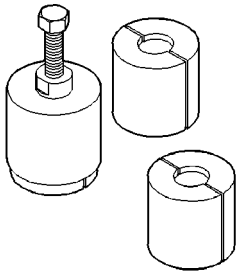

Puller Set 5048

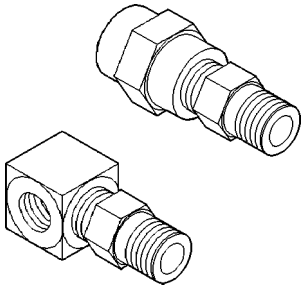

Adapter L-4559

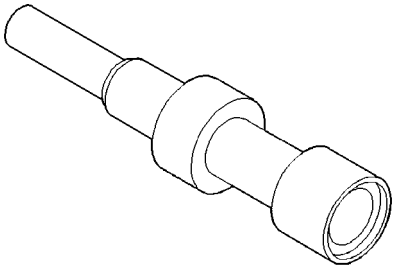

Remover/Installer 5049-A

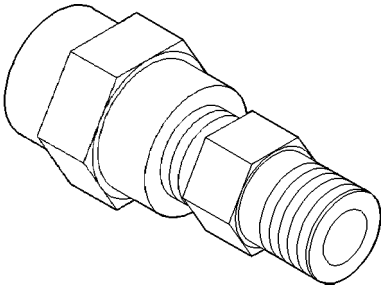

Adapter L-4559-2

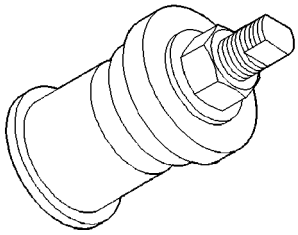

Installer 5050A

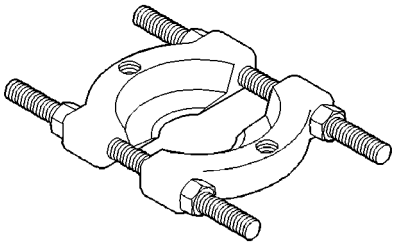

Bearing Splitter P-334

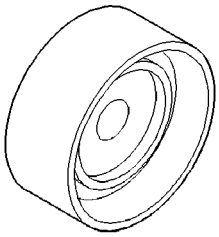

Installer 5052

41TE AUTOMATIC TRANSAXLE (Continued)

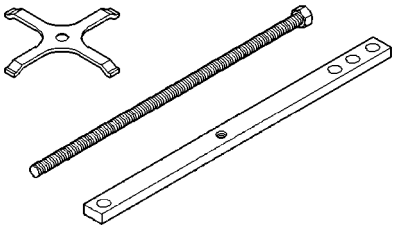

Compressor 5058A

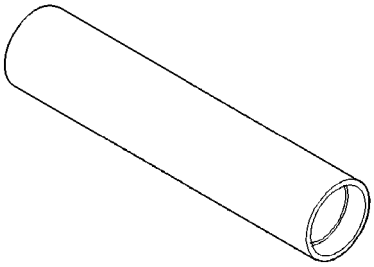

Installer 6052

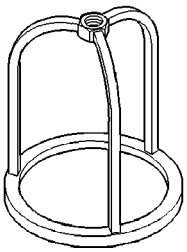

Compressor 5059-A

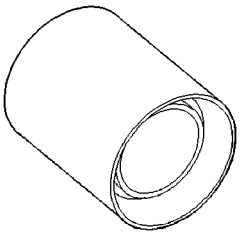

Installer 6053

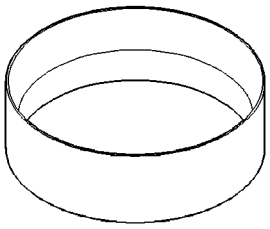

Installer 5067

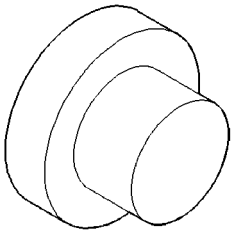

Button 6055

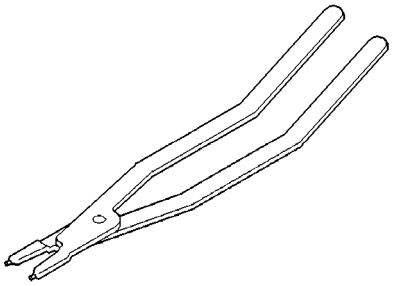

Pliers 6051

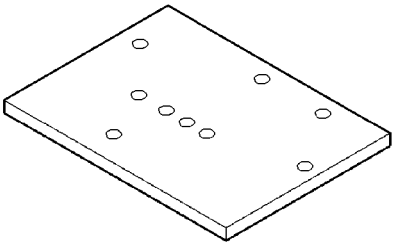

Plate 6056

41TE AUTOMATIC TRANSAXLE (Continued)

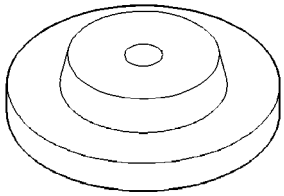

Disk 6057

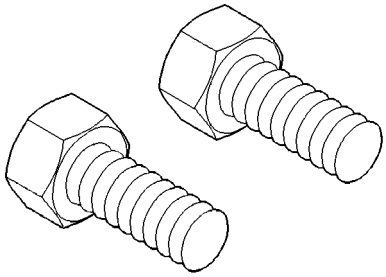

Bolt 6260

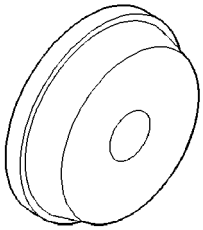

Installer 6061

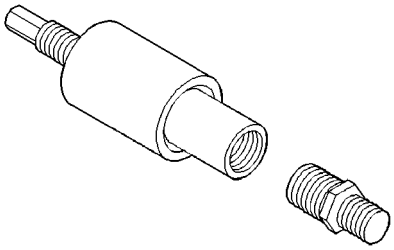

Installer 6261

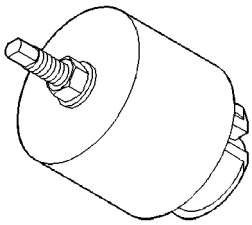

Remover 6062-A

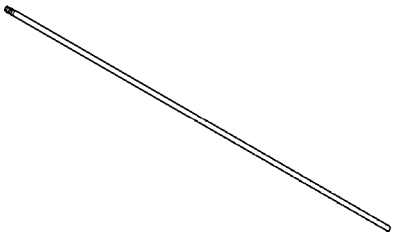

Tip 6268

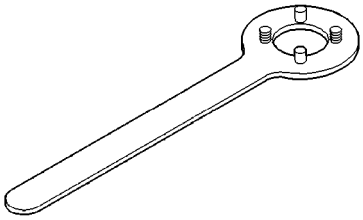

Holder 6259

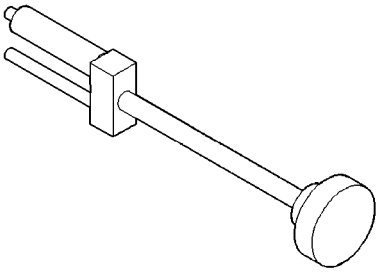

Remover/Installer 6301

41TE AUTOMATIC TRANSAXLE (Continued)

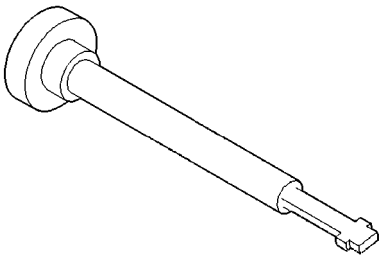

Remover/Installer 6302

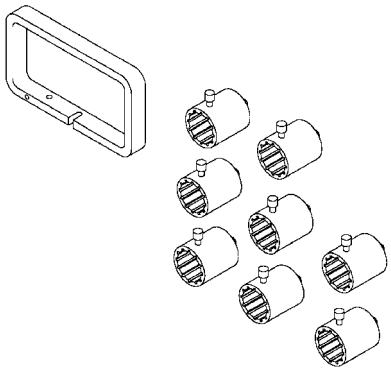

End Play Socket Set 8266

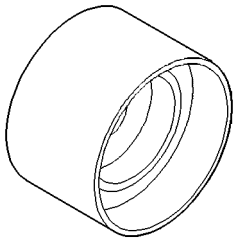

Installer 6536-A

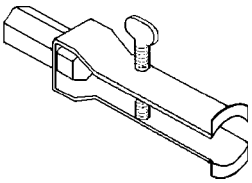

Puller 7794-A

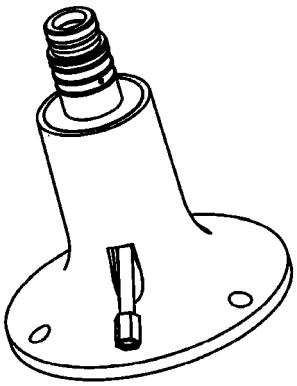

Input Clutch Pressure Fixture 8391

ACCUMULATOR

DESCRIPTION

The 41te underdrive, overdrive, low/reverse, and 2/4 clutch hydraulic circuits each contain an accumulator. An accumulator typically consists of a piston, seals, return spring(s), and a cover or plug. The overdrive and underdrive accumulators are located within the transaxle case, and are retained by the valve body (Fig. 157).

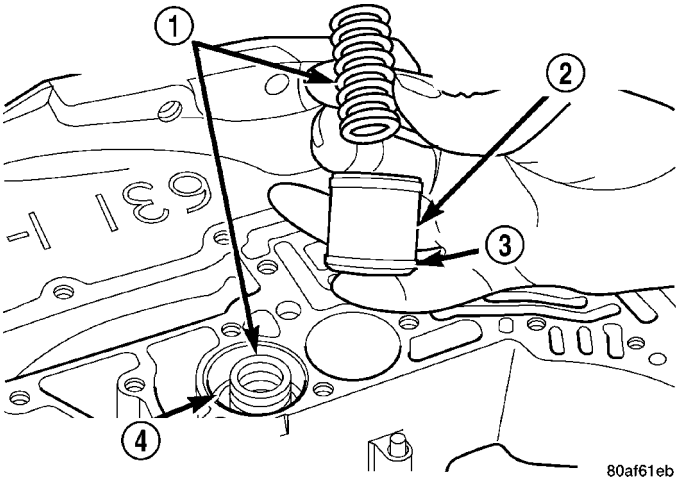

Fig. 157 Underdrive and Overdrive Accumulators

1 - RETURN SPRING
2 - UNDERDRIVE CLUTCH ACCUMULATOR
3 - SEAL RING (2)
4 - OVERDRIVE CLUTCH ACCUMULATOR

The low reverse accumulator (Fig. 158) is also located within the transaxle case, but the assembly is retained by a cover and a snap-ring.

The 2/4 accumulator is located in the valve body. It is retained by a cover and retaining screws (Fig. 159).

OPERATION

The function of an accumulator is to cushion the application of a frictional clutch element. When pressurized fluid is applied to a clutch circuit, the application force is dampened by fluid collecting in the respective accumulator chamber against the piston and spring(s). The intended result is a smooth, firm clutch application.

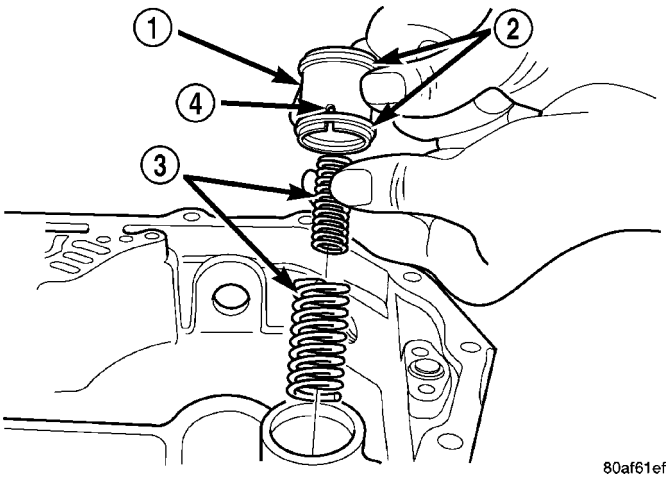

Fig. 158 Low/Reverse Accumulator Assembly

1 - ACCUMULATOR PISTON
2 - SEAL RINGS
3 - RETURN SPRINGS
4 - (NOTE NOTCH)

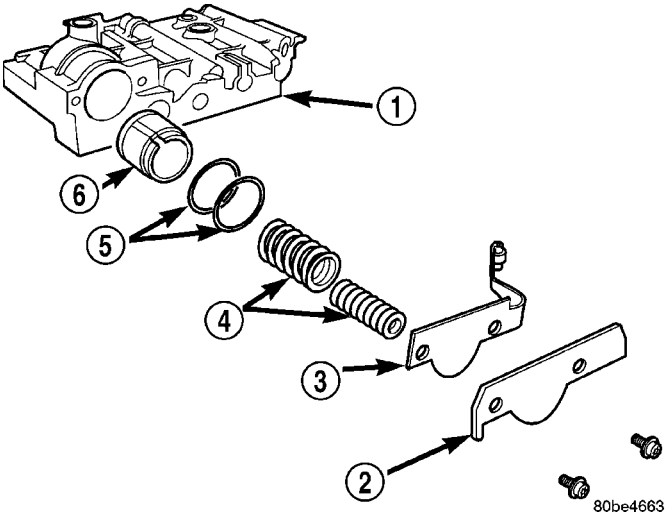

Fig. 159 2/4 Accumulator Assembly

1 - VALVE BODY
2 - RETAINER PLATE
3 - DETENT SPRING
4 - SPRINGS
5 - SEALS
6 - PISTON

AUTOSTICK SWITCH

DESCRIPTION

Autostick is a driver–interactive transaxle feature that offers manual gear shifting capability of an automatic transaxle.

OPERATION

When the shifter is moved into the Autostick position, the transaxle remains in whatever gear it was using before Autostick was activated. Moving the shifter to the left (towards the driver) causes a downshift and moving to the right (towards the passenger) causes an upshift. The instrument cluster will illuminate the selected gear. The vehicle can be launched in 1st, 2nd, or 3rd gear while in the Autostick mode. The speed control is operable in 3rd and 4th gear Autostick mode. Speed control will be deactivated if the transaxle is shifted to 2nd gear. Shifting into OD position cancels the Autostick mode, and the transaxle resumes the OD shift schedule.

AUTOMATIC OVERRIDES

For safety, durability, and driveability, some shifts are executed automatically or prevented.

AUTOMATIC SHIFTS WILL OCCUR UNDER THE FOLLOWING CONDITIONS

TYPE OF SHIFT	APPROXIMATE SPEED
4-3 coast downshift	13 mph
3-2 coast downshift	9 mph
2-1 coast downshift	5 mph
1-2 upshift	6300 engine rpm
2-3 upshift	6300 engine rpm
4-3 kickdown shift	13-47 mph w/sufficient throttle

MANUAL SHIFTS ARE NOT PERMITTED UNDER THE FOLLOWING CONDITIONS

TYPE OF SHIFT	APPROXIMATE SHIFT POINT
3-4 upshift	Below 15 mph
3-2 downshift	Above 74 mph @ closed throttle or 70 mph otherwise
2-1 downshift	Above 41 mph @ closed throttle or 38 mph otherwise

DRIVING CLUTCHES

DESCRIPTION

Three hydraulically applied input clutches are used to drive planetary components. The underdrive, overdrive, and reverse clutches are considered input clutches and are contained within the input clutch assembly (Fig. 160). The input clutch assembly also contains:

- Input shaft
- Input hub
- Clutch retainer
- Underdrive piston
- Overdrive/reverse piston
- Overdrive hub
- Underdrive hub

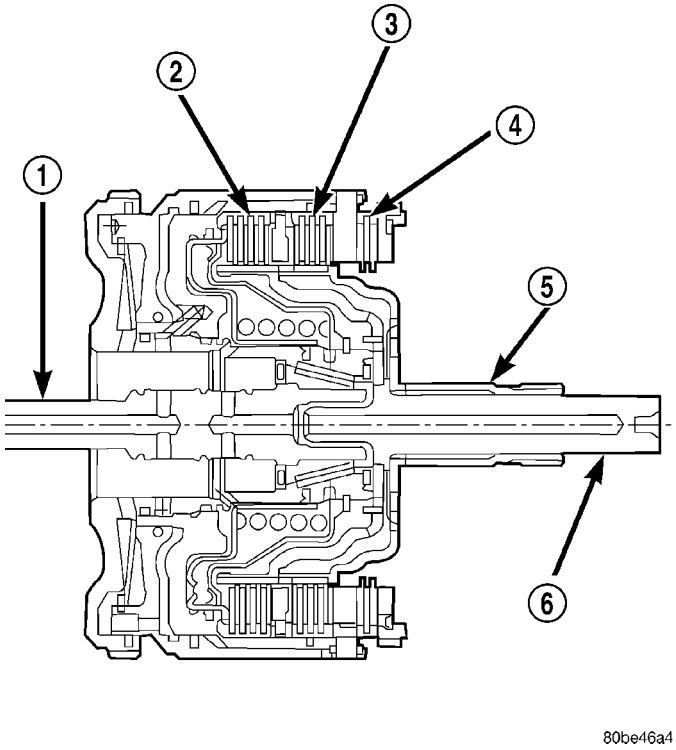

Fig. 160 Input Clutch Assembly

1 - INPUT SHAFT
2 - UNDERDRIVE CLUTCH
3 - OVERDRIVE CLUTCH
4 - REVERSE CLUTCH
5 - OVERDRIVE SHAFT
6 - UNDERDRIVE SHAFT

OPERATION

The three input clutches are responsible for driving different components of the planetary geartrain.

NOTE: Refer to the "Elements In Use" chart in Diagnosis and Testing for a collective view of which clutch elements are applied at each position of the selector lever.

UNDERDRIVE CLUTCH

The underdrive clutch is hydraulically applied in first, second, and third (direct) gears by pressurized fluid against the underdrive piston. When the underdrive clutch is applied, the underdrive hub drives the rear sun gear.

OVERDRIVE CLUTCH

The overdrive clutch is hydraulically applied in third (direct) and overdrive gears by pressurized fluid against the overdrive/reverse piston. When the overdrive clutch is applied, the overdrive hub drives the front planet carrier.

REVERSE CLUTCH

The reverse clutch is hydraulically applied in reverse gear only by pressurized fluid against the overdrive/reverse piston. When the reverse clutch is applied, the front sun gear assembly is driven.

FINAL DRIVE

DESCRIPTION

The 41TE differential is a conventional open design. It consists of a ring gear and a differential case. The differential case consists of pinion and side gears, and a pinion shaft. The differential case is supported in the transaxle by tapered roller bearings (Fig. 161).

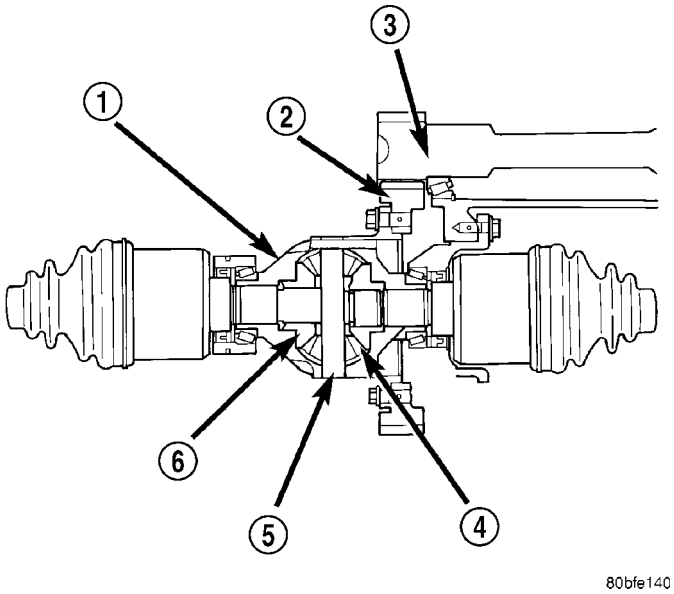

Fig. 161 Differential Assembly

1 - DIFFERENTIAL CASE
2 - RING GEAR
3 - TRANSFER SHAFT
4 - PINION GEAR
5 - PINION SHAFT
6 - SIDE GEAR

FINAL DRIVE (Continued)

OPERATION

The differential assembly is driven by the transfer shaft by way of the differential ring gear. The ring gear drives the differential case, and the case drives the driveshafts through the differential gears. The differential pinion and side gears are supported in the case by thrust washers and a pinion shaft. Differential pinion and side gears make it possible for front tires to rotate at different speeds while cornering.

DISASSEMBLY

NOTE: The differential is serviced as an assembly. The only parts that are serviceable within the differential are the differential bearing cups and cones. If any other part fails within the differential, you must replace the differential assembly along with the transfer shaft.

The transfer shaft should be removed for differential repair and bearing turning torque checking.

(1) Remove the differential cover and bolts (Fig. 162) (Fig. 163).

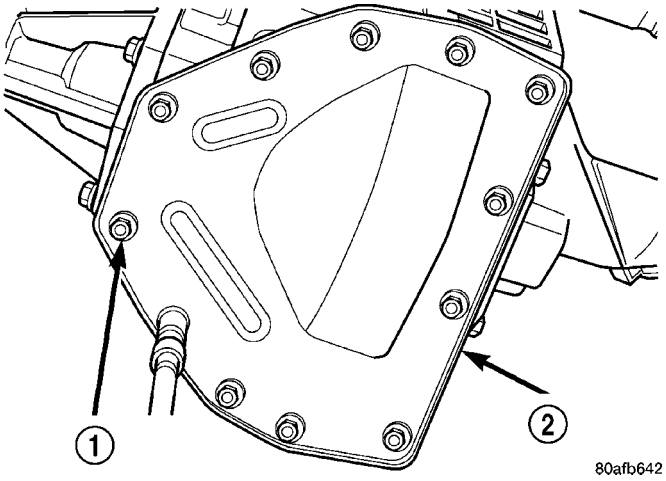

Fig. 162 Differential Cover Bolts

1 - DIFFERENTIAL COVER BOLTS
2 - DIFFERENTIAL COVER

(2) Remove the differential bearing retainer and bolts (Fig. 164) (Fig. 165).

(3) Using a plastic hammer, remove extension housing/adapter plate on the right side of the transaxle.

WARNING: HOLD ONTO DIFFERENTIAL ASSEMBLY TO PREVENT IT FROM ROLLING OUT OF HOUSING.

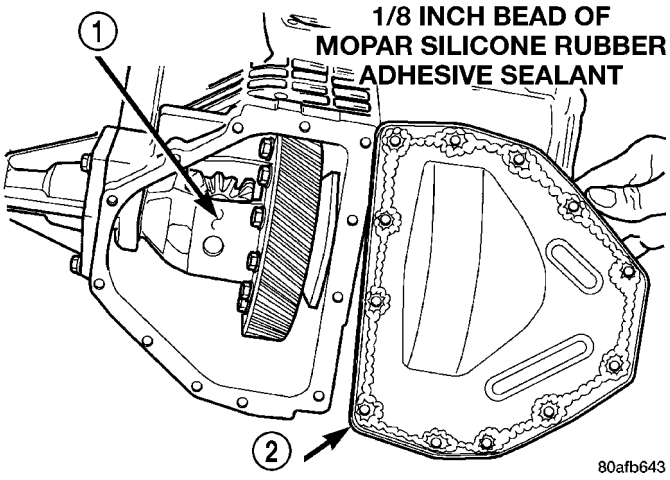

Fig. 163 Remove Differential Cover

1 - DIFFERENTIAL ASSEMBLY
2 - DIFFERENTIAL COVER

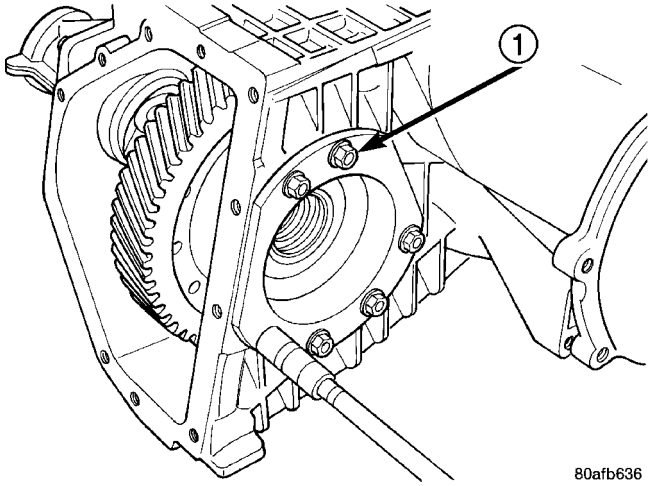

Fig. 164 Differential Retainer Bolts

1 - DIFFERENTIAL RETAINER BOLTS

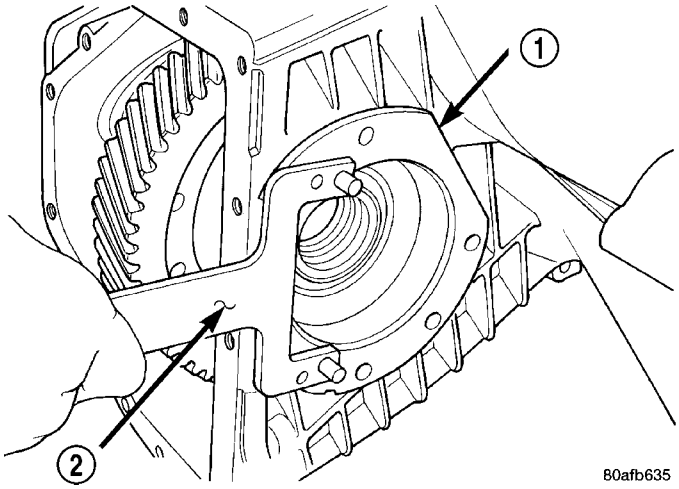

Fig. 165 Remove Bearing Retainer

1 - DIFFERENTIAL BEARING RETAINER
2 - TOOL L-4435

FINAL DRIVE (Continued)

(4) Remove differential assembly.

(5) Set up dial indicator set C-3339 and tool C-4996 as shown in (Fig. 166) (Fig. 167) to measure side gear end play. **Side gear end play must be within 0.001-0.013 in.**

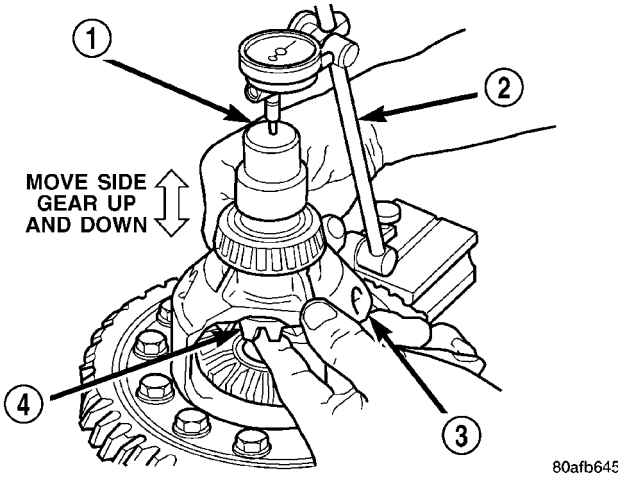

Fig. 166 Checking Side Gear End Play (Extension Housing Side)

1 - SPECIAL TOOL C-4996 (NOTE POSITION)
2 - DIAL INDICATOR SET
3 - DIFFERENTIAL ASSEMBLY
4 - SIDE GEAR

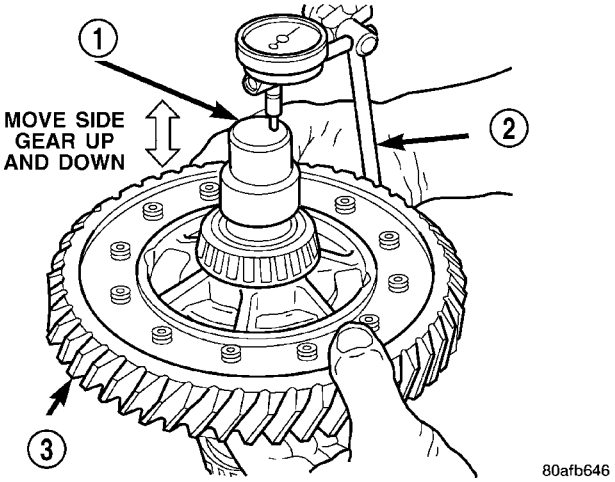

Fig. 167 Checking Side Gear End Play (Ring Gear Side)

1 - SPECIAL TOOL C-4996 (NOTE POSITION)
2 - DIAL INDICATOR SET
3 - DIFFERENTIAL ASSEMBLY

(6) Use Miller Special Tool 5048, 5048-3 Collets, and L-4539-2 Button to remove the differential bearing cone on the extension housing side.

(7) Use Miller Special Tool 5048, 5048-4 Collets, and L-4539-2 Button to remove the differential bearing cone on the bearing retainer side (Fig. 168) (Fig. 169) (Fig. 170).

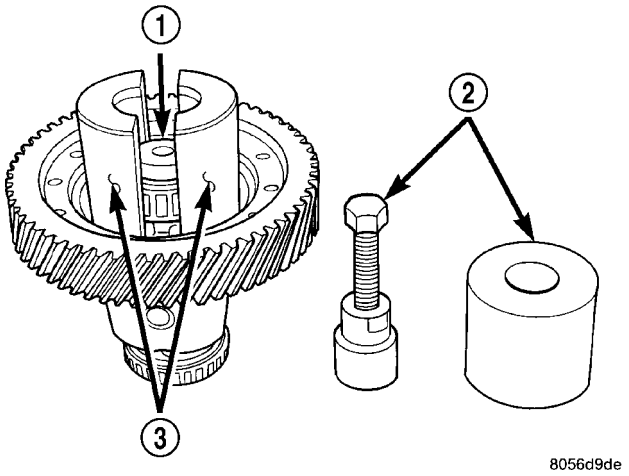

Fig. 168 Position Button and Collets Onto Differential and Bearing (Ring Gear Side)

1 - SPECIAL TOOL L-4539-2
2 - SPECIAL TOOL 5048
3 - SPECIAL TOOL 5048-4

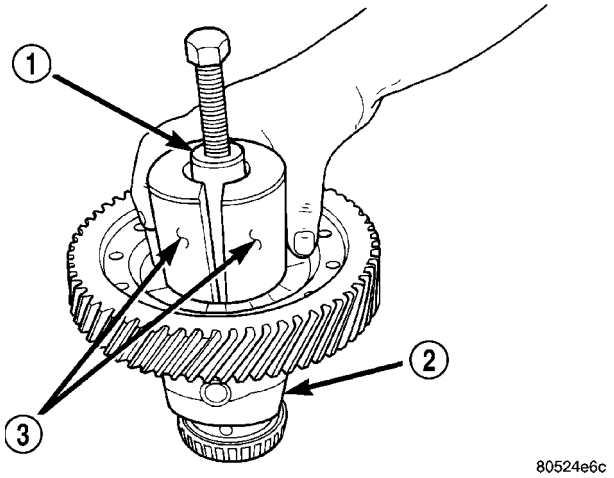

Fig. 169 Position Tool 5048 Over Button and Collets at Differential Bearing (Ring Gear Side)

1 - SPECIAL TO0L 5048
2 - DIFFERENTIAL
3 - SPECIAL TOOL 5048-4

FINAL DRIVE (Continued)

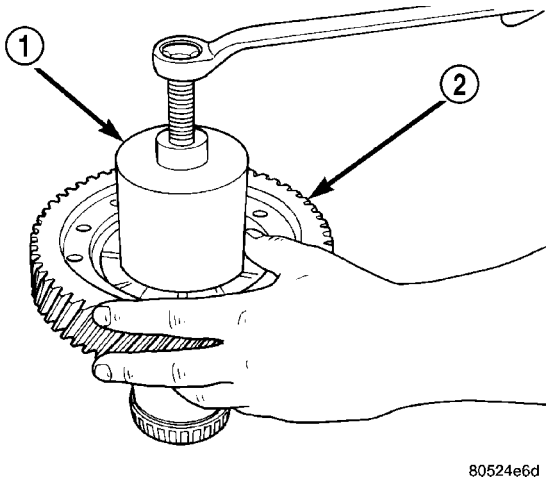

Fig. 170 Remove Differential Bearing Cone (Ring Gear Side)

1 - SPECIAL TOOL 5048
2 - RING GEAR

(8) Using Miller Special Tool L-4518, remove the differential bearing race from the extension housing/adapter plate.

(9) Using Miller Special Tool 6062A, remove the differential bearing race from the bearing retainer (Fig. 171) (Fig. 172).

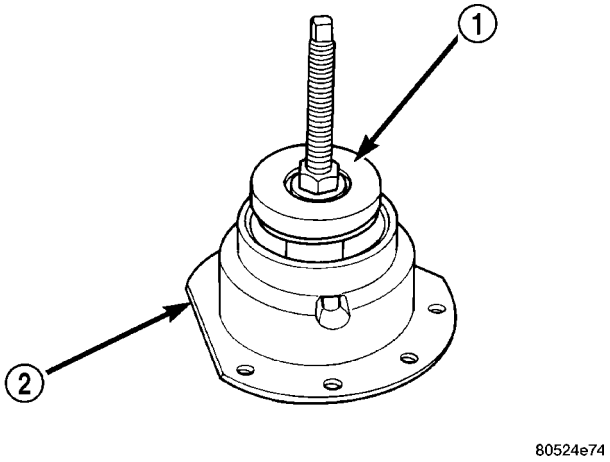

Fig. 171 Position Bearing Cup Remover Tool in Retainer

1 - SPECIAL TOOL 6062A
2 - DIFFERENTIAL BEARING RETAINER

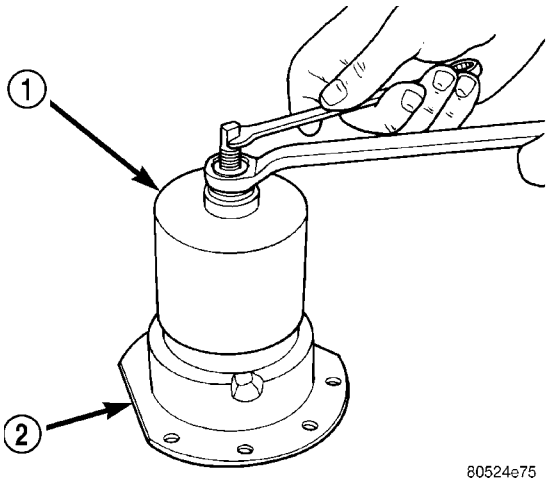

Fig. 172 Remove Bearing Cup

1 - SPECIAL TOOL 6062A
2 - DIFFERENTIAL BEARING RETAINER

DIFFERENTIAL SERVICE TOOLS

COMPONENT	REMOVER	INSTALLER
Diff. Bear. On Retainer Side	5048, 5048-4 Collets, L-4539-2 Button	5052, C-4171
Diff. Bear. On Ext. Hous. Side	5048, 5048-3 Collets, L-4539-2 Button	L-4410, C-4171
Diff. Race. On Retainer Side	6062-A	6061, C-4171
Diff. Race. On Ext. Hous. Side	L-4518	L-4520, C-4171
Extension Housing Seal	7794-A, C-637 Slide Hammer	L-4520, C-4171
Bearing Retainer Seal	794-A, C-637 Slide Hammer	L-4520, C-4171

FINAL DRIVE (Continued)

ASSEMBLY

NOTE: The differential is serviced as an assembly. The only parts that are serviceable within the differential are the differential bearing cups and cones. If any other part fails within the differential, you must replace the differential assembly along with the transfer shaft.

NOTE: Use Mopar® ATF RTV (MS-GF41), or equivalent, on retainer and extension housing/adapter plate to seal to case.

(1) Using Miller Special Tool L-4410, and C-4171, install differential bearing to differential (extension housing side) (Fig. 173).

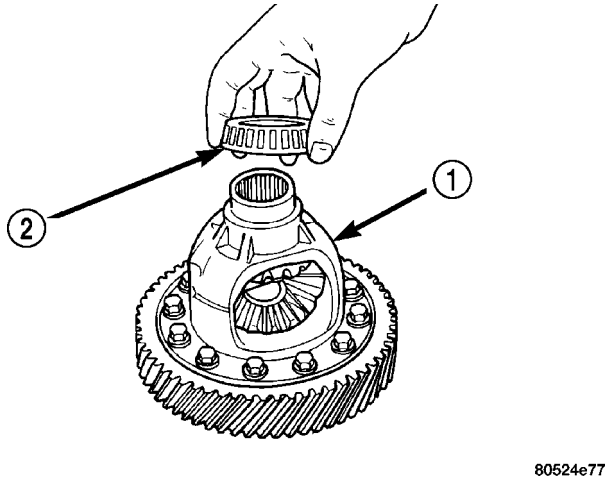

Fig. 173 Position Bearing Cone Onto Differential

1 - DIFFERENTIAL ASSEMBLY
2 - DIFFERENTIAL BEARING

(2) Using Miller Special Tool 5052 and C-4171, install differential bearing to differential (bearing retainer side).

(3) Using Miller Special Tool 6061 and C-4171, install differential bearing race to bearing retainer (Fig. 174).

(4) Using Miller Special Tool L–4520 and C-4171, install differential bearing cup to extension housing.

(5) Measure and adjust differential bearing preload (Refer to 21 - TRANSMISSION/TRANSAXLE/AUTOMATIC - 41TE/FINAL DRIVE - ADJUSTMENTS).

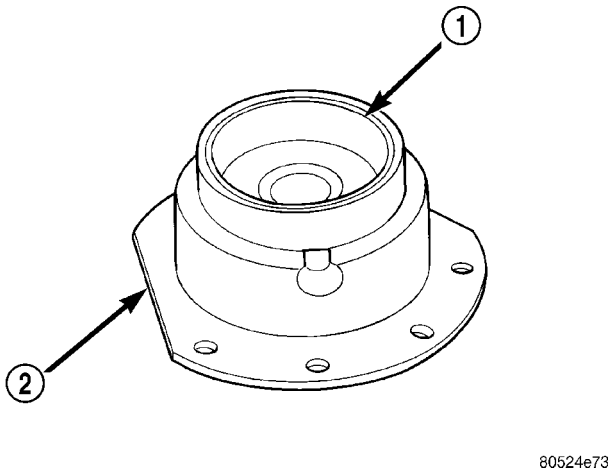

Fig. 174 Differential Bearing Retainer

1 - DIFFERENTIAL BEARING CUP
2 - DIFFERENTIAL BEARING RETAINER

(6) Install differential assembly to case. Install extension housing/adapter plate and bearing retainer.

(7) Install bearing retainer with a bead of Mopar® ATF RTV (MS-GF41) and torque bolts (Fig. 175) to 28 N·m (250 in. lbs.).

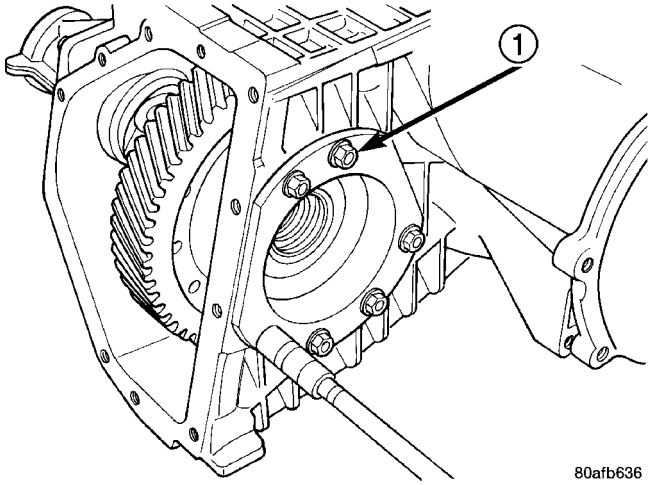

Fig. 175 Differential Retainer Bolts

1 - DIFFERENTIAL RETAINER BOLTS

(8) Install extension housing/adapter plate with a bead of Mopar® ATF RTV (MS-GF41) and torque bolts to 28 N·m (250 in. lbs.).

FINAL DRIVE (Continued)

(9) Install differential cover with a bead of Mopar® ATF RTV (MS-GF41) (Fig. 176) and torque bolts (Fig. 177) to 28 N·m (250 in. lbs.).

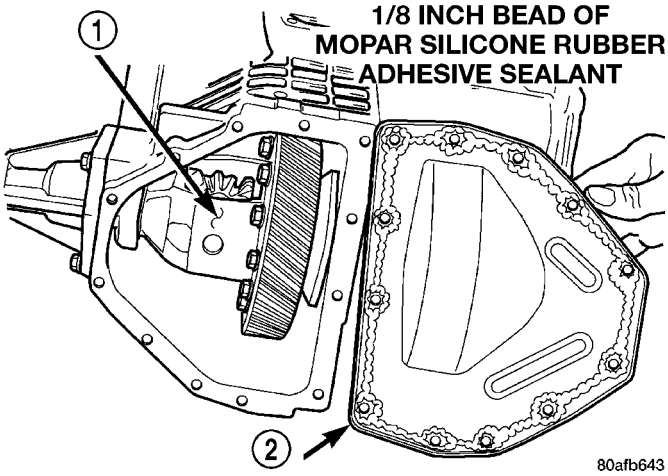

Fig. 176 Install Differential Cover

1 - DIFFERENTIAL ASSEMBLY
2 - DIFFERENTIAL COVER

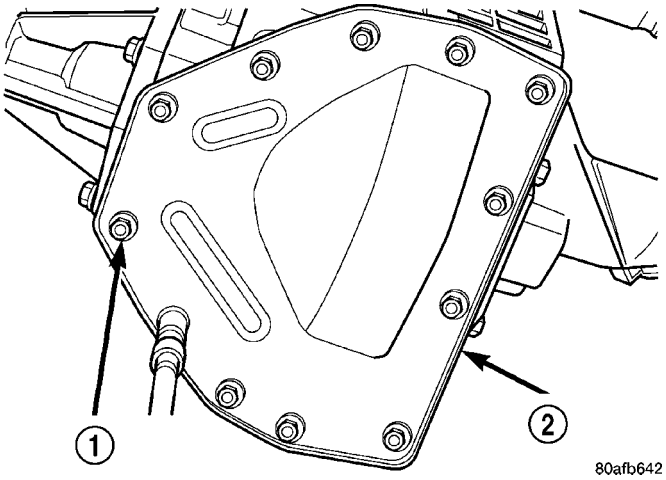

Fig. 177 Differential Cover Bolts

1 - DIFFERENTIAL COVER BOLTS
2 - DIFFERENTIAL COVER

ADJUSTMENTS

DIFFERENTIAL BEARING PRELOAD MEASUREMENT AND ADJUSTMENT

NOTE: Perform all differential bearing preload measurements with the transfer shaft and gear removed.

DIFFERENTIAL BEARING PRELOAD ADJUSTMENT USING EXISTING SHIM

(1) Position the transaxle assembly vertically on the support stand, differential bearing retainer side up.

(2) Install Tool L-4436A into the differential and onto the pinion mate shaft (Fig. 178).

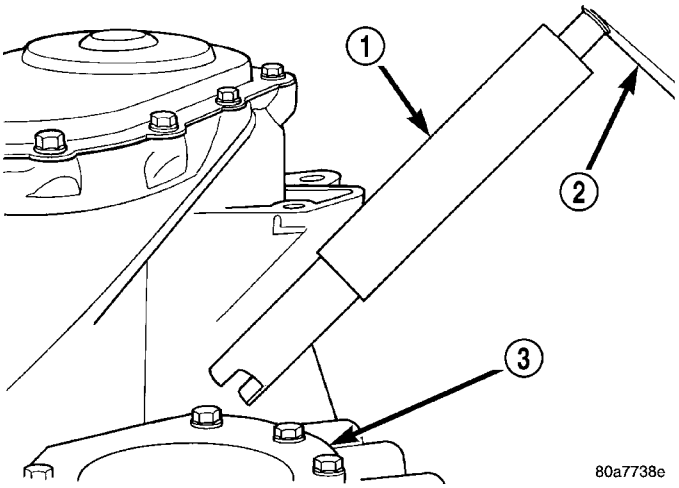

Fig. 178 Tool L-4436 and Torque Wrench

1 - SPECIAL TOOL L-4436–A
2 - TORQUE WRENCH
3 - DIFFERENTIAL BEARING RETAINER

(3) Rotate the differential at least one full revolution to ensure the tapered roller bearings are fully seated.

(4) Using Tool L-4436A and an inch-pound torque wrench, check the turning torque of the differential (Fig. 179). **The turning torque should be between 5 and 18 inch-pounds.**

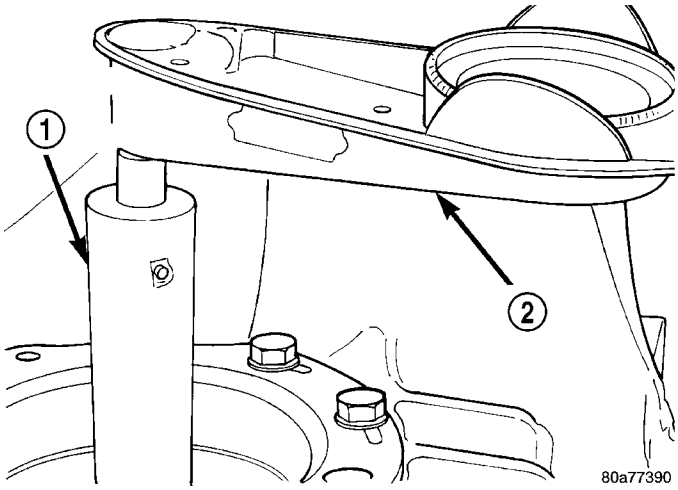

Fig. 179 Checking Differential Bearings Turning Torque

1 - SPECIAL TOOL L-4436–A
2 - TORQUE WRENCH

FINAL DRIVE (Continued)

(5) If the turning torque is within specifications, remove tools. Setup is complete.

(6) If turning torque is not within specifications proceed with the following steps.

(a) Remove differential bearing retainer from the transaxle case.

(b) Remove the bearing cup from the differential bearing retainer using Tool 6062A.

(c) Remove the existing shim from under the cup.

(d) Measure the existing shim.

(e) If the turning torque was too high when measured, install a 0.05 mm (0.002 inch) thinner shim. If the turning torque is was too low, install a 0.05 mm (0.002 inch) thicker shim. Repeat until 5 to 18 inch-pounds turning torque is obtained. Oil Baffle is not required to be installed when making shim selection.

(f) Install the proper shim under the bearing cup. Make sure the oil baffle is installed properly in the bearing retainer, below the bearing shim and cup.

(g) Install the differential bearing retainer using Tool 5052 and C-4171. Seal the retainer to the housing with MOPAR® Adhesive Sealant and torque bolts to 28 N·m (250 in. lbs.).

(7) Using Tool L-4436A and an inch-pound torque wrench, recheck the turning torque of the differential (Fig. 179). **The turning torque should be between 5 and 18 inch-pounds.**

Shim thickness need be determined only if any of the following parts are replaced:

- Transaxle case
- Differential carrier
- Differential bearing retainer
- Extension housing
- Differential bearing cups and cones

DIFFERENTIAL BEARING SHIM CHART

PART NUMBER	SHIM THICKNESS	
	MM	INCH
4659257	.980	0.0386
4659258	1.02	0.0402
4659259	1.06	0.0418
4659260	1.10	0.0434
4659261	1.14	0.0449
4659262	1.18	0.0465
4659263	1.22	0.0481
4659264	1.26	0.0497
4659265	1.30	0.0512
4659266	1.34	0.0528
4659267	1.38	0.0544
4659268	1.42	0.0560
4659269	1.46	0.0575
4659270	1.50	0.0591
4659271	1.54	0.0607
4659272	1.58	0.0623
4659273	1.62	0.0638
4659274	1.66	0.0654
4659275	1.70	0.0670
4659283	2.02	0.0796
4659284	2.06	0.0812

FINAL DRIVE (Continued)

PRELOAD ADJUSTMENT W/O SHIM

(1) Remove the bearing cup from the differential bearing retainer using Miller special Tool 6062A.

(2) Remove existing shim from under bearing cup.

(3) Reinstall the bearing cup into the retainer using Miller Special Tool 6061, and C-4171.

NOTE: Oil baffle is not required when making the shim calculation.

(4) Install the bearing retainer into the case. Torque bolts to 28 N•m (250 in. lbs.).

(5) Position the transaxle assembly vertically on the support stand and install Miller Special Tool L-4436-A into the bearing retainer.

(6) Rotate the differential at least one full revolution to ensure the tapered roller bearings are fully seated.

(7) Attach a dial indicator to the case and zero the dial. Place the tip on the end of Special Tool L-4436-A.

(8) Place a large screwdriver to each side of the ring gear and lift. Check the dial indicator for the amount of end play.

CAUTION: Do not damage the transaxle case and/or differential retainer sealing surface.

(9) Using the end play measurement that was determined, add 0.18mm (0.007 inch). This should give you between 5 and 18 inch pounds of bearing preload. Refer to the Differential Bearing Shim Chart to determine which shim to use.

(10) Remove the differential bearing retainer. Remove the bearing cup.

(11) Install the oil baffle. Install the proper shim combination under the bearing cup.

(12) Install the differential bearing retainer. Seal the retainer to the housing with Mopar® Silicone Rubber Adhesive Sealant. Torque bolts to 28 N•m (250 in. lbs.).

(13) Using Miller Special Tool L-4436-A and an inch-pound torque wrench, check the turning torque of the differential (Fig. 179). The turning torque should be between 5-18 inch-pounds.

NOTE: If turning torque is too high install a 0.05mm (0.002 inch) thicker shim. If the turning torque is too low, install a 0.05mm (0.002 inch) thinner shim. Repeat until 5-18 inch-pounds of turning torque is obtained.

FLUID

STANDARD PROCEDURE

FLUID LEVEL AND CONDITION CHECK

NOTE: Only transmission fluid of the type labeled Mopar ATF+4 (Automatic Transmission Fluid) should be used in this transaxle.

FLUID LEVEL CHECK

The transmission sump has a fluid level indicator (dipstick) to check oil similar to most automatic transmissions. It is located on the left side of the engine. Be sure to wipe all dirt from dipstick handle before removing.

The torque converter fills in both the P Park and N Neutral positions. Place the selector lever in P Park to be sure that the fluid level check is accurate. **The engine should be running at idle speed for at least one minute, with the vehicle on level ground.** At normal operating temperature 82° C (180° F), the fluid level is correct if it is in the HOT region on the oil level indicator (Fig. 180). The fluid level should be within the COLD region of the dipstick at 27° C (80° F) fluid temperature.

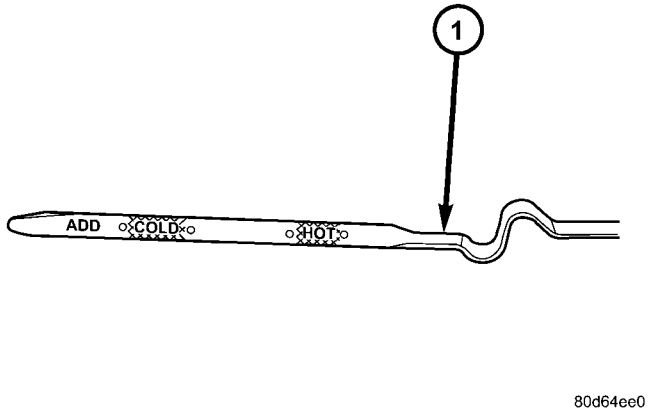

Fig. 180 Fluid Level Indicator

1 - FLUID LEVEL INDICATOR

FLUID (Continued)

FLUID LEVEL CHECK USING DRB

NOTE: Engine and Transaxle should be at normal operating temperature before performing this procedure.

(1) Start engine and apply parking brake.
(2) Hook up DRB scan tool and select transmission.
(3) Select sensors.
(4) Read the transmission temperature value.
(5) Compare the fluid temperature value with the fluid temperature chart (Fig. 181).
(6) Adjust transmission fluid level shown on the indicator according to the chart.
(7) Check transmission for leaks.

Low fluid level can cause a variety of conditions because it allows the pump to take in air along with the fluid. As in any hydraulic system, air bubbles make the fluid spongy, therefore, pressures will be low and build up slowly.

Improper filling can also raise the fluid level too high. When the transaxle has too much fluid, the gears churn up foam and cause the same conditions which occur with a low fluid level.

In either case, air bubbles can cause overheating and/or fluid oxidation, and varnishing. This can interfere with normal valve, clutch, and accumulator operation. Foaming can also result in fluid escaping from the transaxle vent where it may be mistaken for a leak.

FLUID CONDITION

Along with fluid level, it is important to check the condition of the fluid. When the fluid smells burned, and is contaminated with metal or friction material particles, a complete transaxle recondition is probably required. Be sure to examine the fluid on the dipstick closely. If there is any doubt about its condition, drain out a sample for a double check.

Mopar® ATF+4 (Automatic Transmission Fluid) when new is red in color. The ATF is dyed red so it can be identified from other fluids used in the vehicle such as engine oil or antifreeze. The red color is not permanent and is not an indicator of fluid condition. As the vehicle is driven, the ATF will begin to look darker in color and may eventually become brown. **This is normal.** ATF+4 also has a unique odor that may change with age. Consequently, **odor and color cannot be used to indicate the fluid condition or the need for a fluid change.**

After the fluid has been checked, seat the dipstick fully to seal out water and dirt.

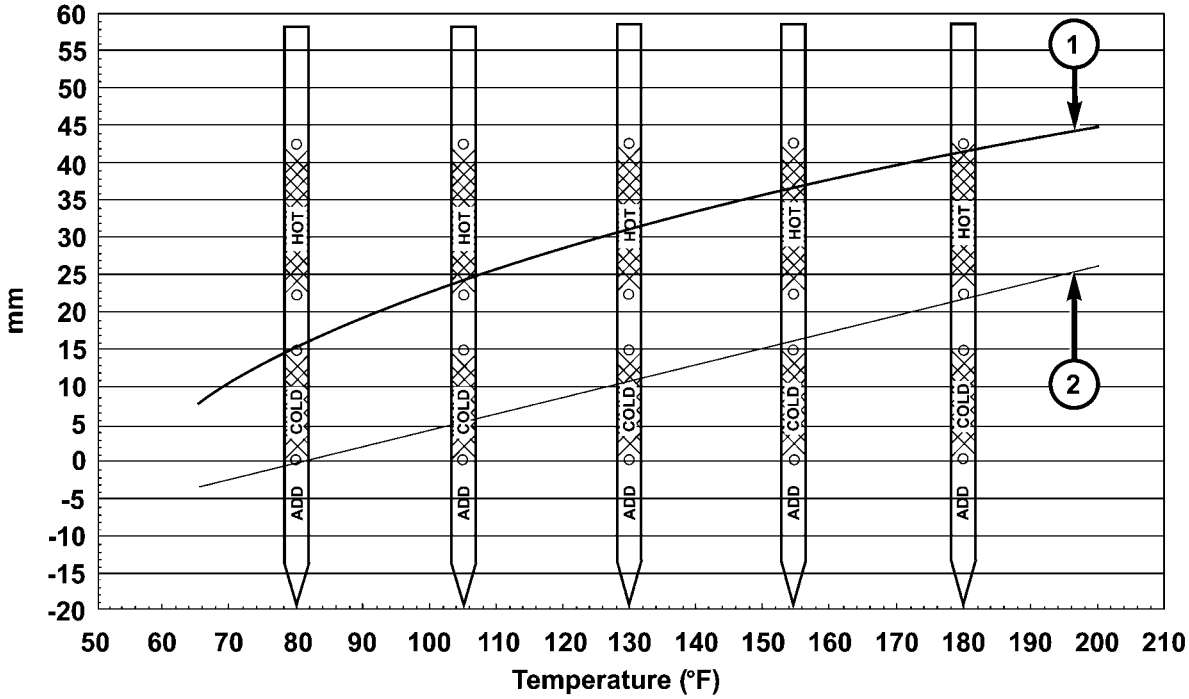

80d64e6e

Fig. 181 Transmission Fluid Temperature Chart

1 - MAX. LEVEL
2 - MIN. LEVEL

FLUID (Continued)

STANDARD PROCEDURE - FLUID AND FILTER SERVICE

NOTE: Refer to the maintenance schedules in LUBRICATION and MAINTENANCE, or the vehicle owner's manual, for the recommended maintenance (fluid/filter change) intervals for this transaxle.

NOTE: Only fluids of the type labeled Mopar® ATF+4 (Automatic Transmission Fluid) should be used. A filter change should be made at the time of the transmission oil change. The magnet (on the inside of the oil pan) should also be cleaned with a clean, dry cloth.

NOTE: If the transaxle is disassembled for any reason, the fluid and filter should be changed.

FLUID/FILTER SERVICE (RECOMMENDED)

(1) Raise vehicle on a hoist. Refer to LUBRICATION and MAINTENANCE for proper procedures. Place a drain container with a large opening, under transaxle oil pan.

(2) Loosen pan bolts and tap the pan at one corner to break it loose allowing fluid to drain, then remove the oil pan.

(3) Install a new filter and o-ring on bottom of the valve body (Fig. 182).

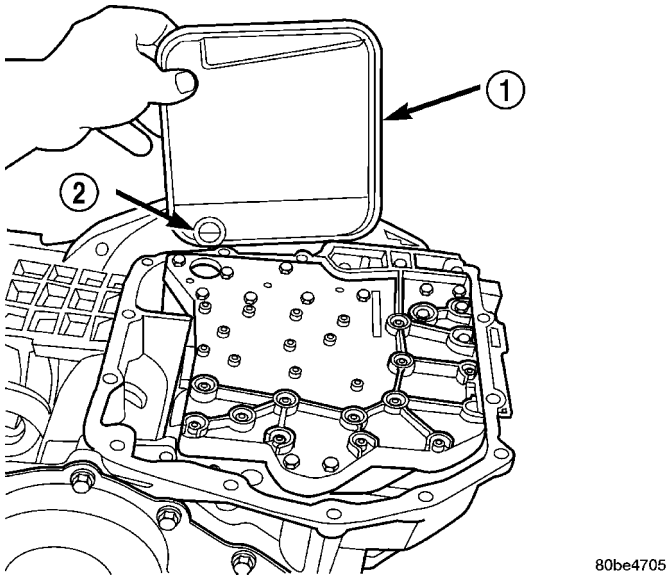

Fig. 182 Filter and O-Ring

1 - OIL FILTER
2 - O-RING

(4) Clean the oil pan and magnet. Reinstall pan using new Mopar Silicone Adhesive sealant. Tighten oil pan bolts to 19 N·m (165 in. lbs.).

(5) Pour four quarts of Mopar® ATF+4 (Automatic Transmission Fluid) through the dipstick opening.

(6) Start engine and allow to idle for at least one minute. Then, with parking and service brakes applied, move selector lever momentarily to each position, ending in the park or neutral position.

(7) Check the transaxle fluid level and add an appropriate amount to bring the transaxle fluid level to 3mm (1/8 in.) below the lowest mark on the dipstick (Fig. 183).

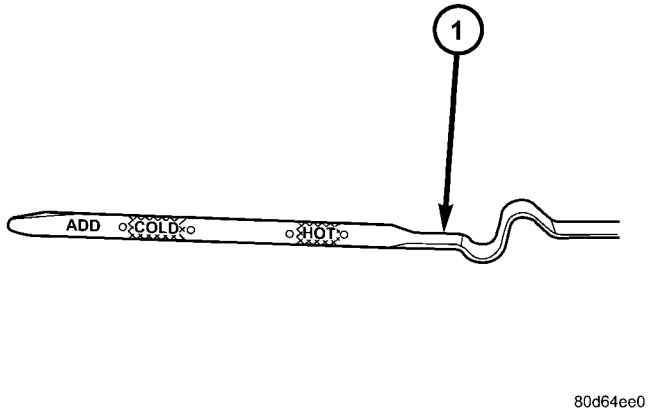

Fig. 183 Fluid Level Indicator

1 - FLUID LEVEL INDICATOR

(8) Recheck the fluid level after the transaxle has reached normal operating temperature (180°F.). Refer to Fluid Level and Condition Check for the proper fluid fill procedure.

(9) To prevent dirt from entering transaxle, make certain that dipstick is fully seated into the dipstick opening.

DIPSTICK TUBE FLUID SUCTION METHOD (ALTERNATIVE)

(1) When performing the fluid suction method, make sure the transaxle is at full operating temperature.

(2) To perform the dipstick tube fluid suction method, use a suitable fluid suction device (Vacula™ or equivalent).

(3) Insert the fluid suction line into the dipstick tube.

NOTE: Verify that the suction line is inserted to the lowest point of the transaxle oil pan. This will ensure complete evacuation of the fluid in the pan.

(4) Follow the manufacturers recommended procedure and evacuate the fluid from the transaxle.

(5) Remove the suction line from the dipstick tube.

FLUID (Continued)

(6) Pour four quarts of Mopar® ATF+4 (Automatic Transmission Fluid) through the dipstick opening.

(7) Start engine and allow to idle for at least one minute. Then, with parking and service brakes applied, move selector lever momentarily to each position, ending in the park or neutral position.

(8) Check the transaxle fluid level and add an appropriate amount to bring the transaxle fluid level to 3mm (1/8 in.) below the lowest mark on the dipstick (Fig. 183).

(9) Recheck the fluid level after the transaxle has reached normal operating temperature (180°F.). (Refer to 21 - TRANSMISSION/TRANSAXLE/AUTOMATIC - 41TE/FLUID - STANDARD PROCEDURE)

(10) To prevent dirt from entering transaxle, make certain that dipstick is fully seated into the dipstick opening.

GEARSHIFT CABLE

REMOVAL

(1) Place transaxle in PARK.

(2) Disconnect battery negative cable at left strut tower.

(3) Remove air cleaner assembly.

(4) Using a pry tool, pry up on cable at manual valve lever and remove cable from lever (Fig. 184).

(5) Remove the screw from the cable bracket at the transaxle (Fig. 184).

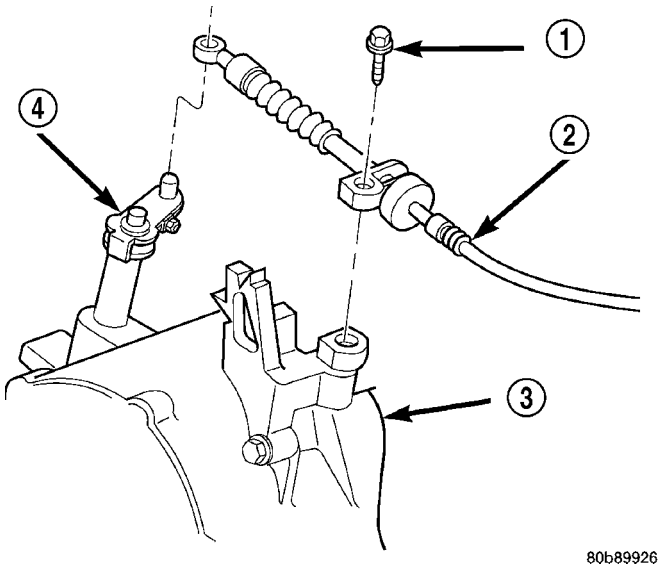

Fig. 184 Gearshift Cable at Transaxle

1 - SCREW
2 - CABLE
3 - TRANSAXLE
4 - SHIFT LEVER

(6) Remove the gearshift knob set screw and knob (Fig. 185).

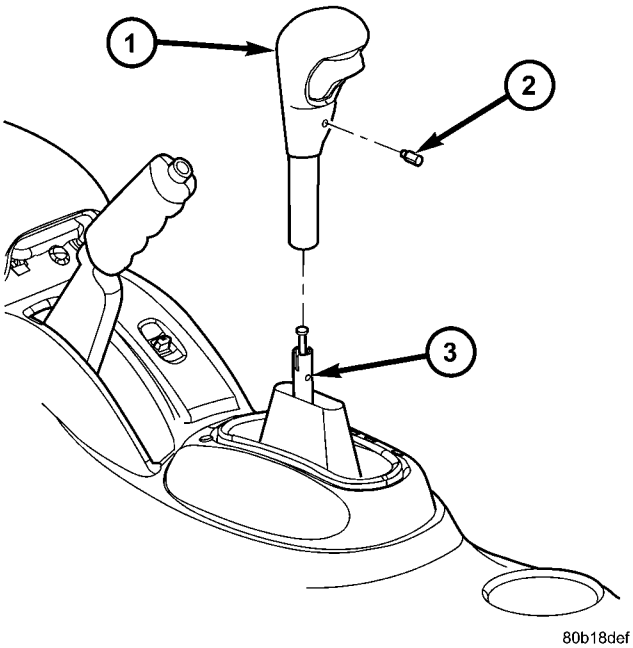

Fig. 185 Gearshift Knob

1 - GEARSHIFT KNOB
2 - SET SCREW
3 - GEARSHIFT MECHANISM

(7) Remove gearshift bezel (Fig. 186). Disconnect range indicator lamp connector.

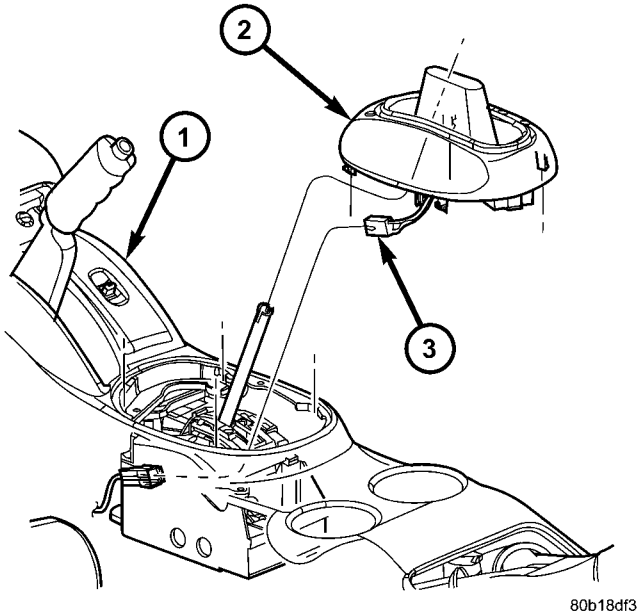

Fig. 186 Gearshift Bezel

1 - CENTER CONSOLE ASSEMBLY
2 - GEARSHIFT BEZEL
3 - LAMP CONNECTOR

GEARSHIFT CABLE (Continued)

(8) Remove center console assembly (Fig. 187).

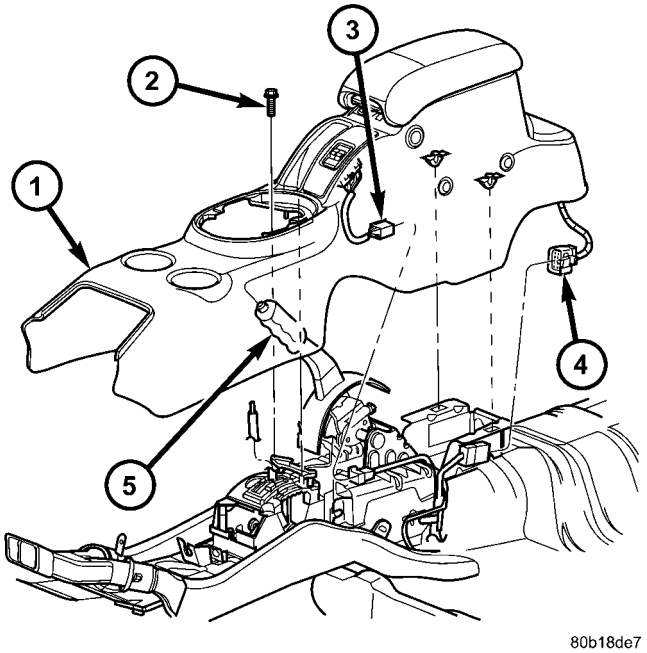

Fig. 187 Center Console Assembly

1 - CENTER CONSOLE
2 - SCREW
3 - IF EQUIPPED
4 - IF EQUIPPED
5 - PARK BRAKE HANDLE

(9) Loosen nut on shift cable adjust lever (Fig. 188).

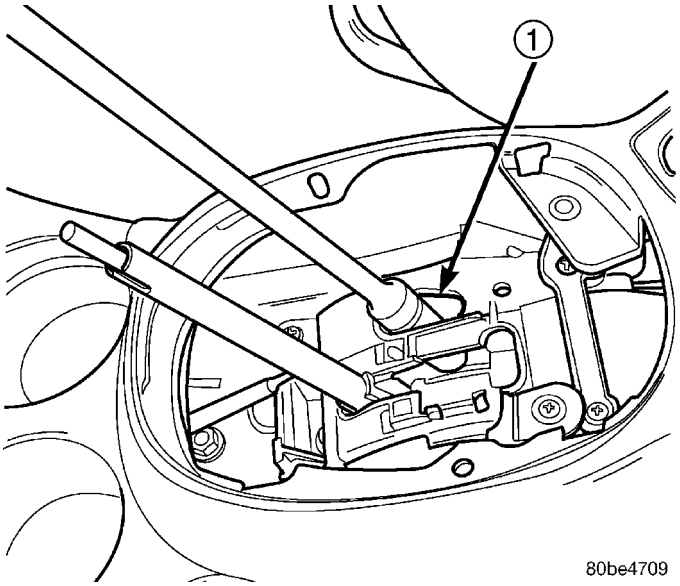

Fig. 188 Shift Cable Adjust Lever Nut—Typical

1 - ACCESS HOLE

(10) Using a flat blade pry tool, remove the shifter cable core end from the shift lever pin (Fig. 189).

(11) Using a flat blade pry tool, pry the cable conduit clip up from the shifter bracket. Pull up on the cable conduit and remove from bracket (Fig. 189).

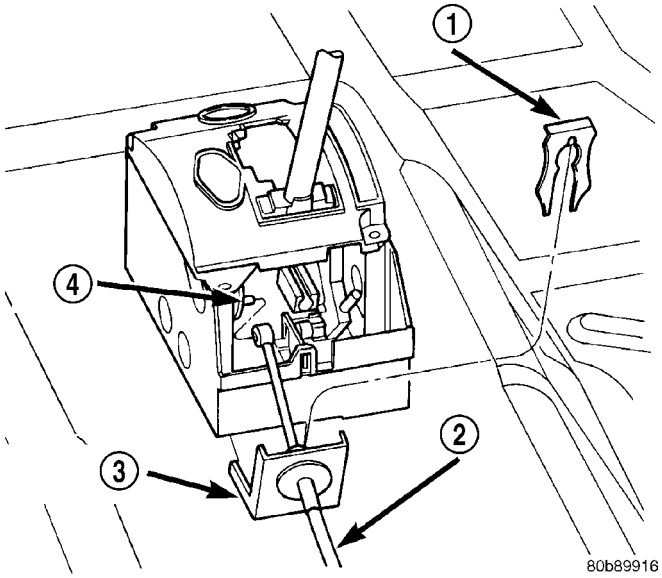

Fig. 189 Gearshift Cable at Floor Shifter

1 - CLIP
2 - CABLE
3 - CONDUIT BRACKET
4 - SHIFT PIN

(12) Raise vehicle on hoist.

(13) Remove the cable grommet from the floor pan area (Fig. 190).

(14) Carefully remove the cable from the underbody by unfolding the cable retainer clip (Fig. 190) as you go along.

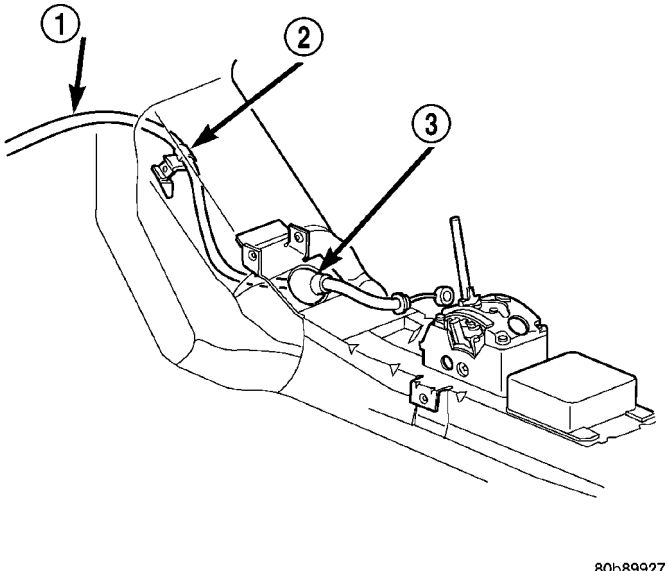

Fig. 190 Gearshift Cable Routing

1 - CABLE
2 - RETAINER CLIP
3 - GROMMET

GEARSHIFT CABLE (Continued)

INSTALLATION

(1) Install cable assy. into floor pan tunnel hole and secure grommet. If necessary, use a synthetic based lubricant to aid in grommet installation.

(2) Position cable into retainer clip (Fig. 190) and tighten clip to secure cable. Route cable up towards transaxle shift lever.

(3) Lower vehicle.

(4) Install cable to transaxle and tighten screw to 14 N·m (125 in. lbs.) (Fig. 184).

(5) Install cable to transaxle shift lever (Fig. 184).

(6) Connect cable to shifter conduit bracket and shift pin. Install cable retaining clip (Fig. 189).

(7) Verify transaxle shift lever and floor shifter lever are in the PARK position.

(8) Tighten cable adjuster nut (Fig. 188) to 23 N·m (200 in. lbs.).

(9) Install center console assembly (Fig. 187).

(10) Install gearshift bezel (Fig. 186).

(11) Install gearshift knob (Fig. 185) and tighten set screw to 2 N·m (20 in.lbs.).

(12) Verify proper cable adjustment. Engine starter should only engage in PARK and NEUTRAL gear shifter positions. If adjustment is required, (Refer to 21 - TRANSMISSION/TRANSAXLE/AUTOMATIC - 41TE/GEAR SHIFT CABLE - ADJUSTMENTS)

ADJUSTMENTS

GEARSHIFT LINKAGE ADJUSTMENT

Normal operation of the Park/Neutral Position Switch provides a quick check to confirm proper linkage adjustment.

Move the selector level slowly forward until it clicks into the (P) Park position. The starter should operate.

After checking the (P) position, move selector slowly toward the (N) Neutral position until lever is in the (N) position. If the starter will also operate at this point the gearshift linkage is properly adjusted. If the starter fails to operate in either position, linkage adjustment is required.

ADJUSTMENT

(1) Set parking brake.

(2) Remove the gearshift knob set screw and knob.

(3) Remove gearshift selector bezel and lamp wiring.

(4) Install the gearshift knob set screw and knob.

(5) Place gearshift lever in the (P) (PARK) position.

(6) Loosen the gearshift cable adjuster nut at the shifter assembly (Fig. 191).

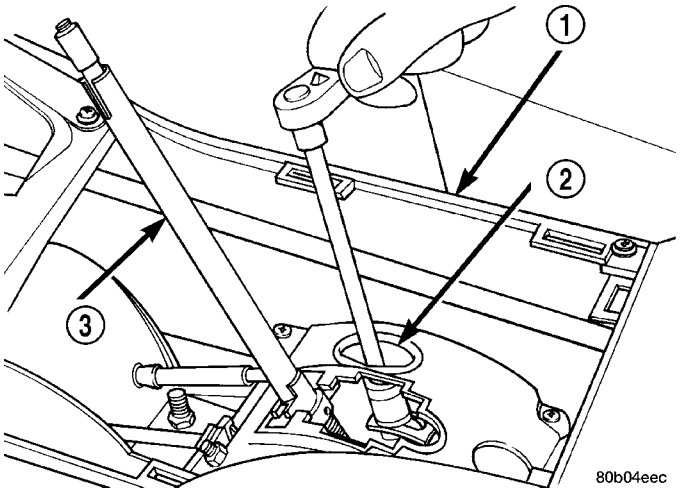

Fig. 191 Shift Cable Adjust Lever Nut

1 - CONSOLE
2 - ACCESS HOLE
3 - SHIFTER HANDLE

(7) Move the gearshift lever on the transaxle to the park position.

(8) Verify the shift lever and transaxle are in park position. Tighten the gearshift cable adjuster nut at the shifter assembly. The gearshift linkage should now be properly adjusted.

(9) Check adjustment as follows:

- Detent position for neutral and drive should be within limits of hand lever gate stops.
- Key start must occur only when shift lever is in park or neutral positions.

GEARSHIFT MECHANISM

REMOVAL

(1) Disconnect negative battery cable and isolate.

(2) Remove the gearshift knob set screw and knob (Fig. 192).

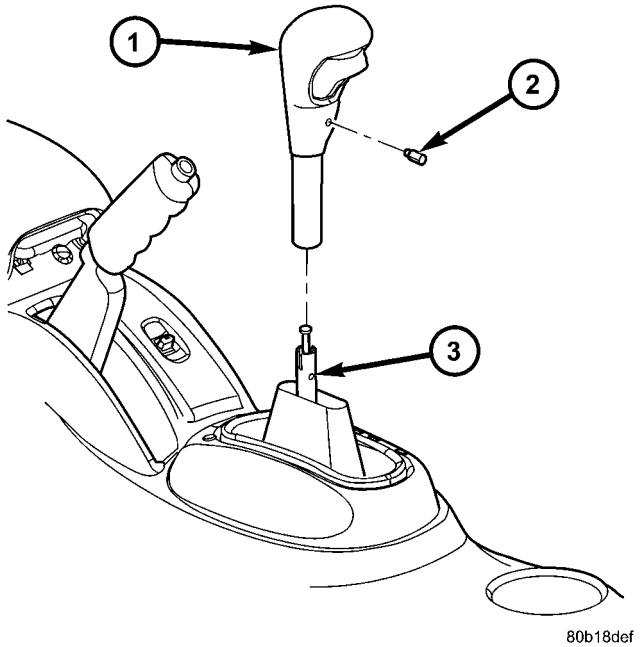

Fig. 192 Gearshift Knob

1 - GEARSHIFT KNOB
2 - SET SCREW
3 - GEARSHIFT MECHANISM

(3) Remove gearshift bezel (Fig. 193). Disconnect range indicator lamp connector.

(4) Remove center console assembly (Fig. 194).

(5) Loosen nut on shift cable adjust lever.

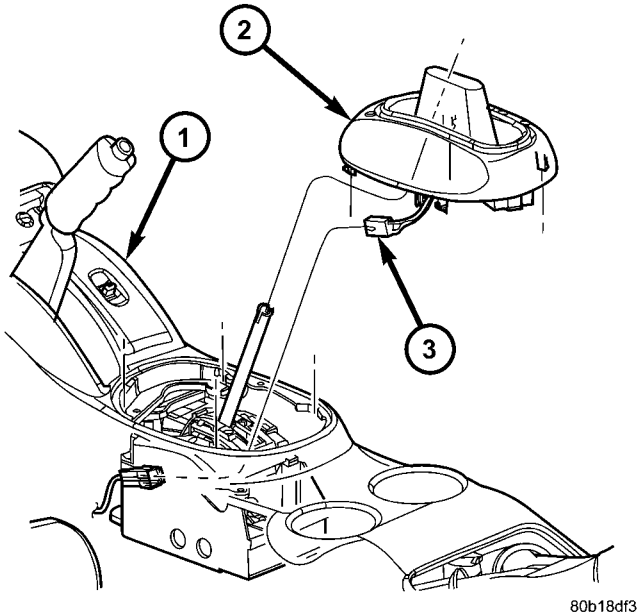

Fig. 193 Gearshift Bezel

1 - CENTER CONSOLE ASSEMBLY
2 - GEARSHIFT BEZEL
3 - LAMP CONNECTOR

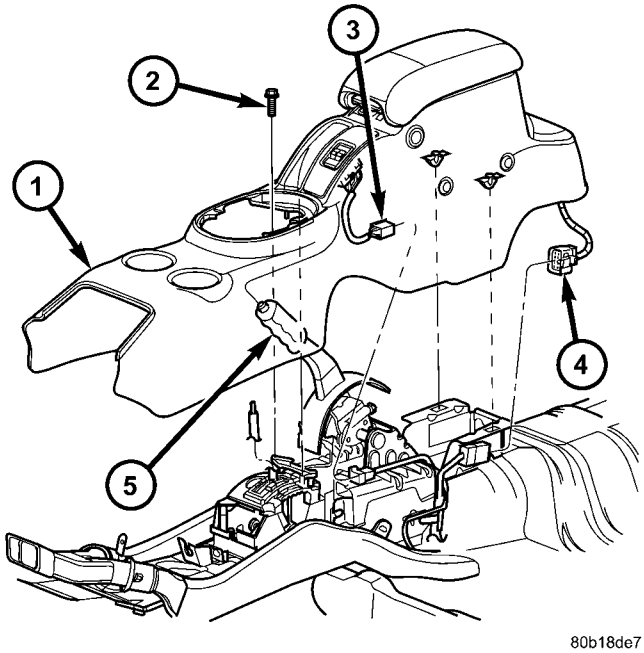

Fig. 194 Center Console Assembly

1 - CENTER CONSOLE
2 - SCREW
3 - IF EQUIPPED
4 - IF EQUIPPED
5 - PARK BRAKE HANDLE

GEARSHIFT MECHANISM (Continued)

(6) Using a flat blade pry tool, remove the shifter cable core end from the shift lever pin (Fig. 195).

(7) Using a flat blade pry tool, pry the cable conduit clip up from the shifter bracket. Pull up on the cable conduit and remove from bracket (Fig. 195).

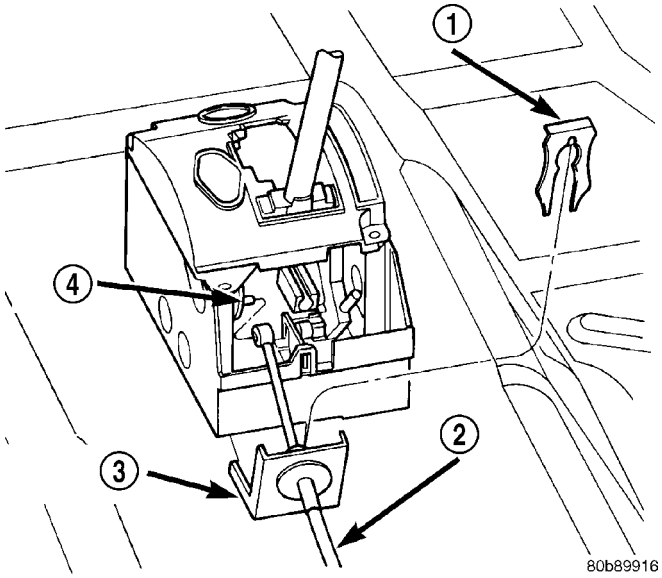

Fig. 195 Gearshift Cable at Floor Shifter—Typical

1 - CLIP
2 - CABLE
3 - CONDUIT BRACKET
4 - SHIFT PIN

(8) Release interlock cable adjuster end by inserting pointed object into shift bracket to disengage lock (Fig. 196). Unsnap the shifter/ignition interlock cable adjuster end from the slot in the gearshift mechanism bracket and disconnect cable core from shifter assembly (Fig. 197).

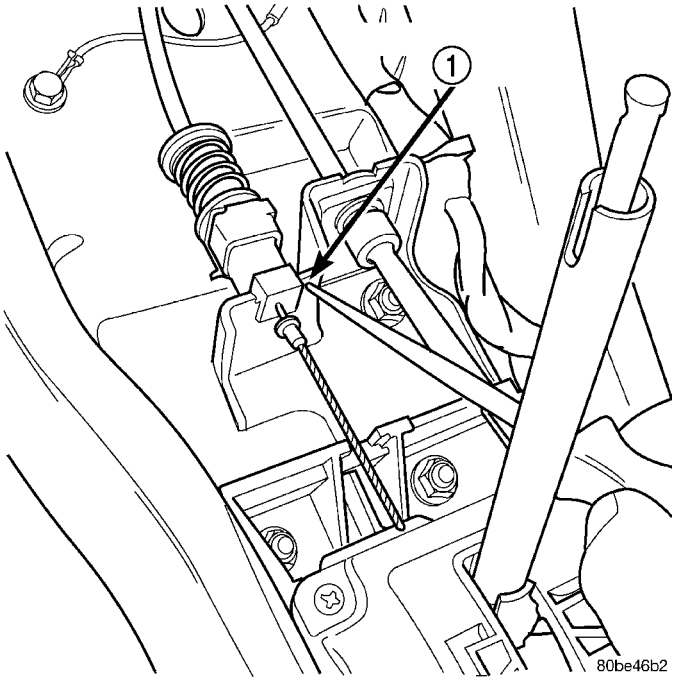

Fig. 196 Release Cable from Bracket at Retainer Lock

1 - RELEASE CABLE HERE

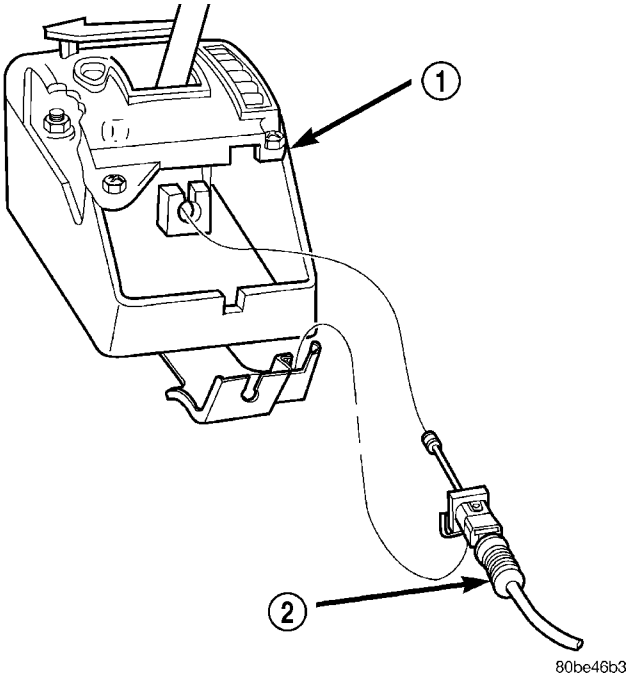

Fig. 197 Interlock Cable at Floor Shifter Assembly

1 - SHIFTER ASSEMBLY
2 - INTERLOCK CABLE

GEARSHIFT MECHANISM (Continued)

(9) Disconnect Autostick connector (if equipped) (Fig. 198).

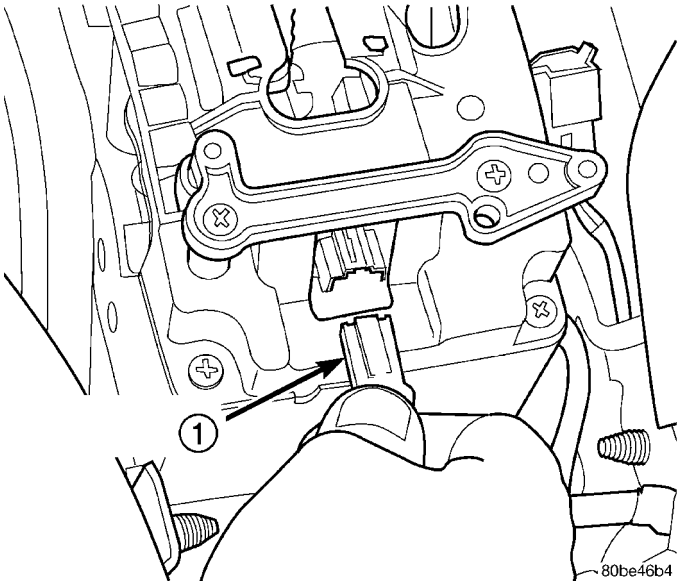

Fig. 198 Autostick Connector (if equipped)

1 - AUTOSTICK CONNECTOR

(10) Remove the five nuts at the base of the shifter assembly. Remove assembly from vehicle (Fig. 199).

INSTALLATION

(1) Install shifter mechanism (Fig. 199). mechanism-to-floor pan nuts to 17 N·m (150 in. lbs.).

(2) Install gearshift cable into conduit bracket and onto shift pin. Install retainer clip (Fig. 195).

(3) Tighten cable adjuster nut to 23 N·m (200 in. lbs.).

(4) Insert interlock cable core wire into interlock adjustment lever groove. Make sure the interlock cable slug is seated in the groove (Fig. 197).

(5) Insert interlock cable adjuster end into bracket and snap into place (Fig. 197).

(6) Adjust the gearshift and interlock cables. Refer to Adjustments in this group.

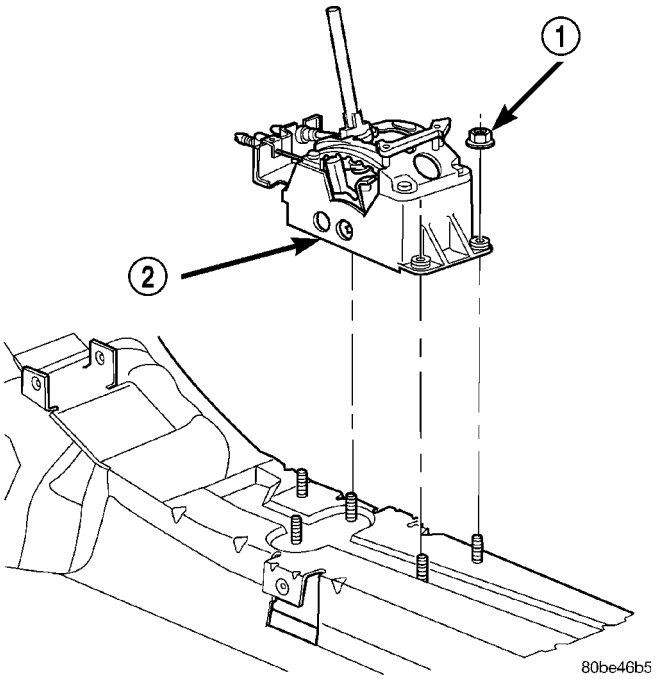

Fig. 199 Shifter Assembly

1 - NUTS (5)
2 - SHIFTER ASSEMBLY

NOTE: Gearshift and Interlock cables MUST be adjusted. Refer to the Adjustments section in this group for proper procedures.

(7) If equipped with Autostick, connect the Autostick connector (Fig. 198).

(8) Install center console assembly (Fig. 194).

(9) Connect range indicator lamp and install gearshift bezel (Fig. 193).

(10) Install the gearshift knob and tighten set screw (Fig. 192) to 2 N·m (20 in.lbs.).

(11) Connect the battery negative cable.

HOLDING CLUTCHES

DESCRIPTION

Two hydraulically applied multi-disc clutches are used to hold planetary geartrain components stationary while the input clutches drive others. The 2/4 and Low/Reverse clutches are considered holding clutches and are contained at the rear of the transaxle case. (Fig. 200).

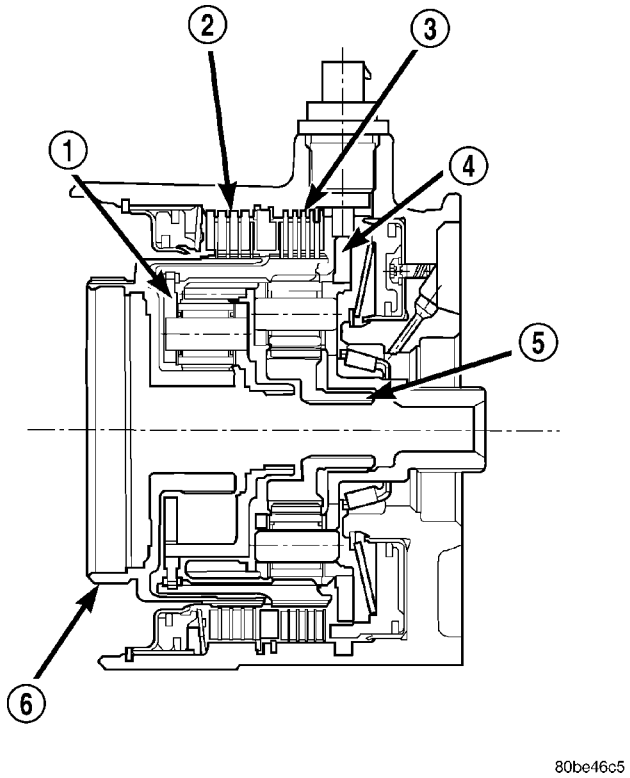

Fig. 200 2/4 and Low/Reverse Clutches

1 - FRONT PLANET CARRIER/REAR ANNULUS
2 - 2/4 CLUTCH
3 - L/R CLUTCH
4 - REAR PLANET CARRIER/FRONT ANNULUS
5 - REAR SUN GEAR
6 - FRONT SUN GEAR ASSEMBLY

OPERATION

NOTE: Refer to the "Elements In Use" chart in Diagnosis and Testing for a collective view of which clutch elements are applied at each position of the selector lever.

2/4 CLUTCH

The 2/4 clutch is hydraulically applied in second and fourth gears by pressurized fluid against the 2/4 clutch piston. When the 2/4 clutch is applied, the front sun gear assembly is held or grounded to the transaxle case.

LOW/REVERSE CLUTCH

The Low/Reverse clutch is hydraulically applied in park, reverse, neutral, and first gears by pressurized fluid against the Low/Reverse clutch piston. When the Low/Reverse clutch is applied, the front planet carrier/rear annulus assembly is held or grounded to the transaxle case.

INPUT CLUTCH ASSEMBLY

DISASSEMBLY

(1) Mount input clutch assembly to Input Clutch Pressure Fixture (Tool 8391).

(2) Tap down reverse clutch reaction plate to release pressure from snap ring (Fig. 201).

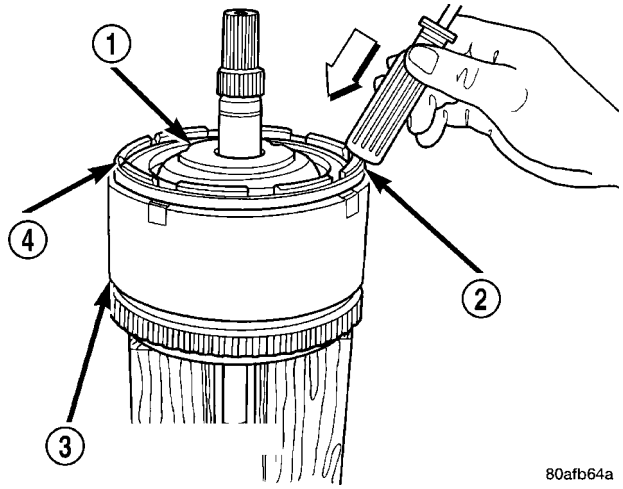

Fig. 201 Tapping Reaction Plate

1 - #4 THRUST PLATE (SELECT)
2 - TAP DOWN REVERSE CLUTCH REACTION PLATE TO REMOVE OR INSTALL SNAP RING
3 - INPUT SHAFT CLUTCHES RETAINER ASSEMBLY
4 - REVERSE CLUTCH REACTION PLATE

INPUT CLUTCH ASSEMBLY (Continued)

(3) Remove reverse clutch snap ring (Fig. 202).

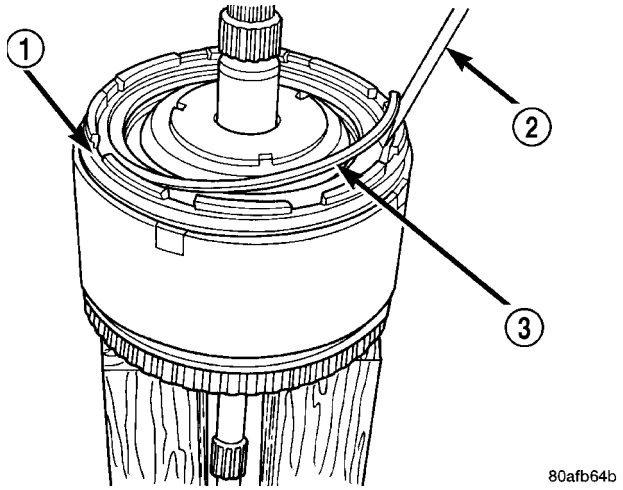

Fig. 202 Reverse Clutch Snap Ring

1 - REACTION PLATE
2 - SCREWDRIVER
3 - REVERSE CLUTCH SNAP RING (SELECT)

(4) Pry up and remove reverse clutch reaction plate (Fig. 203) (Fig. 204).

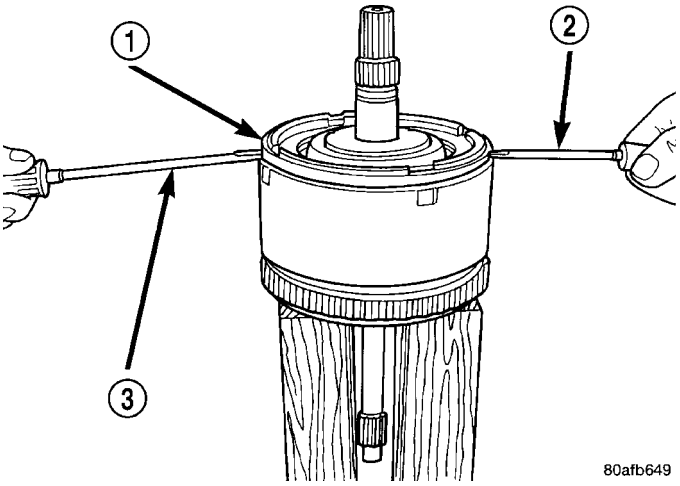

Fig. 203 Pry Reverse Clutch Reaction Plate

1 - REVERSE CLUTCH REACTION PLATE
2 - SCREWDRIVER
3 - SCREWDRIVER

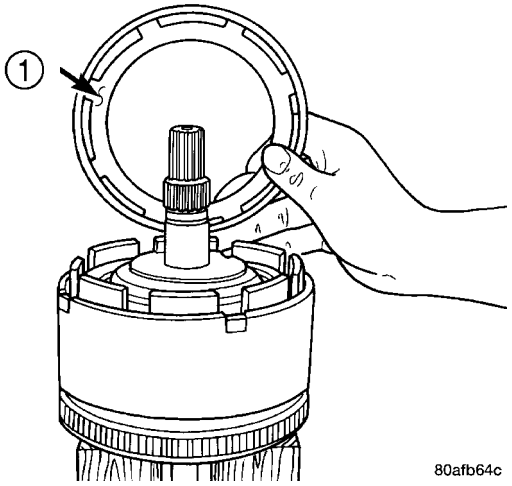

Fig. 204 Reverse Clutch Reaction Plate

1 - REVERSE CLUTCH REACTION PLATE (INSTALL FLAT SIDE DOWN)

(5) Remove the reverse clutch pack (two frictions/ one steel) (Fig. 205).

NOTE: Tag reverse clutch pack for reassembly identification.

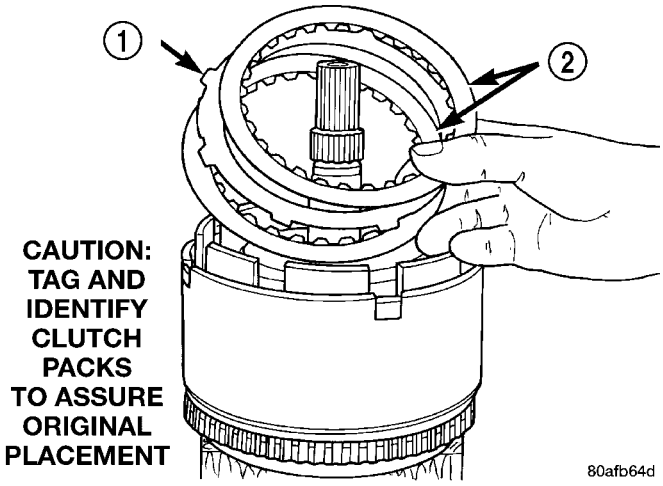

Fig. 205 Reverse Clutch Pack

1 - REVERSE CLUTCH PLATE
2 - REVERSE CLUTCH DISC

INPUT CLUTCH ASSEMBLY (Continued)

(6) Remove the OD/Reverse pressure plate snap ring (Fig. 206).

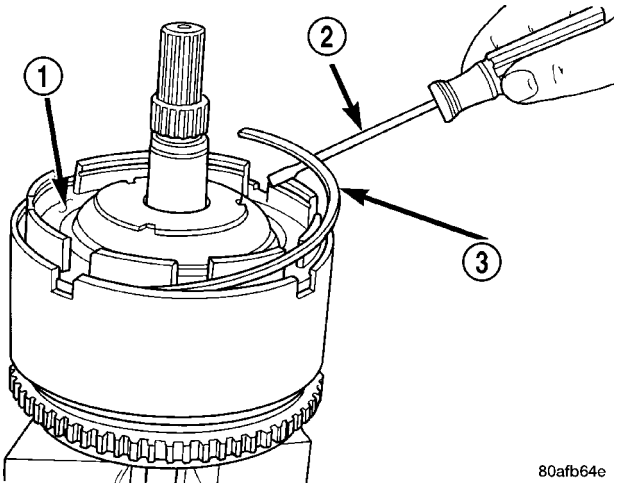

Fig. 206 OD/Reverse Pressure Plate Snap Ring

1 - OD/REVERSE PRESSURE PLATE
2 - SCREWDRIVER
3 - OD/REVERSE PRESSURE PLATE SNAP RING

(7) Remove OD/Reverse pressure plate (Fig. 207).

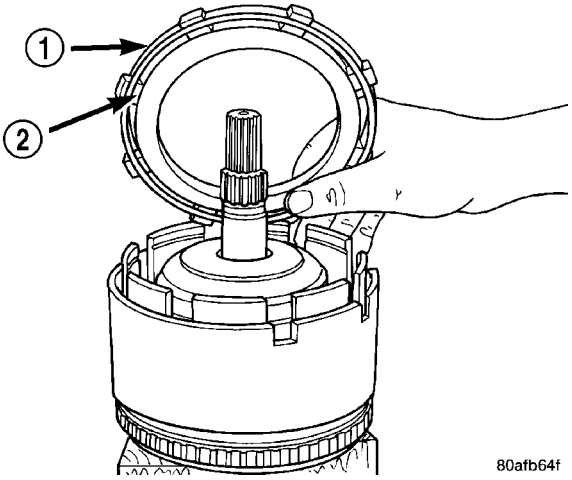

Fig. 207 OD/Reverse Pressure Plate

1 - OD/REVERSE PRESSURE PLATE (STEP SIDE DOWN)
2 - (STEP SIDE DOWN)

(8) Remove OD/Reverse pressure plate wave snap ring (Fig. 208).

(9) Remove OD shaft/hub and OD clutch pack (Fig. 209) (Fig. 210).

NOTE: Tag overdrive clutch pack for reassembly identification.

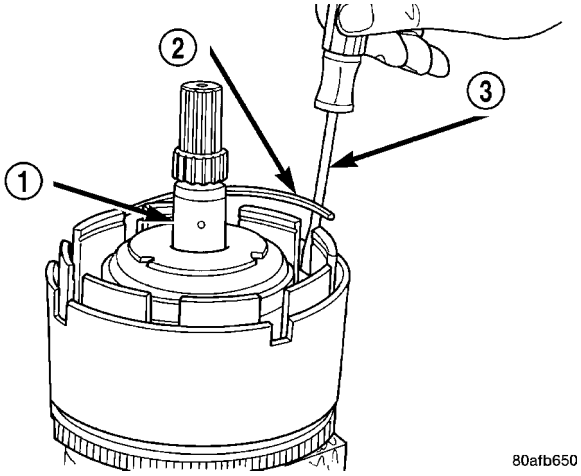

Fig. 208 Waved Snap Ring

1 - OVERDRIVE SHAFT ASSEMBLY
2 - OD/REVERSE CLUTCH WAVED SNAP RING
3 - SCREWDRIVER

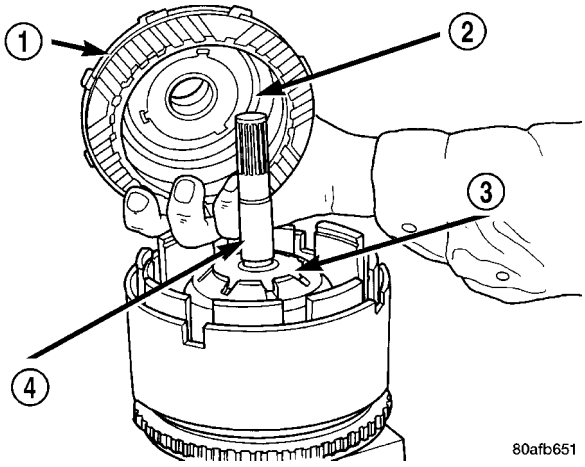

Fig. 209 Remove OD Clutch Pack

1 - OVERDRIVE SHAFT ASSEMBLY AND OD CLUTCH PACK
2 - #3 THRUST PLATE
3 - #3 THRUST WASHER
4 - UNDERDRIVE SHAFT ASSEMBLY

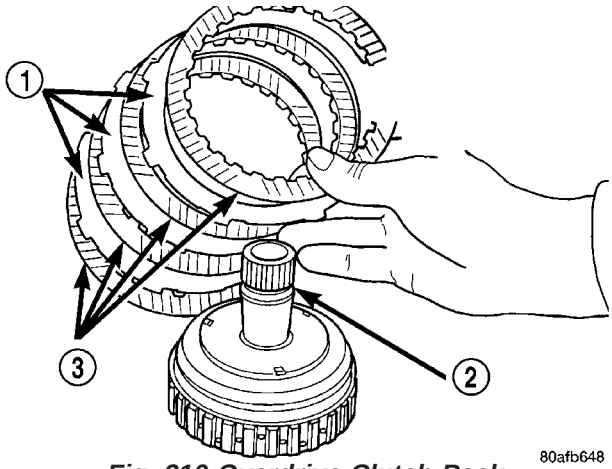

Fig. 210 Overdrive Clutch Pack

1 - OVERDRIVE CLUTCH PLATE
2 - OVERDRIVE SHAFT ASSEMBLY
3 - OVERDRIVE CLUTCH DISC

INPUT CLUTCH ASSEMBLY (Continued)

(10) Remove and inspect #3 & #4 thrust washers (Fig. 211).

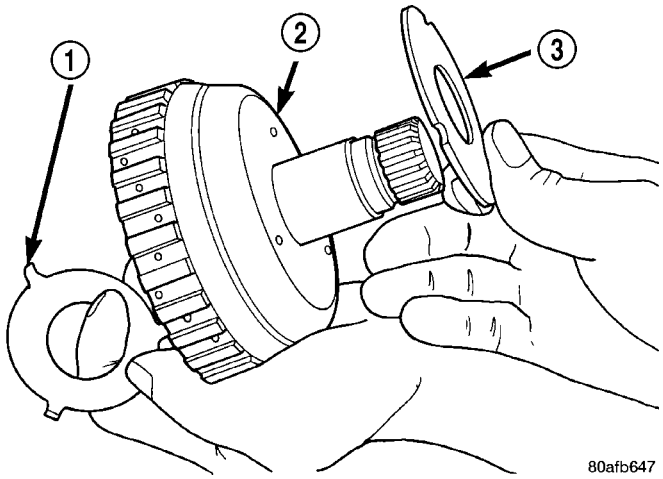

Fig. 211 #3&4 Thrust Washers

1 - #3 THRUST PLATE (3 TABS)
2 - OD SHAFT ASSEMBLY
3 - #4 THRUST PLATE (3 SLOTS)

(11) Remove the underdrive shaft assembly (Fig. 212).

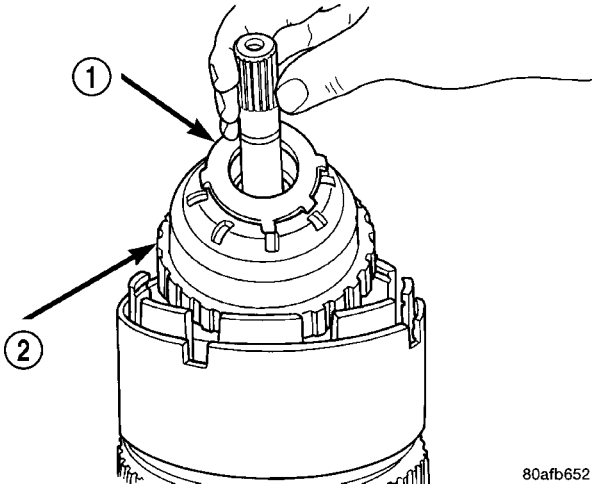

Fig. 212 Underdrive Shaft Assembly

1 - #3 THRUST WASHER (5 TABS)
2 - UNDERDRIVE SHAFT ASSEMBLY

(12) Remove the #2 needle bearing (Fig. 213).

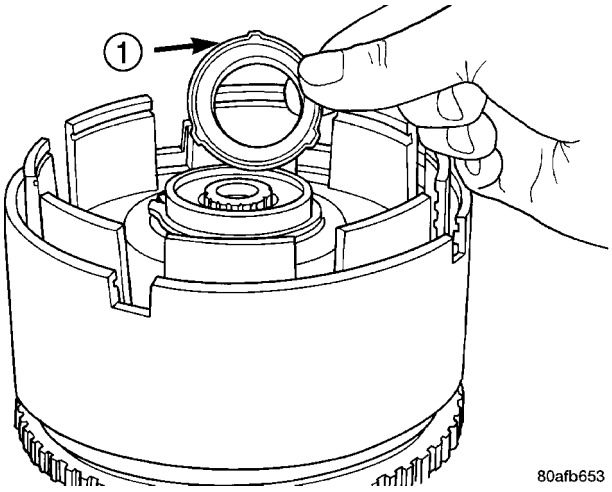

Fig. 213 No. 2 Needle Bearing

1 - #2 NEEDLE BEARING (NOTE 3 TABS)

(13) Remove the OD/UD reaction plate tapered snap ring (Fig. 214).

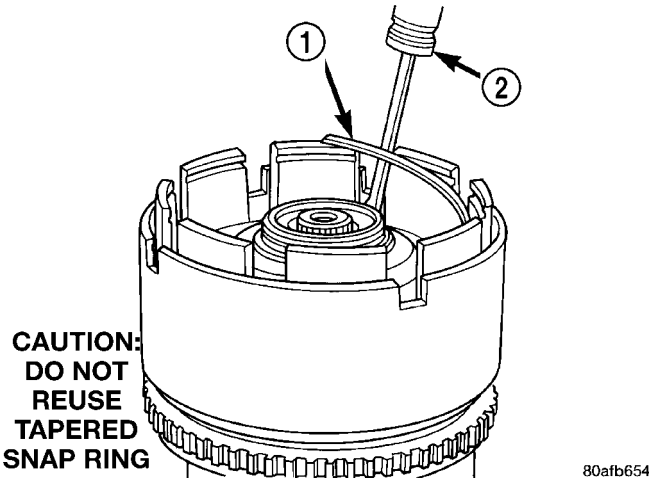

Fig. 214 OD/UD Reaction Plate Tapered Snap Ring

1 - OVERDRIVE/UNDERDRIVE CLUTCHES REACTION PLATE TAPERED SNAP RING
2 - SCREWDRIVER (DO NOT SCRATCH REACTION PLATE)

NOTE: The OD/UD clutch reaction plate has a step on both sides. Install the OD/UD clutches reaction plate tapered step side up.

INPUT CLUTCH ASSEMBLY (Continued)

(14) Remove the OD/UD reaction plate (Fig. 215).

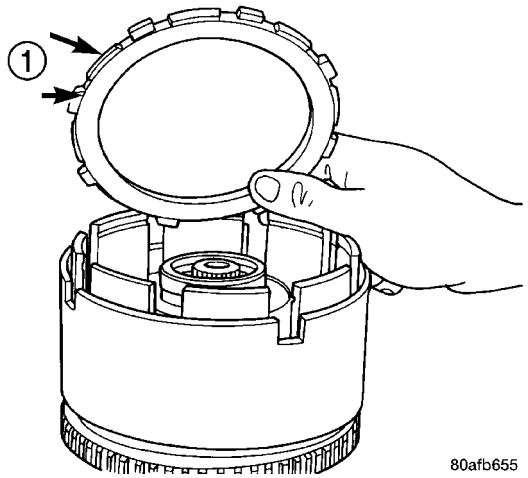

Fig. 215 OD/UD Reaction Plate

1 - OD/UD CLUTCH REACTION PLATE (TAPERED STEP SIDE UP)

(15) Remove the first UD clutch disc (Fig. 216).

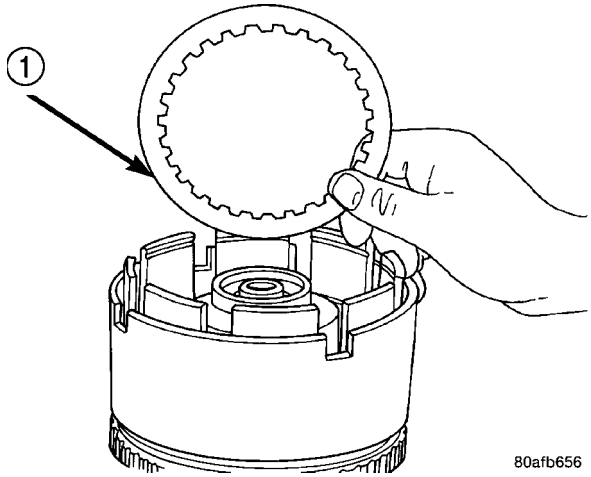

Fig. 216 Remove One UD Clutch Disc

1 - ONE UNDERDRIVE CLUTCH DISC

(16) Remove the UD clutch flat snap ring (Fig. 217).

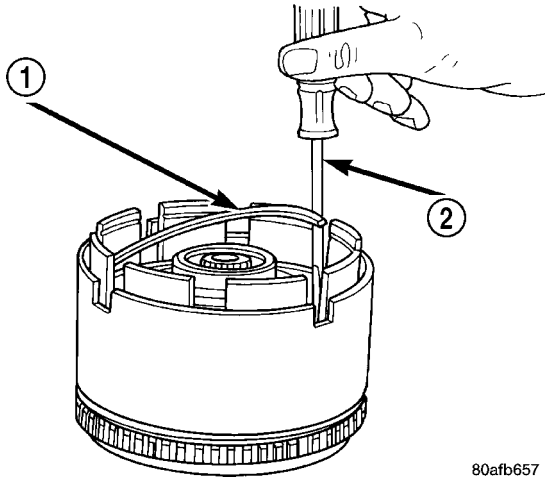

Fig. 217 UD Clutch Flat Snap Ring

1 - UNDERDRIVE CLUTCH REACTION PLATE FLAT SNAP RING
2 - SCREWDRIVER

NOTE: Tag underdrive clutch pack for reassembly identification.

(17) Remove the UD clutch pack (Fig. 218).

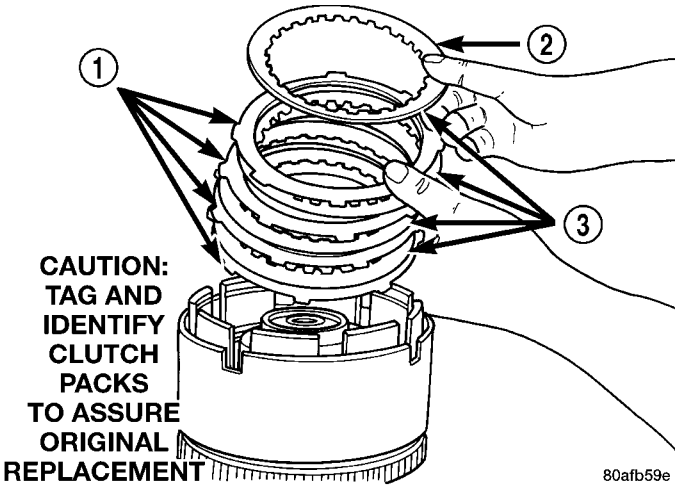

Fig. 218 Underdrive Clutch Pack

1 - CLUTCH PLATE
2 - ONE UD CLUTCH DISC
3 - CLUTCH DISC

INPUT CLUTCH ASSEMBLY (Continued)

CAUTION: Compress return spring just enough to remove or install snap ring.

(18) Using Tool 5059A and an arbor press, compress UD clutch piston enough to remove snap ring (Fig. 219) (Fig. 220).

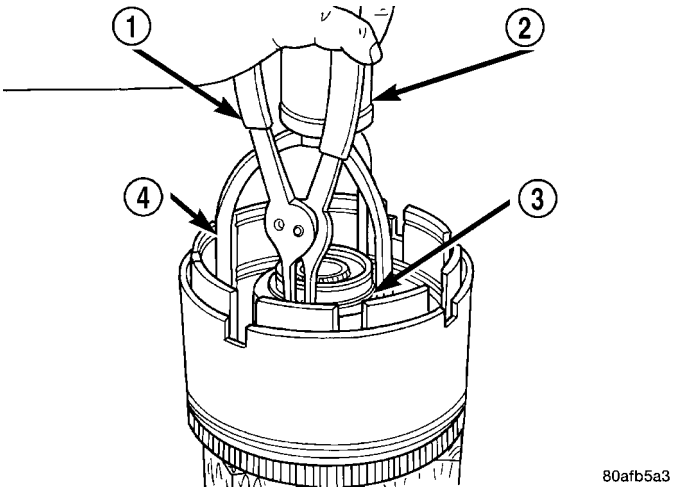

Fig. 219 UD Spring Retainer Snap Ring

1 - SNAP RING PLIERS
2 - ARBOR PRESS RAM
3 - SNAP RING
4 - SPECIAL TOOL 5059A

(19) Remove spring retainer (Fig. 220).

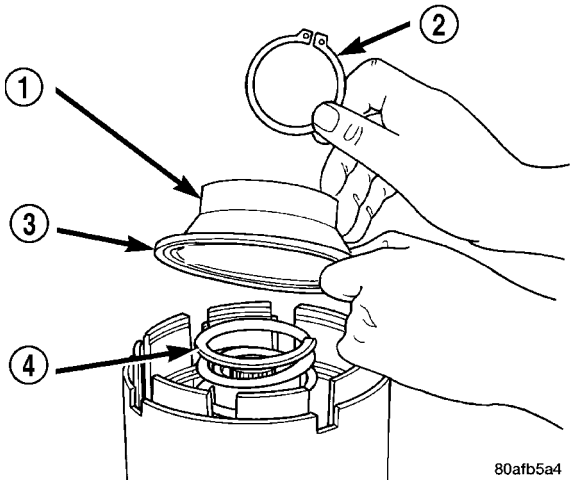

Fig. 220 UD Return Spring and Retainer

1 - UNDERDRIVE SPRING RETAINER
2 - SNAP RING
3 - SEAL
4 - PISTON RETURN SPRING

(20) Remove UD clutch piston (Fig. 221).

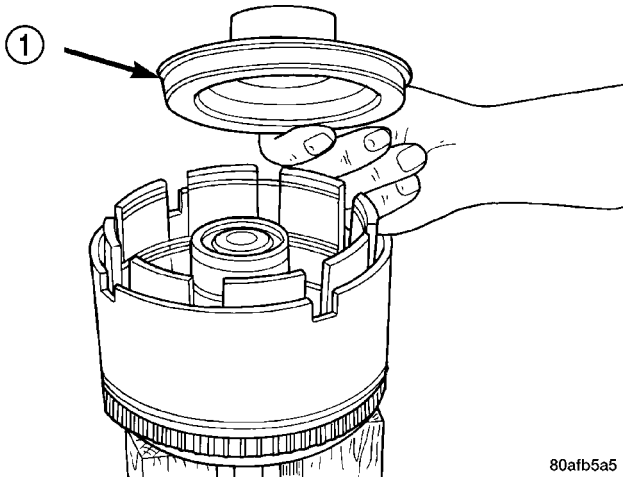

Fig. 221 Underdrive Clutch Piston

1 - PISTON

(21) Remove input hub tapered snap ring (Fig. 222).

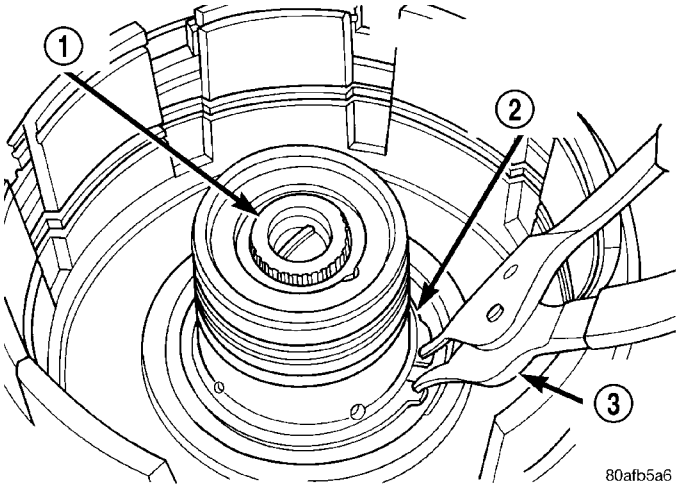

Fig. 222 Input Hub Tapered Snap Ring

1 - INPUT SHAFT
2 - INPUT HUB SNAP RING (TAPERED SIDE UP WITH TABS IN CAVITY)
3 - SNAP RING PLIERS

INPUT CLUTCH ASSEMBLY (Continued)

(22) Tap on input hub with soft faced hammer and separate input hub from OD/Reverse piston and clutch retainer (Fig. 223) (Fig. 224).

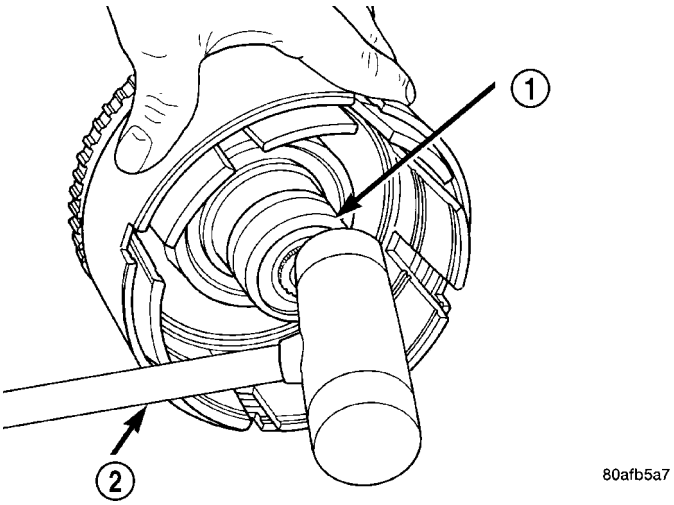

Fig. 223 Tap on Input Hub

1 - INPUT SHAFT AND HUB ASSEMBLY
2 - PLASTIC HAMMER

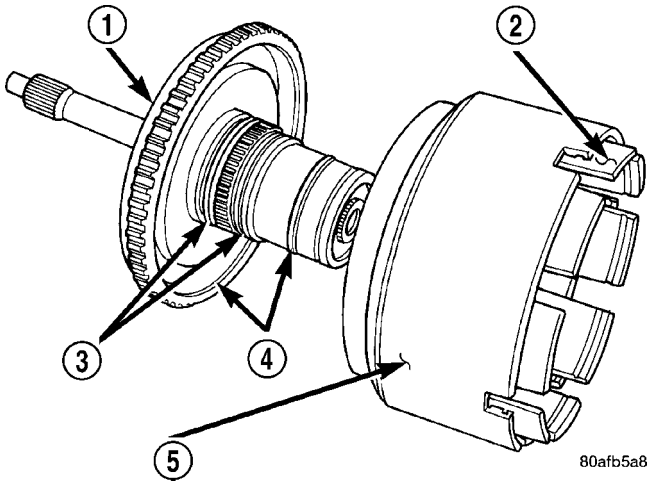

Fig. 224 Input Hub Removed

1 - INPUT SHAFT AND HUB ASSEMBLY
2 - INPUT CLUTCHES RETAINER
3 - O-RING
4 - SEAL
5 - OVERDRIVE/REVERSE PISTON

(23) Separate clutch retainer from OD/Reverse piston (Fig. 225).

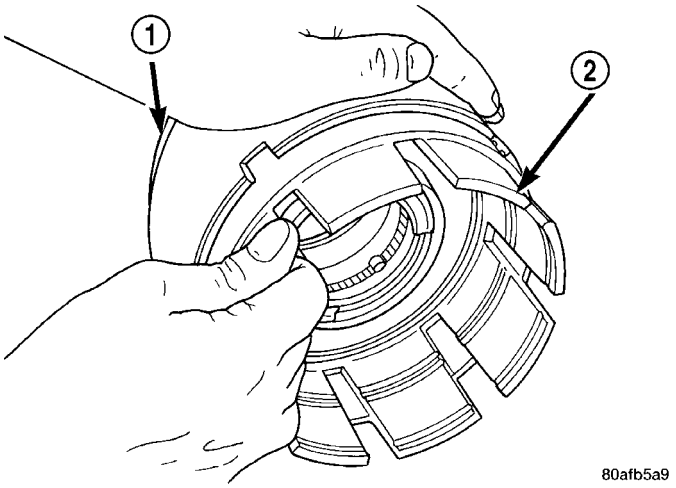

Fig. 225 Pull Retainer from Piston

1 - OVERDRIVE/REVERSE PISTON
2 - INPUT CLUTCHES RETAINER

(24) Using Tool 6057 and an arbor press, compress return OD/Reverse piston return spring just enough to remove snap ring (Fig. 226) (Fig. 227).

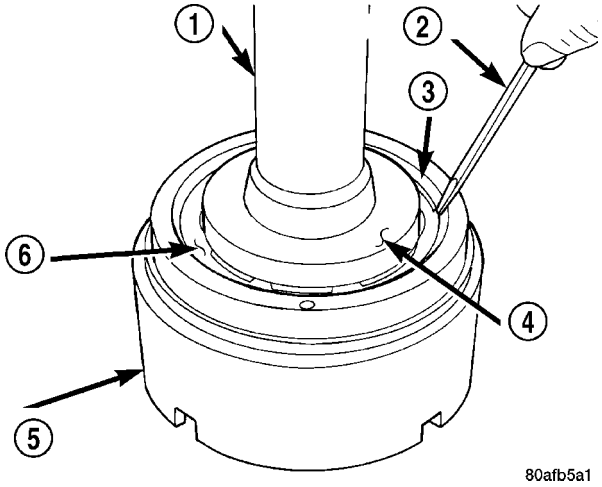

Fig. 226 Remove Snap Ring

1 - ARBOR PRESS RAM (COMPRESS RETURN SPRING JUST ENOUGH TO REMOVE OR INSTALL SNAP RING)
2 - SCREWDRIVER
3 - SNAP RING
4 - SPECIAL TOOL 6057
5 - OD/REVERSE PISTON
6 - RETURN SPRING

INPUT CLUTCH ASSEMBLY (Continued)

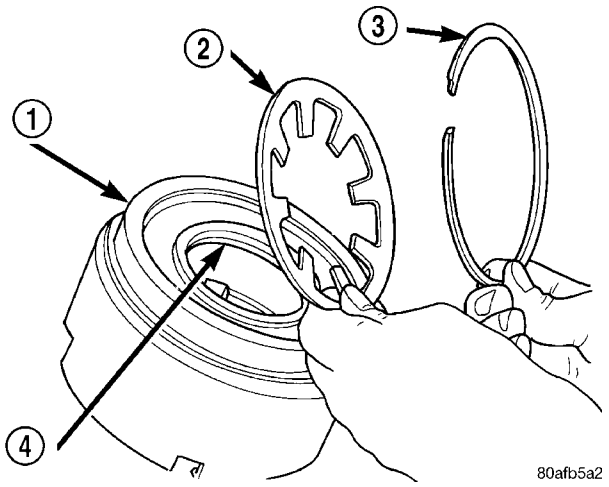

Fig. 227 Snap Ring and Return Spring

1 - OD/REVERSE PISTON
2 - RETURN SPRING
3 - SNAP RING
4 - O-RING

(25) Remove input shaft to input clutch hub snap ring (Fig. 228).

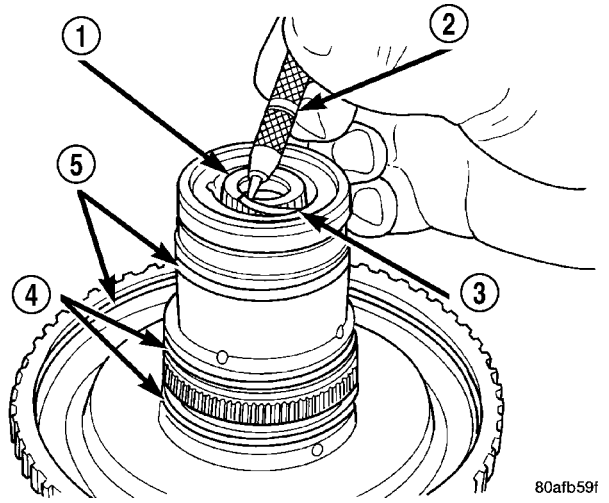

Fig. 228 Remove Input Shaft Snap Ring

1 - INPUT SHAFT
2 - SHARP-POINTED TOOL
3 - SNAP RING
4 - O-RINGS
5 - SEALS

(26) Using a suitably sized socket and an arbor press, remove input shaft from input shaft hub (Fig. 229).

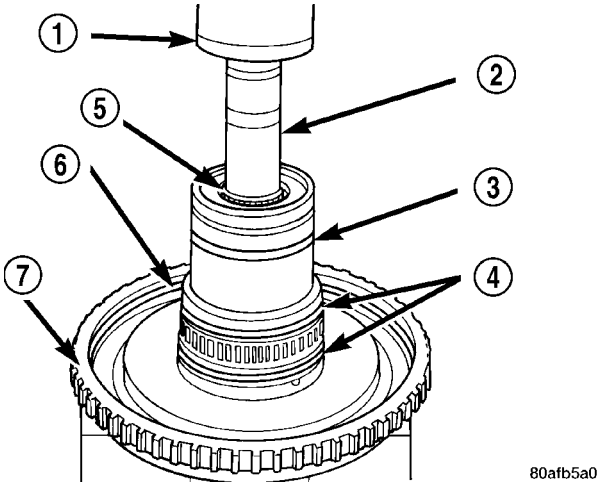

Fig. 229 Remove Input Shaft

1 - ARBOR PRESS RAM
2 - SOCKET
3 - SEAL
4 - O-RINGS
5 - INPUT SHAFT
6 - SEAL
7 - INPUT SHAFT HUB ASSEMBLY

ASSEMBLY

Use petrolatum on all seals to ease assembly of components.

(1) Using an arbor press, install input shaft to input shaft hub (Fig. 230).

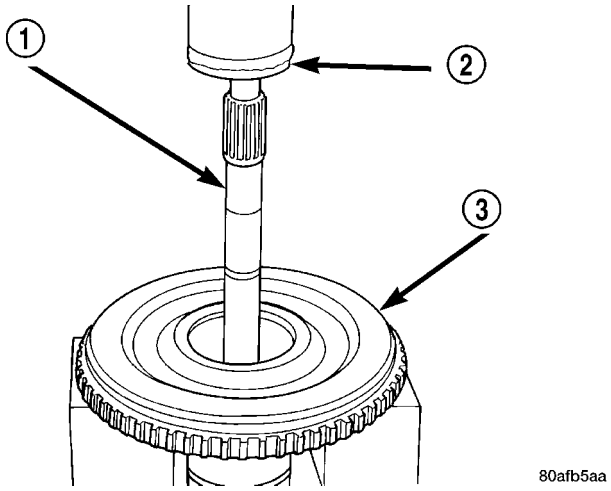

Fig. 230 Install Input Shaft

1 - INPUT SHAFT
2 - ARBOR PRESS RAM
3 - INPUT SHAFT HUB ASSEMBLY

INPUT CLUTCH ASSEMBLY (Continued)

(2) Install input shaft snap ring (Fig. 231).

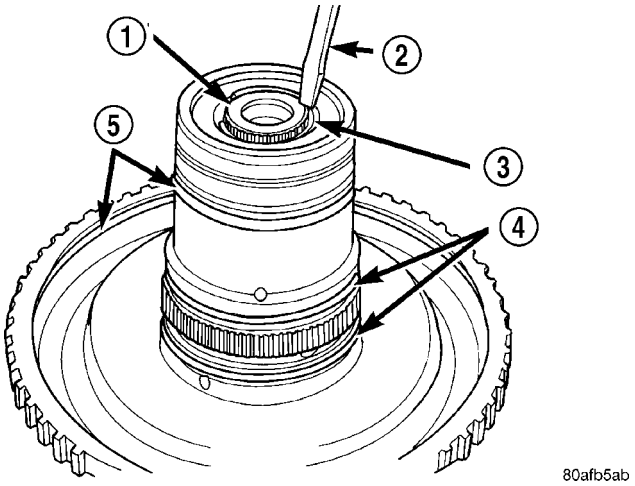

Fig. 231 Install Input Shaft Snap Ring

1 - INPUT SHAFT
2 - SCREWDRIVER (DO NOT SCRATCH BEARING SURFACE)
3 - SNAP RING
4 - O-RINGS
5 - SEALS

(3) Using an arbor press and Tool 6057, Install OD/Reverse piston return spring and snap ring (Fig. 232) (Fig. 233).

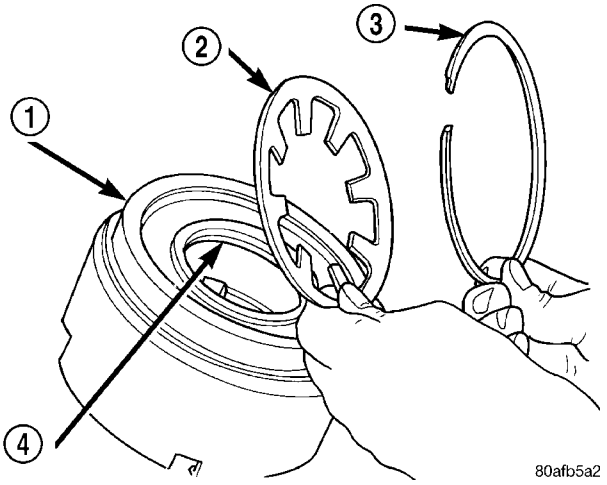

Fig. 232 Return Spring and Snap Ring

1 - OD/REVERSE PISTON
2 - RETURN SPRING
3 - SNAP RING
4 - O-RING

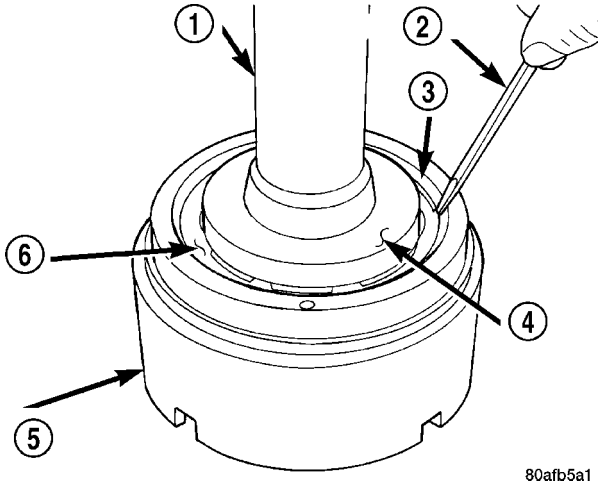

Fig. 233 Install Snap Ring

1 - ARBOR PRESS RAM (COMPRESS RETURN SPRING JUST ENOUGH TO REMOVE OR INSTALL SNAP RING)
2 - SCREWDRIVER
3 - SNAP RING
4 - SPECIAL TOOL 6057
5 - OD/REVERSE PISTON
6 - RETURN SPRING

(4) Install the OD/Reverse piston assembly to the input clutch retainer as shown in (Fig. 234).

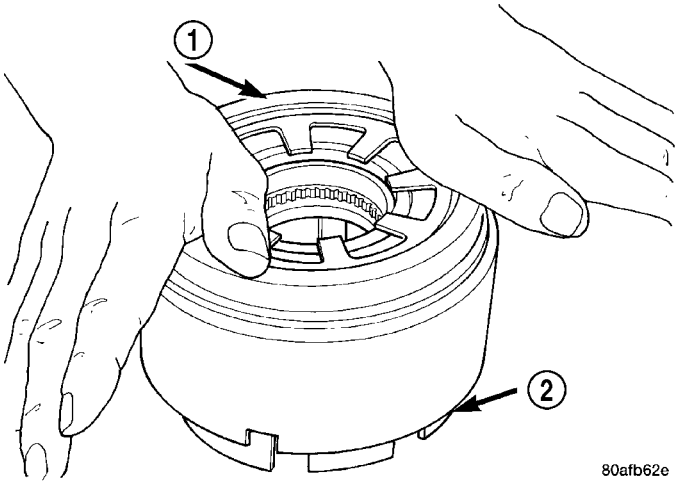

Fig. 234 Install OD/Reverse Piston

1 - PUSH DOWN TO INSTALL OVERDRIVE/REVERSE PISTON
2 - INPUT CLUTCHES RETAINER

INPUT CLUTCH ASSEMBLY (Continued)

(5) Install the input hub/shaft assy. to the OD/Reverse piston/clutch retainer assy. (Fig. 235).

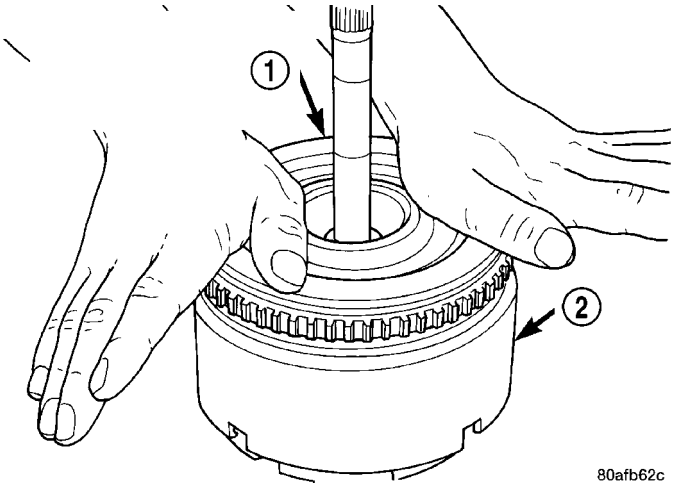

Fig. 235 Install Input Shaft Hub Assembly

1 - PUSH DOWN TO INSTALL INPUT SHAFT HUB ASSEMBLY (ROTATE TO ALIGN SPLINES)
2 - OD/REV. PISTON

(6) Install input hub tapered snap ring (Fig. 236).

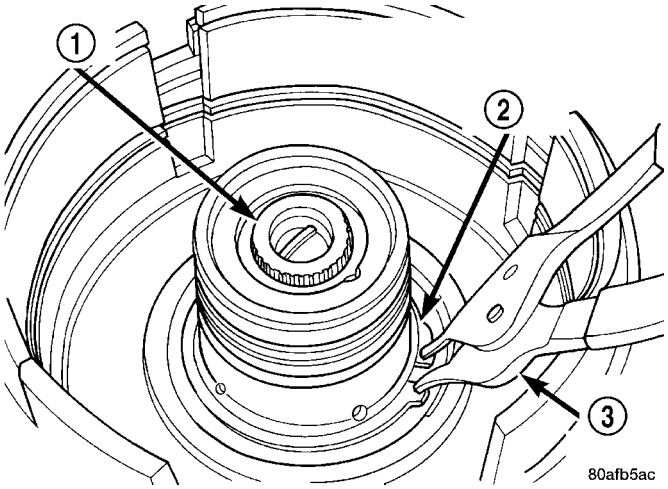

Fig. 236 Install Input Hub Tapered Snap Ring

1 - INPUT SHAFT
2 - INPUT HUB SNAP RING (TAPERED SIDE UP WITH TABS IN CAVITY)
3 - SNAP RING PLIERS

(7) Install UD clutch piston (Fig. 237).

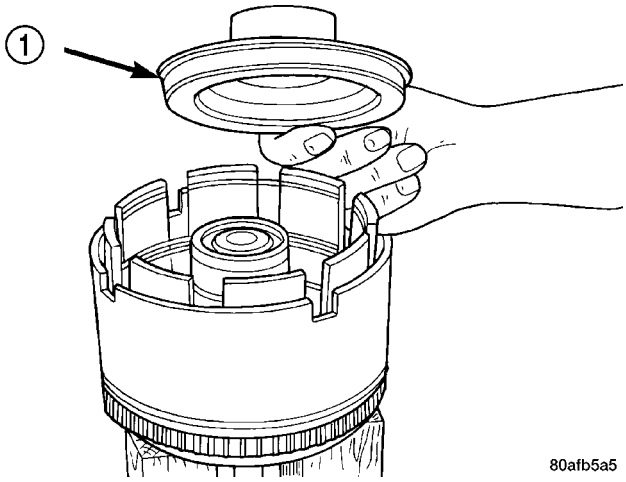

Fig. 237 Underdrive Clutch Piston

1 - PISTON

(8) Install UD piston return spring and Tool 5067 as shown in (Fig. 238).

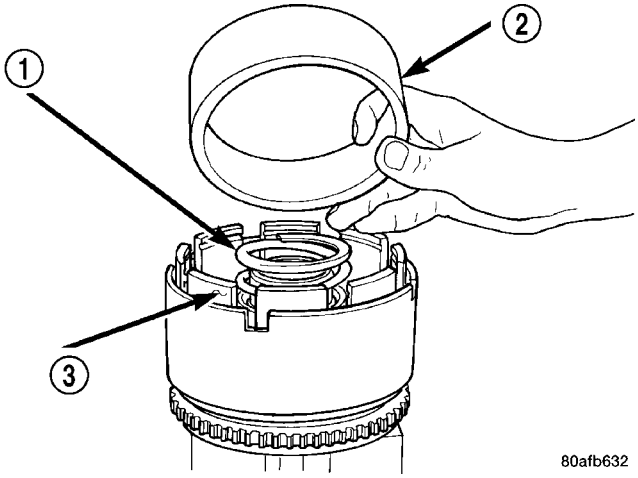

Fig. 238 Seal Compressor Special Tool 5067

1 - PISTON RETURN SPRING
2 - SPECIAL TOOL 5067
3 - INPUT SHAFT CLUTCHES RETAINER ASSEMBLY

INPUT CLUTCH ASSEMBLY (Continued)

(9) Using Tool 5059A and an arbor press, Install the UD spring retainer and snap ring. (Fig. 239) (Fig. 240) Compress just enough to install snap ring.

CAUTION: Compress return spring just enough to install snap ring.

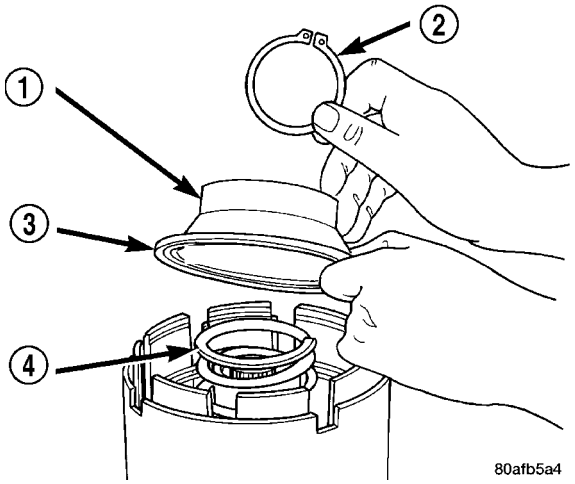

Fig. 239 UD Return Spring and Retainer

1 - UNDERDRIVE SPRING RETAINER
2 - SNAP RING
3 - SEAL
4 - PISTON RETURN SPRING

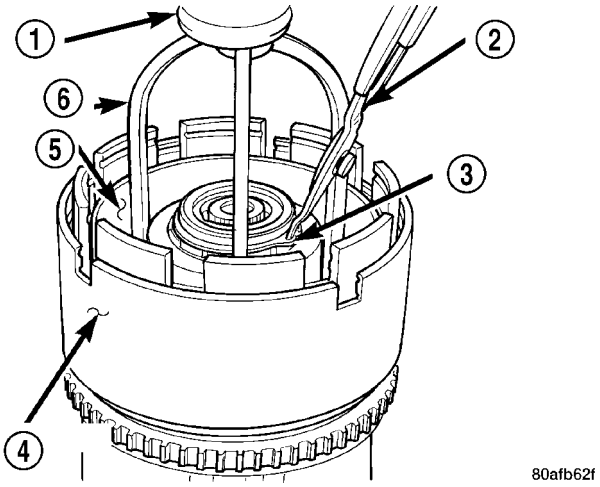

Fig. 240 Install UD Spring Retainer and Snap Ring

1 - ARBOR PRESS RAM
2 - SNAP RING PLIERS
3 - SNAP RING
4 - OD/REVERSE PISTON
5 - TOOL 5067
6 - TOOL 5059A

(10) Install the UD clutch pack. Leave out upper disc, until snap ring is installed (Fig. 241).

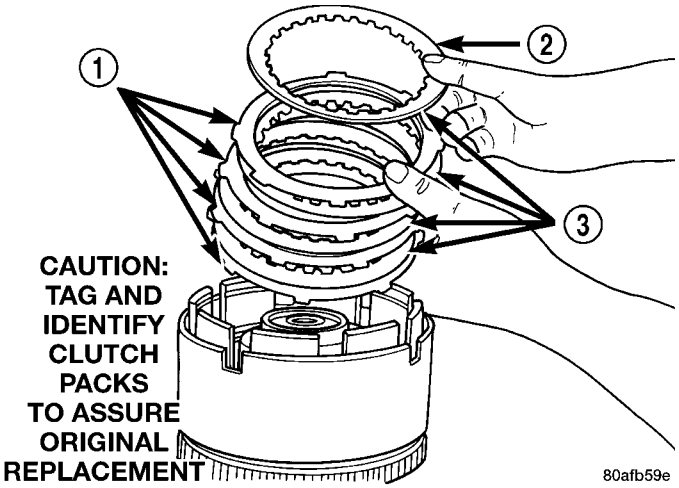

Fig. 241 Underdrive Clutch Pack

1 - CLUTCH PLATE
2 - ONE UD CLUTCH DISC
3 - CLUTCH DISC

(11) Install the UD clutch flat snap ring (Fig. 242).

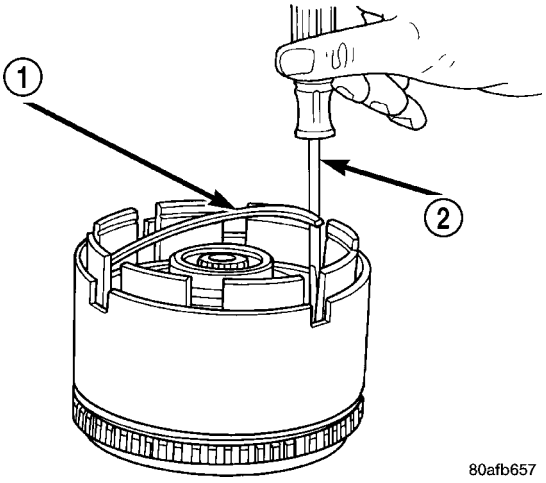

Fig. 242 UD Clutch Flat Snap Ring

1 - UNDERDRIVE CLUTCH REACTION PLATE FLAT SNAP RING
2 - SCREWDRIVER

INPUT CLUTCH ASSEMBLY (Continued)

(12) Install the last UD clutch disc (Fig. 243).

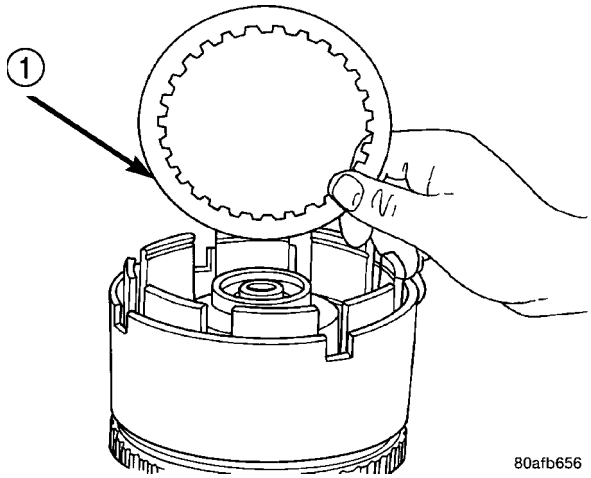

Fig. 243 Install Last UD Clutch Disc

1 - ONE UNDERDRIVE CLUTCH DISC

(13) Install the OD/UD clutch reaction plate and snap ring (Fig. 244) (Fig. 245). The OD/UD clutches reaction plate has a step on both sides. Install the OD/UD clutches reaction plate tapered step side up.

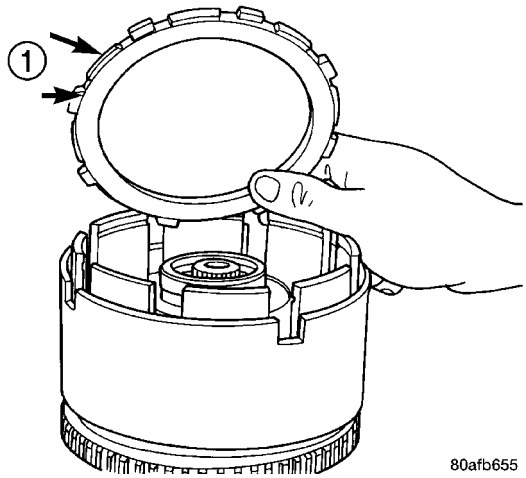

Fig. 244 OD/UD Reaction Plate

1 - OD/UD CLUTCH REACTION PLATE (TAPERED STEP SIDE UP)

NOTE: Snap ring ends must be located within one finger of the input clutch hub. Be sure that snap ring is fully seated, by pushing with screwdriver, into snap ring groove all the way around.

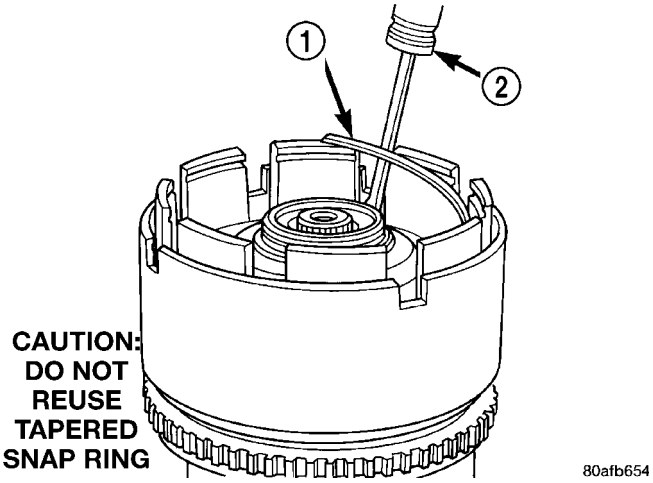

Fig. 245 Tapered Snap Ring

1 - OVERDRIVE/UNDERDRIVE CLUTCHES REACTION PLATE TAPERED SNAP RING
2 - SCREWDRIVER (DO NOT SCRATCH REACTION PLATE)

(14) Seat tapered snap ring to ensure proper installation (Fig. 246).

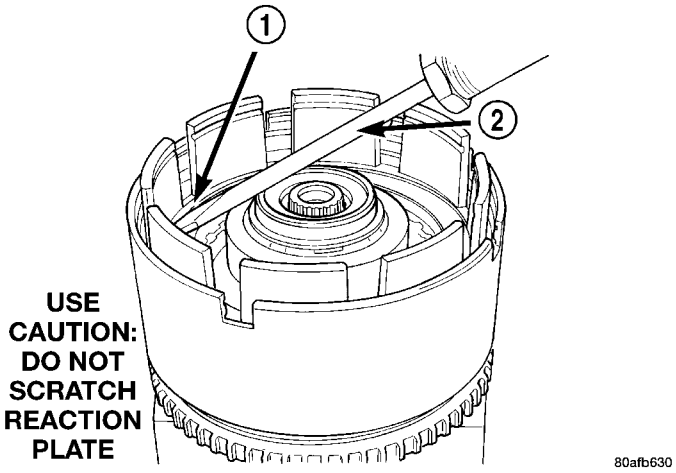

Fig. 246 Seating Tapered Snap Ring

1 - OVERDRIVE/UNDERDRIVE CLUTCHES REACTION PLATE TAPERED SNAP RING
2 - SCREWDRIVER

INPUT CLUTCH ASSEMBLY (Continued)

(15) Install input clutch assembly to the Input Clutch Pressure Fixture–Tool 8391 (Fig. 247).

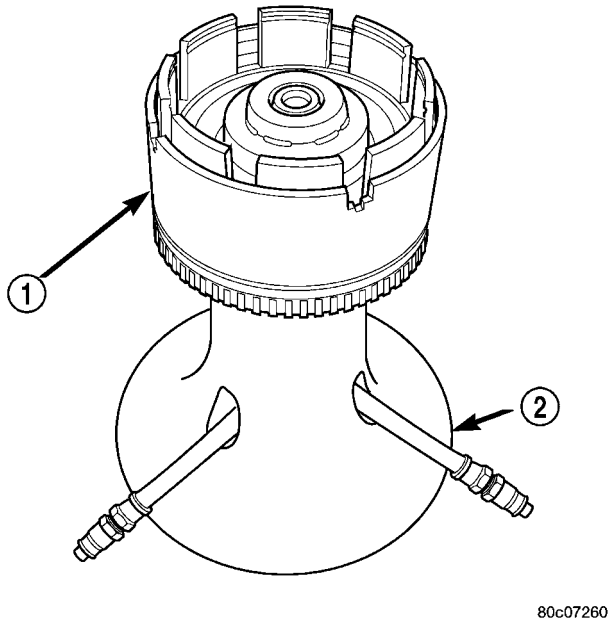

Fig. 247 Input Clutch Assembly on Pressure Fixture Tool 8391

1 - INPUT CLUTCH ASSEMBLY
2 - INPUT CLUTCH PRESSURE FIXTURE 8391

(16) Set up dial indicator on the UD clutch pack as shown in (Fig. 248).

(17) Using moderate pressure, press down and hold (near indicator) the UD clutch pack with screwdriver or suitable tool and zero dial indicator (Fig. 249). When releasing pressure on clutch pack, indicator reading should advance 0.005–0.010.

CAUTION: Do not apply more than 30 psi (206 kPa) to the underdrive clutch pack.

(18) Apply 30 psi (206 kPa) to the underdrive hose on Tool 8391 and measure UD clutch clearance. Measure and record UD clutch pack measurement in four (4) places, 90° apart.

(19) Take average of four measurements and compare with UD clutch pack clearance specification. **Underdrive clutch pack clearance must be 0.94-1.50 mm (0.037-0.059 in.).**

(20) If necessary, select the proper reaction plate to achieve specifications:

UNDERDRIVE REACTION PLATE THICKNESS	
4659939AB	5.837-5.937 mm (0.230-0.234 in.)
4659940AB	6.147-6.248 mm (0.242-0.246 in.)
4659941AB	6.457-6.557 mm (0.254-0.258 in.)

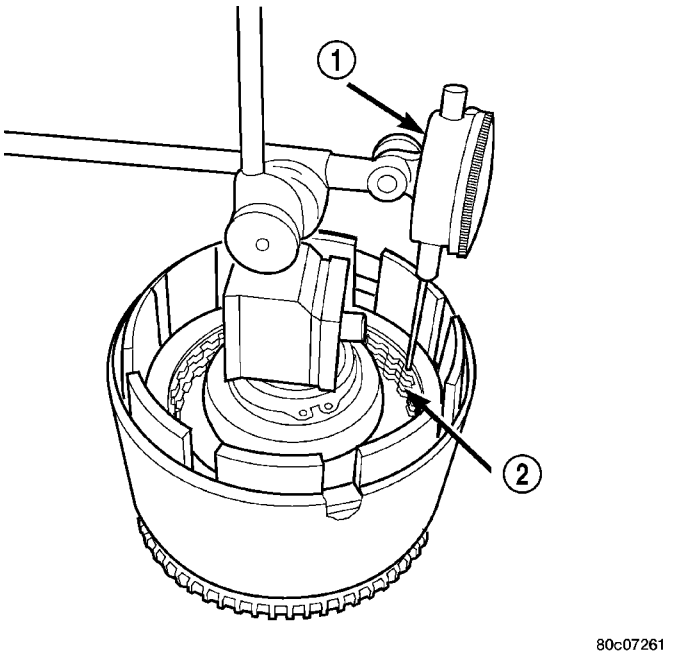

Fig. 248 Set Up Dial Indicator to Measure UD Clutch Clearance

1 - DIAL INDICATOR
2 - UNDERDRIVE CLUTCH

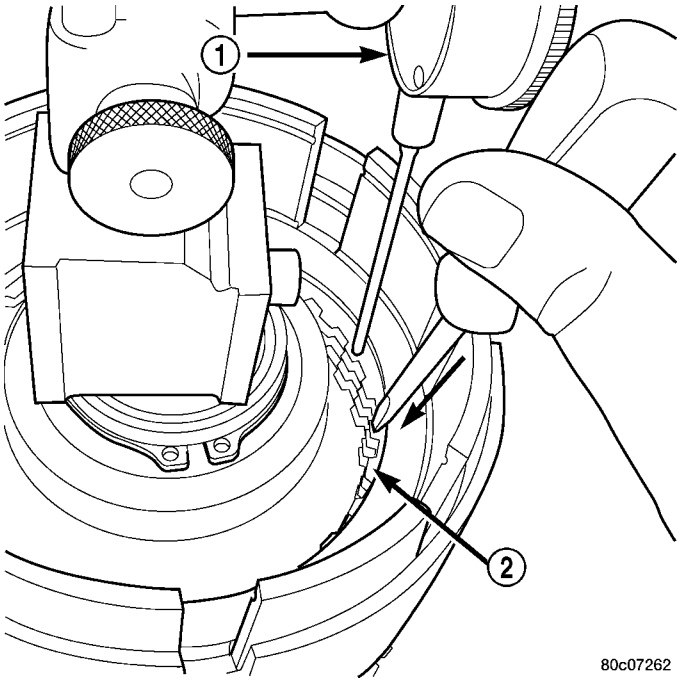

Fig. 249 Press Down on UD Clutch Pack and Zero Dial Indicator

1 - DIAL INDICATOR
2 - UNDERDRIVE CLUTCH

INPUT CLUTCH ASSEMBLY (Continued)

(21) Install the OD clutch pack (four frictions/three steels) (Fig. 250).

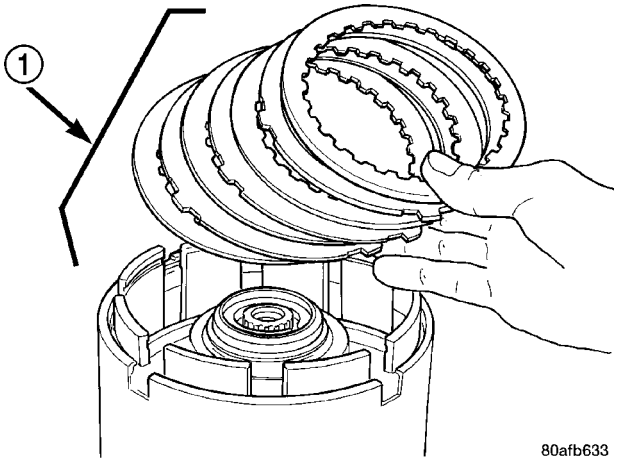

Fig. 250 Install OD Clutch Pack

1 - OVERDRIVE CLUTCH PACK

(22) Install OD pressure plate waved snap ring (Fig. 251).

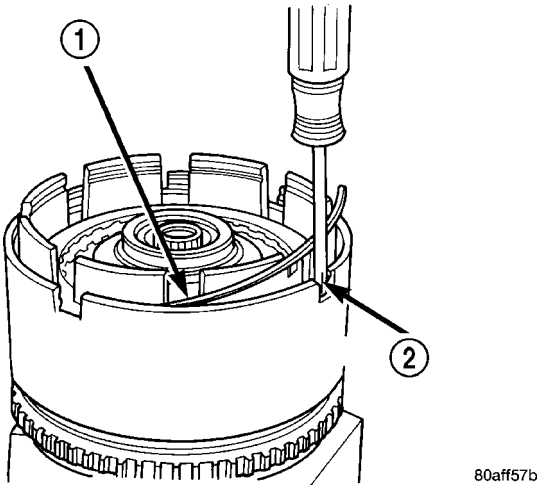

Fig. 251 Install Waved Snap Ring

1 - OVERDRIVE PRESSURE PLATE WAVED SNAP RING
2 - SCREWDRIVER

(23) Install the OD/Reverse pressure plate with large step down (towards OD clutch pack) (Fig. 252).

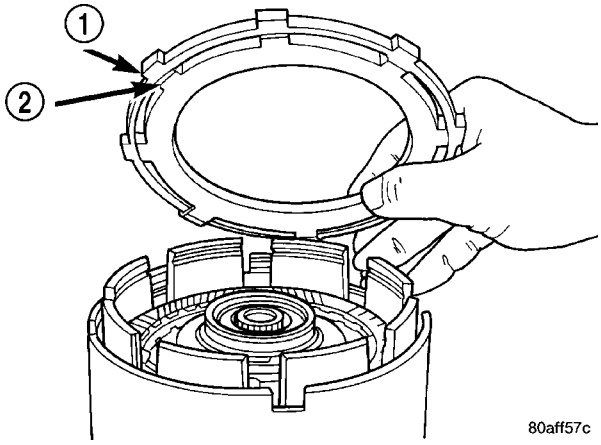

Fig. 252 OD/Reverse Pressure Plate

1 - OVERDRIVE/REVERSE PRESSURE PLATE
2 - (STEP SIDE DOWN)

(24) Install OD pressure plate flat snap ring (Fig. 253).

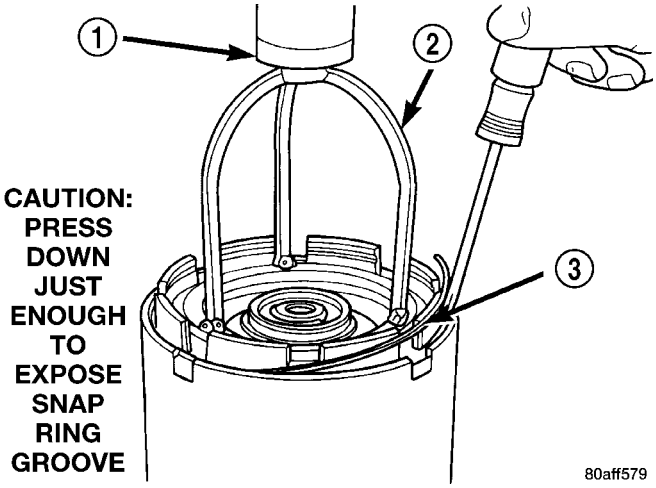

Fig. 253 Install Flat Snap Ring

1 - ARBOR PRESS RAM
2 - TOOL 5059A
3 - FLAT SNAP RING

INPUT CLUTCH ASSEMBLY (Continued)

(25) Measure OD clutch pack clearance. Set up dial indicator on top of the OD/Reverse pressure plate as shown in (Fig. 254).

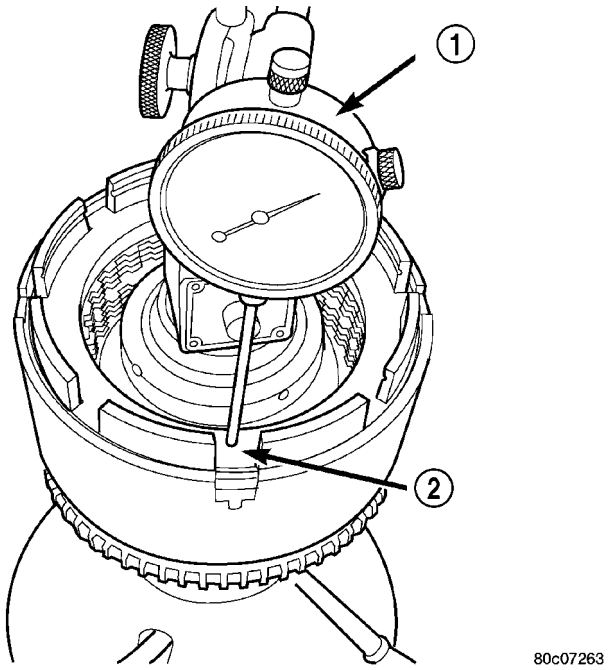

Fig. 254 Measure OD Clutch Pack Clearance

1 - DIAL INDICATOR
2 - OD/REVERSE REACTION PLATE

(26) Zero dial indicator and apply 30 psi (206 kPa) air pressure to the overdrive clutch hose on Tool 8391. Measure and record OD clutch pack measurement in four (4) places, 90° apart.

(27) Take average of four measurements and compare with OD clutch pack clearance specification. **The overdrive (OD) clutch pack clearance is 1.07-3.25 mm (0.042-0.128 in.).**

If not within specifications, the clutch is not assembled properly. There is no adjustment for the OD clutch clearance.

(28) Install reverse clutch pack (two frictions/one steel) (Fig. 255).

(29) Install reverse clutch reaction plate with the flat side down towards reverse clutch (Fig. 256).

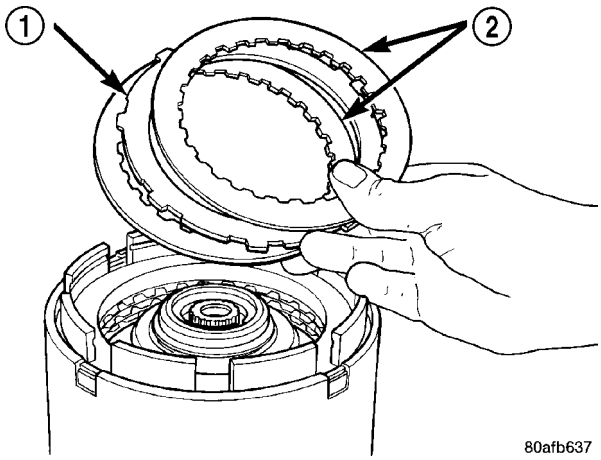

Fig. 255 Install Reverse Clutch Pack

1 - REVERSE CLUTCH PLATE
2 - REVERSE CLUTCH DISCS

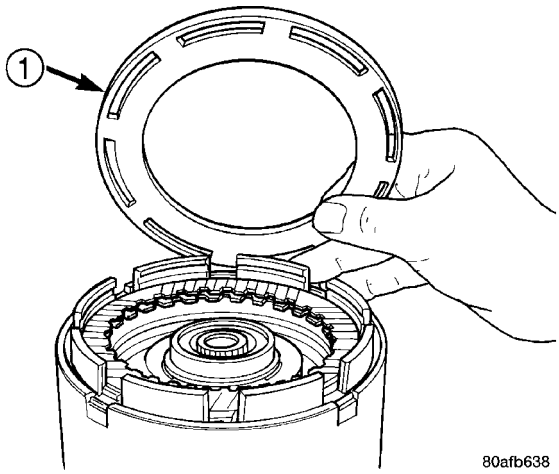

Fig. 256 Install Reaction Plate

1 - REVERSE CLUTCH REACTION PLATE (FLAT SIDE DOWN)

INPUT CLUTCH ASSEMBLY (Continued)

(30) Tap reaction plate down to allow installation of the reverse clutch snap ring. Install reverse clutch snap ring (Fig. 257).

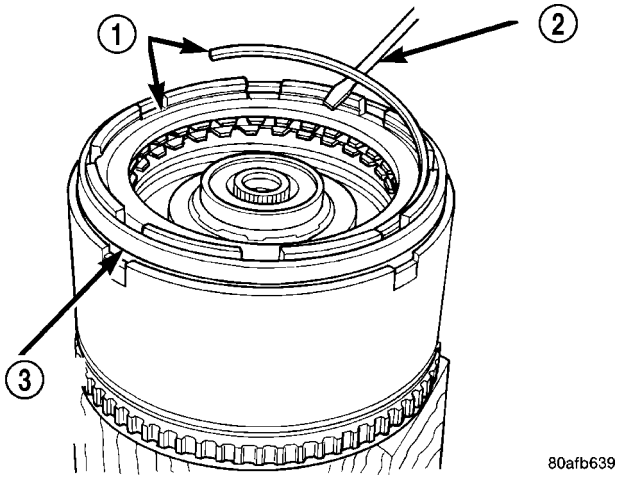

Fig. 257 Install Reverse Clutch Snap Ring

1 - REVERSE CLUTCH SNAP RING (SELECT)
2 - SCREWDRIVER
3 - REVERSE CLUTCH REACTION PLATE

(31) Pry up reverse reaction plate to seat against snap ring (Fig. 258).

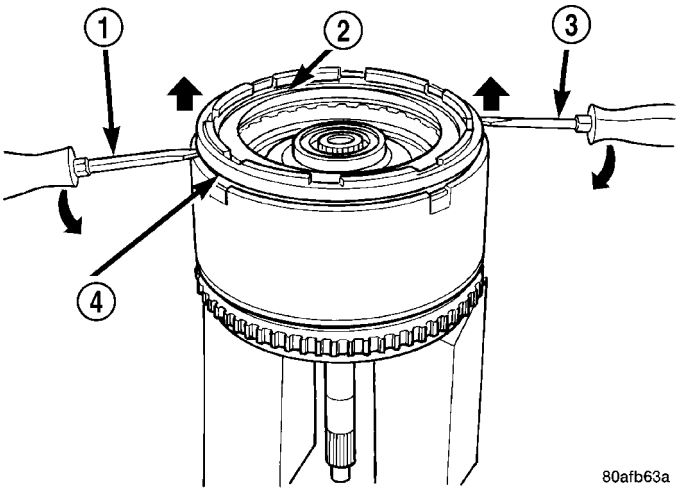

Fig. 258 Pry Up Reaction Plate to Seat Against Snap Ring

1 - SCREWDRIVER
2 - SNAP RING
3 - SCREWDRIVER
4 - MUST RAISE REVERSE REACTION PLATE TO RAISE SNAP RING

(32) Set up a dial indicator on the reverse clutch pack as shown in (Fig. 259).

(33) Using moderate pressure, press down and hold (near indicator) reverse clutch disc with screwdriver or suitable tool and zero dial indicator (Fig. 260). When releasing pressure, indicator should advance 0.005-0.010. as clutch pack relaxes.

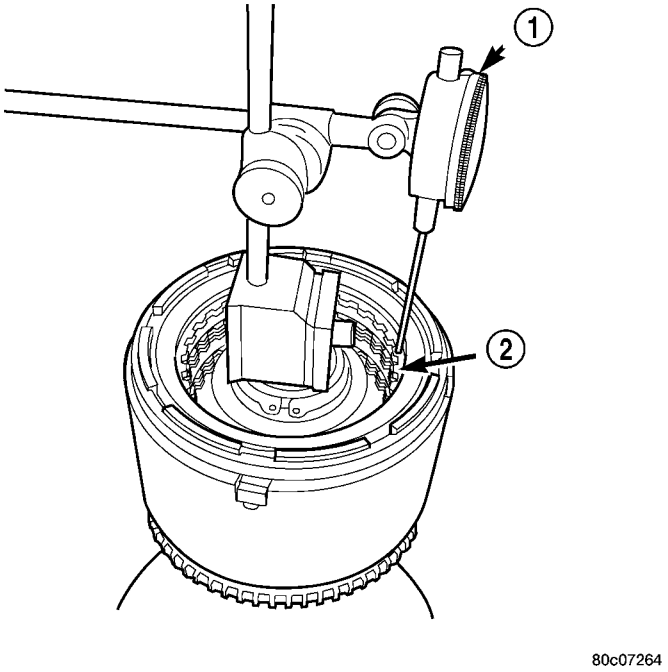

Fig. 259 Measure Reverse Clutch Pack Clearance

1 - DIAL INDICATOR
2 - REVERSE CLUTCH

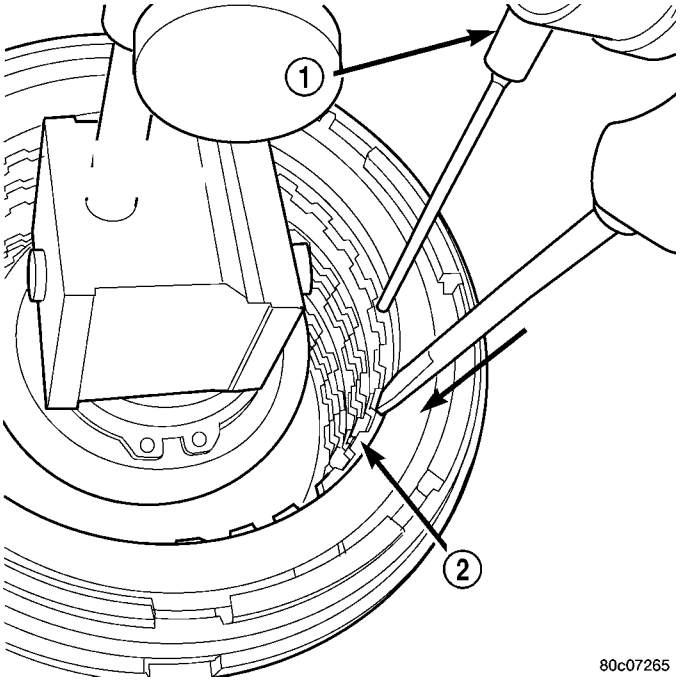

Fig. 260 Press Down on Reverse Clutch and Zero Indicator

1 - DIAL INDICATOR
2 - REVERSE CLUTCH

(34) Apply 30 psi (206 kPa) air pressure to the reverse clutch hose on Tool 8391. Measure and record reverse clutch pack measurement in four (4) places, 90° apart.

INPUT CLUTCH ASSEMBLY (Continued)

(35) Take average of four measurements and compare with reverse clutch pack clearance specification. **The reverse clutch pack clearance is 0.89-1.37 mm (0.035-0.054 in.).** Select the proper reverse clutch snap ring to achieve specifications:

REVERSE CLUTCH SNAP RING THICKNESS	
4377195	1.53-1.58 mm (0.060-0.062 in.)
4412871	1.77-1.83 mm (0.070-0.072 in.)
4412872	2.02-2.07 mm (0.080-0.082 in.)
4412873	2.27-2.32 mm (0.090-0.091 in.)

(36) To complete the assembly, reverse clutch and overdrive clutch must be removed.

(37) Install the #2 needle bearing (Fig. 261).

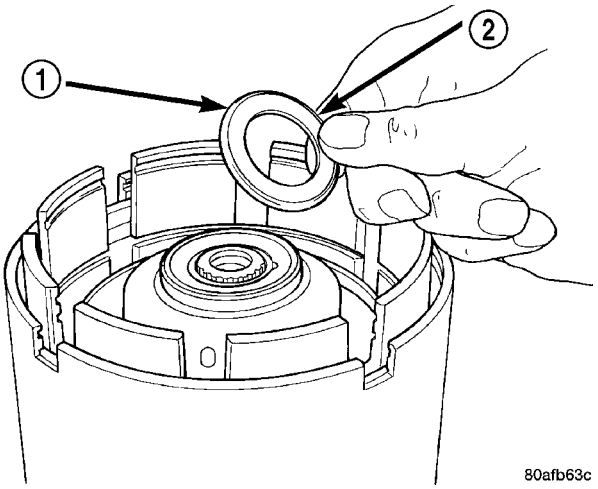

Fig. 261 Install No. 2 Needle Bearing

1 - #2 NEEDLE BEARING (NOTE 3 SMALL TABS)
2 - TABS UP

(38) Install the underdrive shaft assembly (Fig. 262).

(39) Install the #3 thrust washer to the underdrive shaft assembly. Be sure five tabs are seated properly (Fig. 263).

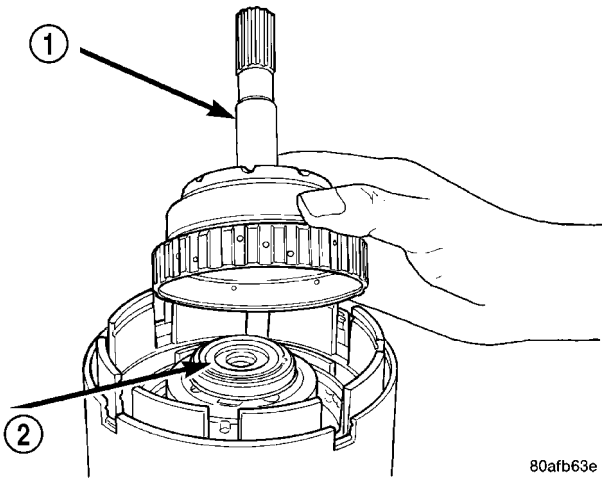

Fig. 262 Install Underdrive Shaft Assembly

1 - UNDERDRIVE SHAFT ASSEMBLY
2 - #2 NEEDLE BEARING

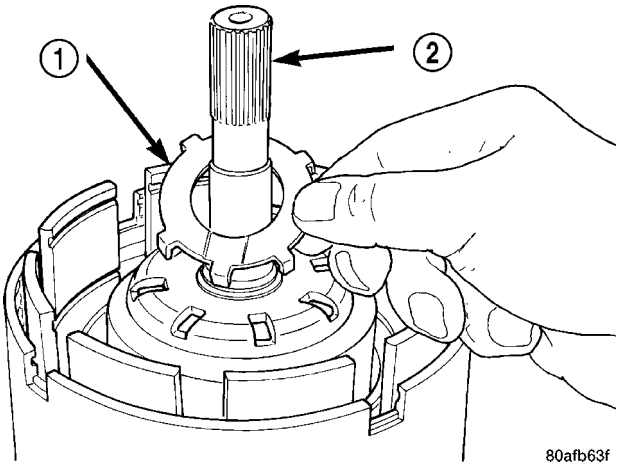

Fig. 263 Install No. 3 Thrust Washer

1 - #3 THRUST WASHER (NOTE 5 TABS)
2 - UNDERDRIVE SHAFT ASSEMBLY

INPUT CLUTCH ASSEMBLY (Continued)

(40) Install the #3 thrust plate to the bottom of the overdrive shaft assembly. Retain with petrolatum or transmission assembly gel (Fig. 264).

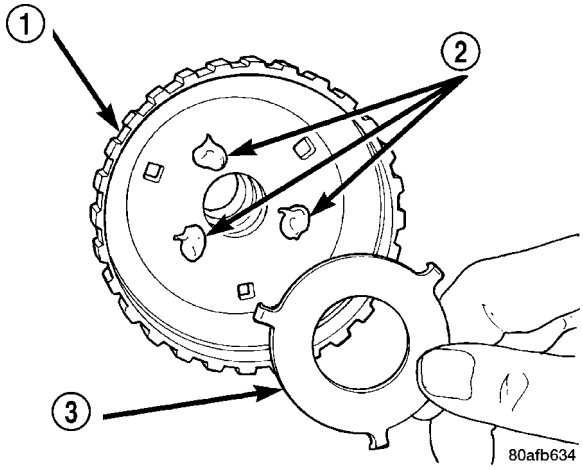

Fig. 264 Install No. 3 Thrust Plate

1 - OVERDRIVE SHAFT ASSEMBLY
2 - DABS OF PETROLATUM (FOR RETENTION)
3 - #3 THRUST PLATE (NOTE 3 TABS)

(41) Install the overdrive shaft assembly (Fig. 265).

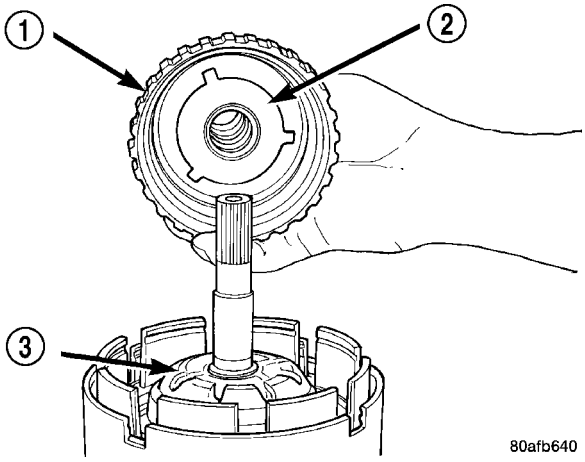

Fig. 265 Install Overdrive Shaft Assembly

1 - OVERDRIVE SHAFT ASSEMBLY
2 - #3 THRUST PLATE
3 - #3 THRUST WASHER

(42) Reinstall overdrive and reverse clutch as shown. **Rechecking these clutch clearances is not necessary.**

OIL PUMP

DESCRIPTION

The oil pump is located in the pump housing inside the bell housing of the transaxle case (Fig. 266). The oil pump consists of an inner and outer gear, a housing, and a cover that also serves as the reaction shaft support.

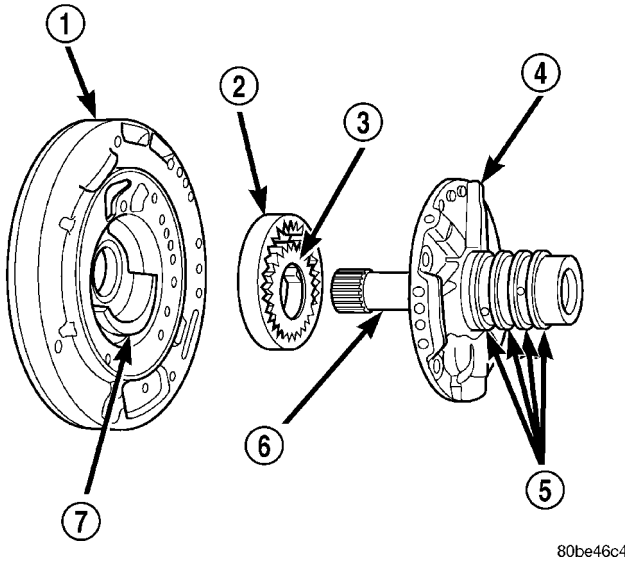

Fig. 266 Oil Pump Assembly

1 - PUMP HOUSING
2 - OUTER PUMP GEAR
3 - INNER PUMP GEAR
4 - REACTION SHAFT SUPPORT
5 - SEAL RINGS (4)
6 - REACTION SHAFT
7 - CRESCENT

OPERATION

As the torque converter rotates, the converter hub rotates the inner and outer gears. As the gears rotate, the clearance between the gear teeth increases in the crescent area, and creates a suction at the inlet side of the pump. This suction draws fluid through the pump inlet from the oil pan. As the clearance between the gear teeth in the crescent area decreases, it forces pressurized fluid into the pump outlet and to the valve body.

STANDARD PROCEDURE - OIL PUMP VOLUME CHECK

Measuring oil pump output volume will determine if sufficient flow to the transmission oil cooler exists, and whether or not an internal transmission failure is present.

Verify that transmission fluid is at the proper level. If adding fluid is necessary, fill to the proper level with Mopar® ATF+4 (Automatic Transmission

OIL PUMP (Continued)

Fluid–Type 9602). The following procedure is to check oil pump output volume:

(1) Using hose cutters or a suitable blade, cut the “to cooler” (Fig. 267) line off flush with the cooler inlet fitting and place a collection container under the open line.

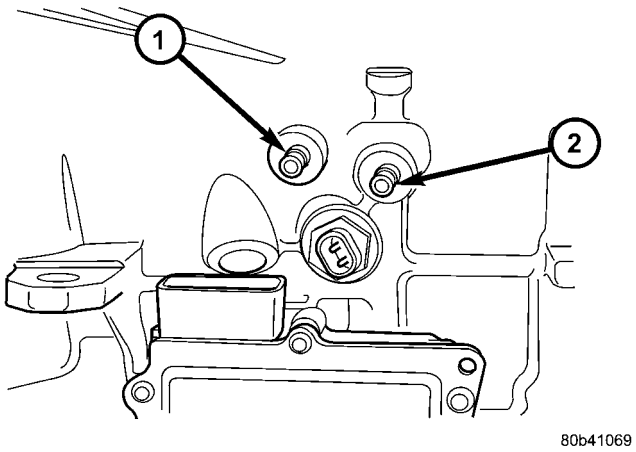

Fig. 267 Transaxle Oil Cooler Fittings

1 - FROM COOLER
2 - TO COOLER

CAUTION: With the fluid set at the proper level, fluid collection should not exceed (1) quart or internal damage to the transmission may occur.

(2) Start engine and run **at curb idle speed**, with the shift selector in neutral.

(3) If one quart of ATF is collected in 20 seconds or less, flow is within acceptable limits. If fluid flow is intermittent or it takes more than 20 seconds to collect one quart of ATF, (Refer to 21 - TRANSMISSION/TRANSAXLE/AUTOMATIC - 41TE - DIAGNOSIS AND TESTING).

(4) Inspect the cooler hose for damage. Replace if necessary.

(5) Re-connect the to cooler line to the transmission using a service splice kit. Refer to instructions inclued with the kit.

(6) Refill the transaxle to proper level with Mopar® ATF+4 (Automatic Transmission Fluid–Type 9602).

DISASSEMBLY

When disassembling the transaxle it is necessary to inspect the oil pump for wear and damage.

(1) Remove the reaction shaft support bolts.

(2) Remove reaction shaft support from pump housing (Fig. 268).

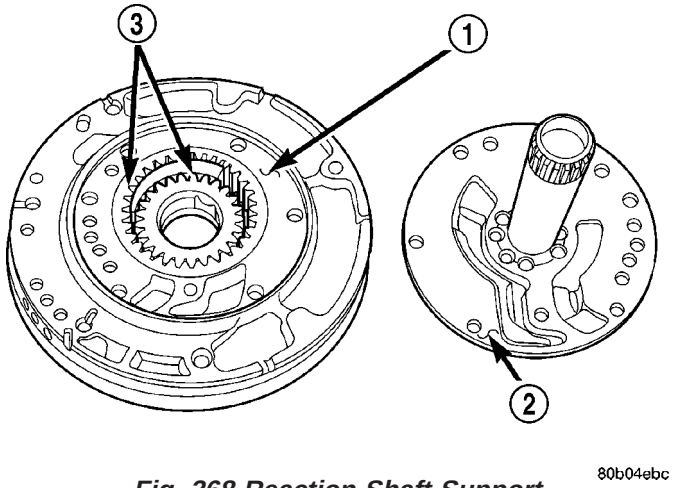

Fig. 268 Reaction Shaft Support

1 - PUMP HOUSING
2 - REACTION SHAFT SUPPORT
3 - PUMP GEARS

(3) Remove the pump gears (Fig. 269) and check for wear and damage on pump housing and gears.

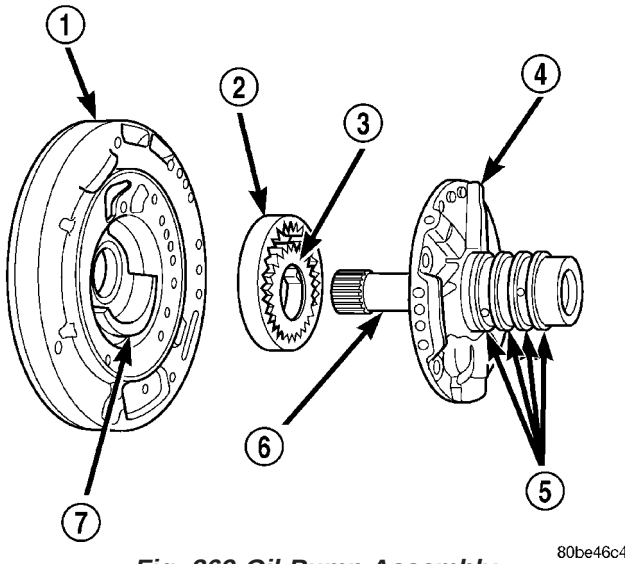

Fig. 269 Oil Pump Assembly

1 - PUMP HOUSING
2 - OUTER PUMP GEAR
3 - INNER PUMP GEAR
4 - REACTION SHAFT SUPPORT
5 - SEAL RINGS (4)
6 - REACTION SHAFT
7 - CRESCENT

(4) Re-install the gears and check clearances.

OIL PUMP (Continued)

(5) Measure the clearance between the outer gear and the pump pocket (Fig. 270). Clearance should be 0.089–0.202 mm (0.0035-0.0079 in.).

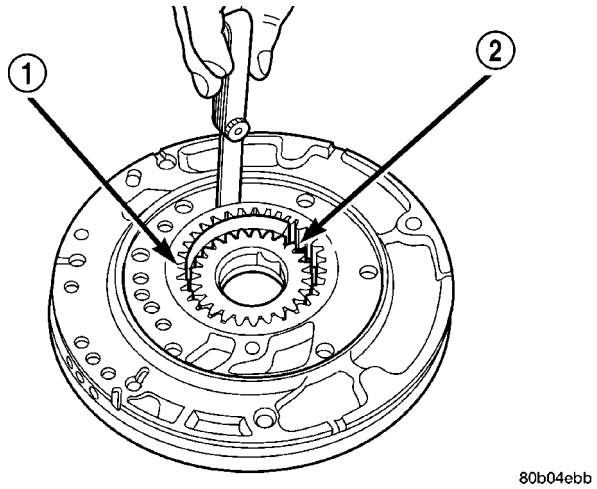

Fig. 270 Measure Outer Gear to Pocket

1 - OUTER GEAR
2 - POCKET

(6) Measure clearance between outer gear and crescent. Clearance should be 0.060-0.298 mm (0.0023-0.0117 in.).

(7) Measure clearance between inner gear and crescent. Clearance should be 0.093-0.385 mm (0.0036-0.0151 in.).

(8) Position an appropriate piece of Plastigage across both pump gears.

(9) Align the Plastigage to a flat area on the reaction shaft support housing.

(10) Install the reaction shaft to the pump housing. Tighten the bolts to 27 N·m (20 ft. lbs.).

(11) Remove bolts and carefully separate the housings. Measure the Plastigage following the instructions supplied.

(12) Clearance between outer gear side and the reaction shaft support should be 0.020-0.046 mm (0.0008-0.0018 in.). Clearance between inner gear side and the reaction shaft support should be 0.020-0.046 mm (0.0008-0.0018 in.).

ASSEMBLY

(1) Assemble oil pump as shown in (Fig. 271)

(2) Install and torque reaction shaft support-to-oil pump housing bolts to 28 N·m (20 ft. lbs.) torque.

PLANETARY GEARTRAIN

DESCRIPTION

The planetary geartrain is located between the input clutch assembly and the rear of the transaxle case. The planetary geartrain consists of two sun gears, two planetary carriers, two annulus (ring) gears, and one output shaft (Fig. 272).

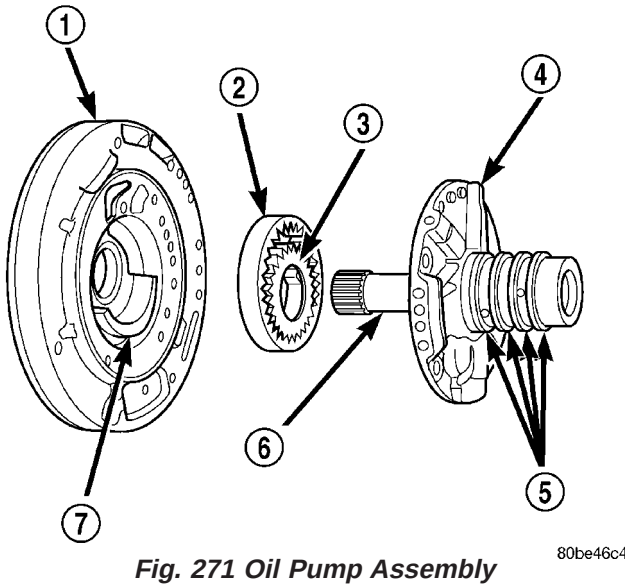

Fig. 271 Oil Pump Assembly

1 - PUMP HOUSING
2 - OUTER PUMP GEAR
3 - INNER PUMP GEAR
4 - REACTION SHAFT SUPPORT
5 - SEAL RINGS (4)
6 - REACTION SHAFT
7 - CRESCENT

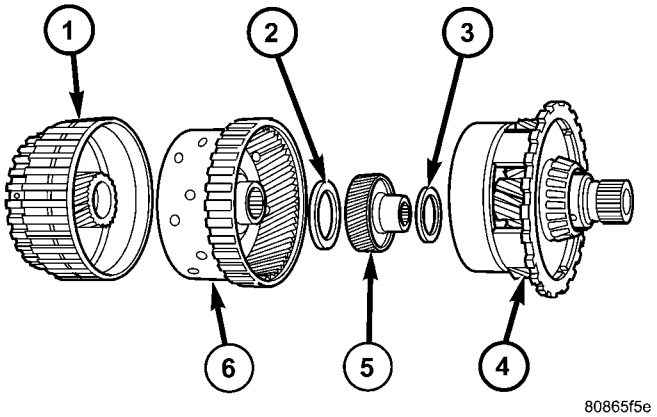

Fig. 272 Planetary Geartrain

1 - FRONT SUN GEAR ASSEMBLY
2 - #6 THRUST BEARING
3 - #7 THRUST BEARING
4 - REAR CARRIER/FRONT ANNULUS ASSEMBLY
5 - REAR SUN GEAR
6 - FRONT CARRIER/REAR ANNULUS ASSEMBLY

OPERATION

The planetary geartrain utilizes two planetary gear sets that connect the transmission input shaft to the output shaft. Input and holding clutches drive or lock different planetary members to change output ratio or direction.

SEAL - OIL PUMP

REMOVAL

(1) Remove transaxle from vehicle (Refer to 21 - TRANSMISSION/TRANSAXLE/AUTOMATIC - 41TE - REMOVAL).

(2) Using Tool C-3981-B, remove oil pump seal (Fig. 273).

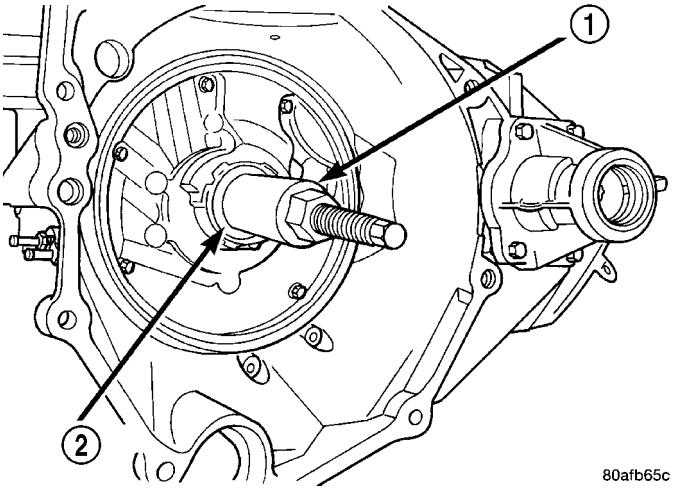

Fig. 273 Remove Oil Pump Seal

1 - TOOL C-3981–B
2 - OIL PUMP SEAL

INSTALLATION

(1) Using Tool C-4193, install oil pump seal (Fig. 274).

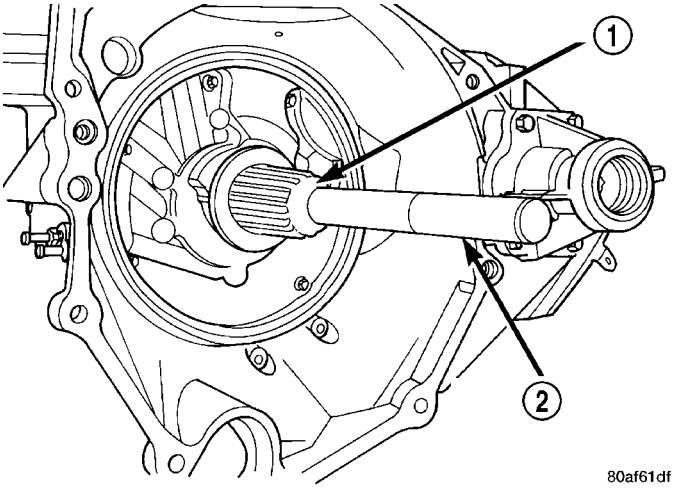

Fig. 274 Install Oil Pump Seal

1 - TOOL C-4193
2 - HANDLE TOOL C-4171

(2) Install transaxle to vehicle (Refer to 21 - TRANSMISSION/TRANSAXLE/AUTOMATIC - 41TE - INSTALLATION).

SHIFT INTERLOCK CABLE

DESCRIPTION

The Brake Transmission Shifter/Ignition Interlock (BTSI) is a cable and solenoid operated system that prevents the transmission gear shifter from being moved out of PARK without a driver in place.

Refer to the following chart that expected shifter response, depending on ignition key/switch (Fig. 275) and brake pedal positions.

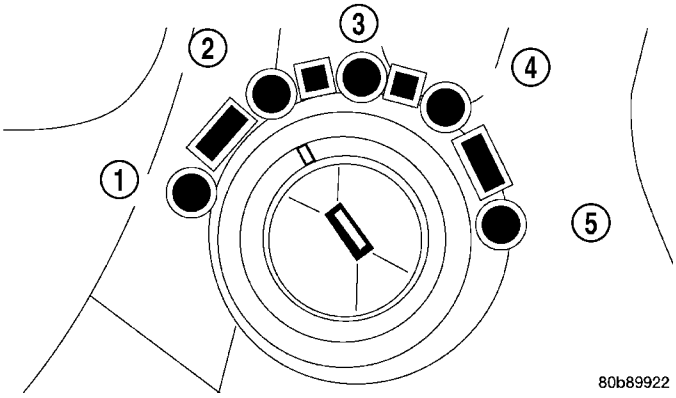

Fig. 275 Ignition Key/Switch Positions

1 - ACC
2 - LOCK
3 - OFF
4 - ON/RUN
5 - START

OPERATION

The Brake Transmission Shifter/Ignition Interlock (BTSI) is engaged whenever the ignition switch is in the LOCK or ACCESSORY position (Fig. 275). An additional electrically activated feature will prevent shifting out of the PARK position unless the brake pedal is depressed at least one-half inch. A magnetic holding device integral to the interlock cable is energized when the ignition is in the ON/RUN position. When the key is in the ON/RUN position and the brake pedal is depressed, the shifter is unlocked and will move into any position. The interlock system also prevents the ignition switch from being turned to the LOCK or ACCESSORY position, unless the shifter is in the gated PARK position.

SHIFT INTERLOCK CABLE (Continued)

The following chart describes the normal operation of the Brake Transmission Shift Interlock (BTSI) system. If the “expected response” differs from the vehicle’s response, then system repair and/or adjustment is necessary.

ACTION	EXPECTED RESPONSE
1. Turn key to the ″OFF″ position.	1. Shifter CAN be shifted out of park.
2. Turn key to the ″ON/RUN″ position.	2. Shifter CANNOT be shifted out of park.
3. Turn key to the ″ON/RUN″ position and depress the brake pedal.	3. Shifter CAN be shifted out of park.
4. Leave shifter in any gear and try to return key to the ″LOCK″ or ″ACC″ position.	4. Key cannot be returned to the ″LOCK″ or ″ACC″ position.
5. Return shifter to ″PARK″ and try to remove the key.	5. Key can be removed (after returning to ″LOCK″ position).
6. With the key removed, try to shift out of ″PARK″.	6. Shifter cannot be shifted out of ″PARK″.
NOTE: Any failure to meet these expected responses requires system adjustment or repair.	

REMOVAL

(1) Disconnect and isolate the battery negative cable.

(2) Remove the gearshift knob set screw and knob (Fig. 276).

(3) Remove gearshift bezel (Fig. 277).

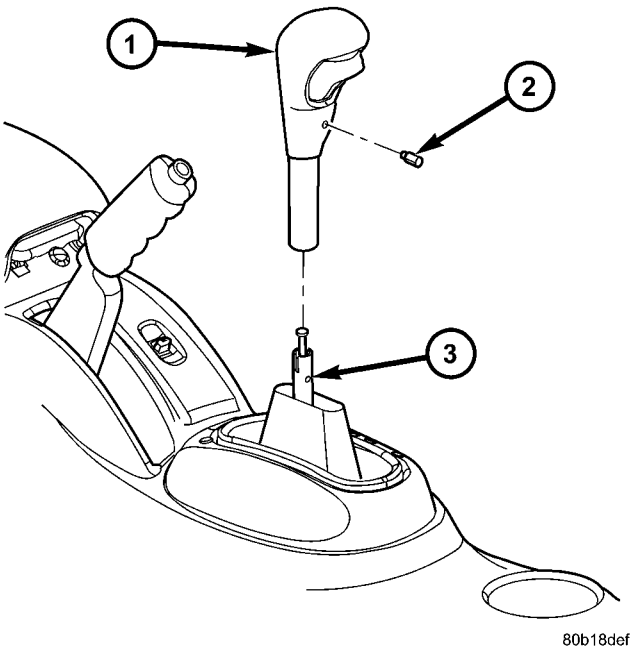

Fig. 276 Gearshift Knob

1 - GEARSHIFT KNOB
2 - SET SCREW
3 - GEARSHIFT MECHANISM

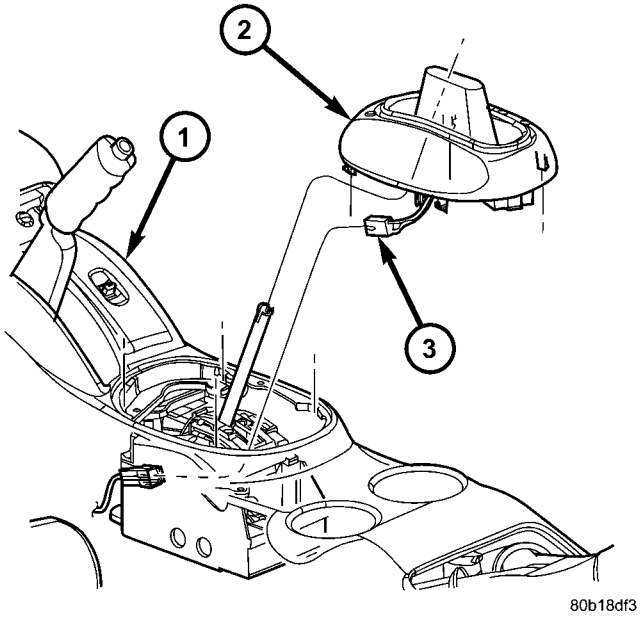

Fig. 277 Gearshift Bezel

1 - CENTER CONSOLE ASSEMBLY
2 - GEARSHIFT BEZEL
3 - LAMP CONNECTOR

SHIFT INTERLOCK CABLE (Continued)

(4) Remove center console assembly (Fig. 278).

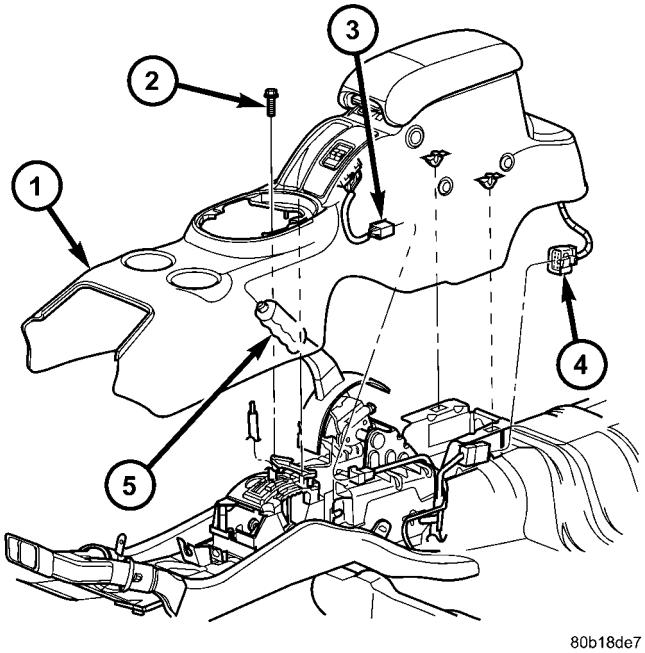

Fig. 278 Center Console Assembly

1 - CENTER CONSOLE
2 - SCREW
3 - IF EQUIPPED
4 - IF EQUIPPED
5 - PARK BRAKE HANDLE

(5) Release interlock cable adjuster end by inserting pointed object into shift bracket to disengage lock (Fig. 279). Unsnap the shifter/ignition interlock cable adjuster end from the slot in the gearshift mechanism bracket and disconnect cable core from shifter assembly (Fig. 280).

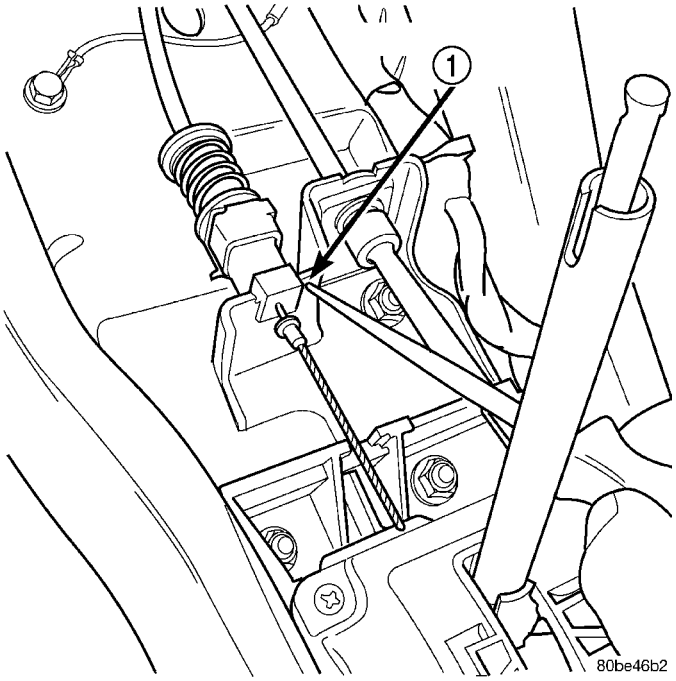

Fig. 279 Release Cable from Bracket at Retainer Lock

1 - RELEASE CABLE HERE

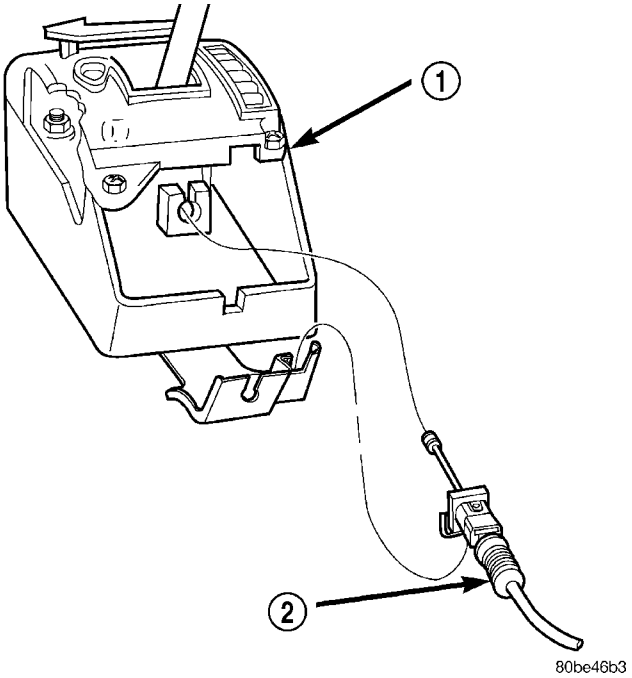

Fig. 280 Interlock Cable at Floor Shifter Assembly

1 - SHIFTER ASSEMBLY
2 - INTERLOCK CABLE

SHIFT INTERLOCK CABLE (Continued)

(6) Remove fuse panel cover from left end of instrument panel. Remove screw holding end of instrument panel top cover (Fig. 281).

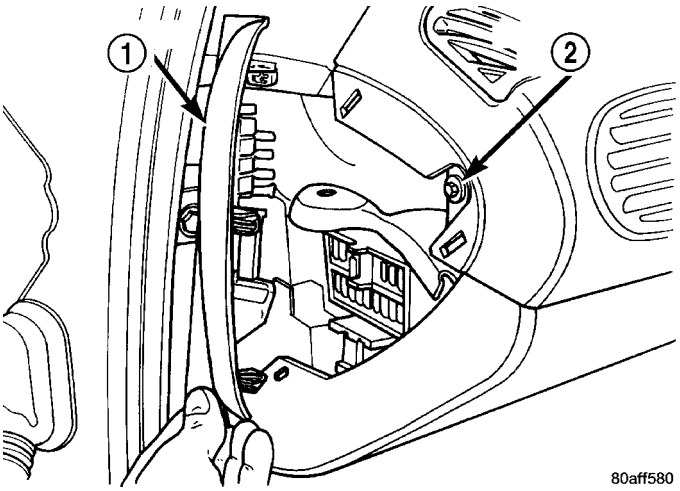

Fig. 281 Instrument Panel Top

1 - FUSE PANEL COVER
2 - SCREW

(7) Remove lower knee bolster screws and knee bolster.

(8) Remove steering column lower shroud (Fig. 282).

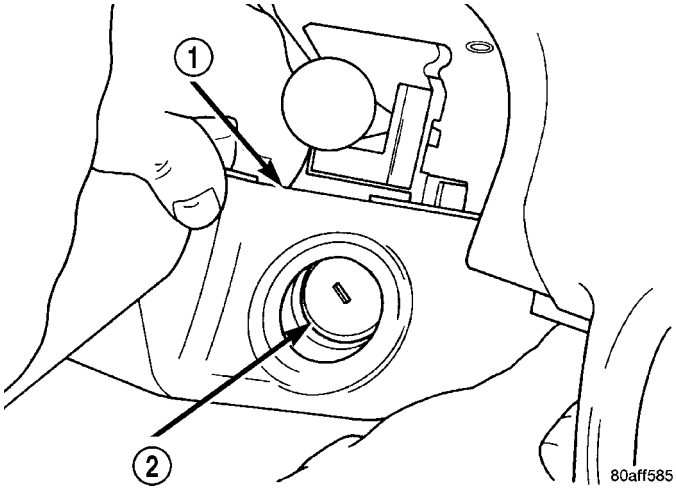

Fig. 282 Steering Column Lower Shroud

1 - STEERING COLUMN LOWER SHROUD
2 - IGNITION CYLINDER

(9) Tilt wheel to full down position and remove upper steering column shroud.

(10) Disconnect interlock solenoid connector.

(11) Disconnect nylon cable retainer from lower column mounting stud.

(12) Place the ignition key in the ON/RUN position (Fig. 283). Grasp the interlock cable clip and connector. Remove the cable from the interlock housing (Fig. 284).

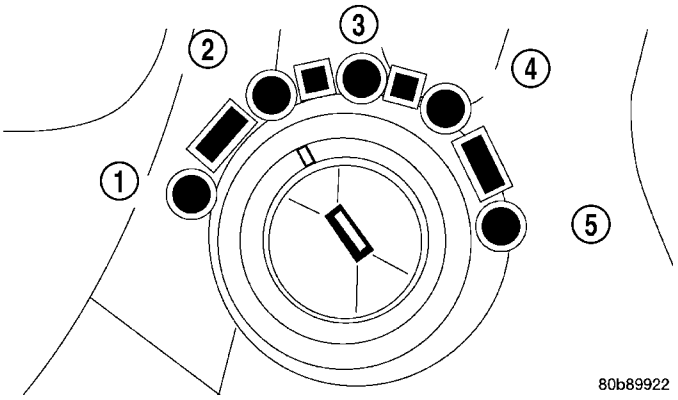

Fig. 283 Ignition Key/Switch Positions

1 - ACC
2 - LOCK
3 - OFF
4 - ON/RUN
5 - START

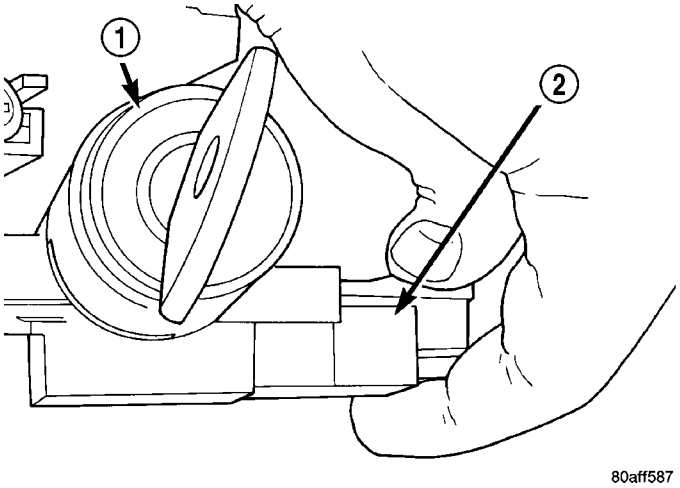

Fig. 284 Interlock Cable and Connector

1 - IGNITION LOCK CYLINDER
2 - INTERLOCK CABLE

(13) Remove interlock cable from underside of instrument panel.

INSTALLATION

CAUTION: When installing interlock cable assembly, care must be taken not to bend exposed cable wire and slug at shifter end of cable.

(1) Route interlock cable into lower dash panel and towards console as removed.

(2) Turn the ignition switch to the ON/RUN position (Fig. 283).

SHIFT INTERLOCK CABLE (Continued)

(3) Install the interlock cable into the interlock housing at the steering column (Fig. 285). Verify the cable snaps into the housing.

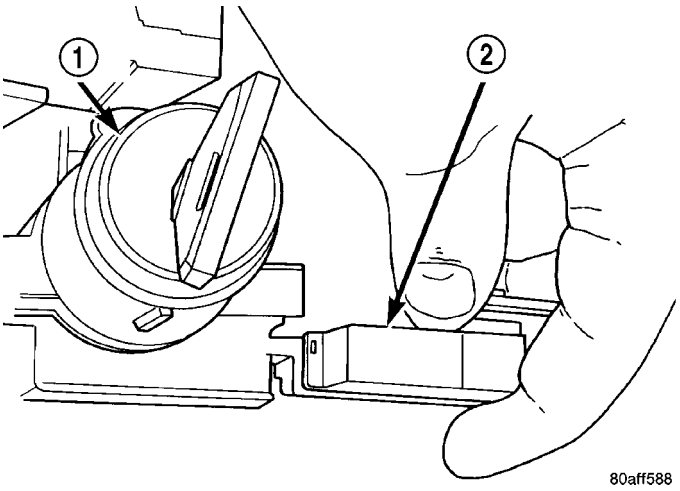

Fig. 285 Interlock Cable At Housing

1 - IGNITION LOCK CYLINDER
2 - INTERLOCK CABLE

(4) Install nylon cable retainer to lower column mounting stud.

(5) Connect BTSI solenoid connector.

(6) Insert interlock cable core wire into interlock adjustment lever groove. Make sure the interlock cable slug is seated in the groove (Fig. 280).

(7) Insert interlock cable adjuster end into bracket and snap into place (Fig. 280).

NOTE: The Interlock Cable MUST be adjusted. (Refer to 21 - TRANSMISSION/TRANSAXLE/AUTOMATIC - 41TE/SHIFT INTERLOCK CABLE - ADJUSTMENTS)

(8) Install center console assembly (Fig. 278).

(9) Install gearshift bezel (Fig. 276).

(10) Install the gearshift knob and tighten set screw (Fig. 276) to 2 N·m (20 in.lbs.).

(11) Tilt wheel to full down position and install upper steering column shroud.

(12) Install steering column lower shroud (Fig. 282).

(13) Install lower knee bolster screws and knee bolster.

(14) Install fuse panel cover (Fig. 281).

(15) Connect the battery negative cable.

ADJUSTMENTS

BRAKE/TRANSMISSION SHIFT INTERLOCK CABLE VERIFICATION AND ADJUSTMENT

VERIFICATION

The following chart describes the normal operation of the Brake Transmission Shift Interlock (BTSI) system. If the “expected response” differs from the vehicle’s response, then system repair and/or adjustment is necessary. Refer to the following chart that expected shifter response, depending on ignition key/switch (Fig. 286) and brake pedal positions.

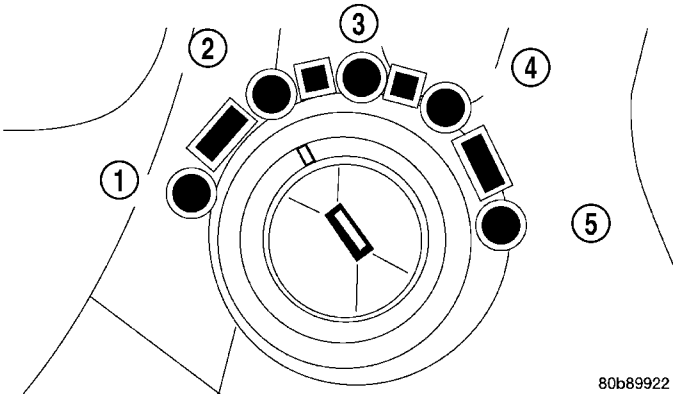

Fig. 286 Ignition Key/Switch Positions

1 - ACC
2 - LOCK
3 - OFF
4 - ON/RUN
5 - START

ACTION	EXPECTED RESPONSE
1. Turn key to the ″OFF″ position.	1. Shifter CAN be shifted out of park.
2. Turn key to the ″ON/RUN″ position.	2. Shifter CANNOT be shifted out of park.
3. Turn key to the ″ON/RUN″ position and depress the brake pedal.	3. Shifter CAN be shifted out of park.
4. Leave shifter in any gear and try to return key to the ″LOCK″ or ″ACC″ position.	4. Key cannot be returned to the ″LOCK″ or ″ACC″ position.
5. Return shifter to ″PARK″ and try to remove the key.	5. Key can be removed (after returning to ″LOCK″ position).
6. With the key removed, try to shift out of ″PARK″.	6. Shifter cannot be shifted out of ″PARK″.
NOTE: Any failure to meet these expected responses requires system adjustment or repair.	

SHIFT INTERLOCK CABLE (Continued)

ADJUSTMENT

(1) Disconnect and isolate, the battery negative cable.

(2) Remove the gearshift knob set screw and knob (Fig. 287).

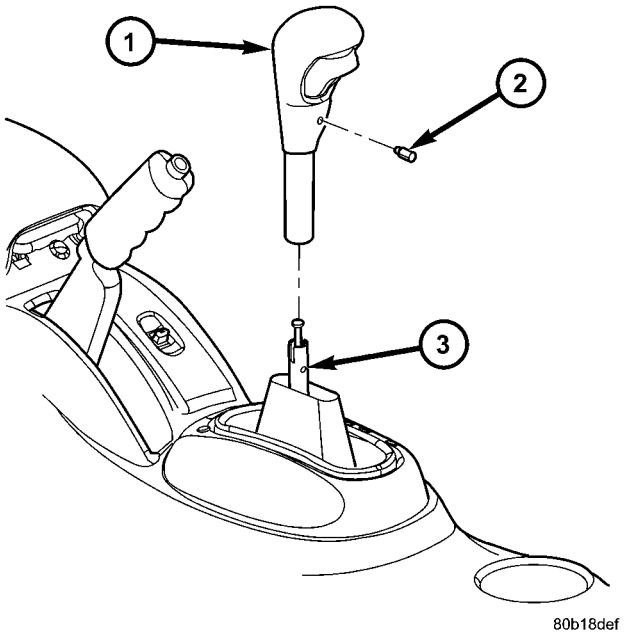

Fig. 287 Gearshift Knob

1 - GEARSHIFT KNOB
2 - SET SCREW
3 - GEARSHIFT MECHANISM

(3) Remove the gearshift bezel to gain access to the interlock cable adjuster lock (Fig. 288).

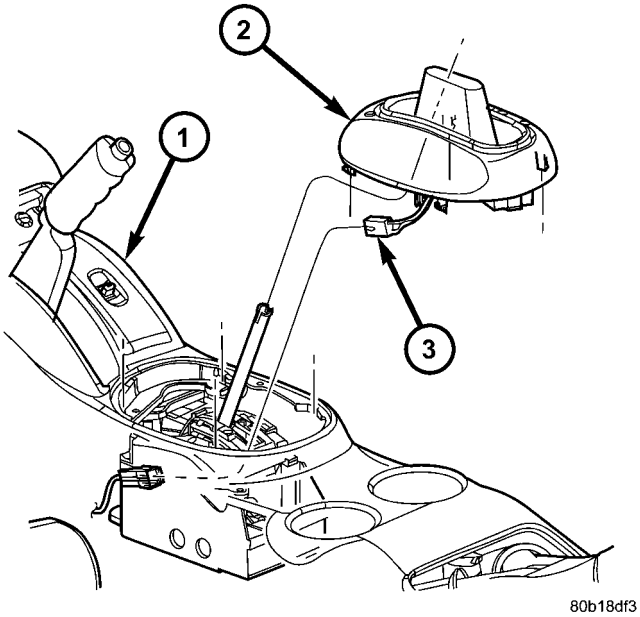

Fig. 288 Gearshift Bezel

1 - CENTER CONSOLE ASSEMBLY
2 - GEARSHIFT BEZEL
3 - LAMP CONNECTOR

(4) Re-install the gearshift knob set screw and knob (Fig. 287).

(5) Place the shift lever in PARK. Move the Ignition key to the LOCK position (Fig. 286) and remove the key.

(6) If the interlock cable is being replaced, remove the lock pin (Fig. 289). This will allow the cable to “self adjust” to the correct position. Tighten the locking clip by pushing it down (Fig. 290).

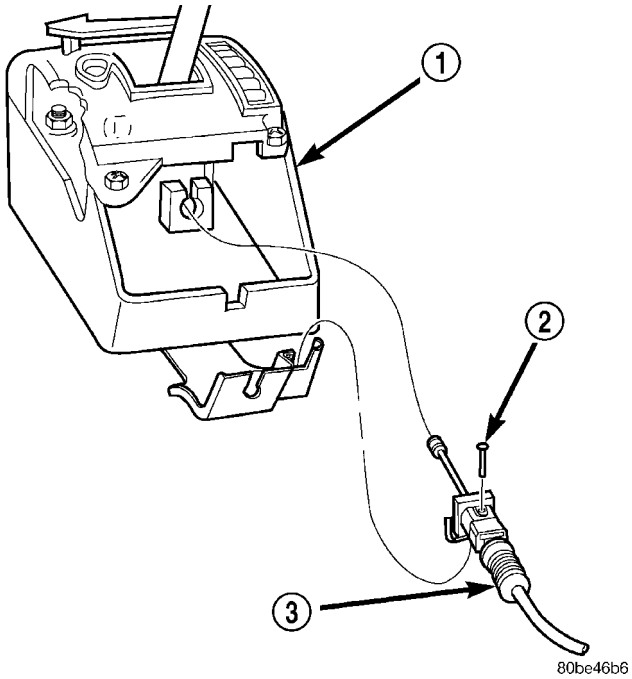

Fig. 289 Interlock Cable Locking Pin

1 - SHIFT MECHANISM
2 - LOCKING PIN
3 - INTERLOCK CABLE

SHIFT INTERLOCK CABLE (Continued)

(7) If the interlock cable **is not** being replaced, the lock pin will not exist. Pull outward on cable locking clip to allow cable to self adjust. Press clip down to lock in place (Fig. 290).

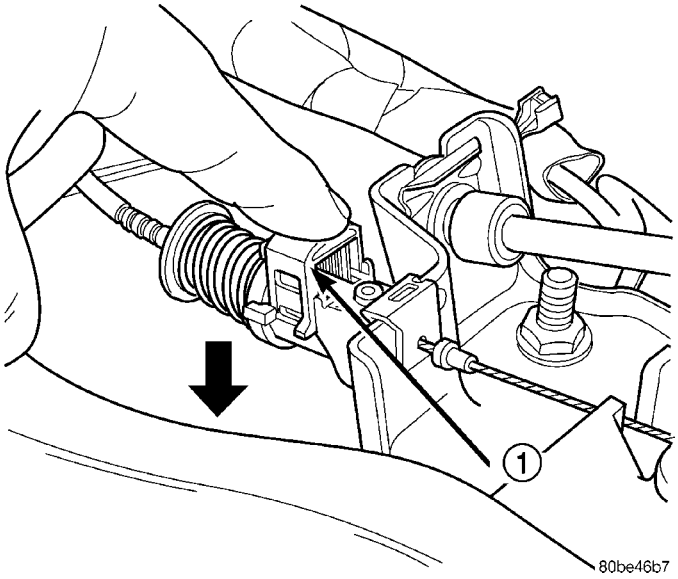

Fig. 290 Locking Clip

1 - LOCKING CLIP

(8) Verify Brake/Transmission Shift Interlock system operation. Refer to operation chart in "Verification."

(9) Install the gearshift bezel (Fig. 288).

(10) Install the gearshift knob and tighten set screw (Fig. 287) to 2 N·m (20 in. lbs.).

(11) Connect the battery negative cable.

SHIFT INTERLOCK MECHANISM

REMOVAL

(1) Remove steering column upper and lower shrouds.

(2) Grasp the interlock cable and connector firmly. Remove the interlock cable.

(3) Remove the two interlock mechanism to steering column attaching screws (Fig. 291). Remove the interlock mechanism.

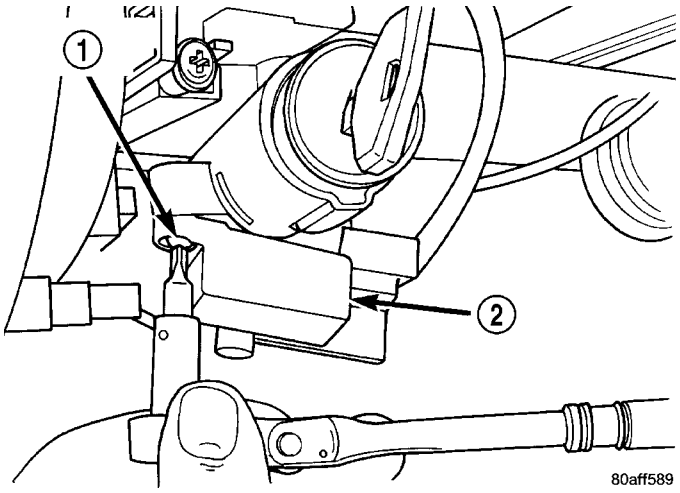

Fig. 291 Interlock Mechanism

1 - MOUNTING SCREW
2 - INTERLOCK MECHANISM

INSTALLATION

(1) Position the interlock housing at steering column. Install the two interlock mechanism to steering column attaching screws (Fig. 291). Torque screws to 3 N·m (21 in. lbs.).

(2) Snap the interlock cable into the housing.

(3) Install the lower column covers, shrouds and knee bolster.

SOLENOID/PRESSURE SWITCH ASSY

DESCRIPTION

The Solenoid/Pressure Switch Assembly (Fig. 292) is external to the transaxle and mounted to the transaxle case. The assembly consists of four solenoids that control hydraulic pressure to the LR/CC, 2/4, OD, and UD friction elements. The reverse clutch is controlled by line pressure from the manual valve in the valve body. The solenoids are contained within the Solenoid/Pressure Switch Assembly, and can only be serviced by replacing the assembly.

The solenoid assembly also contains pressure switches that monitor and send hydraulic circuit information to the PCM/TCM. Likewise, the pressure switches can only be service by replacing the assembly.

SOLENOID/PRESSURE SWITCH ASSY (Continued)

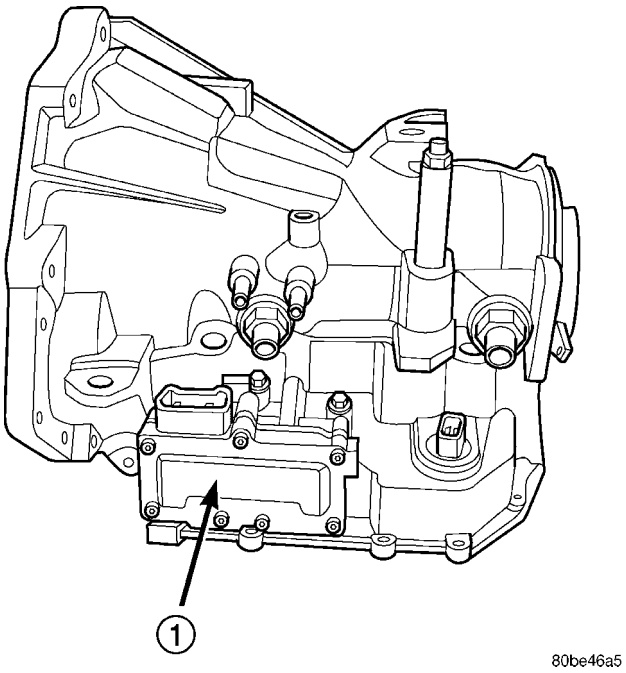

Fig. 292 Solenoid/Pressure Switch Assembly

1 - SOLENOID AND PRESSURE SWITCH ASSEMBLY

OPERATION

SOLENOIDS

The solenoids receive electrical power from the Transmission Control Relay through a single wire. The PCM/TCM energizes or operates the solenoids individually by grounding the return wire of the solenoid needed. When a solenoid is energized, the solenoid valve shifts, and a fluid passage is opened or closed (vented or applied), depending on its default operating state. The result is an apply or release of a frictional element.

The 2/4 and UD solenoids are normally applied, which by design allow fluid to pass through in their relaxed or “off” state. This allows transaxle limp-in (P,R,N,2) in the event of an electrical failure.

The continuity of the solenoids and circuits are periodically tested. Each solenoid is turned on or off depending on its current state. An inductive spike should be detected by the PCM/TCM during this test. It no spike is detected, the circuit is tested again to verify the failure. In addition to the periodic testing, the solenoid circuits are tested if a speed ratio or pressure switch error occurs.

PRESSURE SWITCHES

The PCM/TCM relies on three pressure switches to monitor fluid pressure in the L/R, 2/4, and OD hydraulic circuits. The primary purpose of these switches is to help the PCM/TCM detect when clutch circuit hydraulic failures occur. The range for the pressure switch closing and opening points is 11-23 psi. Typically the switch opening point will be approximately one psi lower than the closing point. For example, a switch may close at 18 psi and open at 17 psi. The switches are continuously monitored by the PCM/TCM for the correct states (open or closed) in each gear as shown in the following chart:

PRESSURE SWITCH STATES

GEAR	L/R	2/4	OD
R	OP	OP	OP
P/N	CL	OP	OP
1st	CL	OP	OP
2nd	OP	CL	OP
D	OP	OP	CL
OD	OP	CL	CL

OP = OPEN

CL = CLOSED

A Diagnostic Trouble Code (DTC) will set if the PCM/TCM senses any switch open or closed at the wrong time in a given gear.

The PCM/TCM also tests the 2/4 and OD pressure switches when they are normally off (OD and 2/4 are tested in 1st gear, OD in 2nd gear, and 2/4 in 3rd gear). The test simply verifies that they are operational, by looking for a closed state when the corresponding element is applied. Immediately after a shift into 1st, 2nd, or 3rd gear with the engine speed above 1000 rpm, the PCM/TCM momentarily turns on element pressure to the 2/4 and/or OD clutch circuits to identify that the appropriate switch has closed. If it doesn’t close, it is tested again. If the switch fails to close the second time, the appropriate Diagnostic Trouble Code (DTC) will set.

SOLENOID/PRESSURE SWITCH ASSY (Continued)

REMOVAL

NOTE: If solenoid/pressure switch assembly is being replaced, it is necessary to perform the TCM Quick Learn Procedure. (Refer to 8 - ELECTRICAL/ ELECTRONIC CONTROL MODULES/TRANSMISSION CONTROL MODULE - STANDARD PROCEDURE)

(1) Disconnect battery negative cable.
(2) Remove air cleaner assembly.
(3) Disconnect solenoid/pressure switch assembly connector (Fig. 293).
(4) Disconnect input speed sensor connector (Fig. 293).

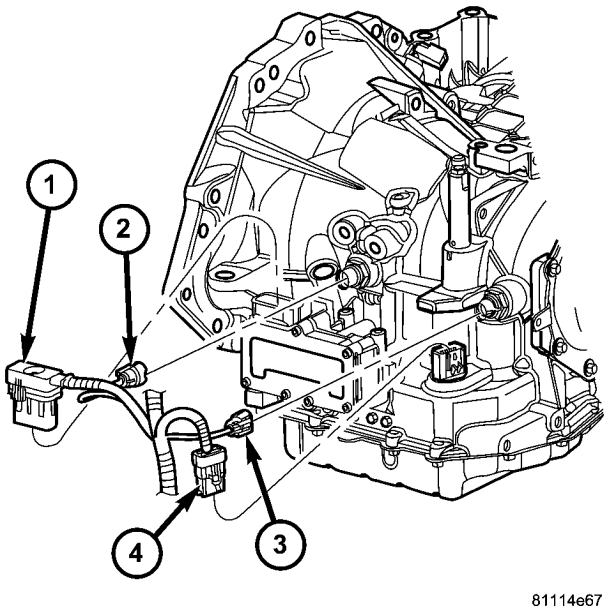

Fig. 293 Transmission Connectors

1 - SOLENOID PACK CONNECTOR
2 - INPUT SPEED SENSOR CONNECTOR
3 - OUTPUT SPEED SENSOR CONNECTOR
4 - TRANSMISSION RANGE SENSOR CONNECTOR

(5) Remove input speed sensor (Fig. 294).
(6) Remove three (3) solenoid/pressure switch assembly-to-transaxle case bolts (Fig. 295).

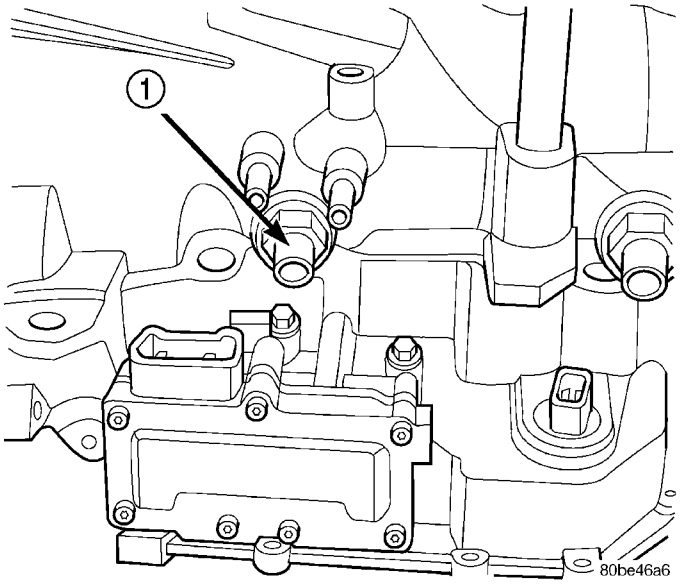

Fig. 294 Input Speed Sensor

1 - INPUT SPEED SENSOR

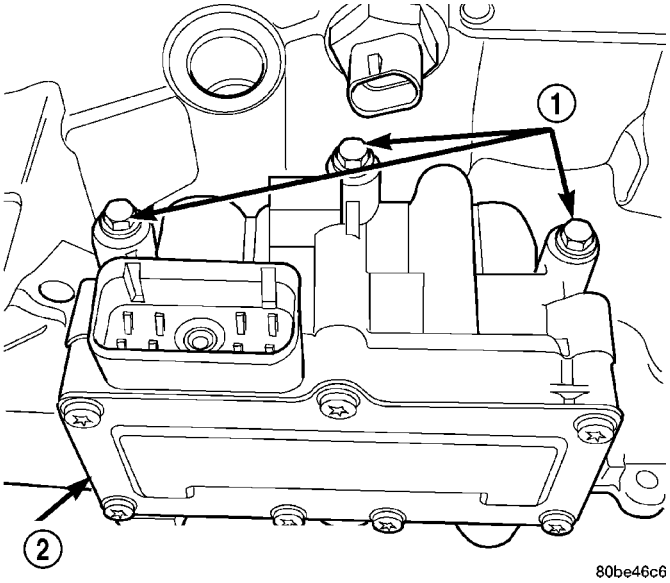

Fig. 295 Solenoid/Pressure Switch Assembly-to-Case Bolts

1 - BOLTS
2 - SOLENOID AND PRESSURE SWITCH ASSEMBLY

SOLENOID/PRESSURE SWITCH ASSY (Continued)

(7) Remove solenoid/pressure switch assembly and gasket (Fig. 296). Use care to prevent gasket material and foreign objects from become lodged in the transaxle case ports.

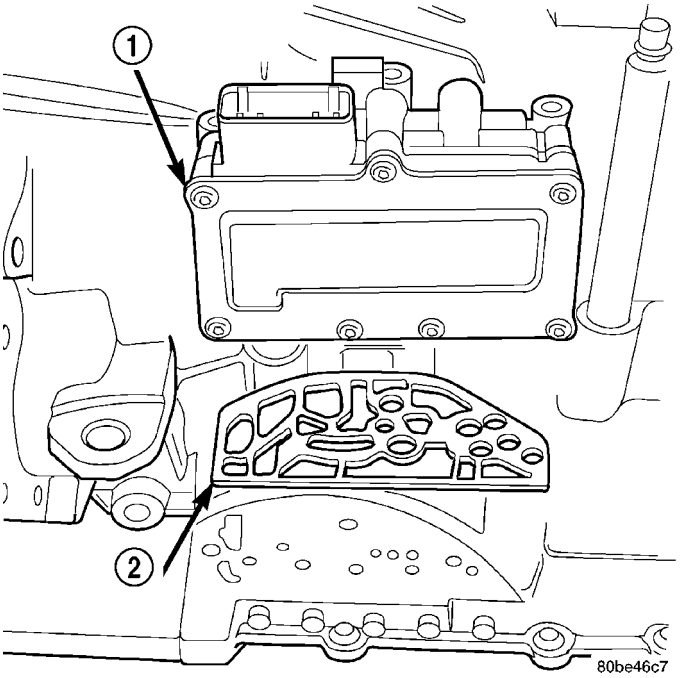

Fig. 296 Solenoid/Pressure Switch Assembly and Gasket

1 - SOLENOID/PRESSURE SWITCH ASSEMBLY
2 - GASKET

INSTALLATION

NOTE: If solenoid/pressure switch assembly is being replaced, it is necessary to perform the TCM Quick Learn Procedure. (Refer to 8 - ELECTRICAL/ ELECTRONIC CONTROL MODULES/TRANSMISSION CONTROL MODULE - STANDARD PROCEDURE)

(1) Install solenoid/pressure switch assembly and new gasket to transaxle (Fig. 296).

(2) Install and torque three (3) bolts (Fig. 295) to 13 N·m (110 in. lbs.).

(3) Install input speed sensor (Fig. 294) and torque to 27 N·m (20 ft. lbs.).

(4) Connect input speed sensor connector (Fig. 293).

(5) Install solenoid/pressure switch 8-way connector and torque to 4 N·m (35 in. lbs.) (Fig. 293).

(6) Install air cleaner assembly.

(7) Connect battery negative cable.

(8) If solenoid/pressure switch assembly was replaced, perform TCM Quick Learn procedure. (Refer to 8 - ELECTRICAL/ELECTRONIC CONTROL MODULES/TRANSMISSION CONTROL MODULE - STANDARD PROCEDURE)

SPEED SENSOR - INPUT

DESCRIPTION

The Input Speed Sensor is a two-wire magnetic pickup device that generates AC signals as rotation occurs. It is threaded into the transaxle case (Fig. 297), sealed with an o-ring (Fig. 298), and is considered a primary input to the Powertrain/Transmission Control Module.

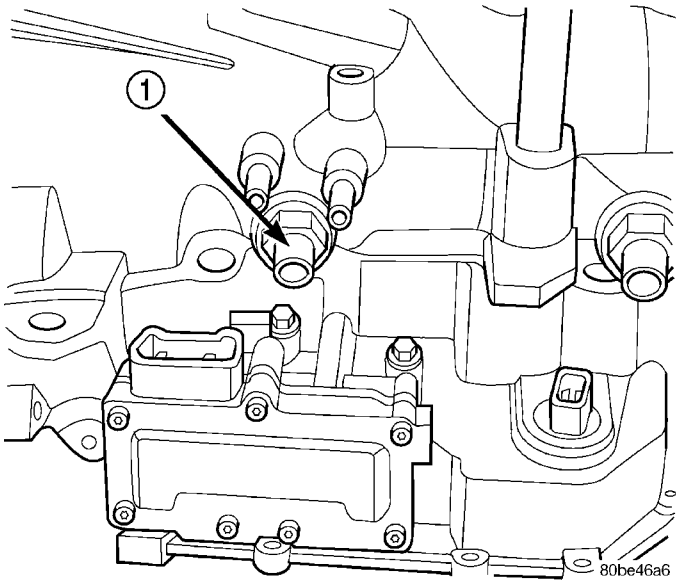

Fig. 297 Input Speed Sensor Location

1 - INPUT SPEED SENSOR

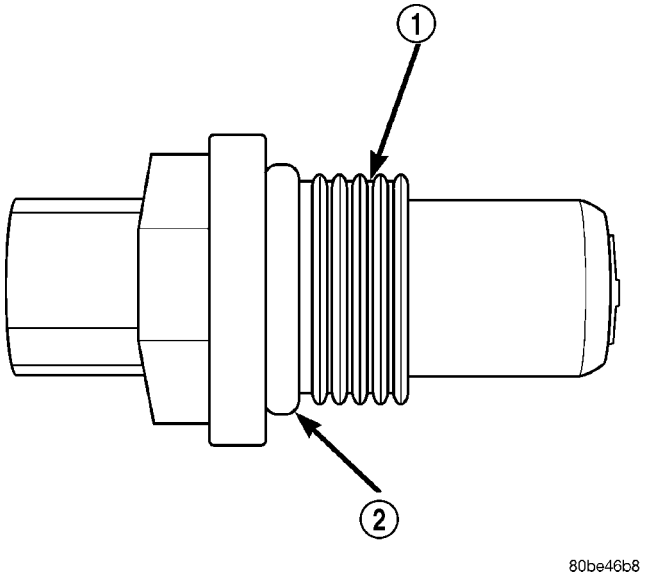

Fig. 298 O-Ring Location

1 - INPUT SPEED SENSOR
2 - O-RING

SPEED SENSOR - INPUT (Continued)

OPERATION

The Input Speed Sensor provides information on how fast the input shaft is rotating. As the teeth of the input clutch hub pass by the sensor coil (Fig. 299), an AC voltage is generated and sent to the PCM/TCM. The PCM/TCM interprets this information as input shaft rpm.

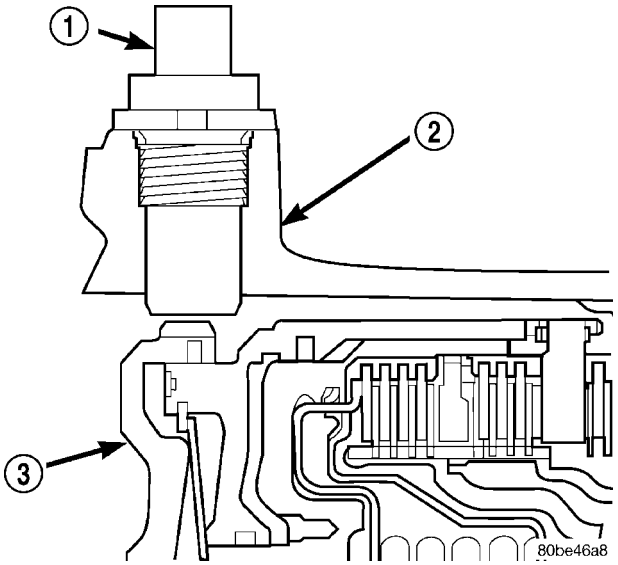

Fig. 299 Sensor Relation to Input Clutch Hub

1 - INPUT SPEED SENSOR
2 - TRANSAXLE CASE
3 - INPUT CLUTCH HUB

The PCM/TCM compares the input speed signal with output speed signal to determine the following:

- Transmission gear ratio
- Speed ratio error detection
- CVI calculation

The PCM/TCM also compares the input speed signal and the engine speed signal to determine the following:

- Torque converter clutch slippage
- Torque converter element speed ratio

REMOVAL

(1) Disconnect battery negative cable.

(2) Disconnect input speed sensor connector (Fig. 300).

(3) Unscrew and remove input speed sensor (Fig. 301).

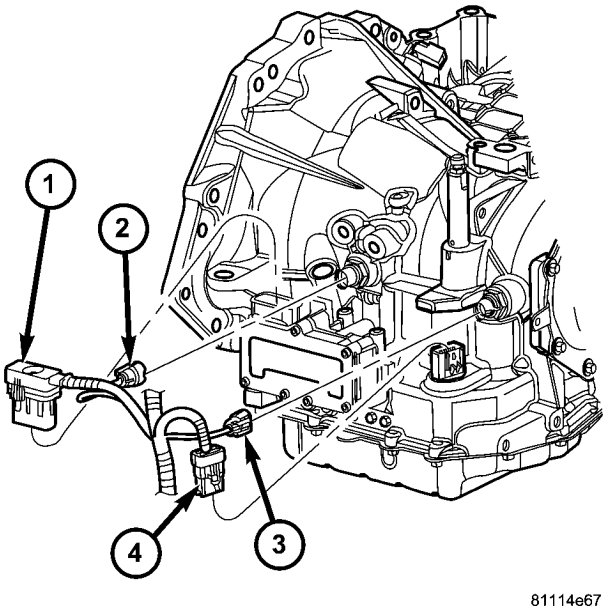

Fig. 300 Transmission Connectors

1 - SOLENOID PACK CONNECTOR
2 - INPUT SPEED SENSOR CONNECTOR
3 - OUTPUT SPEED SENSOR CONNECTOR
4 - TRANSMISSION RANGE SENSOR CONNECTOR

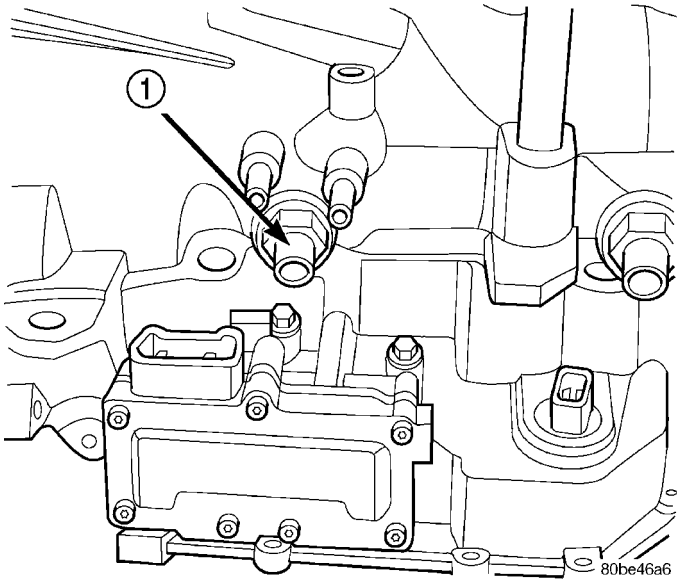

Fig. 301 Input (Turbine) Speed Sensor

1 - INPUT SPEED SENSOR

SPEED SENSOR - INPUT (Continued)

(4) Inspect speed sensor o-ring (Fig. 302) and replace if necessary.

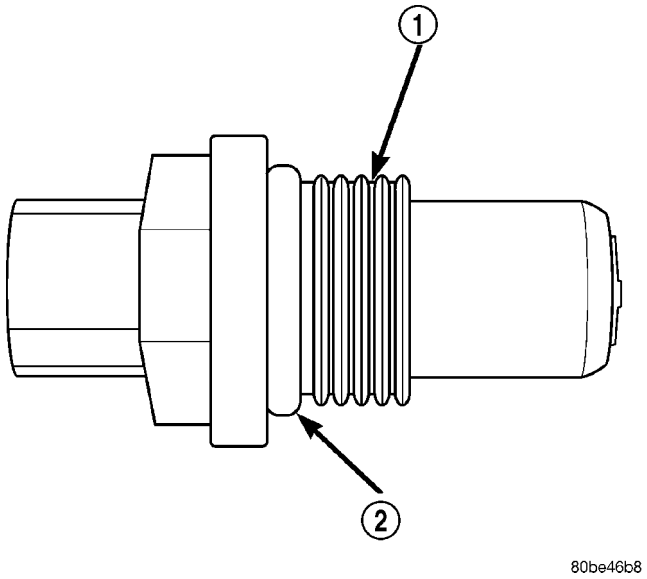

Fig. 302 O-ring Location

1 - INPUT SPEED SENSOR
2 - O-RING

INSTALLATION

(1) Verify o-ring is installed into position (Fig. 302).

(2) Install and tighten input speed sensor to 27 N·m (20 ft. lbs.) (Fig. 301).

(3) Connect speed sensor connector (Fig. 300).

(4) Connect battery negative cable.

SPEED SENSOR - OUTPUT

DESCRIPTION

The Output Speed Sensor is a two-wire magnetic pickup device that generates an AC signal as rotation occurs. It is threaded into the transaxle case (Fig. 303), sealed with an o-ring (Fig. 304), and is considered a primary input to the Powetrain/Transmission Control Module.

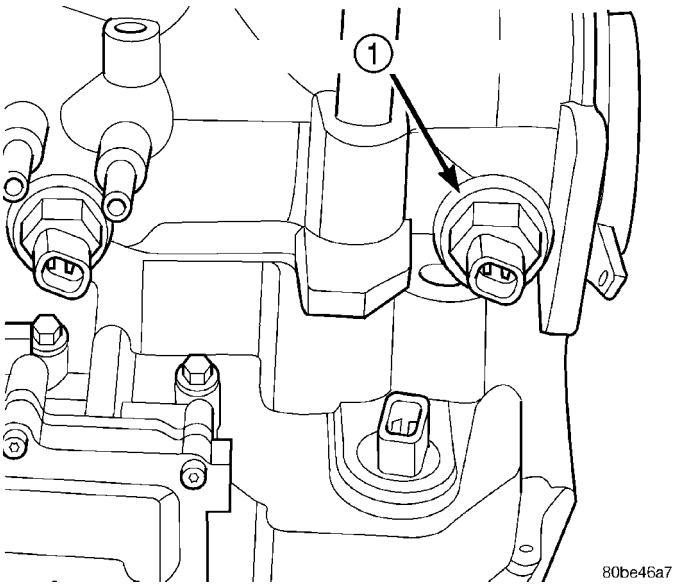

Fig. 303 Output Speed Sensor

1 - OUTPUT SPEED SENSOR

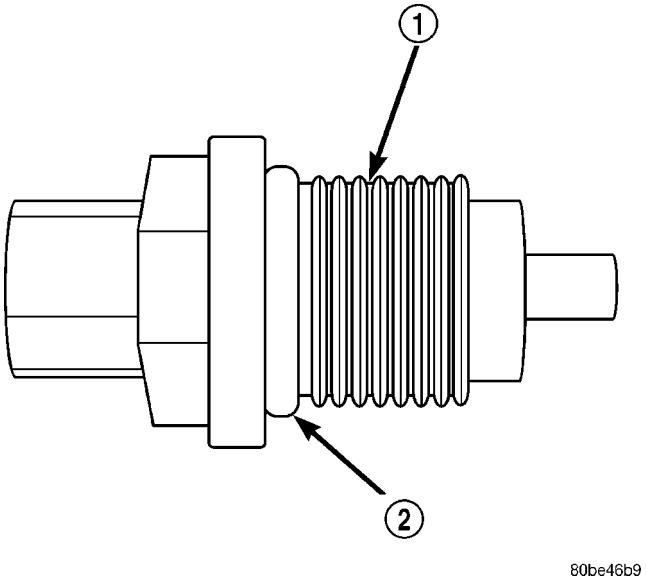

Fig. 304 O-Ring Location

1 - OUTPUT SPEED SENSOR
2 - O-RING

SPEED SENSOR - OUTPUT (Continued)

OPERATION

The Output Speed Sensor provides information on how fast the output shaft is rotating. As the rear planetary carrier park pawl lugs pass by the sensor coil (Fig. 305), an AC voltage is generated and sent to the PCM/TCM. The PCM/TCM interprets this information as output shaft rpm.

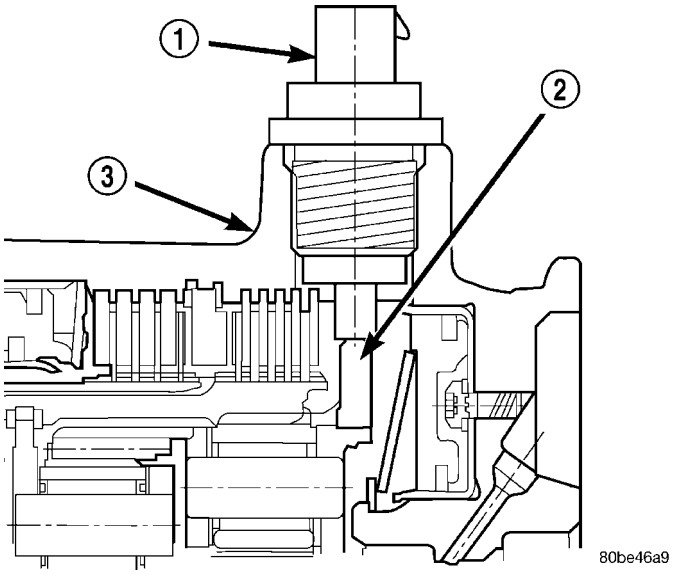

Fig. 305 Sensor Relation to Planet Carrier Park Pawl

1 - OUTPUT SPEED SENSOR
2 - REAR PLANET CARRIER/OUTPUT SHAFT ASSEMBLY
3 - TRANSAXLE CASE

The PCM/TCM compares the input and output speed signals to determine the following:

- Transmission gear ratio
- Speed ratio error detection
- CVI calculation

VEHICLE SPEED SIGNAL

The vehicle speed signal is taken from the Output Speed Sensor. The PCM converts this signal into a pulse per mile signal and sends the vehicle speed message across the communication bus to the BCM. The BCM sends this signal to the Instrument Cluster to display vehicle speed to the driver. The vehicle speed signal pulse is roughly 8000 pulses per mile.

REMOVAL

(1) Disconnect battery negative cable.
(2) Raise vehicle on hoist.
(3) Disconnect output speed sensor connector (Fig. 306).
(4) Unscrew and remove output speed sensor (Fig. 307).

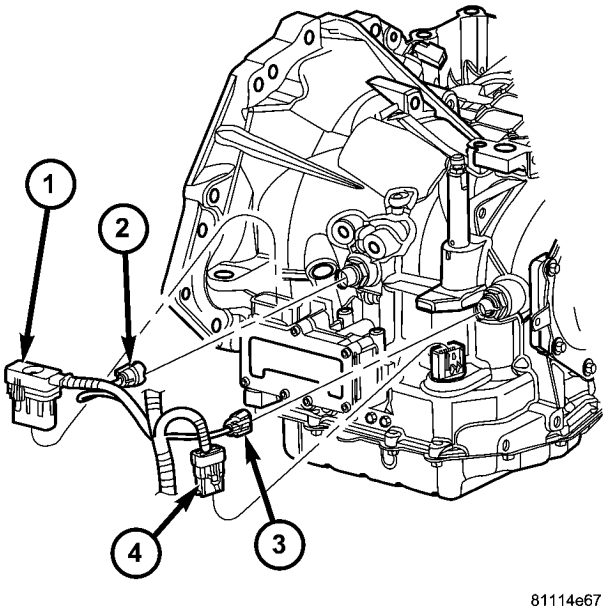

Fig. 306 Transmission Connectors

1 - SOLENOID PACK CONNECTOR
2 - INPUT SPEED SENSOR CONNECTOR
3 - OUTPUT SPEED SENSOR CONNECTOR
4 - TRANSMISSION RANGE SENSOR CONNECTOR

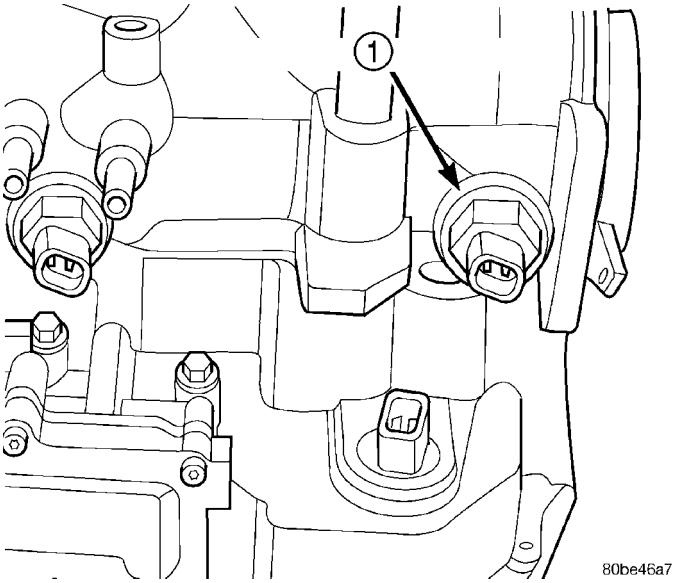

Fig. 307 Output Speed Sensor

1 - OUTPUT SPEED SENSOR

SPEED SENSOR - OUTPUT (Continued)

(5) Inspect speed sensor o-ring (Fig. 308) and replace if necessary.

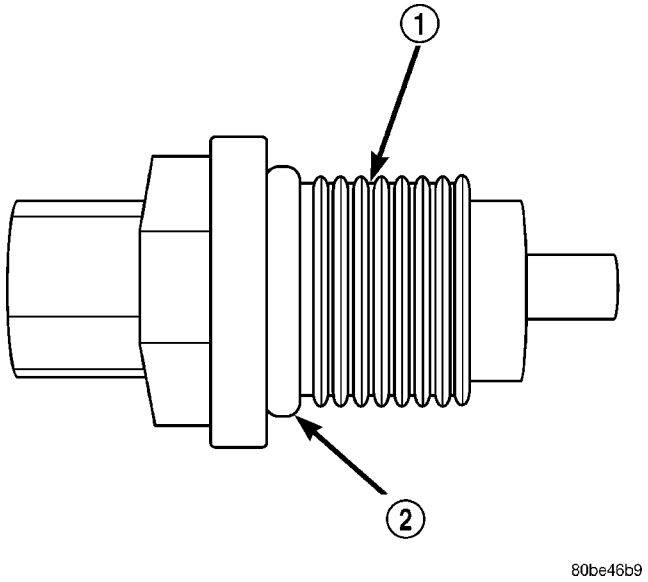

Fig. 308 O-ring Location

1 - OUTPUT SPEED SENSOR
2 - O-RING

INSTALLATION

(1) Verify o-ring is installed into position (Fig. 308).

(2) Install and tighten input speed sensor to 27 N·m (20 ft. lbs.).

(3) Connect speed sensor connector (Fig. 306).

(4) Connect battery negative cable.

TORQUE CONVERTER

DESCRIPTION

The torque converter (Fig. 309) is a hydraulic device that couples the engine crankshaft to the transmission. The torque converter consists of an outer shell with an internal turbine, a stator, an overrunning clutch, an impeller and an electronically applied converter clutch. The converter clutch provides reduced engine speed and greater fuel economy when engaged. Clutch engagement also provides reduced transmission fluid temperatures. The converter clutch engages in third gear. The torque converter hub drives the transmission oil (fluid) pump.

The torque converter is a sealed, welded unit that is not repairable and is serviced as an assembly.

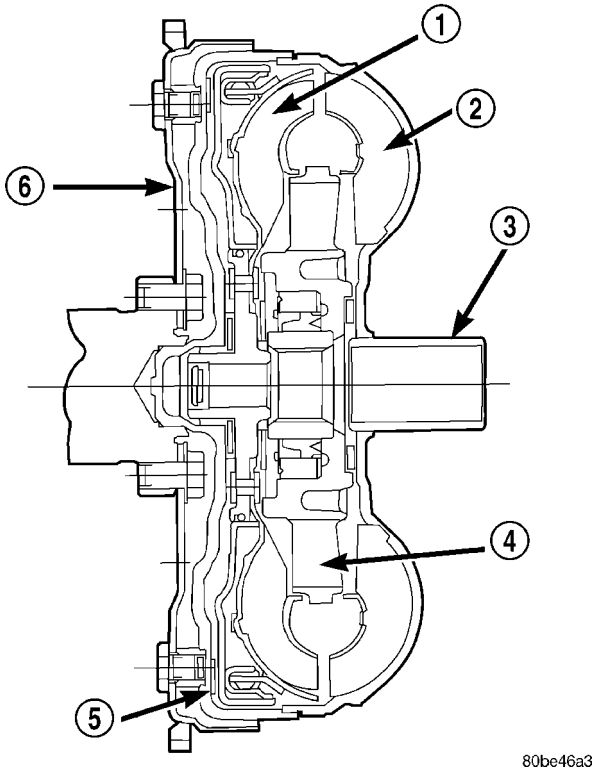

Fig. 309 Torque Converter Assembly

1 - TURBINE
2 - IMPELLER
3 - HUB
4 - STATOR
5 - CONVERTER CLUTCH DISC
6 - DRIVE PLATE

TORQUE CONVERTER (Continued)

IMPELLER

The impeller (Fig. 310) is an integral part of the converter housing. The impeller consists of curved blades placed radially along the inside of the housing on the transmission side of the converter. As the converter housing is rotated by the engine, so is the impeller, because they are one and the same and are the driving member of the system.

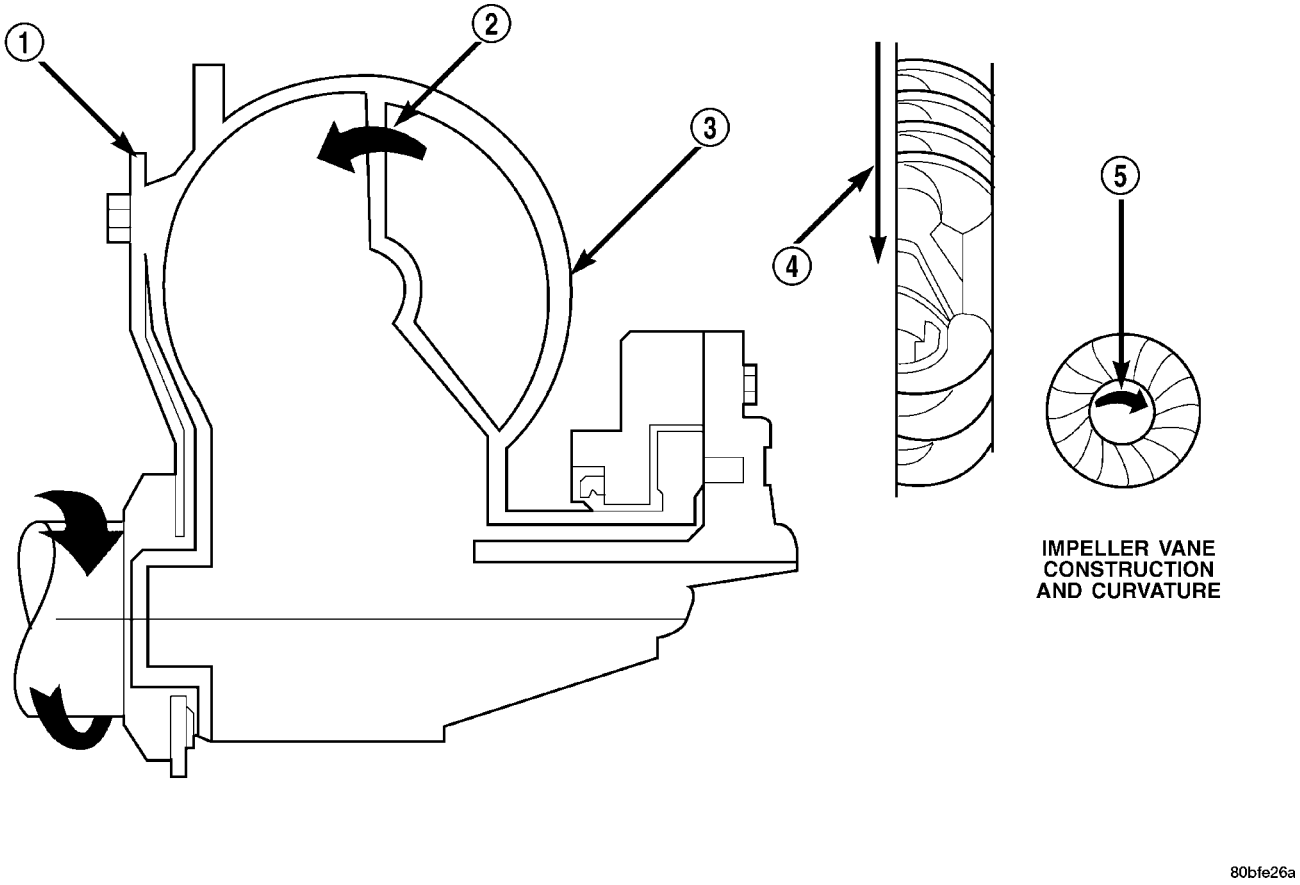

Fig. 310 Impeller

1 - ENGINE FLEXPLATE
2 - OIL FLOW FROM IMPELLER SECTION INTO TURBINE SECTION
3 - IMPELLER VANES AND COVER ARE INTEGRAL
4 - ENGINE ROTATION
5 - ENGINE ROTATION

TORQUE CONVERTER (Continued)

TURBINE

The turbine (Fig. 311) is the output, or driven, member of the converter. The turbine is mounted within the housing opposite the impeller, but is not attached to the housing. The input shaft is inserted through the center of the impeller and splined into the turbine. The design of the turbine is similar to the impeller, except the blades of the turbine are curved in the opposite direction.

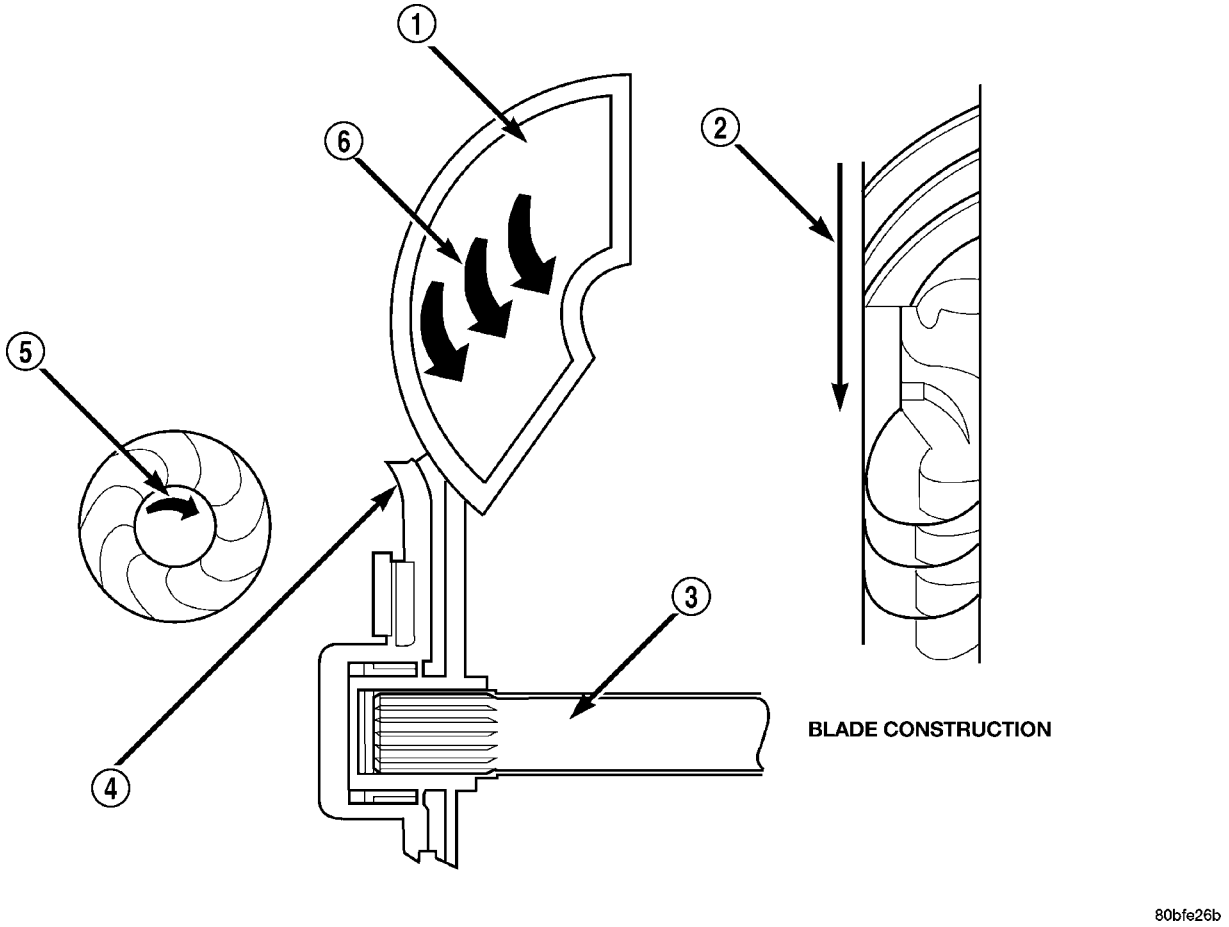

Fig. 311 Turbine

1 - TURBINE VANE
2 - ENGINE ROTATION
3 - INPUT SHAFT
4 - PORTION OF TORQUE CONVERTER COVER
5 - ENGINE ROTATION
6 - OIL FLOW WITHIN TURBINE SECTION

TORQUE CONVERTER (Continued)

STATOR

The stator assembly (Fig. 312) is mounted on a stationary shaft which is an integral part of the oil pump. The stator is located between the impeller and turbine within the torque converter case (Fig. 313). The stator contains an over-running clutch, which allows the stator to rotate only in a clockwise direction. When the stator is locked against the over-running clutch, the torque multiplication feature of the torque converter is operational.

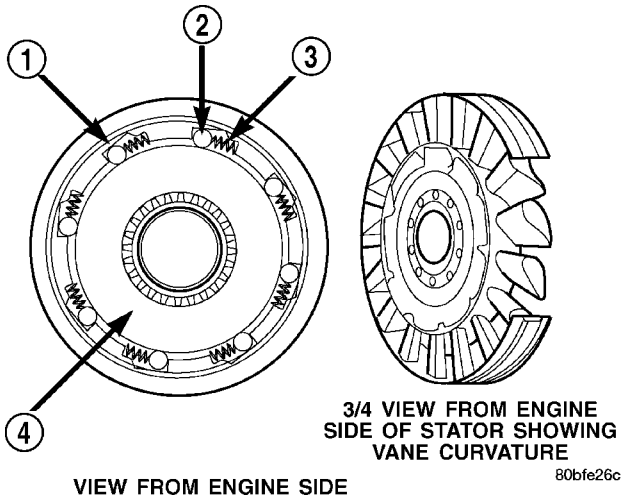

Fig. 312 Stator Components

1 - CAM (OUTER RACE)
2 - ROLLER
3 - SPRING
4 - INNER RACE

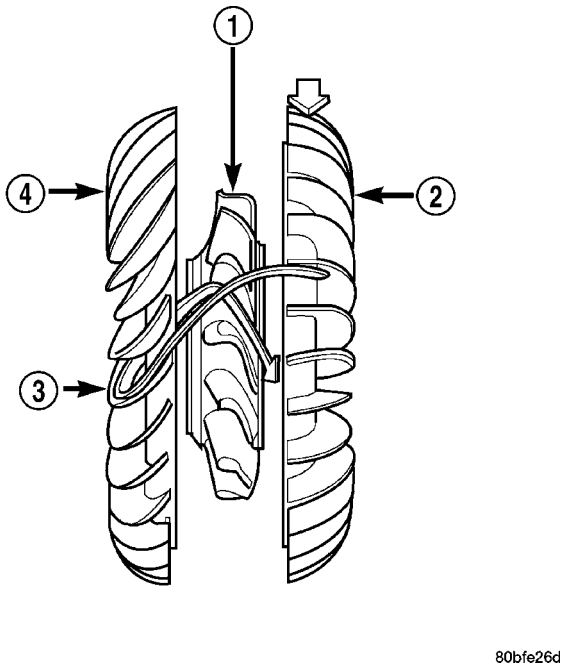

Fig. 313 Stator Location

1 - STATOR
2 - IMPELLER
3 - FLUID FLOW
4 - TURBINE

TORQUE CONVERTER (Continued)

TORQUE CONVERTER CLUTCH (TCC)

The TCC (Fig. 314) was installed to improve the efficiency of the torque converter that is lost to the slippage of the fluid coupling. Although the fluid coupling provides smooth, shock–free power transfer, it is natural for all fluid couplings to slip. If the impeller and turbine were mechanically locked together, a zero slippage condition could be obtained. A hydraulic piston was added to the turbine, and a friction material was added to the inside of the front cover to provide this mechanical lock-up.

OPERATION

The converter impeller (Fig. 315) (driving member), which is integral to the converter housing and bolted to the engine drive plate, rotates at engine speed. The converter turbine (driven member), which reacts from fluid pressure generated by the impeller, rotates and turns the transmission input shaft.

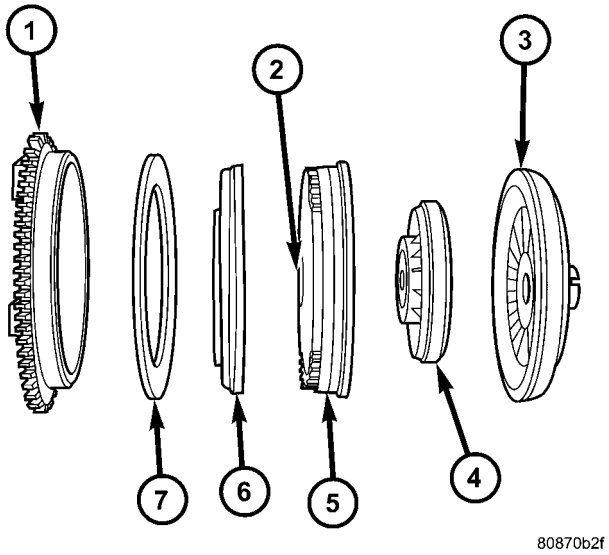

Fig. 314 Torque Converter Clutch (TCC)

1 - IMPELLER FRONT COVER
2 - THRUST WASHER ASSEMBLY
3 - IMPELLER
4 - STATOR
5 - TURBINE
6 - PISTON
7 - FRICTION DISC

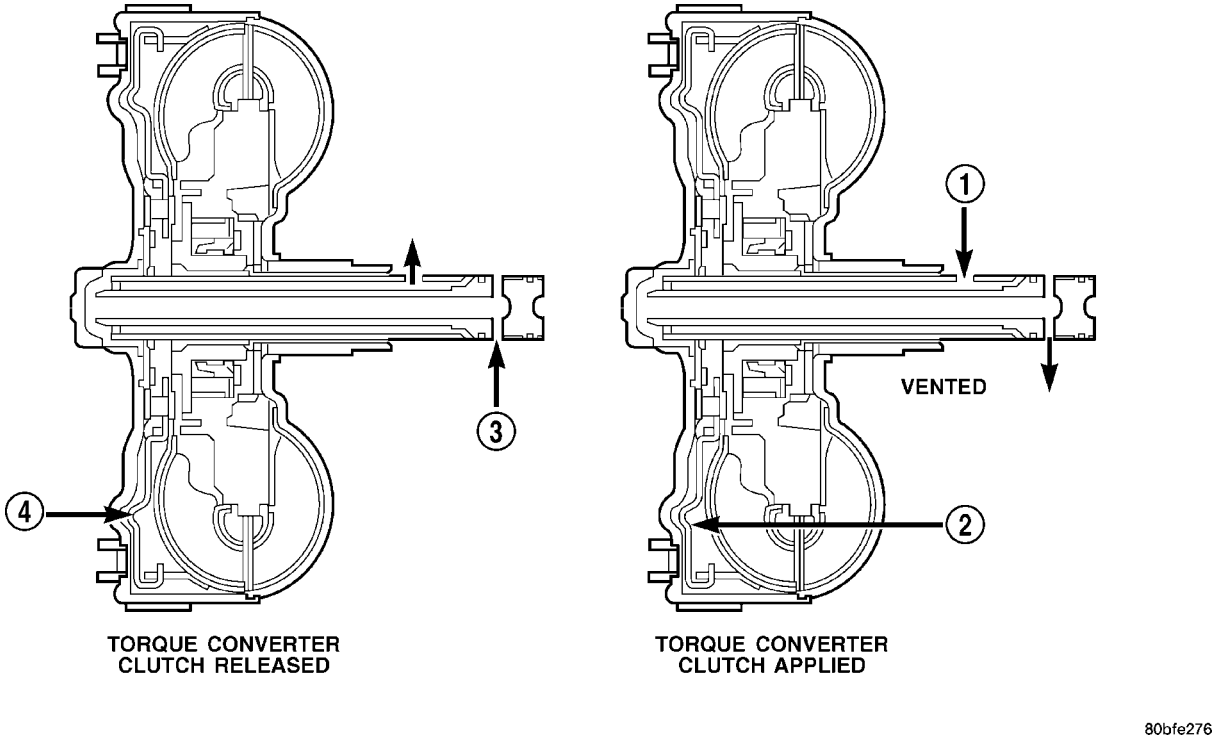

Fig. 315 Torque Converter Fluid Operation

1 - APPLY PRESSURE
2 - THE PISTON MOVES SLIGHTLY FORWARD
3 - RELEASE PRESSURE
4 - THE PISTON MOVES SLIGHTLY REARWARD

TORQUE CONVERTER (Continued)

TURBINE

As the fluid that was put into motion by the impeller blades strikes the blades of the turbine, some of the energy and rotational force is transferred into the turbine and the input shaft. This causes both of them (turbine and input shaft) to rotate in a clockwise direction following the impeller. As the fluid is leaving the trailing edges of the turbine's blades it continues in a "hindering" direction back toward the impeller. If the fluid is not redirected before it strikes the impeller, it will strike the impeller in such a direction that it would tend to slow it down.

STATOR

Torque multiplication is achieved by locking the stator's over-running clutch to its shaft (Fig. 316). Under stall conditions (the turbine is stationary), the oil leaving the turbine blades strikes the face of the stator blades and tries to rotate them in a counter-clockwise direction. When this happens the over–running clutch of the stator locks and holds the stator from rotating. With the stator locked, the oil strikes the stator blades and is redirected into a "helping" direction before it enters the impeller. This circulation of oil from impeller to turbine, turbine to stator, and stator to impeller, can produce a maximum torque multiplication of about 2.4:1. As the turbine begins to match the speed of the impeller, the fluid that was hitting the stator in such as way as to cause it to lock–up is no longer doing so. In this condition of operation, the stator begins to free wheel and the converter acts as a fluid coupling.

TORQUE CONVERTER CLUTCH (TCC)

In a standard torque converter, the impeller and turbine are rotating at about the same speed and the stator is freewheeling, providing no torque multiplication. By applying the turbine's piston to the front cover's friction material, a total converter engagement can be obtained. The result of this engagement is a direct 1:1 mechanical link between the engine and the transmission.

The engagement and disengagement of the TCC are automatic and controlled by the Powertrain Control Module (PCM). The engagement cannot be activated in the lower gears because it eliminates the torque multiplication effect of the torque converter necessary for acceleration. Inputs that determine clutch engagement are: coolant temperature, vehicle speed and throttle position. The torque converter clutch is engaged by the clutch solenoid on the valve body. The clutch will engage at approximately 56 km/h (35 mph) with light throttle, after the shift to third gear.

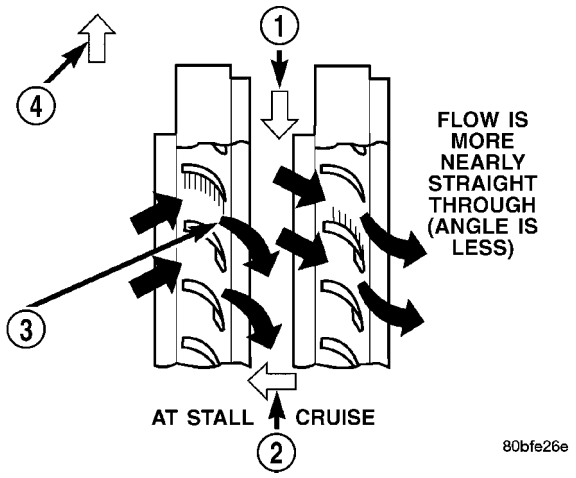

Fig. 316 Stator Operation

1 - DIRECTION STATOR WILL FREE WHEEL DUE TO OIL PUSHING ON BACKSIDE OF VANES
2 - FRONT OF ENGINE
3 - INCREASED ANGLE AS OIL STRIKES VANES
4 - DIRECTION STATOR IS LOCKED UP DUE TO OIL PUSHING AGAINST STATOR VANES

REMOVAL

(1) Remove transmission and torque converter from vehicle. (Refer to 21 - TRANSMISSION/TRANSAXLE/AUTOMATIC - 41TE - REMOVAL)

(2) Place a suitable drain pan under the converter housing end of the transmission.

CAUTION: Verify that transmission is secure on the lifting device or work surface, the center of gravity of the transmission will shift when the torque converter is removed creating an unstable condition. The torque converter is a heavy unit. Use caution when separating the torque converter from the transmission.

(3) Pull the torque converter forward until the center hub clears the oil pump seal.

(4) Separate the torque converter from the transmission.

TORQUE CONVERTER (Continued)

INSTALLATION

Check converter hub and drive notches for sharp edges, burrs, scratches, or nicks. Polish the hub and notches with 320/400 grit paper or crocus cloth if necessary. The hub must be smooth to avoid damaging the pump seal at installation.

(1) Lubricate converter hub and oil pump seal lip with transmission fluid.

(2) Place torque converter in position on transmission.

CAUTION: Do not damage oil pump seal or bushing while inserting torque converter into the front of the transmission.

(3) Align torque converter to oil pump seal opening.

(4) Insert torque converter hub into oil pump.

(5) While pushing torque converter inward, rotate converter until converter is fully seated in the oil pump gears.

(6) Check converter seating with a scale and straightedge (Fig. 317). Surface of converter lugs should be 1/2 in. to rear of straightedge when converter is fully seated.

(7) If necessary, temporarily secure converter with C-clamp attached to the converter housing.

(8) Install the transmission in the vehicle. (Refer to 21 - TRANSMISSION/TRANSAXLE/AUTOMATIC - 41TE - INSTALLATION)

(9) Fill the transmission with the recommended fluid. (Refer to 21 - TRANSMISSION/TRANSAXLE/AUTOMATIC - 41TE/FLUID - STANDARD PROCEDURE)

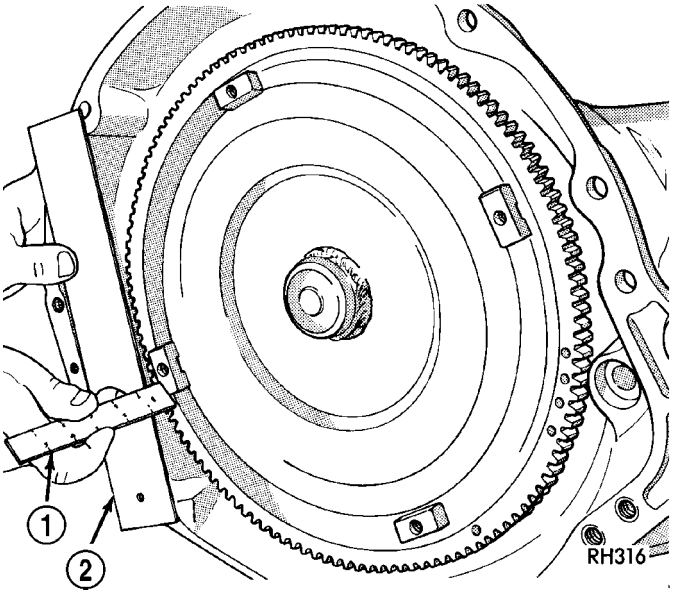

Fig. 317 Checking Torque Converter Seating

1 - SCALE
2 - STRAIGHTEDGE

TRANSMISSION CONTROL RELAY

DESCRIPTION

The transmission control relay (Fig. 318) is located in the Power Distribution Center (PDC), which is located on the left side of the engine compartment.

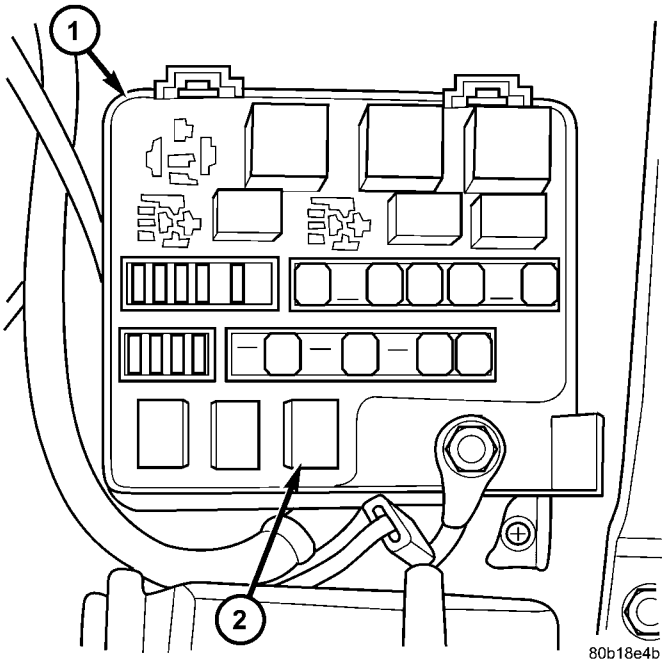

Fig. 318 Transmission Control Relay Location

1 - POWER DISTRIBUTION CENTER (PDC)
2 - TRANSMISSION CONTROL RELAY

OPERATION

The relay is supplied fused B+ voltage, energized by the PCM/TCM, and is used to supply power to the solenoid pack when the transmission is in normal operating mode. When the relay is “off”, no power is supplied to the solenoid pack and the transmission is in “limp-in” mode. After a controller reset (ignition key turned to the “run” position or after cranking engine), the PCM/TCM energizes the relay. Prior to this, the PCM/TCM verifies that the contacts are open by checking for no voltage at the switched battery terminals. After this is verified, the voltage at the solenoid pack pressure switches is checked. After the relay is energized, the PCM/TCM monitors the terminals to verify that the voltage is greater than 3 volts.

TRANSMISSION RANGE SENSOR

DESCRIPTION

The Transmission Range Sensor (TRS) is mounted to the top of the valve body inside the transaxle and can only be serviced by removing the valve body. The electrical connector extends through the transaxle case (Fig. 319).

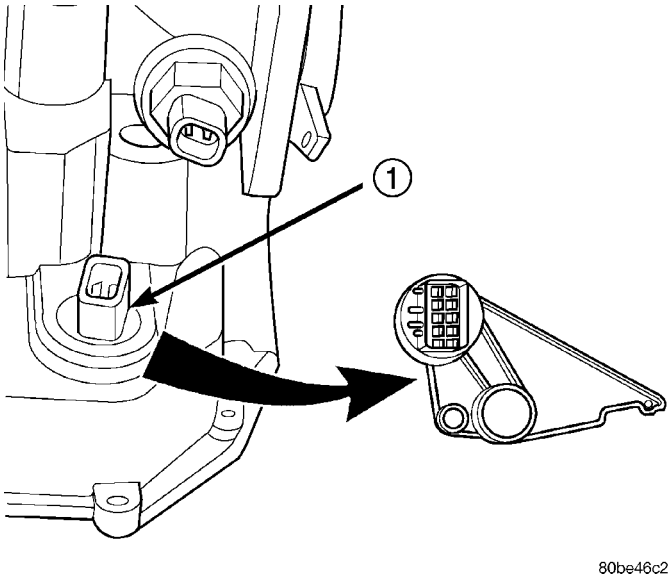

Fig. 319 Transmission Range Sensor (TRS) Location

1 - TRANSMISSION RANGE SENSOR

The Transmission Range Sensor (TRS) has four switch contacts that monitor shift lever position and send the information to the PCM/TCM.

The TRS also has an integrated temperature sensor (thermistor) that communicates transaxle temperature to the TCM and PCM (Fig. 320).

OPERATION

The Transmission Range Sensor (TRS) (Fig. 319) communicates shift lever position (SLP) to the PCM/TCM as a combination of open and closed switches. Each shift lever position has an assigned combination of switch states (open/closed) that the PCM/TCM receives from four sense circuits. The PCM/TCM interprets this information and determines the appropriate transaxle gear position and shift schedule.

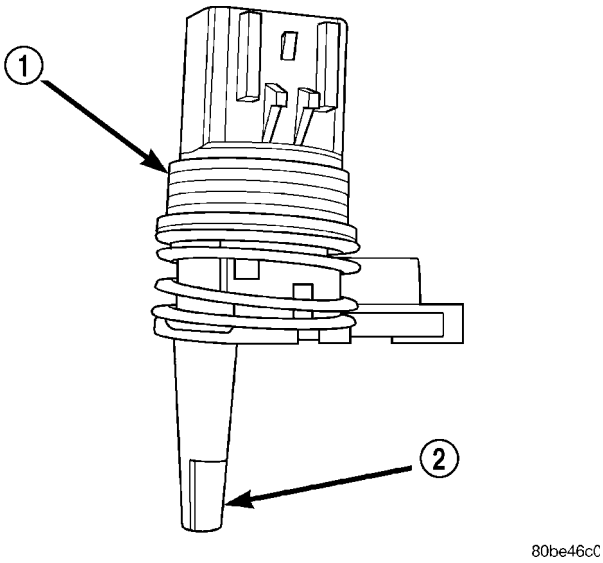

Fig. 320 Transmission Temperature Sensor

1 - TRANSMISSION RANGE SENSOR
2 - TEMPERATURE SENSOR

Since there are four switches, there are 16 possible combinations of open and closed switches (codes). Seven of these codes are related to gear position and three are recognized as “between gear” codes. This results in six codes which should never occur. These are called “invalid” codes. An invalid code will result in a DTC, and the PCM/TCM will then determine the shift lever position based on pressure switch data. This allows reasonably normal transmission operation with a TRS failure.

TRS SWITCH STATES

SLP	T42	T41	T3	T1
P	CL	CL	CL	OP
R	CL	OP	OP	OP
N	CL	CL	OP	CL
OD	OP	OP	OP	CL
3	OP	OP	CL	OP
L	CL	OP	CL	CL

TRANSMISSION RANGE SENSOR (Continued)

TRANSMISSION TEMPERATURE SENSOR

The TRS has an integrated thermistor (Fig. 320) that the PCM/TCM uses to monitor the transmission's sump temperature. Since fluid temperature can affect transmission shift quality and convertor lock up, the PCM/TCM requires this information to determine which shift schedule to operate in. The PCM also monitors this temperature data so it can energize the vehicle cooling fan(s) when a transmission "overheat" condition exists. If the thermistor circuit fails, the PCM/TCM will revert to calculated oil temperature usage.

CALCULATED TEMPERATURE

A failure in the temperature sensor or circuit will result in calculated temperature being substituted for actual temperature. Calculated temperature is a predicted fluid temperature which is calculated from a combination of inputs:

- Battery (ambient) temperature
- Engine coolant temperature
- In-gear run time since start-up

REMOVAL

(1) Remove valve body assembly from transaxle. (Refer to 21 - TRANSMISSION/TRANSAXLE/AUTOMATIC - 41TE/VALVE BODY - REMOVAL)

(2) Remove transmission range sensor retaining screw and remove sensor from valve body (Fig. 321).

(3) Remove TRS from manual shaft.

INSTALLATION

(1) Install transmission range sensor (TRS) to the valve body and torque retaining screw (Fig. 321) to 5 N·m (45 in. lbs.).

(2) Install valve body to transaxle. (Refer to 21 - TRANSMISSION/TRANSAXLE/AUTOMATIC - 41TE/VALVE BODY - INSTALLATION)

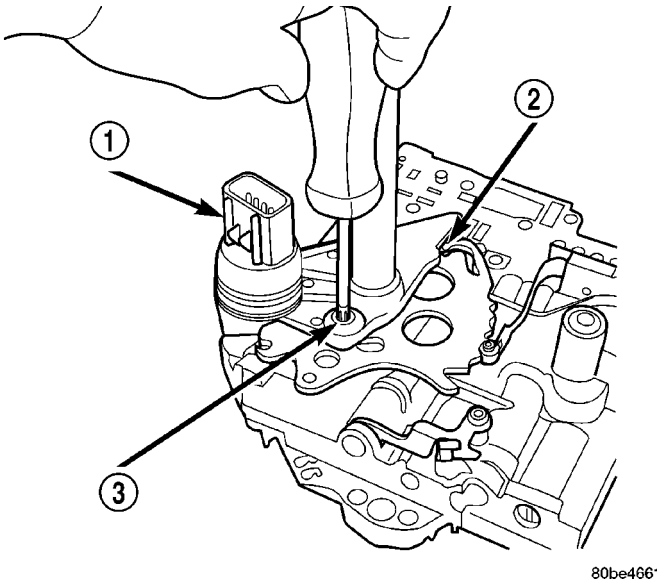

Fig. 321 Remove Transmission Range Sensor

1 - TRANSMISSION RANGE SENSOR
2 - MANUAL VALVE CONTROL PIN
3 - RETAINING SCREW

TRD LINK

DESCRIPTION

The Torque Reduction Link (TRD) is a wire between the PCM and TCM that is used by the TCM to request torque management. Torque management controls or reduces torque output of the engine during certain shift sequences, reducing torque applied to the transaxle clutches.

OPERATION

The torque management signal is basically a 12-volt pull-up supplied by the PCM to the TCM over the torque reduction link (TRD). Torque management is requested when the TCM pulses this signal to ground. The PCM recognizes this request and responds by retarding ignition timing, killing fuel injectors, etc. The PCM sends a confirmation of the request to the TCM via the communication bus. Torque reduction is not noticable by the driver, and usually lasts for a very short period of time.

If the confirmation signal is not received by the TCM after two sequential request messages, a diagnostic trouble code will be set.

VALVE BODY

DESCRIPTION

The valve body assembly consists of a cast aluminum valve body, a separator plate, and transfer plate. The valve body contains valves and check balls that control fluid delivery to the torque converter clutch, solenoid/pressure switch assembly, and frictional clutches. The valve body contains the following components (Fig. 322):

- Regulator valve
- Solenoid switch valve
- Manual valve
- Converter clutch switch valve
- Converter clutch control valve
- Torque converter regulator valve
- Low/Reverse switch valve

In addition, the valve body also contains the thermal valve, #2,3&4 check balls, the #5 (overdrive) check valve and the 2/4 accumulator assembly. (Refer to 21 - TRANSMISSION/TRANSAXLE/AUTOMATIC - 41TE/VALVE BODY - DISASSEMBLY)

OPERATION

NOTE: Refer to the Hydraulic Schematics for a visual aid in determining valve location, operation and design.

REGULATOR VALVE

The regulator valve controls hydraulic pressure in the transaxle. It receives unregulated pressure from the pump, which works against spring tension to maintain oil at specific pressures. A system of sleeves and ports allows the regulator valve to work at one of three predetermined pressure levels. Regulated oil pressure is also referred to as “line pressure.”

SOLENOID SWITCH VALVE

The solenoid switch valve controls line pressure from the LR/CC solenoid. In one position, it allows the low/reverse clutch to be pressurized. In the other, it directs line pressure to the converter control and converter clutch valves.

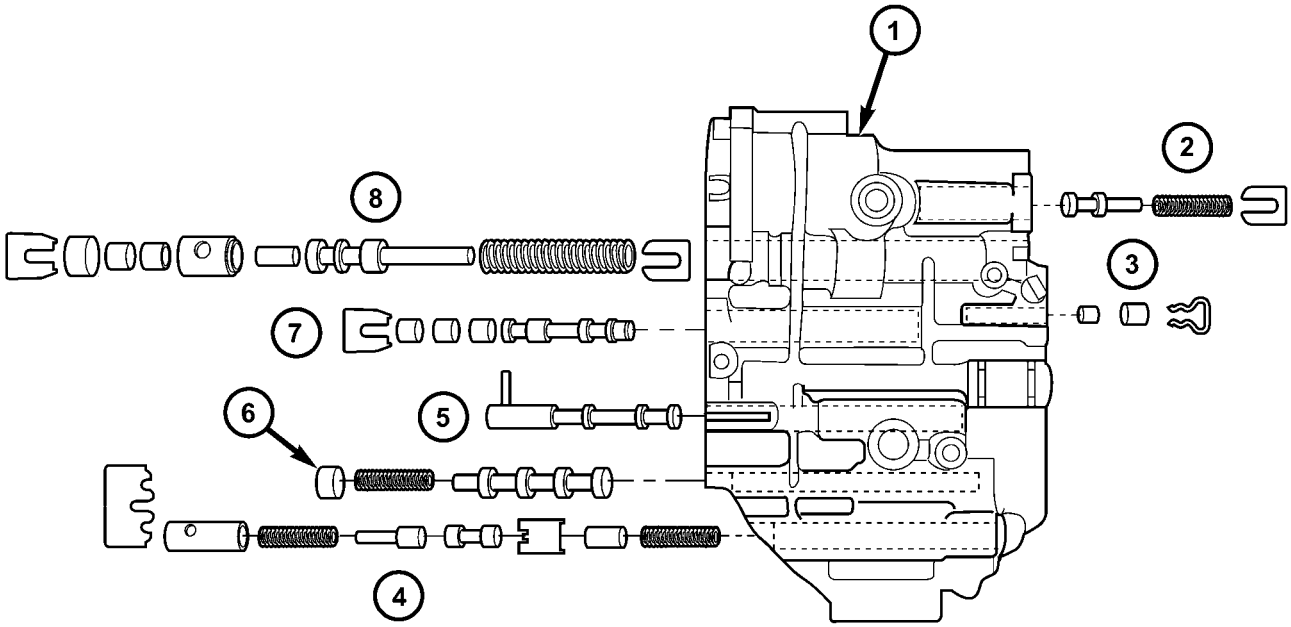

80865f21

Fig. 322 Valve Body Assembly

1 - VALVE BODY
2 - T/C REGULATOR VALVE
3 - L/R SWITCH VALVE
4 - CONVERTER CLUTCH CONTROL VALVE
5 - MANUAL VALVE
6 - CONVERTER CLUTCH SWITCH VALVE
7 - SOLENOID SWITCH VALVE
8 - REGULATOR VALVE

VALVE BODY (Continued)

MANUAL VALVE

The manual valve is operated by the mechanical shift linkage. Its primary responsibility is to send line pressure to the appropriate hydraulic circuits and solenoids. The valve has three operating ranges or positions.

CONVERTER CLUTCH SWITCH VALVE

The main responsibility of the converter clutch switch valve is to control hydraulic pressure applied to the front (off) side of the converter clutch piston. Line pressure from the regulator valve is fed to the torque converter regulator valve, where it passes through the valve, and is slightly regulated. The pressure is then directed to the converter clutch switch valve and to the front side of the converter clutch piston. This pressure pushes the piston back and disengages the converter clutch.

CONVERTER CLUTCH CONTROL VALVE

The converter clutch control valve controls the back (on) side of the torque converter clutch. When the PCM/TCM energizes or modulates the LR/CC solenoid to apply the converter clutch piston, both the converter clutch control valve and the converter control valve move, allowing pressure to be applied to the back side of the clutch.

T/C REGULATOR VALVE

The torque converter regulator valve slightly regulates the flow of fluid to the torque converter.

LOW/REVERSE SWITCH VALVE

The low/reverse clutch is applied from different sources, depending on whether low (1st) gear or reverse is selected. The low/reverse switch valve alternates positions depending on from which direction fluid pressure is applied. By design, when the valve is shifted by fluid pressure from one channel, the opposing channel is blocked. The switch valve alienates the possibility of a sticking ball check, thus providing consistent application of the low/reverse clutch under all operating conditions.

REMOVAL

NOTE: If valve body is replaced or reconditioned, the TCM Quick Learn Procedure must be performed. (Refer to 8 - ELECTRICAL/ELECTRONIC CONTROL MODULES/TRANSMISSION CONTROL MODULE - STANDARD PROCEDURE)

(1) Disconnect battery negative cable.
(2) Remove air cleaner assembly.
(3) Disconnect gearshift cable from manual valve lever.
(4) Remove manual valve lever from manual shaft.
(5) Disconnect transmission range sensor (TRS).
(6) Raise vehicle on hoist.
(7) Remove oil pan bolts (Fig. 323).

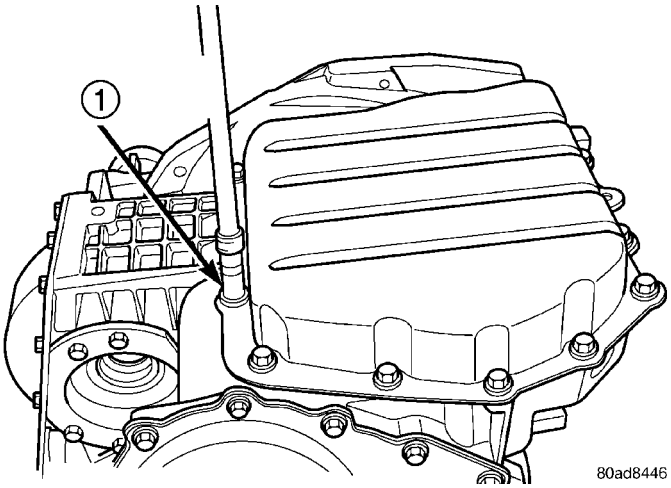

Fig. 323 Oil Pan Bolts

1 - OIL PAN BOLTS (USE RTV UNDER BOLT HEADS)

(8) Remove oil pan (Fig. 324).

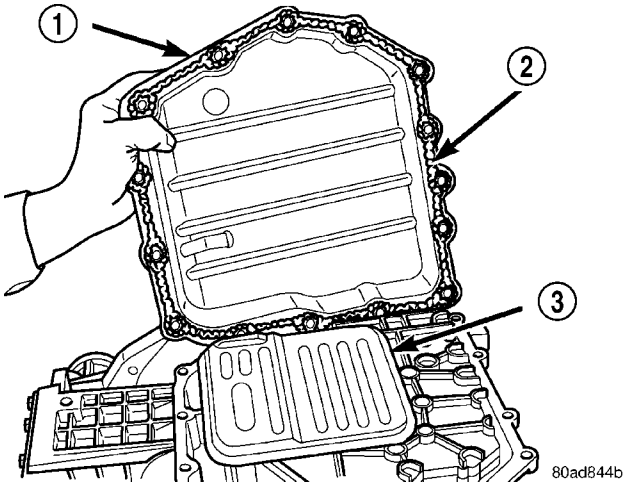

Fig. 324 Oil Pan

1 - OIL PAN
2 - 1/8 INCH BEAD OF RTV SEALANT
3 - OIL FILTER

VALVE BODY (Continued)

(9) Remove oil filter (Fig. 325).

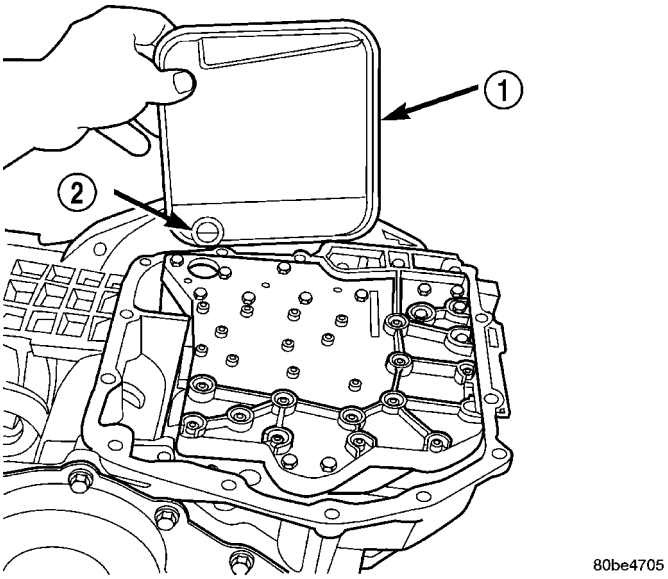

Fig. 325 Oil Filter

1 - OIL FILTER
2 - O-RING

(10) Remove the valve body-to-transaxle case bolts (Fig. 326).

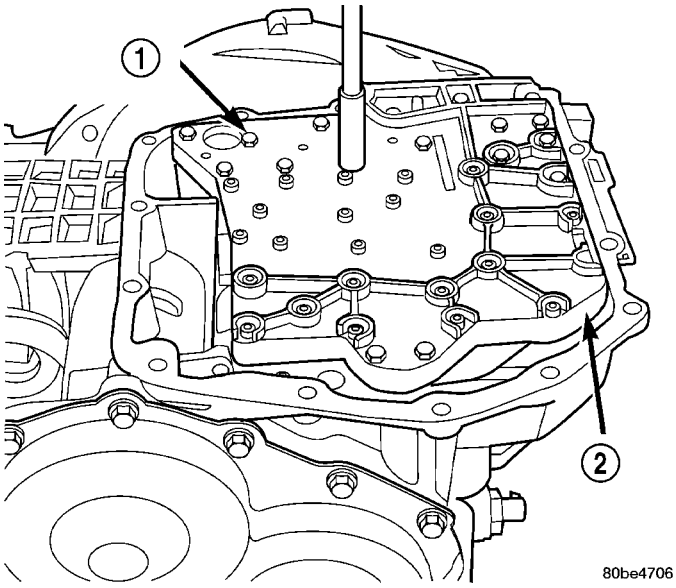

Fig. 326 Valve Body Attaching Bolts

1 - VALVE BODY ATTACHING BOLTS (18)
2 - VALVE BODY

NOTE: To ease removal of the valve body, turn the manual valve lever fully clockwise to low or first gear.

(11) Remove park rod rollers from guide bracket and remove valve body from transaxle (Fig. 327) (Fig. 328).

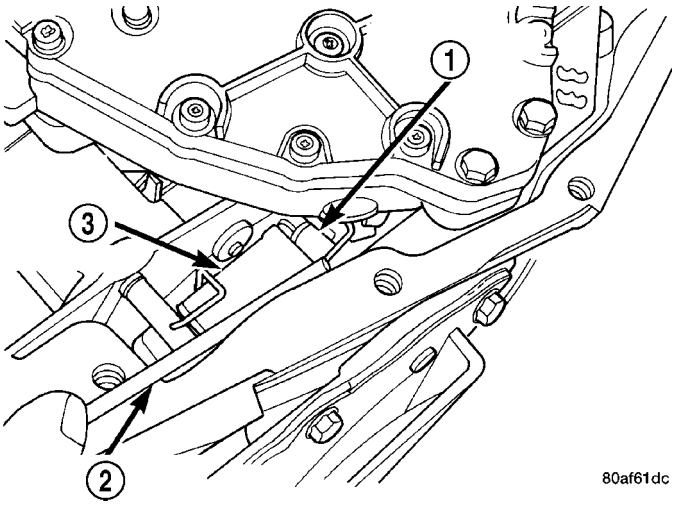

Fig. 327 Push Park Rod Rollers from Guide Bracket

1 - PARK SPRAG ROLLERS
2 - SCREWDRIVER
3 - PARK SPRAG GUIDE BRACKET

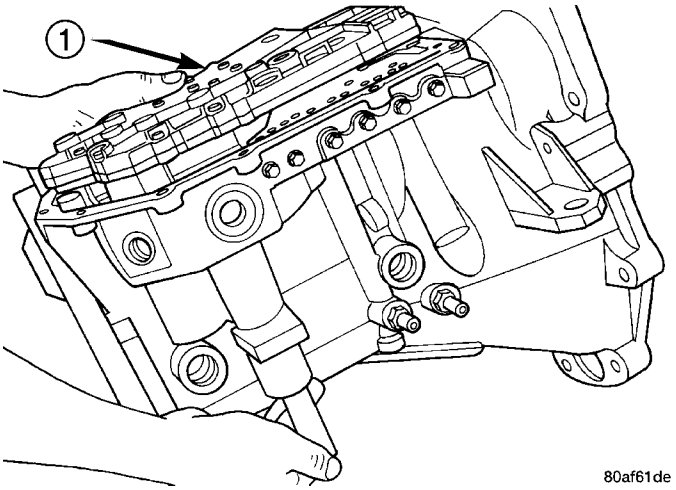

Fig. 328 Valve Body Removal/Installation

1 - VALVE BODY

CAUTION: The valve body manual shaft pilot may distort and bind the manual valve if the valve body is mishandled or dropped.

VALVE BODY (Continued)

DISASSEMBLY

NOTE: If valve body assembly is being reconditioned, the PCM/TCM Quick Learn Procedure must be performed. (Refer to 8 - ELECTRICAL/ELECTRONIC CONTROL MODULES/TRANSMISSION CONTROL MODULE - STANDARD PROCEDURE)

(1) Remove manual shaft seal (Fig. 329).

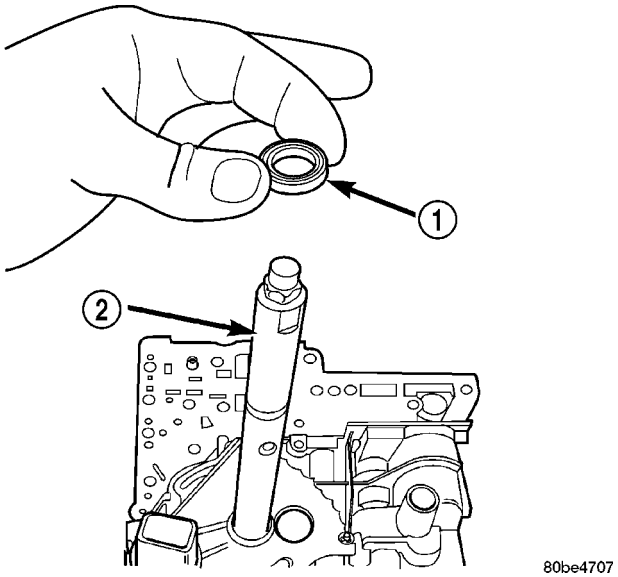

Fig. 329 Manual Shaft Seal

1 - SEAL
2 - MANUAL SHAFT

(2) Remove Transmission Range Sensor retaining screw (Fig. 330).

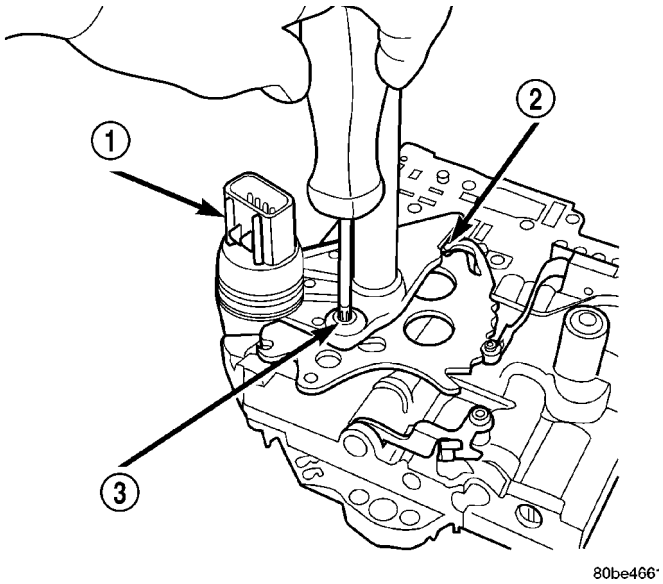

Fig. 330 Remove Transmission Range Sensor

1 - TRANSMISSION RANGE SENSOR
2 - MANUAL VALVE CONTROL PIN
3 - RETAINING SCREW

(3) Remove Manual Shaft/Rooster Comb and Transmission Range Sensor (Fig. 331).

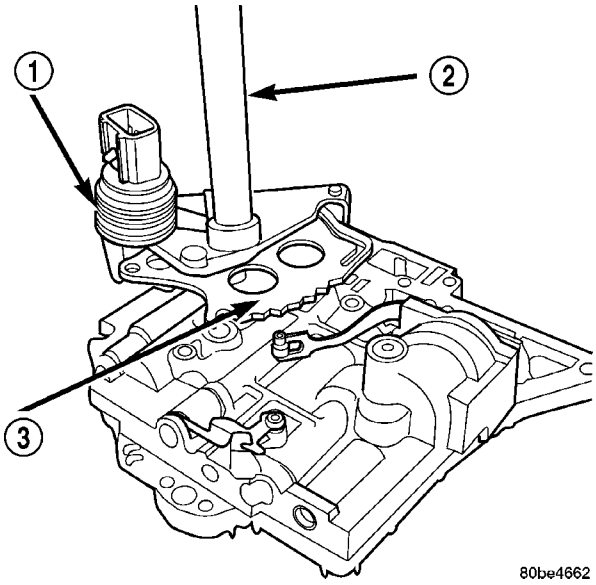

Fig. 331 Manual Shaft/Rooster Comb and Transmission Range Sensor

1 - TRANSMISSION RANGE SENSOR
2 - MANUAL SHAFT
3 - ROOSTER COMB

(4) Remove 2/4 Accumulator Retaining Plate (Fig. 332).

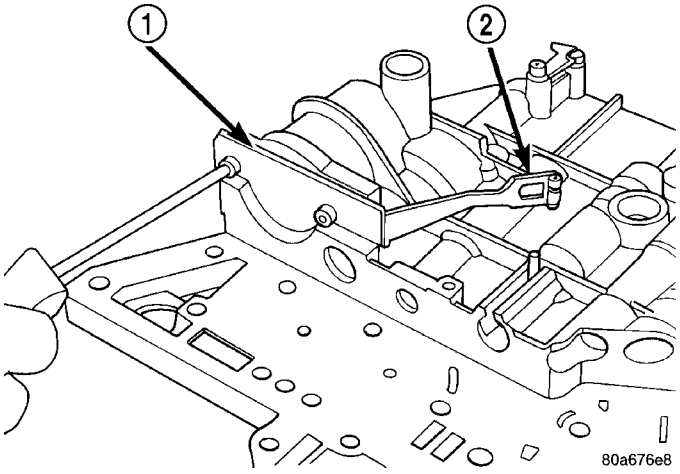

Fig. 332 2/4 Accumulator Retaining Plate

1 - 2–4 ACCUMULATOR RETAINING PLATE
2 - DETENT SPRING

VALVE BODY (Continued)

(5) Remove 2/4 Accumulator components as shown in (Fig. 333).

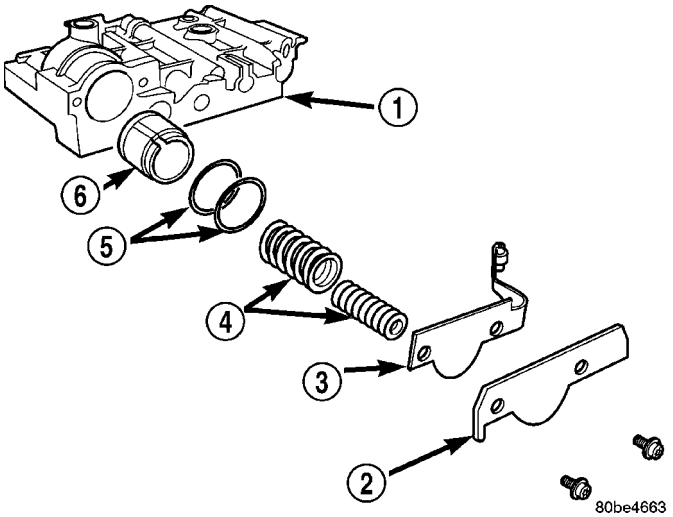

Fig. 333 2/4 Accumulator Assembly

1 - VALVE BODY
2 - RETAINER PLATE
3 - DETENT SPRING
4 - SPRINGS
5 - SEALS
6 - PISTON

(6) Remove Valve Body to Transfer Plate screws (Fig. 334).

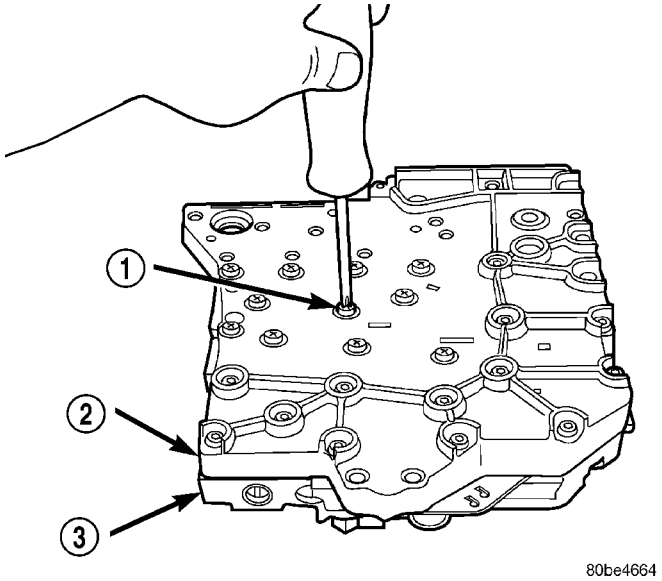

Fig. 334 Remove Valve Body to Transfer Plate Screws

1 - SCREW (24)
2 - TRANSFER PLATE
3 - VALVE BODY

(7) Invert assembly and remove Transfer Plate (Fig. 335). Beware of loose check balls.

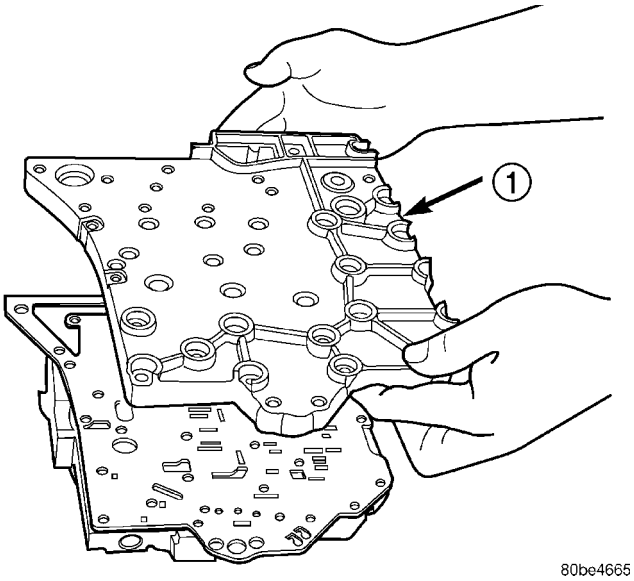

Fig. 335 Remove Transfer Plate

1 - TRANSFER PLATE

(8) Remove oil screen (Fig. 336).

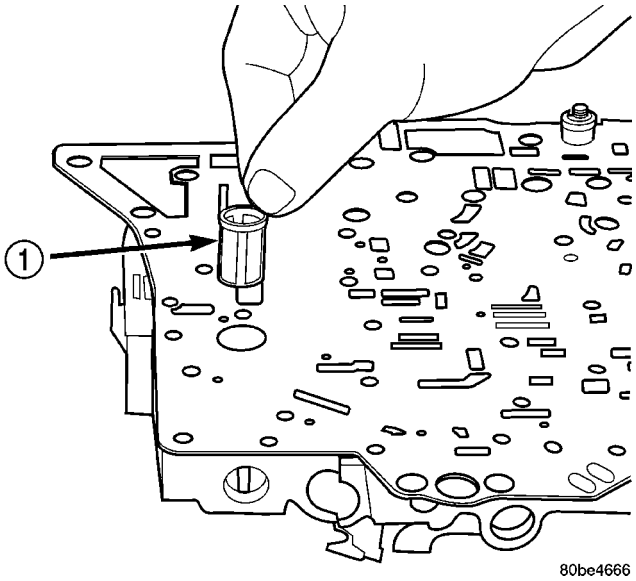

Fig. 336 Remove Oil Screen

1 - OIL SCREEN

VALVE BODY (Continued)

(9) Remove the overdrive clutch (#5) check valve (Fig. 337)

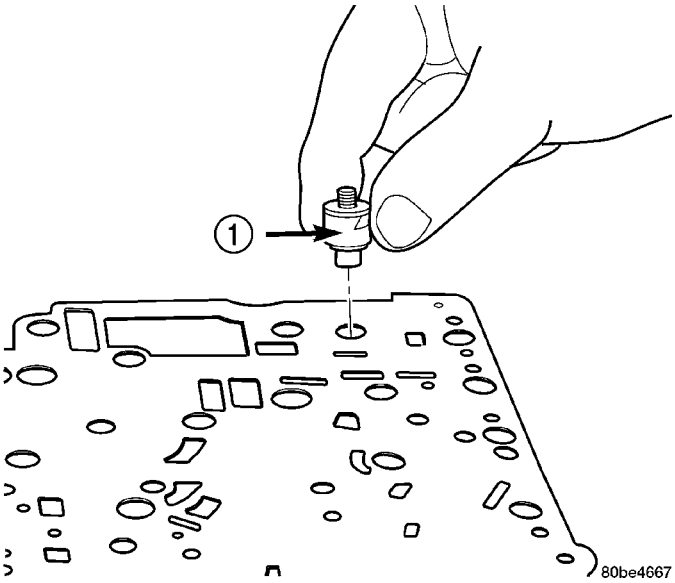

Fig. 337 Remove Overdrive Clutch (#5) Check Valve

1 - OVERDRIVE CLUTCH (#5) CHECK VALVE

(10) Remove separator plate (Fig. 338).

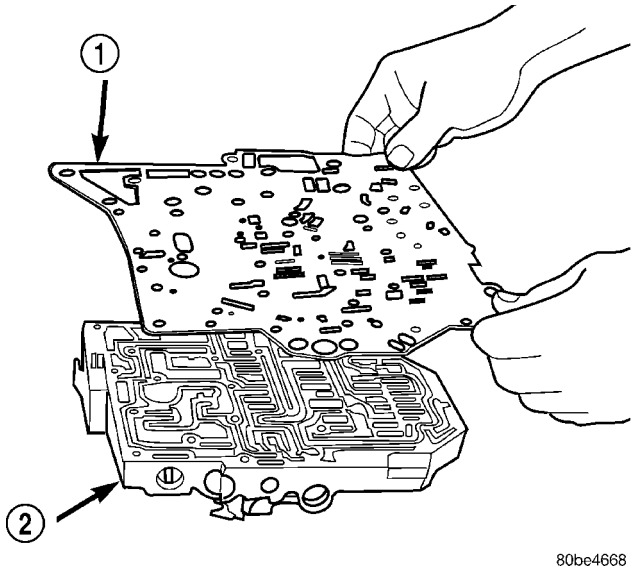

Fig. 338 Remove Separator Plate

1 - SEPARATOR PLATE
2 - VALVE BODY

(11) Remove thermal valve (Fig. 339).

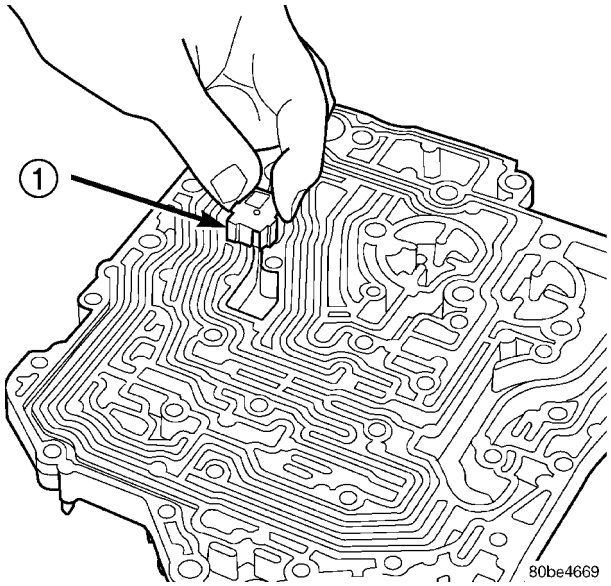

Fig. 339 Remove Thermal Valve

1 - THERMAL VALVE

(12) Remove check balls (Fig. 340).

NOTE: Tag all valve/spring assemblies for reassembly identification.

(13) Remove dual retainer plate using Tool 6301 (Fig. 341).

(14) Remove regulator valve spring retainer (Fig. 342).

VALVE BODY (Continued)

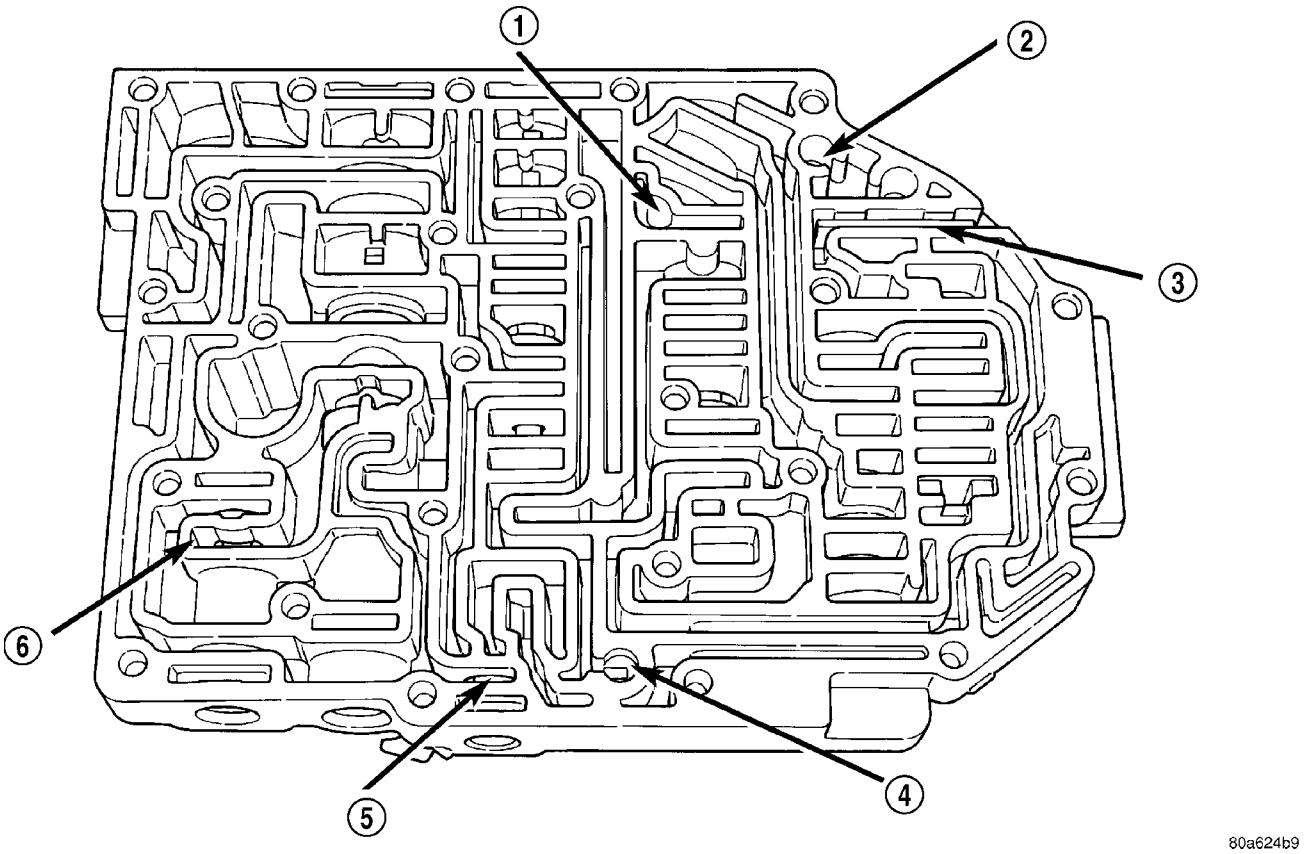

Fig. 340 Ball Check Location

1 - (#4) BALL CHECK LOCATION
2 - (#2) BALL CHECK LOCATION
3 - RETAINER
4 - (#3) BALL CHECK LOCATION
5 - LOW/REVERSE SWITCH VALVE
6 - T/C LIMIT VALVE

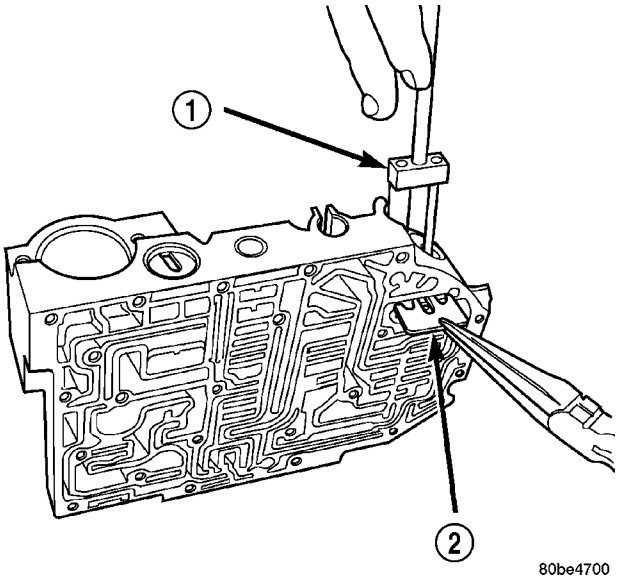

Fig. 341 Remove Dual Retainer Plate using Tool 6301

1 - TOOL 6301
2 - RETAINER

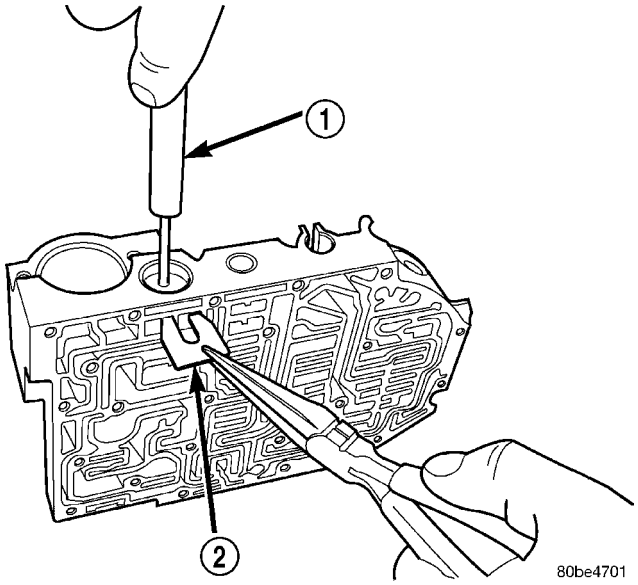

Fig. 342 Remove Regulator Valve Spring Retainer using Tool 6302

1 - TOOL 6302
2 - RETAINER

VALVE BODY (Continued)

(15) Remove remaining retainers as shown in (Fig. 343).

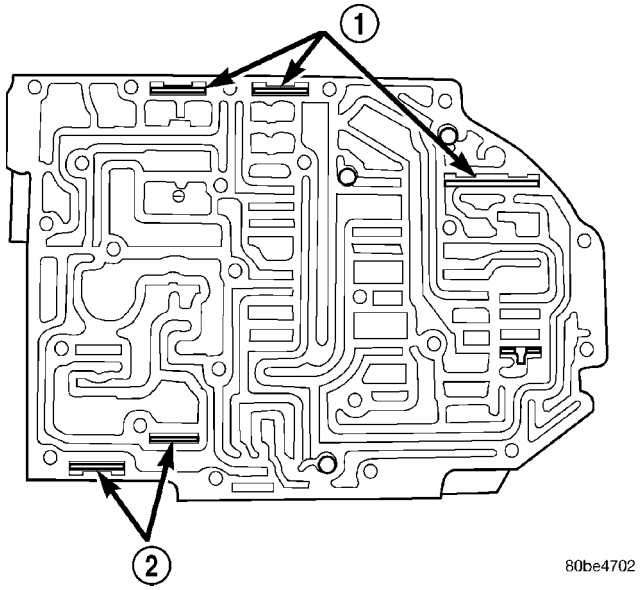

Fig. 343 Valve Retainer Location

1 - RETAINER
2 - RETAINER

(16) Remove valves and springs as shown in (Fig. 344).

NOTE: Refer to Valve Body Cleaning and Inspection for cleaning procedures.

ASSEMBLY

NOTE: If valve body assembly is reconditioned, the PCM/TCM Quick Learn Procedure must be performed. (Refer to 8 - ELECTRICAL/ELECTRONIC CONTROL MODULES/TRANSMISSION CONTROL MODULE - STANDARD PROCEDURE)

(1) Install valves and springs as shown in (Fig. 344).

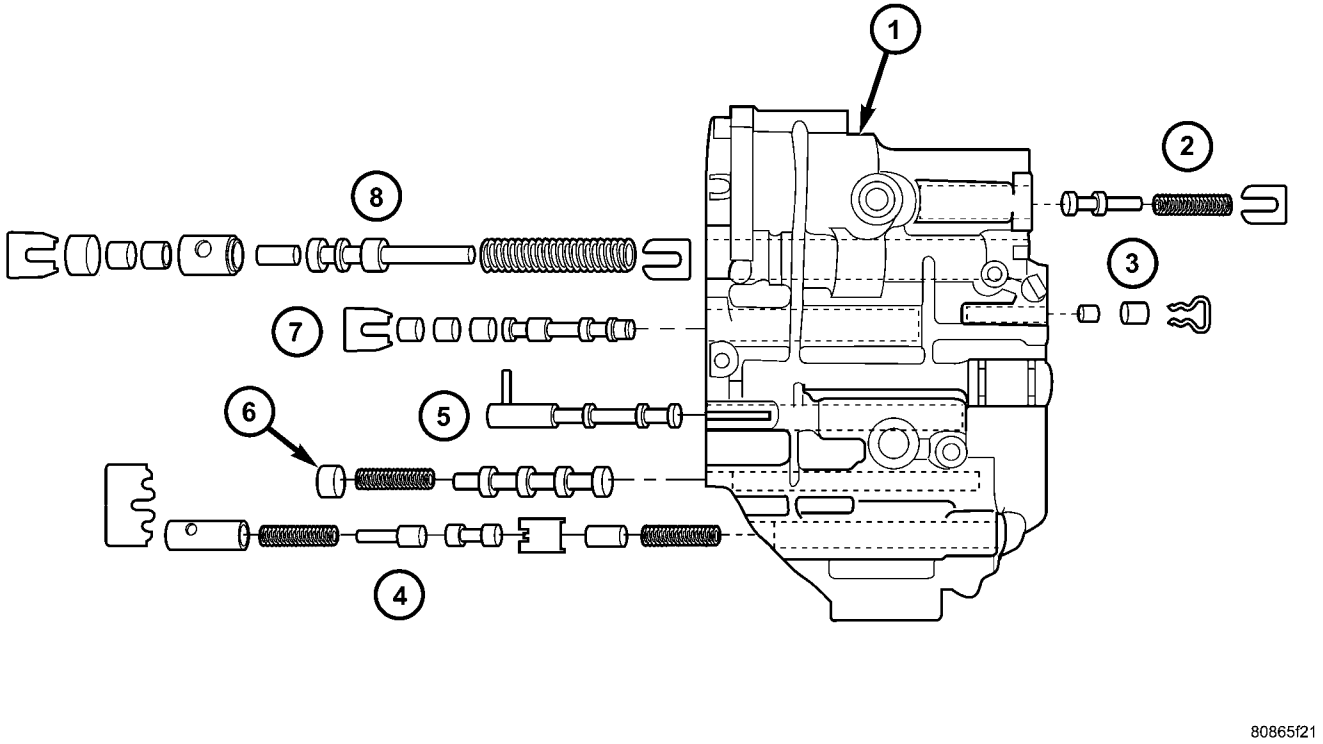

Fig. 344 Springs and Valves Location

1 - VALVE BODY
2 - T/C REGULATOR VALVE
3 - L/R SWITCH VALVE
4 - CONVERTER CLUTCH CONTROL VALVE
5 - MANUAL VALVE
6 - CONVERTER CLUTCH SWITCH VALVE
7 - SOLENOID SWITCH VALVE
8 - REGULATOR VALVE

VALVE BODY (Continued)

(2) Install regulator valve spring retainer (Fig. 345).

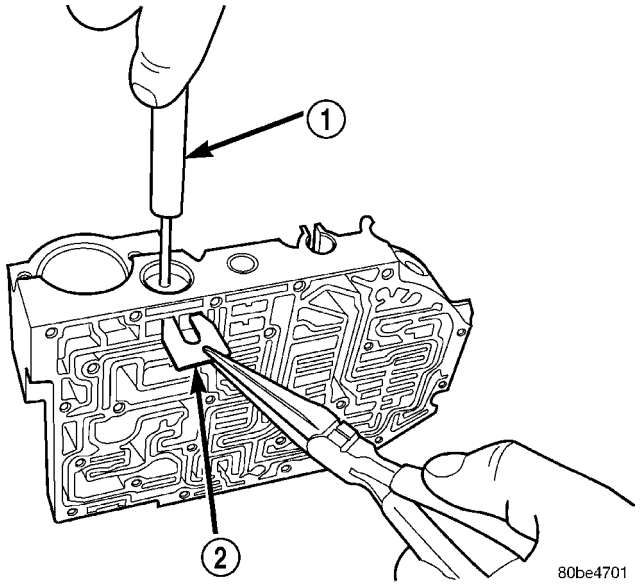

Fig. 345 Install Regulator Valve Spring Retainer using Tool 6302

1 - TOOL 6302
2 - RETAINER

(3) Install dual retainer plate using Tool 6301 (Fig. 346).

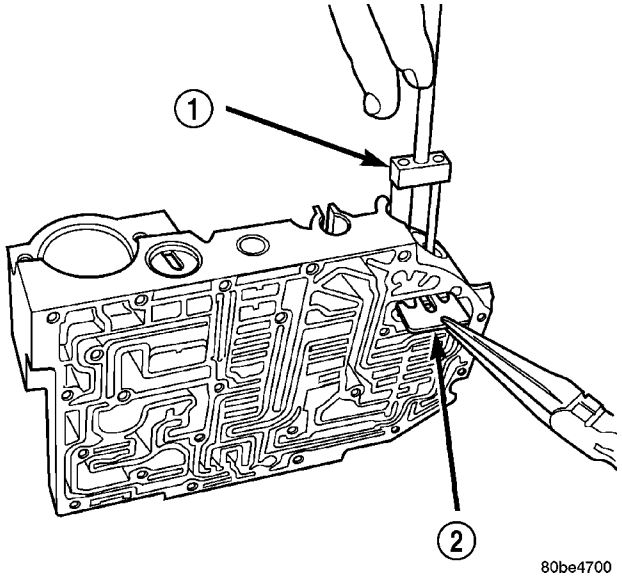

Fig. 346 Install Dual Retainer Plate using Tool 6301

1 - TOOL 6301
2 - RETAINER

(4) Verify that all retainers are installed as shown in (Fig. 347). Retainers should be flush or below valve body surface.

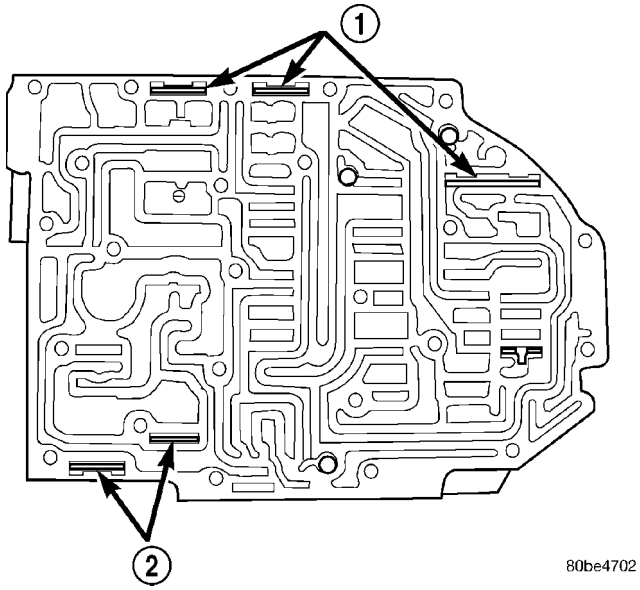

Fig. 347 Valve Retainer Location

1 - RETAINER
2 - RETAINER

(5) Install check balls into position as shown in (Fig. 348). If necessary, secure them with petrolatum or transmission assembly gel for assembly ease.

(6) Install thermal valve into transfer plate (Fig. 349).

(7) Install separator plate to valve body (Fig. 350).

VALVE BODY (Continued)

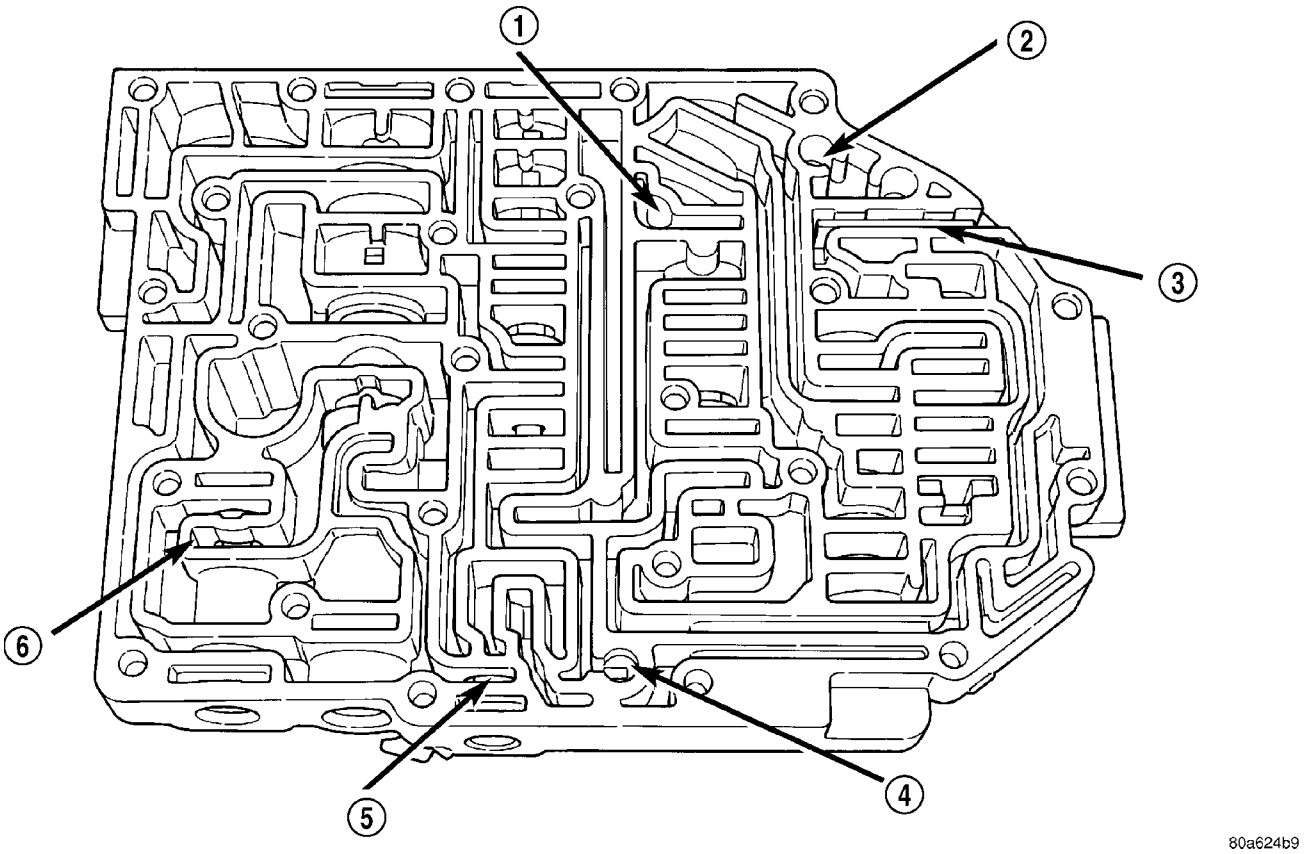

Fig. 348 Ball Check Location

1 - (#4) BALL CHECK LOCATION
2 - (#2) BALL CHECK LOCATION
3 - RETAINER
4 - (#3) BALL CHECK LOCATION
5 - LOW/REVERSE SWITCH VALVE
6 - T/C LIMIT VALVE

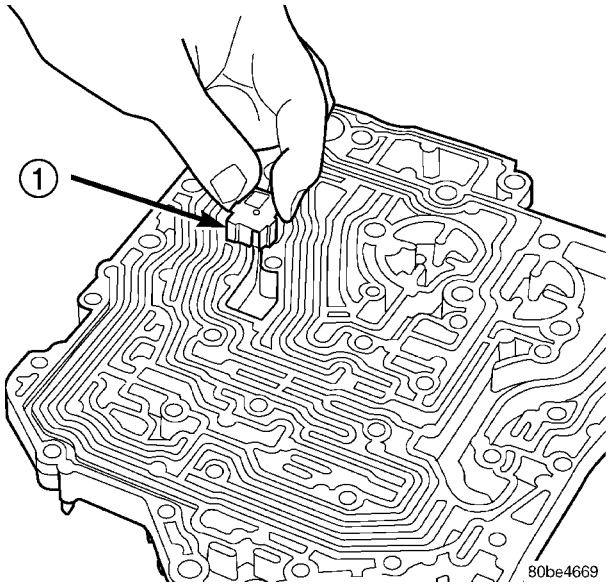

Fig. 349 Install Thermal Valve

1 - THERMAL VALVE

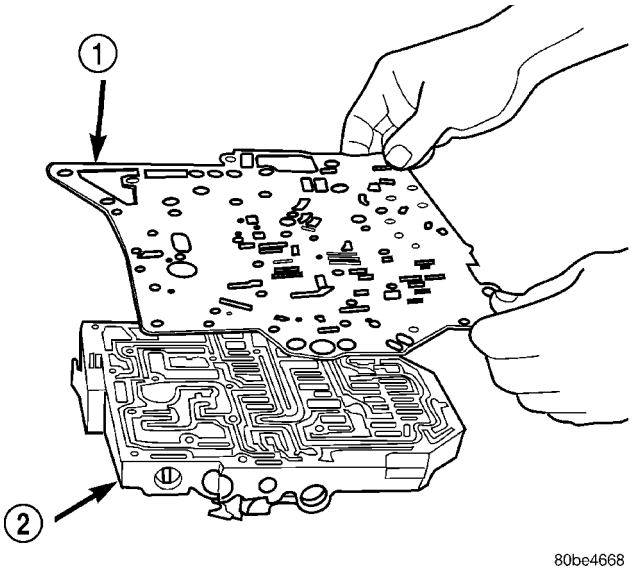

Fig. 350 Install Separator Plate

1 - SEPARATOR PLATE
2 - VALVE BODY

VALVE BODY (Continued)

(8) Install the overdrive clutch (#5) check valve to separator plate (Fig. 351)

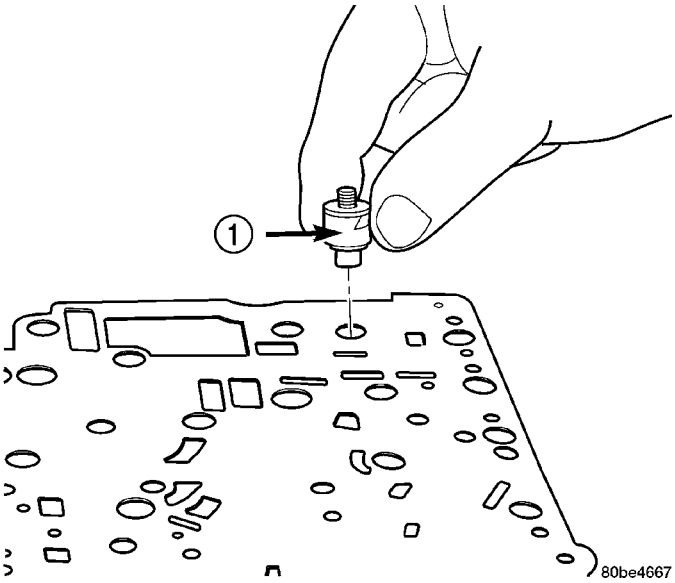

Fig. 351 Install Overdrive Clutch (#5) Check Valve

1 - OVERDRIVE CLUTCH (#5) CHECK VALVE

(9) Install oil screen to separator plate (Fig. 352).

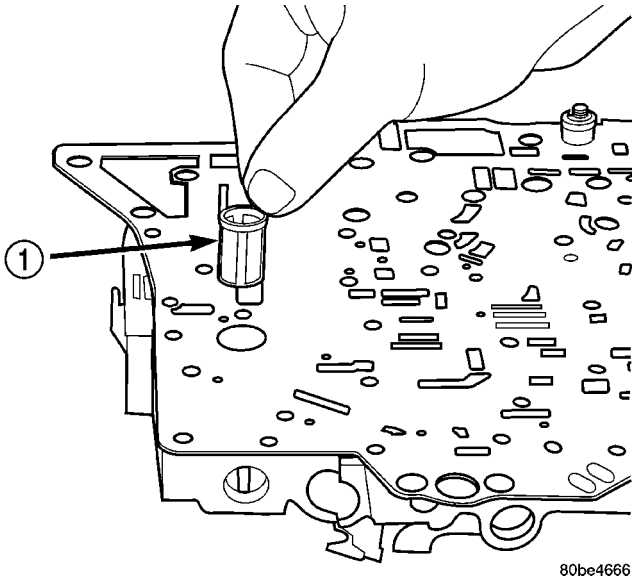

Fig. 352 Install Oil Screen

1 - OIL SCREEN

(10) Install transfer plate to valve body and separator plate. Make sure oil screen and #5 check valve do not bind (Fig. 353).

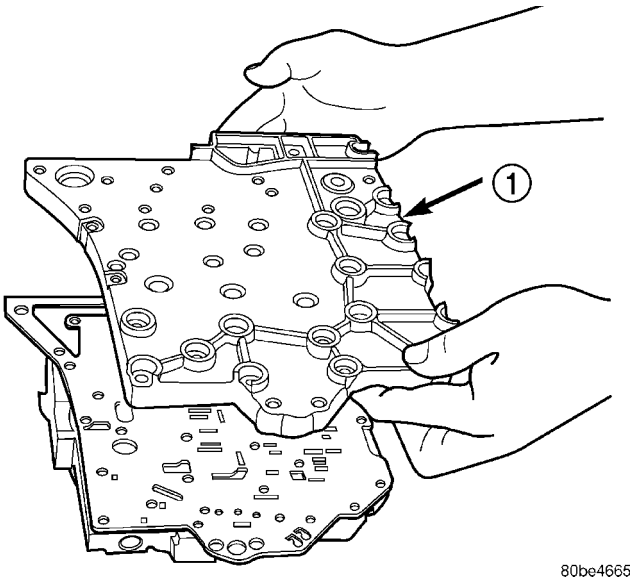

Fig. 353 Install Transfer Plate

1 - TRANSFER PLATE

(11) Install twenty-four transfer plate to valve body screws (Fig. 354) and torque to 5 N·m (45 in. lbs.).

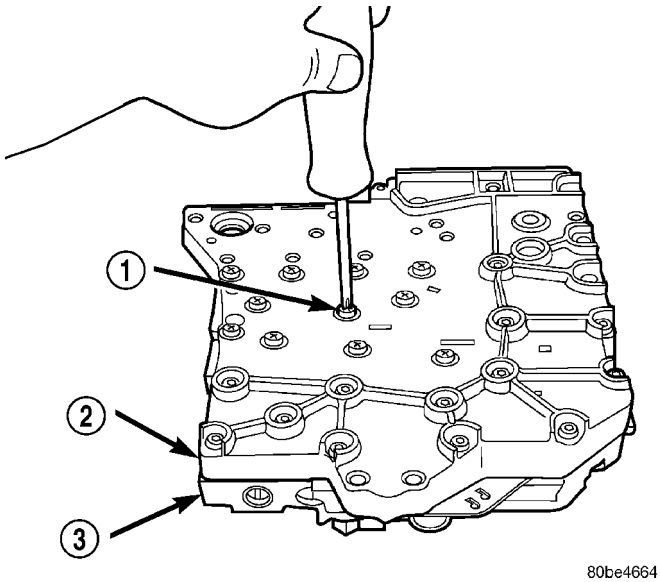

Fig. 354 Install Valve Body to Transfer Plate Screws

1 - SCREW (24)
2 - TRANSFER PLATE
3 - VALVE BODY

VALVE BODY (Continued)

(12) Install 2/4 Accumulator components as shown in (Fig. 355).

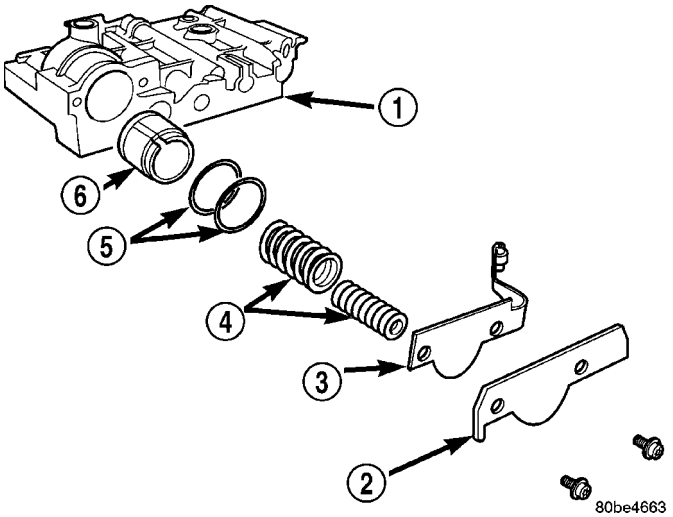

Fig. 355 2/4 Accumulator Assembly

1 - VALVE BODY
2 - RETAINER PLATE
3 - DETENT SPRING
4 - SPRINGS
5 - SEALS
6 - PISTON

(13) Torque 2/4 Accumulator retainer to 5 N·m (45 in. lbs.) (Fig. 356).

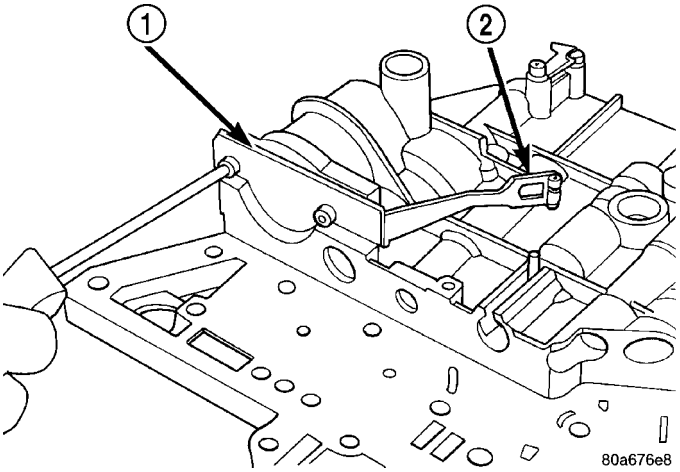

Fig. 356 2/4 Accumulator Retaining Plate

1 - 2–4 ACCUMULATOR RETAINING PLATE
2 - DETENT SPRING

(14) Install Manual Shaft/Rooster Comb and Transmission Range Sensor (Fig. 357).

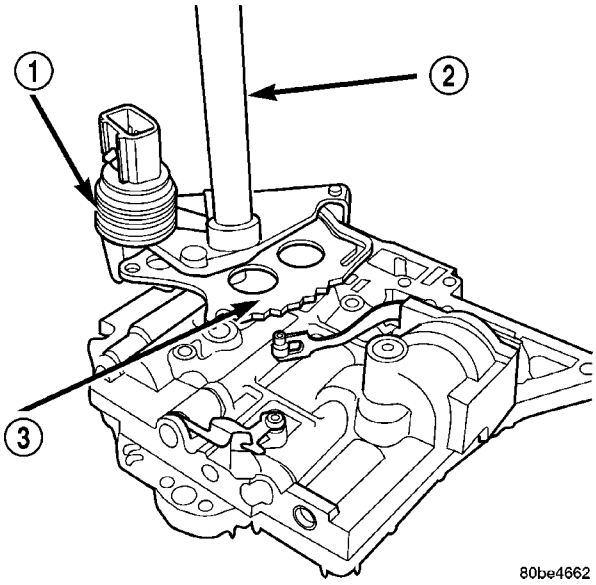

Fig. 357 Install Manual Shaft/Rooster Comb and Transmission Range Sensor

1 - TRANSMISSION RANGE SENSOR
2 - MANUAL SHAFT
3 - ROOSTER COMB

(15) Make sure Manual Valve control pin is contained within the rooster comb slot (Fig. 358). Install Transmission Range Sensor retaining screw (Fig. 358) and torque to 5 N·m (45 in. lbs.).

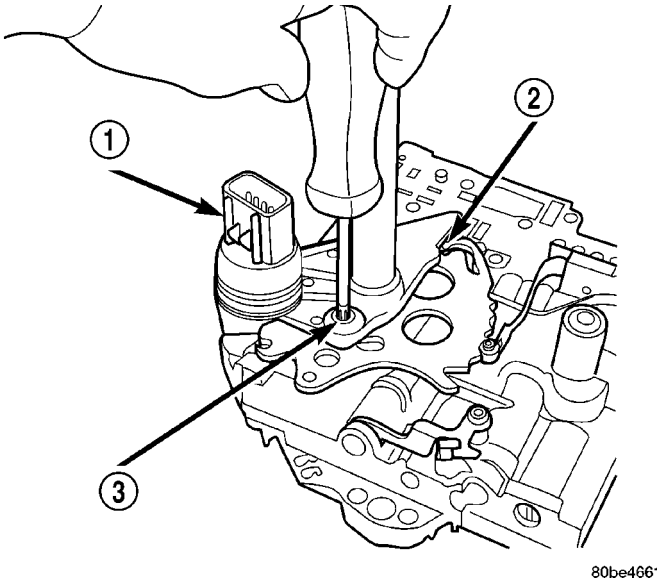

Fig. 358 Install Transmission Range Sensor Retaining Screw

1 - TRANSMISSION RANGE SENSOR
2 - MANUAL VALVE CONTROL PIN
3 - RETAINING SCREW

VALVE BODY (Continued)

(16) Install manual shaft seal (Fig. 359).

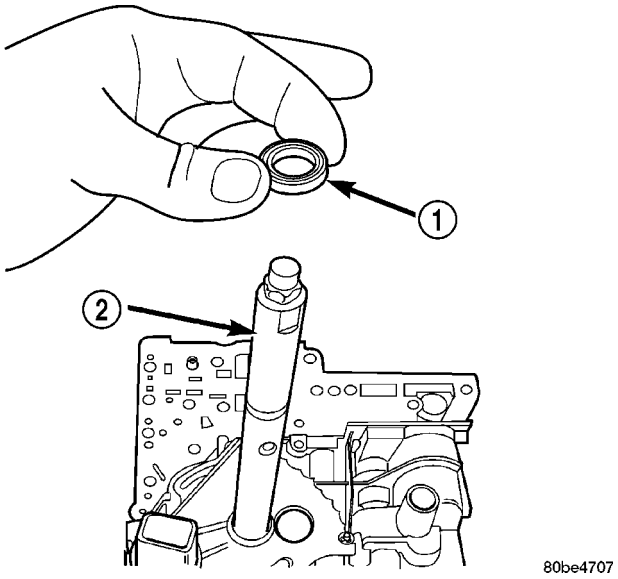

Fig. 359 Manual Shaft Seal

1 - SEAL
2 - MANUAL SHAFT

INSTALLATION

NOTE: If valve body assembly is being replaced or reconditioned, it is necessary to perform the TCM Quick Learn Procedure. (Refer to 8 - ELECTRICAL/ ELECTRONIC CONTROL MODULES/TRANSMISSION CONTROL MODULE - STANDARD PROCEDURE)

(1) Install valve body assembly to transaxle (Fig. 360). Install and torque valve body-to-transaxle case bolts (Fig. 361) to 12 N·m (105 in. lbs.).

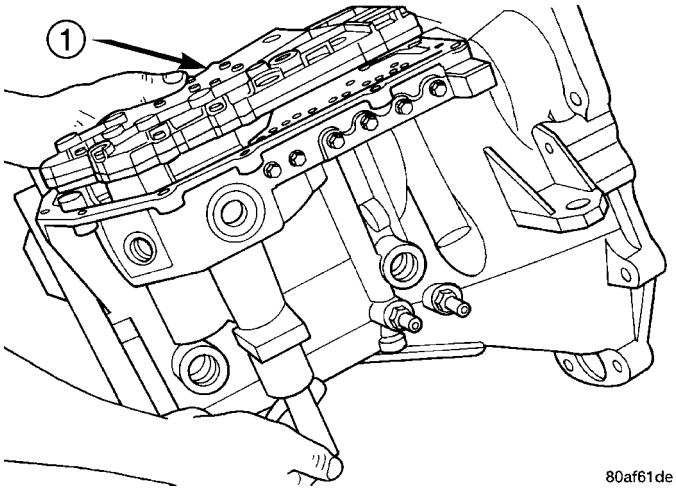

Fig. 360 Valve Body Removal/Installation

1 - VALVE BODY

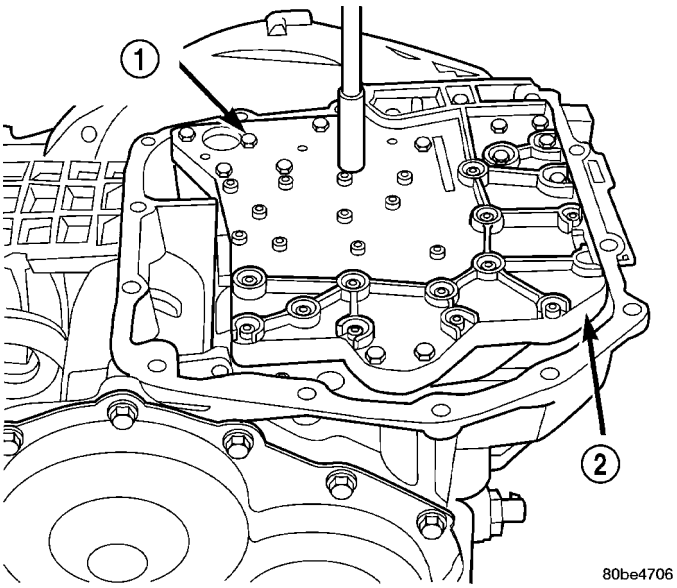

Fig. 361 Valve Body Attaching Bolts

1 - VALVE BODY ATTACHING BOLTS (18)
2 - VALVE BODY

(2) Install transaxle oil filter (Fig. 362). Inspect the o-ring and replace if necessary.

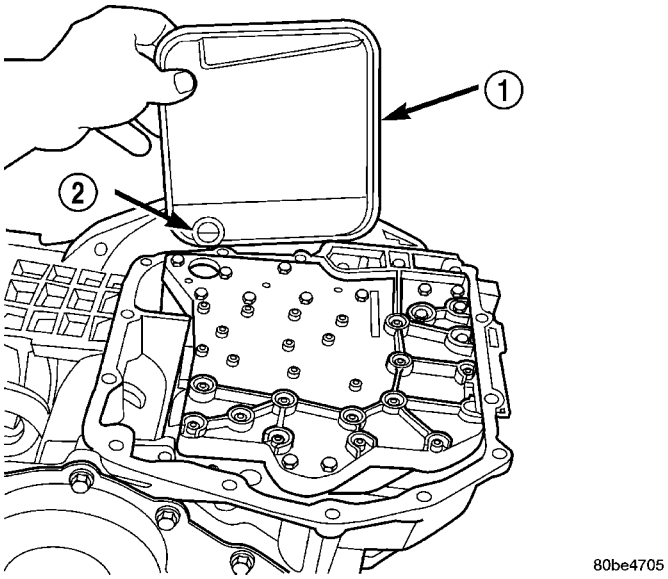

Fig. 362 Oil Filter

1 - OIL FILTER
2 - O-RING

VALVE BODY (Continued)

(3) Ensure the transaxle oil pan and transaxle case sealing surfaces are clean and dry. Install an 1/8” bead of Mopar® ATF RTV (MS-GF41) to the oil pan and install (Fig. 363). Torque oil pan-to-transaxle case bolts (Fig. 364) to 19 N·m (165 in. lbs.).

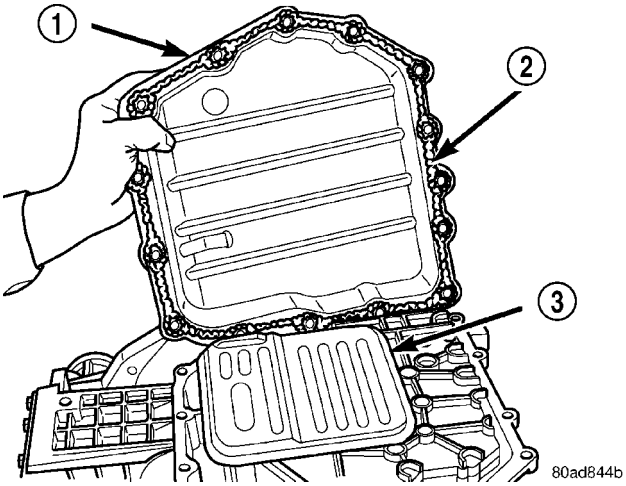

Fig. 363 Oil Pan

1 - OIL PAN
2 - 1/8 INCH BEAD OF MOPAR ATF RTV (MS-GF41)
3 - OIL FILTER

(4) Lower vehicle.
(5) Connect transmission range sensor connector.

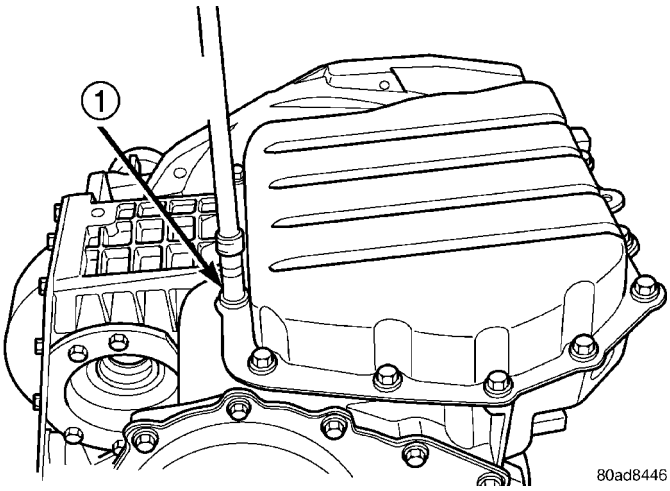

Fig. 364 Oil Pan Bolts

1 - OIL PAN BOLTS (USE RTV UNDER BOLT HEADS)

(6) Install manual valve lever to manual shaft.
(7) Install gearshift cable to manual valve lever.
(8) Connect battery negative cable.
(9) Fill transaxle with Mopar® ATF +4 Transmission fluid. (Refer to 21 - TRANSMISSION/TRANSAXLE/AUTOMATIC - 41TE/FLUID - STANDARD PROCEDURE)

TIRES/WHEELS

TABLE OF CONTENTS

page

TIRES/WHEELS
DIAGNOSIS AND TESTING - TIRE AND WHEEL VIBRATION 1
STANDARD PROCEDURE
STANDARD PROCEDURE - TIRE AND WHEEL BALANCE 5
STANDARD PROCEDURE - TIRE AND WHEEL MATCH MOUNTING 6
STANDARD PROCEDURE - TIRE AND WHEEL ROTATION 7
REMOVAL - TIRE AND WHEEL ASSEMBLY 7
INSTALLATION - TIRE AND WHEEL ASSEMBLY 7
TIRES
DESCRIPTION
DESCRIPTION - TIRE 8
DESCRIPTION - RADIAL-PLY TIRES 9
DESCRIPTION - REPLACEMENT TIRES 9
DESCRIPTION - SPARE TIRE (TEMPORARY) 9
DIAGNOSIS AND TESTING
DIAGNOSIS AND TESTING - TIRE NOISE 9
DIAGNOSIS AND TESTING - TIRE/VEHICLE LEAD 9
DIAGNOSIS AND TESTING - TIRE WEAR PATTERNS 9
DIAGNOSIS AND TESTING - TREAD WEAR INDICATORS 10
STANDARD PROCEDURE
STANDARD PROCEDURE - TIRE INFLATION PRESSURES 10
STANDARD PROCEDURE - TIRE PRESSURE FOR HIGH SPEED OPERATION 11
STANDARD PROCEDURE - TIRE LEAK REPAIRING 11
CLEANING - TIRES 11
WHEELS
DESCRIPTION 12
DIAGNOSIS AND TESTING - WHEEL INSPECTION 12
CLEANING - ALUMINUM WHEEL CARE 12
SPECIFICATIONS
WHEEL 13
WHEEL MOUNTING STUDS - FRONT
REMOVAL 13
INSTALLATION 13
WHEEL MOUNTING STUDS - REAR
REMOVAL 14
INSTALLATION 14

TIRES/WHEELS

DIAGNOSIS AND TESTING - TIRE AND WHEEL VIBRATION

Tire and wheel imbalance, runout and force variation can cause vehicles to exhibit steering wheel vibration.

VISUAL INSPECTION

Visual inspection of the vehicle is recommended prior to road testing or performing any other procedure. Raise vehicle on a suitable hoist. (Refer to LUBRICATION & MAINTENANCE/HOISTING - STANDARD PROCEDURE)

Inspect for the following:

- Verify correct (OEM) wheel and tire, as well as correct wheel weights. Aluminum wheels require unique wheel weights. They are designed to fit the contour of the wheel (Fig. 1).
- Inspect tires and wheels for damage, mud packing and unusual wear; correct as necessary.
- Check and adjust tire air pressure to the pressure listed on the label attached to the rear face of the driver's door.

ROAD TEST

Road test vehicle on a smooth road for a least five miles to warm tires (remove any flat spots). Lightly place hands on steering wheel at the 10:00 and 2:00 positions while slowly sweeping up and down from 90 to 110 km/h (55 to 70 mph) where legal speed limits allow.

Observe the steering wheel for:

- Visual Nibble (oscillation: clockwise/counterclockwise, usually due to tire imbalance)
- Visual Buzziness (high frequency, rapid vibration up and down)

To rule out vibrations due to brakes or powertrain:

- Lightly apply brakes at speed; if vibration occurs or is enhanced, vibration is likely due to causes other than tire and wheel assemblies.
- Shift transmission into neutral while vibration is occurring; if vibration is eliminated, vibration is

TIRES/WHEELS (Continued)

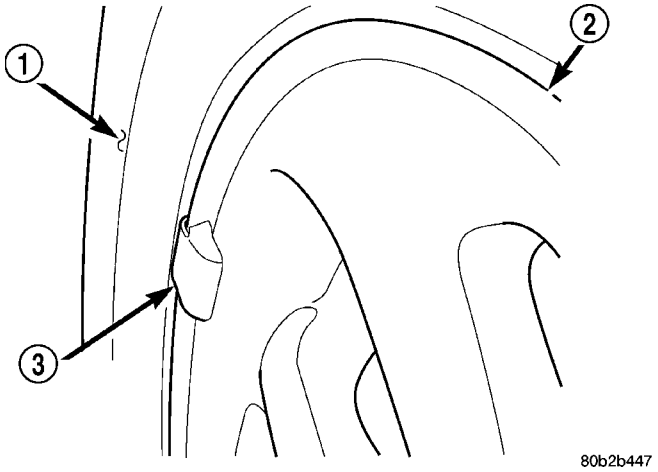

Fig. 1 Aluminum Wheel Weight

1 - TIRE
2 - WHEEL
3 - WHEEL WEIGHT

likely due to causes other than tire and wheel assemblies.

For brake vibrations, (Refer to 5 - BRAKES - BASE/HYDRAULIC/MECHANICAL/ROTORS - DIAGNOSIS AND TESTING).

For powertrain vibrations, (Refer to 3 - DIFFERENTIAL & DRIVELINE - DIAGNOSIS AND TESTING).

For tire and wheel assembly vibrations, continue with this diagnosis and testing procedure.

TIRE AND WHEEL BALANCE

(1) Balance the tire and wheel assemblies as necessary following the wheel balancer manufacturer's instructions and using the information listed in Standard Procedure - Tire And Wheel Balance. (Refer to 22 - TIRES/WHEELS - STANDARD PROCEDURE)

(2) Road test the vehicle for at least 5 miles, following the format described in Road Test.

(3) If the vibration persists, continue with this diagnosis and testing procedure.

TIRE AND WHEEL RUNOUT/MATCH MOUNTING

(1) **System Radial Runout.** This on-the-vehicle system check will measure the radial runout including the hub, wheel and tire.

(a) Raise vehicle so tires clear floor. (Refer to LUBRICATION & MAINTENANCE/HOISTING - STANDARD PROCEDURE)

(b) Apply masking tape around the circumference of the tire in the locations to be measured (Fig. 2). Do not overlap the tape.

(c) Check system runout using Dial Indicator Set, Special Tool C-3339A with 25-W wheel, or equivalent. Place the end of the indicator against each taped area (one at a time) (Fig. 2) and rotate the tire and wheel. System radial runout should not exceed 0.76 mm (0.030 inch) with no tread "dips" or "steps." Tread "dips" and "steps" can be identified by spikes of the dial indicator gauge.

- Tread ″dips″; Rapid decrease then increase in dial indicator reading over 101.6 mm (4.0 inch) of tread circumference.
- Tread ″steps″; Rapid decrease or increase in dial indicator reading over 101.6 mm (4.0 inch) of tread circumference.

(d) If system runout is excessive, re-index the tire and wheel assembly on the hub. Remove assembly from vehicle and install it back on the hub two studs over from original mounting position. If re-indexing the tire and wheel assembly corrects or reduces system runout, check hub runout and repair as necessary (Refer to 5 - BRAKES - BASE/HYDRAULIC/MECHANICAL/ROTORS - DIAGNOSIS AND TESTING).

(e) If system runout is still excessive, continue with this diagnosis and testing procedure.

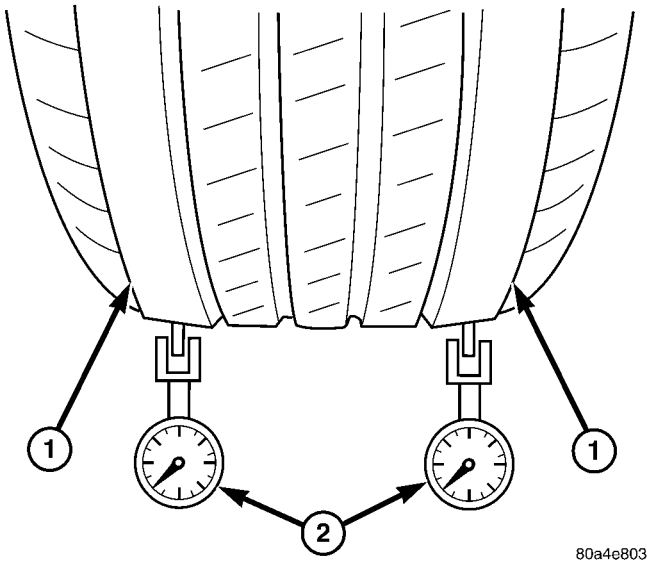

Fig. 2 Radial Runout Measurement

1 - MASKING TAPE
2 - DIAL INDICATOR

(2) **Tire and Wheel Assembly Radial Runout.** This radial runout check is performed with the tire and wheel assembly off the vehicle.

(a) Remove tire and wheel assembly from vehicle and install it on a suitable wheel balancer.

(b) Check system runout using Dial Indicator Set, Special Tool C-3339A with 25-W wheel, or equivalent. Place the end of the indicator against each taped area (one at a time) (Fig. 2) and rotate the tire and wheel. Radial runout should not exceed 0.76 mm (0.030 inch) with no tread "dips"

TIRES/WHEELS (Continued)

or "steps." Tread "dips" and "steps" can be identified by spikes of the dial indicator gauge.

(c) If runout exceeds limits, mark the original location of the tire on the wheel at the valve stem (Fig. 3). Also, mark the tire and wheel to indicate the original high spot of the assembly and record the runout measurement.

(d) If runout exceeds limits, the tire will need to be dismounted from the wheel to verify wheel vs. tire contribution. Refer to Wheel Runout below.

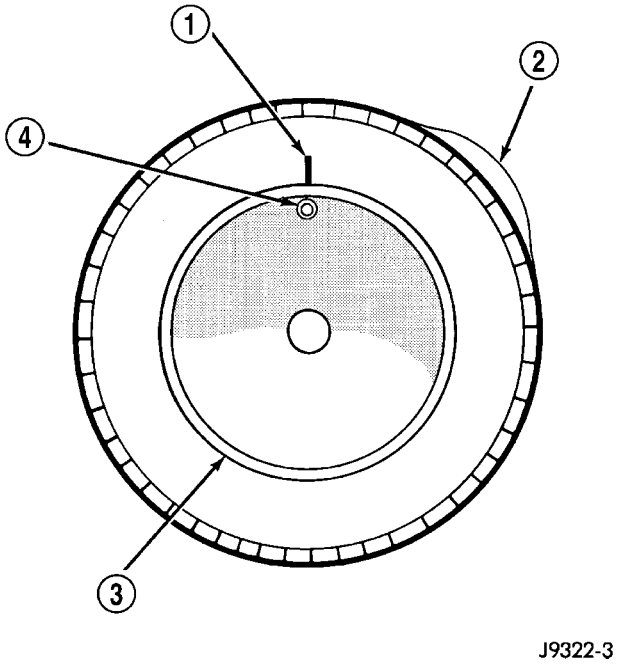

Fig. 3 Marking Tire

1 - REFERENCE MARK
2 - EXAMPLE HIGH SPOT ON TIRE
3 - WHEEL
4 - VALVE STEM

(3) **Lateral Runout.** Lateral runout for the vehicle system as well as the tire and wheel assembly should be less than 0.76 mm (0.030 inch). The same procedure and theory described for radial runout can also be applied to identify and reduce lateral runout.

(4) **Wheel Runout.** This runout check is performed as follows:

(a) Dismount the tire from the wheel.

(b) Mount the wheel back on the wheel balancer.

(c) Measure radial runout of the wheel at the tire bead seat (Fig. 4). Runout should not exceed 0.254 mm (0.010 inch) for aluminum wheels and 0.508 mm (.020 inch) for steel wheels. Replace the wheel if it exceeds the limit.

(d) Measure lateral runout of the wheel at the tire bead seat (Fig. 5). Runout should not exceed 0.762 mm (0.030 inch) for all wheels. Replace the wheel if it exceeds the limit.

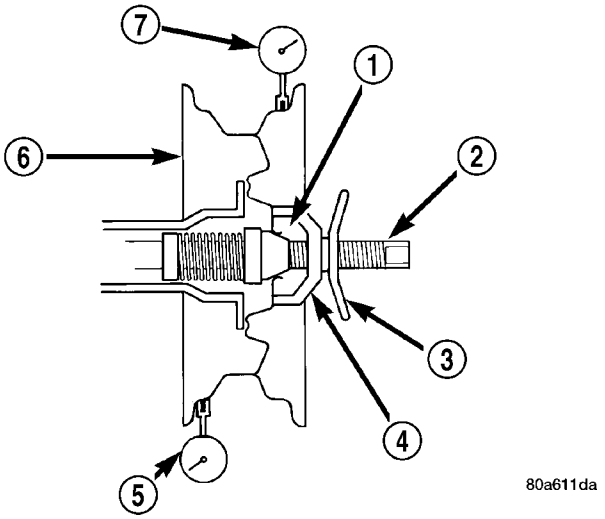

Fig. 4 Checking Radial Runout Of Wheel

1 - MOUNTING CONE
2 - SPINDLE SHAFT
3 - WING NUT
4 - PLASTIC CUP
5 - DIAL INDICATOR
6 - WHEEL
7 - DIAL INDICATOR

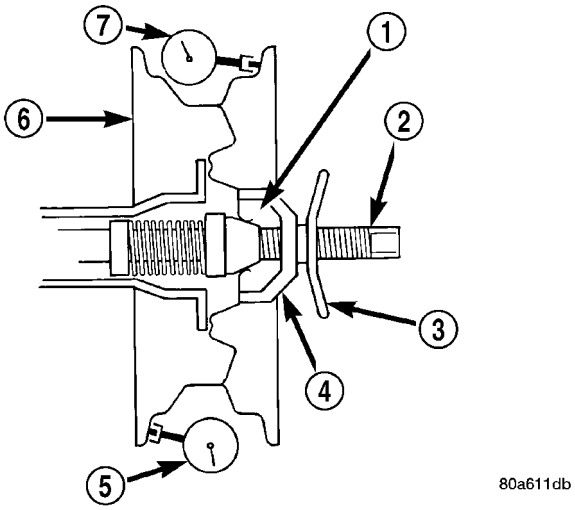

Fig. 5 Checking Lateral Runout Of Wheel

1 - MOUNTING CONE
2 - SPINDLE SHAFT
3 - WING NUT
4 - PLASTIC CUP
5 - DIAL INDICATOR
6 - WHEEL
7 - DIAL INDICATOR

(5) **Match Mounting.** If the wheel runout is within specifications, tire and wheel assembly runout can be improved by re-indexing (match mounting) the tire to the wheel as described below.

(a) Remount the tire on the rim 180 degrees from its original location (Fig. 6). Ensure the tire bead is properly seated.

TIRES/WHEELS (Continued)

(b) Re-measure the total runout. Mark the tire at the high spot and record the measurement.

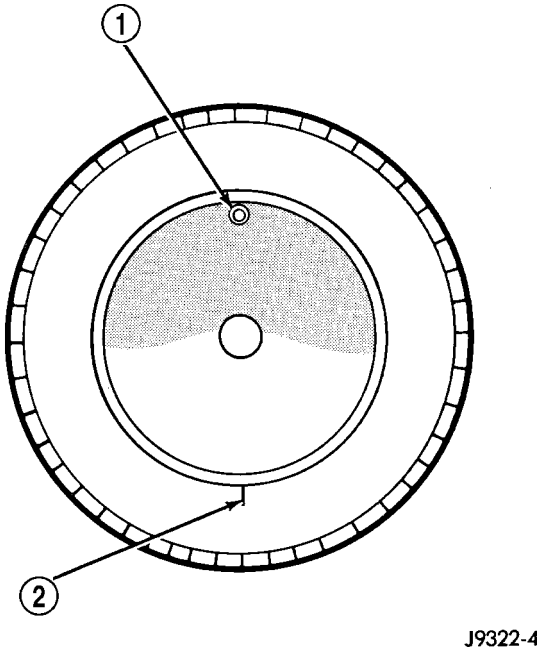

Fig. 6 Remount Tire 180 Degrees

1 - VALVE STEM
2 - REFERENCE MARK

If runout is still excessive, perform the following:

- If the new high spot is within 102 mm (4.0 inch) of the first high spot on the tire, replace the tire.
- If the new high spot is within 102 mm (4.0 inch) of the first high spot on the wheel, the wheel may be out of specification. Refer to Wheel Runout above.
- If the new high spot is NOT within 102 mm (4.0 inch) of either high spot, draw an arrow on the tread from new high spot toward the original (Fig. 7). Break down the tire and remount it 90 degrees on rim in that direction, then re-measure runout. This will normally reduce the runout to an acceptable amount.

(6) Once back together, road test the vehicle for at least 5 miles, following the format described in Road Test. If vibration persists, and all components tested are within specification, the tires may have an excessive radial force condition. Radial force variation can only be checked as indicated below. If this equipment is not available, consult with the tire manufacturer.

RADIAL FORCE VARIATION

Radial Force Variation can be checked using the Hunter GSP 9700 Vibration Control System (Wheel Balancer) or equivalent, if available. This type of equipment helps to correct ride disturbances by reducing the radial force variation of an assembly through re-indexing of the tire to wheel.

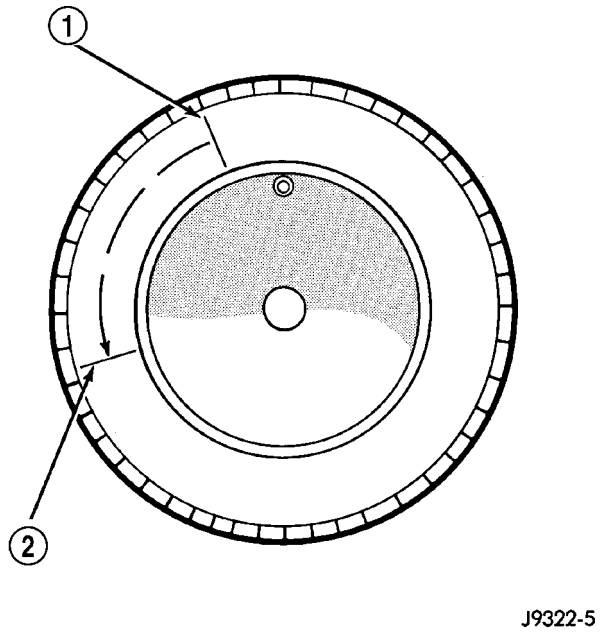

Fig. 7 Remount Tire 90 Degrees In Direction of Arrow

1 - 2ND HIGH SPOT ON TIRE
2 - 1ST HIGH SPOT ON TIRE

The equipment manufacturer or DaimlerChrysler Corporation may supply reference values as guidelines. Radial force measurements above the reference value may not always result in a ride disturbance, nor do they automatically mean the assembly components are out of specification. Do not replace components based on radial force values alone. Balancing, runout diagnosis, re-indexing, and subjective road testing must be performed as outlined in previous sections of this diagnosis and testing procedure.

Use the Radial Force equipment to identify suspect assemblies and minimize the radial forces. After all suspect assemblies are optimized, reinstall the assemblies and road test the vehicle. If a disturbance still exists and all other vibration diagnostic procedures have been completed, replace one tire or one wheel at a time, starting with the assembly having the highest force variation. Be sure to minimize each new assembly. Road test the vehicle following each replacement. Continue this process until the disturbance is resolved.

NOTE: When using Radial Force equipment, it is critically important to set proper tire inflation pressure and ensure centering of the wheel on the equipment spindle.

TIRES/WHEELS (Continued)

RADIAL FORCE VARIATION REFERENCE VALUES

DESCRIPTION	SPECIFICATION
Total Radial Force Variation (RFV)	Less Than 22 Lbs. ± 2 Lbs.
Radial First Harmonic (R1H)	Less Than 16 Lbs. ± 2 Lbs.
Radial Second Harmonic (R2H)	Less Than 12 Lbs. ± 2 Lbs.

STANDARD PROCEDURE

STANDARD PROCEDURE - TIRE AND WHEEL BALANCE

NOTE: Balance equipment must be calibrated and maintained per equipment manufacturer's specifications.

Wheel balancing can be accomplished with either on-vehicle or off-vehicle equipment.

NOTE: If using on-vehicle balancing equipment, on the driving axle, remove the opposite wheel and tire assembly.

It is recommended that a two-plane dynamic balancer be used when a wheel and tire assembly requires balancing. A static balancer should only be used when a two-plane balancer is not available.

Balance wheel and tire assemblies dynamically and statically to less than 0.25 (¼) ounce.

For static balancing, find location of heavy spot causing imbalance. Counter balance wheel directly opposite the heavy spot. Determine weight required to counterbalance the area of imbalance. Place half of this weight on the **inner** rim flange and the other half on the **outer** rim flange (Fig. 8).

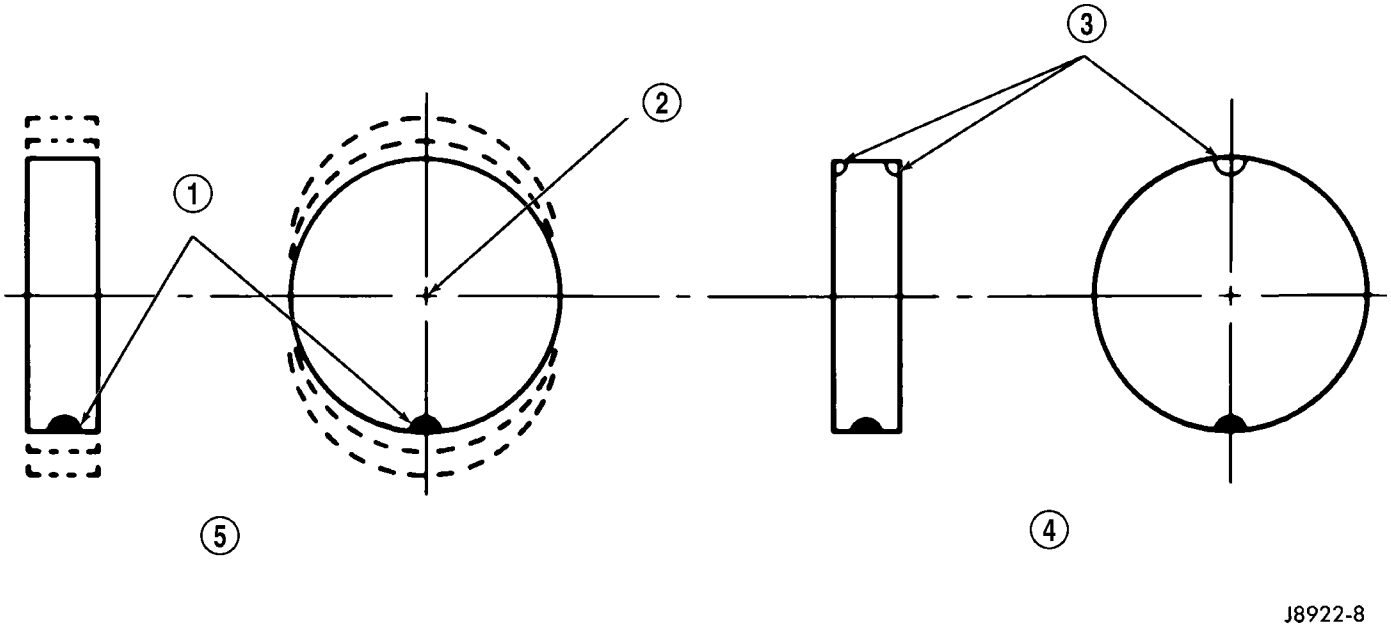

Fig. 8 Static Unbalance & Balance

1 - HEAVY SPOT
2 - CENTER LINE OF SPINDLE
3 - ADD BALANCE WEIGHTS HERE
4 - CORRECTIVE WEIGHT LOCATION
5 - TIRE OR WHEEL TRAMP, OR WHEEL HOP

TIRES/WHEELS (Continued)

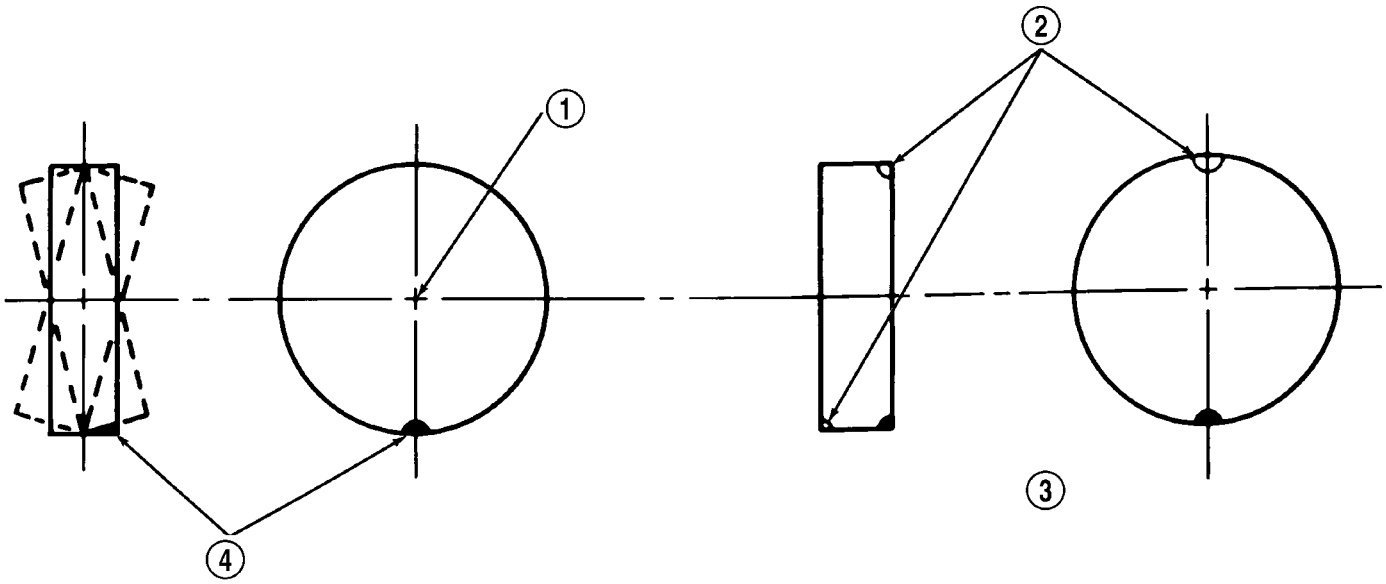

Fig. 9 Dynamic Unbalance & Balance

1 - CENTER LINE OF SPINDLE
2 - ADD BALANCE WEIGHTS HERE
3 - CORRECTIVE WEIGHT LOCATION
4 - HEAVY SPOT WHEEL SHIMMY AND VIBRATION

For dynamic balancing, the balance equipment is designed to indicate the location and amount of weight to be applied to both the inner and outer rim flanges (Fig. 9).

The aluminum wheels on this vehicle use a unique wheel weight (Fig. 10). This wheel weight is designed to fit the contoured surface of the wheel (Fig. 10). When balancing an aluminum wheel, this wheel weight must be used. Do not use any other type of wheel weight. It will not properly fit the contour of the wheel.

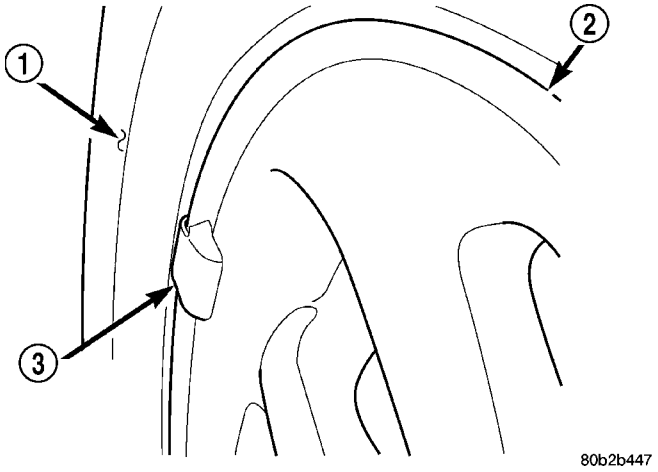

Fig. 10 Aluminum Wheel Weight

1 - TIRE
2 - WHEEL
3 - WHEEL WEIGHT

Always verify the Balance. When using off-vehicle equipment, rotate assembly 180 degrees on balance equipment to verify balance. Variation should not be more than 0.125 (⅛) ounce. If variation is more than 0.125 ounce, balancing equipment could be malfunctioning.

If difficult to balance, break down the wheel and tire assembly and check for loose debris inside tire. Prior to disassembly, mark (index) the tire at the valve stem. Use this mark in order to remount the tire in its original orientation with respect to the wheel.

STANDARD PROCEDURE - TIRE AND WHEEL MATCH MOUNTING

Wheels and tires are match mounted at the factory. This means that the high spot of the tire is matched to the low spot on the wheel rim. This technique is used to reduce runout in the wheel and tire assembly. The high spot on the tire is marked with a paint mark or a bright colored adhesive label on the outboard sidewall. The low spot on the wheel is identified with a label on the outside of the rim and a dot or line in the drop well area of the rim (inside where the tire mounts). If the outside label has been removed, the tire will have to be removed to locate the dot or line on the inside of the rim. The tire can then be match mounted to the tire.

Information on match mounting the tire to the wheel can be found in Tire and Wheel Runout/Match Mounting, items (2) through (5), within Diagnosis And Testing - Tire And Wheel Vibration. (Refer to 22 - TIRES/WHEELS - DIAGNOSIS AND TESTING)

TIRES/WHEELS (Continued)

STANDARD PROCEDURE - TIRE AND WHEEL ROTATION

NON-DIRECTIONAL TREAD PATTERN TIRES

Tires on the front and rear axles operate at different loads and perform different functions. For these reasons, they wear at unequal rates, and tend to develop irregular wear patterns. These effects can be reduced by timely rotation of tires. The benefits of rotation are especially worthwhile. Rotation will increase tread life, help to maintain mud, snow, and wet traction levels, and contribute to a smooth, quiet ride.

The suggested rotation method is the forward-cross tire rotation method (Fig. 11). This method takes advantage of current tire industry practice which allows rotation of radial-ply tires. Other rotation methods may be used, but may not have all the benefits of the recommended method.

NOTE: Only the 4 tire rotation method may be used if the vehicle is equipped with a low mileage or temporary spare tire.

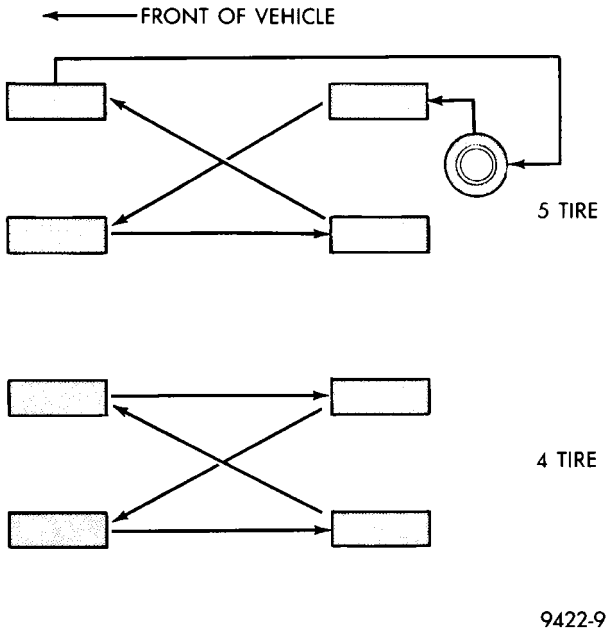

Fig. 11 Forward-Cross Tire Rotation Method

DIRECTIONAL TREAD PATTERN TIRES

Some vehicles are fitted with special high-performance tires having a directional tread pattern. These tires are designed to improve traction on wet pavement. To obtain the full benefits of this design, the tires must be installed so that they rotate in the correct direction. This is indicated by arrows on the tire sidewalls.

When wheels and tires are being installed, extra care is needed to ensure that this direction of rotation is maintained.

Refer to Owner's Manual for rotation schedule.

REMOVAL - TIRE AND WHEEL ASSEMBLY

(1) Raise the vehicle so the tires clear ground level. (Refer to LUBRICATION & MAINTENANCE/ HOISTING - STANDARD PROCEDURE)

(2) If the vehicle is equipped with wheel covers, remove the cover from the wheel by prying it off with an appropriate wheel cover removal tool.

(3) Remove the wheel mounting (lug) nuts from the studs.

(4) Remove the tire and wheel assembly from the hub.

INSTALLATION - TIRE AND WHEEL ASSEMBLY

(1) To install the tire and wheel assembly, first position it properly on the studs and hub mounting surface using the hub pilot as a guide.

CAUTION: Never apply oil or grease to the wheel mounting studs or nuts.

(2) Install and progressively tighten the five wheel mounting (lug) nuts in the proper sequence (Fig. 12) until half the specified torque is reached. Repeat the sequence, tightening the wheel mounting (lug) nuts to a final torque of 135 N·m (100 ft. lbs.).

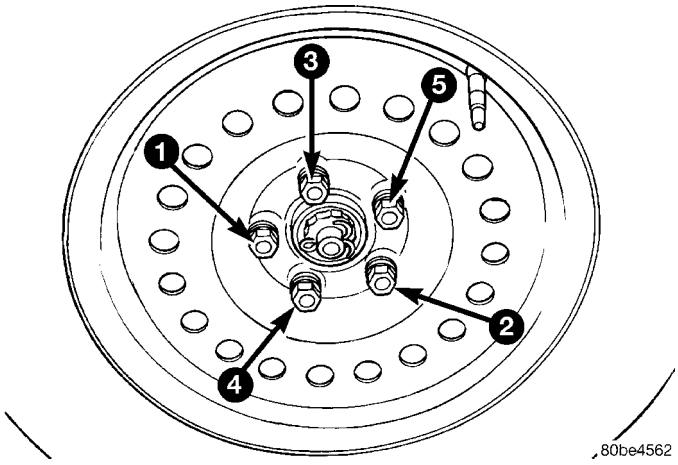

Fig. 12 Wheel Nut Tightening Sequence

(3) If equipped with wheel covers, align the valve stem notch in the wheel cover with the valve stem on the wheel. By hand, tap the wheel cover onto the wheel until it is fully seated against the wheel.

(4) Lower the vehicle.

TIRES

DESCRIPTION

DESCRIPTION - TIRE

Tires are designed and engineered for each specific vehicle. They provide the best overall performance for normal operation. The ride and handling characteristics match the vehicle's requirements. With proper care they will give excellent reliability, traction, skid resistance, and tread life.

Driving habits have more effect on tire life than any other factor. Careful drivers will obtain, in most cases, much greater mileage than severe use or careless drivers. A few of the driving habits which will shorten the life of any tire are:

- Rapid acceleration
- Severe application of brakes
- High-speed driving
- Taking turns at excessive speeds
- Striking curbs and other obstacles
- Operating vehicle with over or under inflated tire pressures

Radial ply tires are more prone to irregular tread wear. It is important to follow the tire rotation interval shown in the section on Tire Rotation. This will help to achieve a greater tread-life potential.

TIRE IDENTIFICATION

Tire type, size, load index and speed rating are encoded in the letters and numbers imprinted on the side wall of the tire. Refer to the Tire Identification chart to decipher the code. For example purposes, the tire size P225/60 R 16 97 T is used in the chart. An All Season type tire will also have either M + S, M & S or M - S (indicating mud and snow traction) imprinted on the side wall. An Extra or Light Load marking “XL” or “LL” may also be listed on the sidewall. The absence of an “XL” or “LL” marking infers a standard load tire.

TIRE IDENTIFICATION

P	TIRE TYPE (Not present on all tires)	P - Passenger T - Temporary C - Commercial LT - Light Truck
225	SECTIONAL WIDTH	SHOWN IN MILLIMETERS
60	ASPECT RATIO	SECTIONAL HEIGHT ÷ SECTIONAL WIDTH (Refer to Aspect Ratio Figure 13)
R	CONSTRUCTION TYPE	R - RADIAL B - BIAS BELTED D - DIAGONAL (BIAS)
16	WHEEL DIAMETER	SHOWN IN INCHES
97	LOAD INDEX	*
T	SPEED RATING	*

*** NOTE: Consult the tire manufacturer regarding any questions on tire specifications or capabilities.**

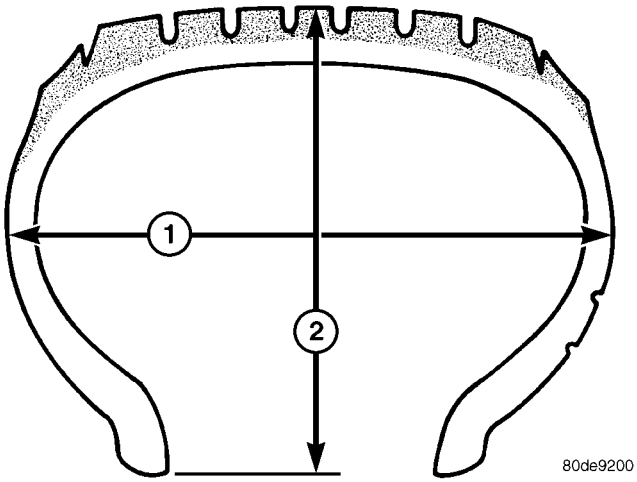

Fig. 13 Tire Aspect Ratio

1 - SECTIONAL WIDTH
2 - SECTIONAL HEIGHT

TIRES (Continued)

TIRE CHAINS

Refer to the owners manual supplied with the vehicle to determine whether the use of tire chains is permitted on this vehicle.

DESCRIPTION - RADIAL-PLY TIRES

Radial-ply tires improve handling, tread life and ride quality, and decrease rolling resistance.

Radial-ply tires must always be used in sets of four. Under no circumstances should they be used on the front only. They may be mixed with temporary spare tires when necessary. A maximum speed of 80 km/h (50 mph) is recommended while a temporary spare is in use.

Radial-ply tires have the same load-carrying capacity as other types of tires of the same size. They also use the same recommended inflation pressures.

The use of oversized tires, either in the front or rear of the vehicle, can cause vehicle drive train failure. This could also cause inaccurate wheel speed signals when the vehicle is equipped with Antilock Brakes.

The use of tires from different manufactures on the same vehicle is NOT recommended. The proper tire pressure should be maintained on all four tires.

DESCRIPTION - REPLACEMENT TIRES

WARNING: FAILURE TO EQUIP THE VEHICLE WITH TIRES HAVING ADEQUATE SPEED CAPABILITY CAN RESULT IN SUDDEN TIRE FAILURE.

WARNING:: IN ORDER TO MAINTAIN THE SPEED CAPABILITY OF THE VEHICLE, REPLACEMENT TIRES MUST HAVE SPEED RATINGS EQUAL TO OR HIGHER THAN THOSE FITTED TO THE VEHICLE AS ORIGINAL EQUIPMENT. IF TIRES WITH LOWER SPEED RATINGS ARE FITTED, THE VEHICLE'S HANDLING MAY BE AFFECTED AND THE SPEED CAPABILITY OF THE VEHICLE MAY BE LOWERED TO THE MAXIMUM SPEED CAPABILITY OF THE REPLACEMENT TIRES. TO AVOID AN ACCIDENT RESULTING IN SEVERE OR FATAL INJURY, CONSULT THE TIRE MANUFACTURER IN REGARDS TO MAXIMUM SPEED RATINGS.

It is recommended that tires equivalent to the original equipment tires be used when replacement is needed.

Failure to use equivalent replacement tires may adversely affect the safety and handling of the vehicle.

The original equipment tires provide a proper combination of many characteristics such as:

- Ride
- Noise
- Handling
- Durability
- Tread life
- Traction
- Rolling resistance
- Speed capability

The use of tires smaller than the minimum tire size approved for the vehicle can result in tire overloading and failure.

Use tires that have the approved load rating for the vehicle and never overload them. Failure to equip the vehicle with tires having adequate speed capability can result in sudden tire failure and loss of vehicle control.

The use of oversize tires may cause interference with vehicle components. Under extremes of suspension and steering travel, interference with vehicle components may cause tire damage.

DESCRIPTION - SPARE TIRE (TEMPORARY)

The compact temporary spare tire is designed for emergency use only. The original tire should be repaired or replaced at the first opportunity, then reinstalled. Do not exceed speeds of 80 km/h (50 mph) when using the temporary spare tire. Refer to Owner's Manual for complete details.

DIAGNOSIS AND TESTING

DIAGNOSIS AND TESTING - TIRE NOISE

Unusual tire noise can be associated with tire and wheel vibration or irregular tire wear. For vibration, (Refer to 22 - TIRES/WHEELS - DIAGNOSIS AND TESTING). For irregular tire wear, (Refer to 22 - TIRES/WHEELS/TIRES - DIAGNOSIS AND TESTING).

DIAGNOSIS AND TESTING - TIRE/VEHICLE LEAD

(Refer to 2 - SUSPENSION/WHEEL ALIGNMENT - DIAGNOSIS AND TESTING)

DIAGNOSIS AND TESTING - TIRE WEAR PATTERNS

Under inflation will cause wear on the shoulders of tire. Over inflation will cause wear at the center of tire.

Excessive camber causes the tire to run at an angle to the road. One side of tread is then worn more than the other (Fig. 14).

Excessive toe-in or toe-out causes wear on the tread edges and a feathered effect across the tread (Fig. 14).

TIRES (Continued)

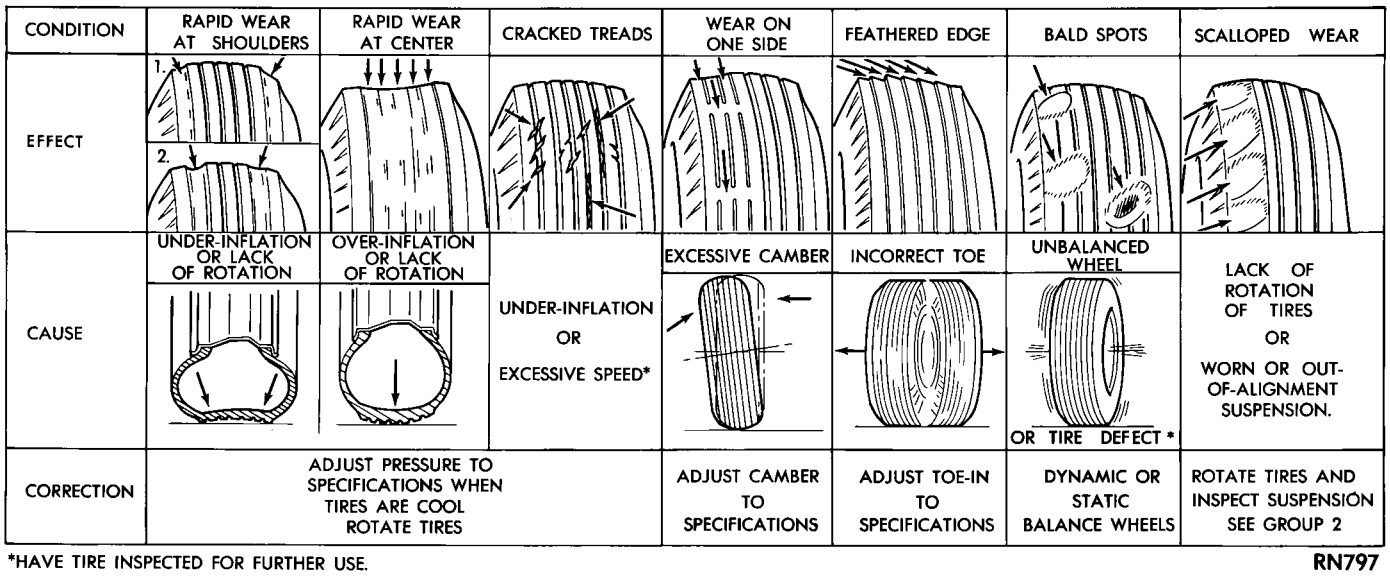

Fig. 14 Tire Wear Patterns

DIAGNOSIS AND TESTING - TREAD WEAR INDICATORS

Tread wear indicators are molded into the bottom of the tread grooves. When tread depth is 1.6 mm (1/16 in.), the tread wear indicators will appear as a 13 mm (1/2 in.) band (Fig. 15).

Tire replacement is necessary when indicators appear in two or more grooves or if localized balding occurs.

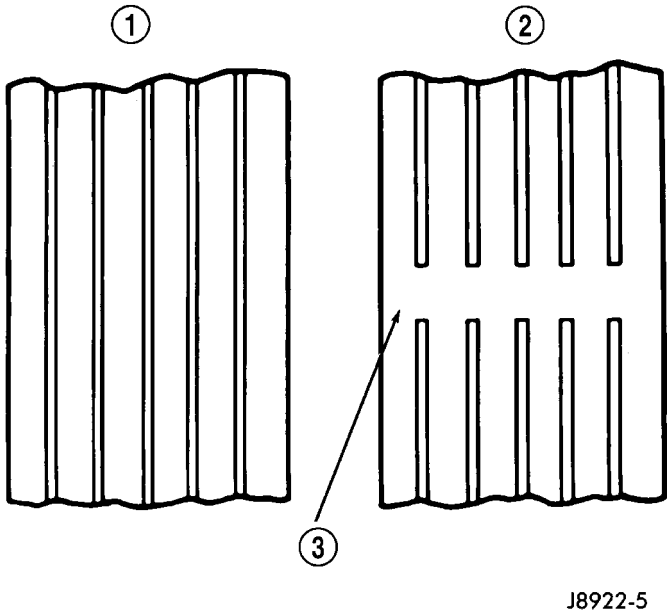

Fig. 15 Tread Wear Indicators

1 - TREAD ACCEPTABLE
2 - TREAD UNACCEPTABLE
3 - WEAR INDICATOR

STANDARD PROCEDURE

STANDARD PROCEDURE - TIRE INFLATION PRESSURES

The specified tire pressures have been chosen to provide safe operation, vehicle stability, and a smooth ride. The proper tire pressure specification can be found on the Tire Inflation Pressure Label provided with the vehicle (usually on the rear face of the driver's door).

A quality air pressure gauge is recommended to check tire air pressure. Tire pressure should be checked cold once per month. Check tire pressure more frequently when the weather temperature varies widely. Tire pressure will decrease when the outdoor temperature drops. After checking the air pressure, replace valve cap finger tight.

Inflation pressures specified on the Tire Inflation Pressure Label are always the cold inflation pressure of the tire. Cold inflation pressure is obtained after the vehicle has not been operated for at least 3 hours, or the vehicle is driven less than one mile after being inoperative for 3 hours. Tire inflation pressures may increase from 2 to 6 pounds per square inch (psi) during operation. Do not reduce this normal pressure buildup.

Improper inflation can cause:

- Uneven wear patterns
- Reduced tread life
- Reduced fuel economy
- Unsatisfactory ride
- The vehicle to drift.

TIRES (Continued)

WARNING: OVER OR UNDER INFLATED TIRES CAN AFFECT VEHICLE HANDLING. THE TIRE CAN FAIL SUDDENLY, RESULTING IN LOSS OF VEHICLE CONTROL.

Under inflation causes rapid shoulder wear, tire flexing, and can result in tire failure (Fig. 16).

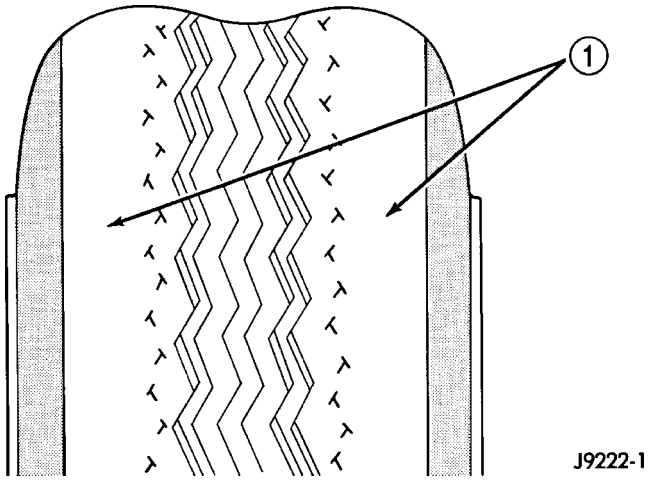

Fig. 16 Under Inflation Wear

1 - THIN TIRE TREAD AREAS

Over inflation causes rapid center wear and loss of the tire's ability to cushion shocks (Fig. 17).

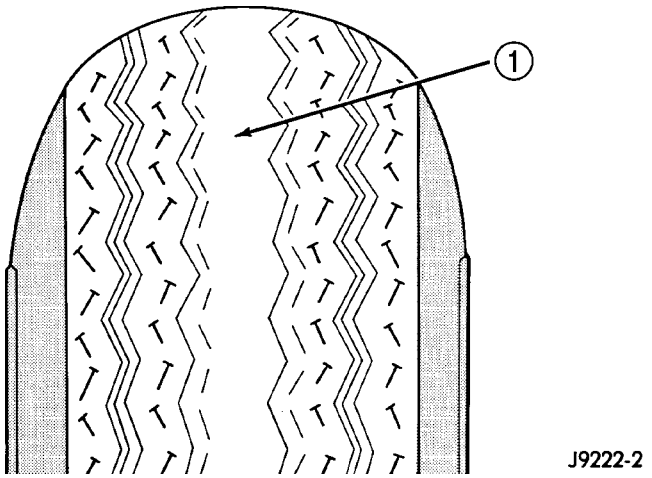

Fig. 17 Over Inflation Wear

1 - THIN TIRE TREAD AREA

STANDARD PROCEDURE - TIRE PRESSURE FOR HIGH SPEED OPERATION

DaimlerChrysler Corporation advocates driving at safe speeds within posted speed limits. Speed capacity of a tire is a function of the tire speed rating, inflation pressure and vehicle axle weight. Where speed limits allow the vehicle to be driven at high speeds, correct tire inflation pressure is very important. Vehicles loaded to maximum capacity should not be driven at continuous speeds over 120 km/h (75 mph). Never exceed the maximum speed capacity of the tire. For information on tire identification and speed ratings, (Refer to 22 - TIRES/WHEELS/TIRES - DESCRIPTION).

STANDARD PROCEDURE - TIRE LEAK REPAIRING

For proper repairing, a radial tire must be removed from the wheel. Repairs should only be made if the defect, or puncture, is in the tread area (Fig. 18). The tire should be replaced if the puncture is located in the sidewall.

Deflate tire completely before attempting to dismount the tire from the wheel. **Use a lubricant such as a mild soap solution when dismounting or mounting tire.** Use tools free of burrs or sharp edges which could damage the tire or wheel rim.

Before mounting tire on wheel, make sure all rust is removed from the rim bead and repaint if necessary.

Install wheel on vehicle, and progressively tighten the 5 wheel nuts to a torque of 135 N·m (100 ft. lbs.).

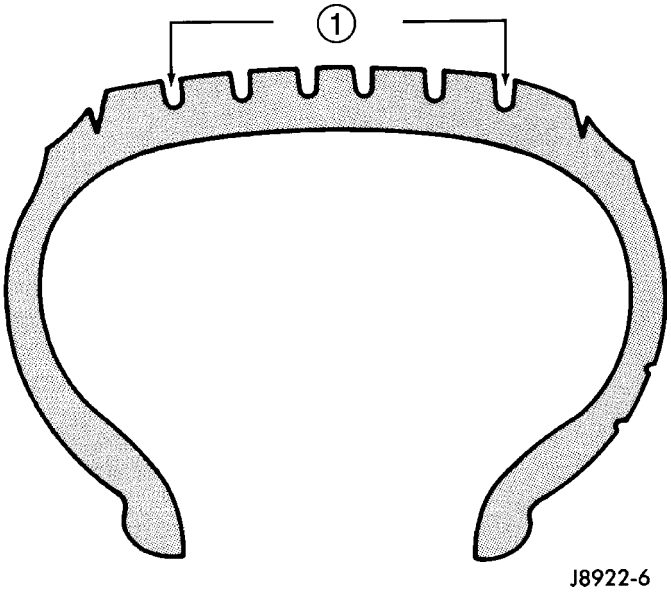

Fig. 18 Tire Repair Area

1 - REPAIRABLE AREA

CLEANING - TIRES

Before delivery of a vehicle, remove the protective coating on the tires with white sidewalls or raised white letters. To remove the protective coating, apply warm water and let it soak for a few minutes. Afterwards, scrub the coating away with a soft bristle brush. Steam cleaning may also be used to remove the coating.

CAUTION: DO NOT use gasoline, mineral oil, oil-based solvent or a wire brush for cleaning.

WHEELS

DESCRIPTION

Original equipment wheels are designed for proper operation at all loads up to the specified maximum vehicle capacity.

All models use steel or cast aluminum drop center wheels. Every wheel has raised sections between the rim flanges and rim drop well called safety humps (Fig. 19).

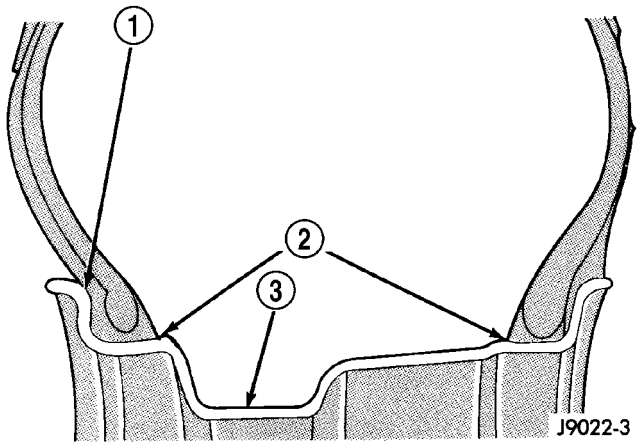

Fig. 19 Safety Rim

1 - FLANGE
2 - RIDGE
3 - WELL

Initial inflation of the tires forces the bead over these raised sections. In case of air loss the raised sections help hold the tire in position on the wheel until the vehicle can be brought to a safe stop.

Cast aluminum wheels require special balance weights to fit on the rim flange of the wheel and special wheel clamps for the alignment equipment.

The wheel studs and nuts are designed for specific wheel applications and must be replaced with equivalent parts. Do not use replacement parts of lesser quality or of a substitute design. All aluminum and some steel wheels have wheel stud nuts with an enlarged nose. This enlarged nose is necessary to ensure proper retention of the wheels.

Before installing a wheel, remove any buildup of corrosion on the wheel mounting surface.

WARNING: INSTALLING WHEELS WITHOUT GOOD METAL-TO-METAL CONTACT COULD CAUSE LOOSENING OF WHEEL LUG NUTS. THIS COULD ADVERSELY AFFECT THE SAFETY AND HANDLING OF YOUR VEHICLE.

DIAGNOSIS AND TESTING - WHEEL INSPECTION

Inspect wheels for:

- Excessive runout
- Dents, cracks or irregular bends
- Damaged wheel stud (lug) holes
- Air Leaks

NOTE: Do not attempt to repair a wheel by hammering, heating or welding.

If a wheel is damaged, an original equipment replacement wheel should be used. When obtaining replacement wheels, they must be equivalent in load carrying capacity. The diameter, width, offset, pilot hole and bolt circle of the wheel should be the same as the original wheel.

WARNING: FAILURE TO USE EQUIVALENT REPLACEMENT WHEELS MAY ADVERSELY AFFECT THE SAFETY AND HANDLING OF THE VEHICLE.

WARNING: REPLACEMENT WITH USED WHEELS IS NOT RECOMMENDED. THE SERVICE HISTORY OF THE WHEEL MAY HAVE INCLUDED SEVERE TREATMENT OR VERY HIGH MILEAGE. THE RIM COULD FAIL WITHOUT WARNING.

CLEANING - ALUMINUM WHEEL CARE

Chrome plated and painted aluminum wheels should be cleaned regularly using mild soap and water to maintain their luster and to prevent corrosion.

Care must be taken in the selection of tire and wheel cleaning chemicals and equipment to prevent damage to the wheels. Any of the “DO NOT USE” items listed below WILL damage chrome plated and painted aluminum wheels.

DO NOT USE:

- any abrasive metal cleaner
- any abrasive cleaning pad or brush
- any cleaner that contains an acid (this will immediately react with and discolor the chromium surface)
- chrome polish (unless it is buffed off immediately after application)
- oven cleaner
- a car wash that uses carbide-tipped wheel cleaning brushes

WHEELS (Continued)

SPECIFICATIONS

WHEEL

SPECIFICATIONS

DESCRIPTION	SPECIFICATION
Wheel Mounting (Lug) Nut Hex Size	19 mm
Wheel Mounting Stud Size	M12 x 1.5 mm

TORQUE SPECIFICATIONS

DESCRIPTION	N·m	Ft. Lbs.	In. Lbs.
Wheel Mounting (Lug) Nut	135	100	—

WHEEL MOUNTING STUDS - FRONT

REMOVAL

CAUTION: If a wheel mounting stud needs to be replaced in the hub and bearing assembly, DO NOT hammer the studs out of the hub flange. If a stud is removed by hammering it out of the bearing flange, damage to the hub and bearing assembly will occur leading to premature bearing failure.

(1) Raise vehicle on jackstands or centered on a frame contact type hoist. (Refer to LUBRICATION & MAINTENANCE/HOISTING - SERVICE PROCEDURE).

(2) Remove the front wheel and tire assembly from the vehicle.

(3) Remove front disc brake caliper and adapter as an assembly. Refer to Brakes.

(4) Remove any retainer clips, then remove brake rotor form hub.

(5) Install a lug nut on wheel stud to be removed from hub and bearing assembly, (Fig. 20) so threads on stud are even with end of lug nut. Rotate hub so stud requiring removal is aligned with notch cast into front of steering knuckle. Install Remover, Special Tool C-4150 on hub and bearing assembly flange and wheel stud (Fig. 20).

(6) Tighten down on special tool, this will push the wheel stud out of the hub and bearing flange.

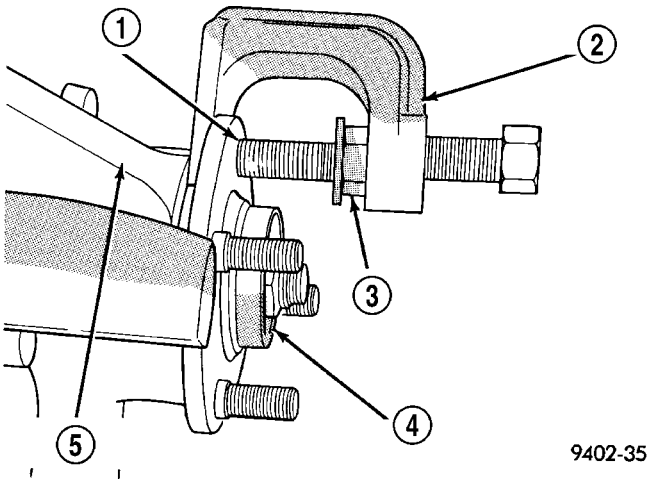

Fig. 20 Removing Wheel Stud From Hub And Bearing

1 - WHEEL STUD
2 - SPECIAL TOOL C-4150A
3 - LUG NUT
4 - FRONT HUB
5 - STEERING KNUCKLE

INSTALLATION

CAUTION: If a wheel mounting stud needs to be replaced in the hub and bearing assembly, DO NOT hammer the studs out of the hub flange. If a stud is removed by hammering it out of the bearing flange, damage to the hub and bearing assembly will occur leading to premature bearing failure.

(1) Install replacement wheel stud into flange of hub and bearing assembly. Install washers on wheel stud, then install a wheel lug nut on stud with flat side of lug nut against washers (Fig. 21).

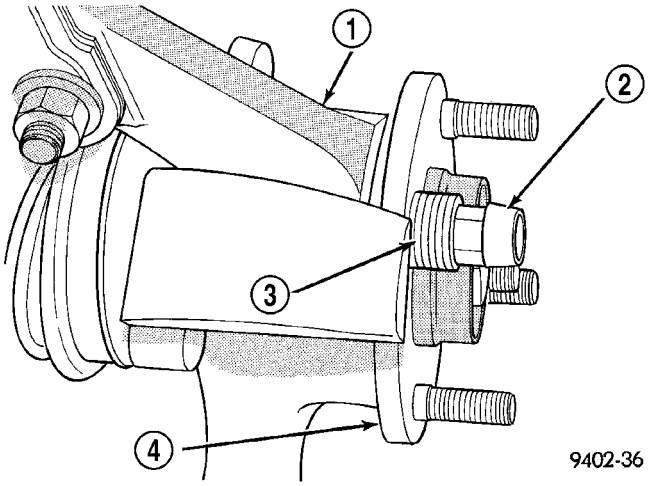

Fig. 21 Installing Wheel Stud Into Hub (Typical)

1 - STEERING KNUCKLE
2 - WHEEL LUG NUT
3 - WASHERS
4 - FRONT HUB

WHEEL MOUNTING STUDS - FRONT (Continued)

(2) Tighten the wheel lug nut, pulling the wheel stud into the flange of the hub and bearing assembly. When the head of the stud is fully seated against the bearing flange, remove lug nut and washers from wheel stud.

(3) Install brake rotor on front hub.

(4) Install disc brake caliper and adapter as an assembly on knuckle. Refer to Brakes.

(5) Install front wheel and tire assembly. Install front wheel lug nuts and torque to 135 N·m (100 ft. lbs.).

(6) Lower vehicle.

WHEEL MOUNTING STUDS - REAR

REMOVAL

CAUTION: DO NOT hammer studs out of the hub flange. If a stud is removed by hammering it out of the bearing flange, damage to the hub and bearing assembly will occur leading to premature bearing failure.

(1) Remove the hub and bearing from the vehicle. (Refer to 2 - SUSPENSION/REAR/HUB / BEARING - REMOVAL)

CAUTION: Take care to keep hub and bearing assembly from falling during stud removal. Damage to the hub and bearing could result.

(2) Position the hub and bearing assembly under a hydraulic press ram, supported by a 21 mm deep-well impact socket under the stud to be replaced (Fig. 22).

(3) Press the stud out of the hub flange and into the socket well.

(4) Remove the hub and bearing assembly from the press.

(5) Remove the stud from the socket.

INSTALLATION

CAUTION: DO NOT hammer studs into the hub flange. If a stud is installed in such a manner, damage to the hub and bearing assembly may occur leading to premature bearing failure.

(1) Install wheel stud into stud hole in hub and bearing assembly.

(2) Position the hub and bearing assembly face down with stud pointing down into the well of the 21 mm socket. The hydraulic press ram must line up with the stud (Fig. 23).

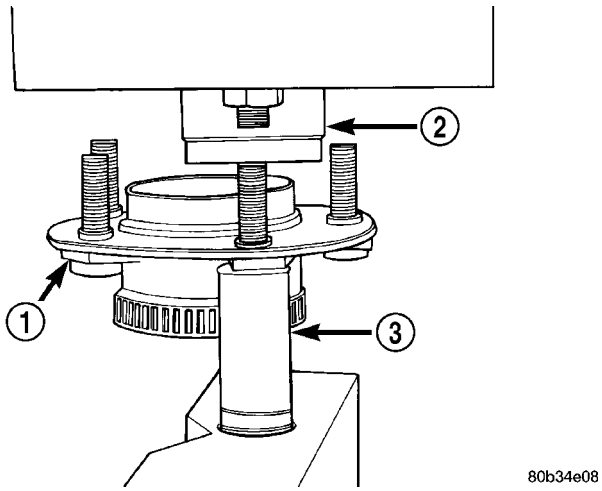

Fig. 22 Wheel Stud Removal

1 - HUB AND BEARING ASSEMBLY
2 - PRESS RAM
3 - 21mm IMPACT SOCKET

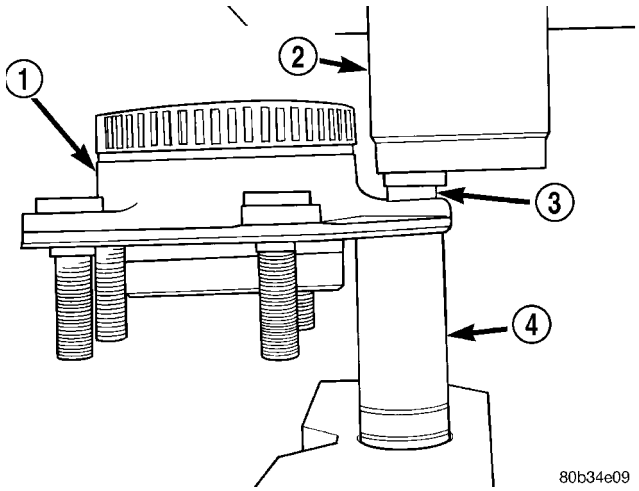

Fig. 23 Wheel Stud Installation

1 - HUB AND BEARING ASSEMBLY
2 - PRESS RAM
3 - WHEEL STUD
4 - 21mm IMPACT SOCKET

(3) Press the stud into the hub flange until it bottoms.

(4) Remove the hub and bearing assembly from the press.

(5) Install the hub and bearing on the vehicle. (Refer to 2 - SUSPENSION/REAR/HUB / BEARING - INSTALLATION)

BODY

TABLE OF CONTENTS

page

BODY
DESCRIPTION – VEHICLE IDENTIFICATION . . . 1
WARNING
SAFETY PRECAUTIONS AND WARNINGS . . . 1
DIAGNOSIS AND TESTING
DIAGNOSIS AND TESTING - WATER LEAKS . 1
DIAGNOSIS AND TESTING - WIND NOISE . . . 2
STANDARD PROCEDURE
STANDARD PROCEDURE - PLASTIC BODY PANEL REPAIR 3
STANDARD PROCEDURE - HEAT STAKING . 10
SPECIFICATIONS
BODY LUBRICATION 10
SPECIFICATIONS - TORQUE 11
SPECIAL TOOLS
BODY 12

page

CONVERTIBLE TOP 13
DECKLID/HATCH/LIFTGATE/TAILGATE 23
DOOR - FRONT 27
DOORS - REAR 45
EXTERIOR 52
HOOD 62
INSTRUMENT PANEL 66
INTERIOR 78
PAINT 93
ADJUSTABLE QUARTER GLASS JR-27 95
SEATS 99
STATIONARY GLASS 118
SUNROOF 124
WEATHERSTRIP/SEALS 134
BODY STRUCTURE 145

BODY

DESCRIPTION – VEHICLE IDENTIFICATION

Throughout this group, references to the DaimlerChrysler Corporation vehicle family identification code are used when describing a procedure that is unique to that vehicle. (Refer to VEHICLE DATA/VEHICLE INFORMATION/VEHICLE IDENTIFICATION NUMBER - DESCRIPTION). If a procedure is common to all vehicles covered in this manual, no reference will be made to a vehicle family code.

WARNING

SAFETY PRECAUTIONS AND WARNINGS

WARNING: USE A OSHA APPROVED BREATHING FILTER WHEN SPRAYING PAINT OR SOLVENTS IN A CONFINED AREA. PERSONAL INJURY CAN RESULT.
AVOID PROLONGED SKIN CONTACT WITH PETROLEUM OR ALCOHOL – BASED CLEANING SOLVENTS. PERSONAL INJURY CAN RESULT.
DO NOT STAND UNDER A HOISTED VEHICLE THAT IS NOT PROPERLY SUPPORTED ON SAFETY STANDS. PERSONAL INJURY CAN RESULT.

CAUTION: When holes must be drilled or punched in an inner body panel, verify depth of space to the outer body panel, electrical wiring, or other components. Damage to vehicle can result.
Do not weld exterior panels unless combustible material on the interior of vehicle is removed from the repair area. Fire or hazardous conditions, can result.
Always have a fire extinguisher ready for use when welding.
Disconnect the negative (-) cable clamp from the battery when servicing electrical components that are live when the ignition is OFF. Damage to electrical system can result.
Do not use abrasive chemicals or compounds on painted surfaces. Damage to finish can result.
Do not use harsh alkaline based cleaning solvents on painted or upholstered surfaces. Damage to finish or color can result.
Do not hammer or pound on plastic trim panel when servicing interior trim. Plastic panels can break.

DIAGNOSIS AND TESTING

DIAGNOSIS AND TESTING - WATER LEAKS

Water leaks can be caused by poor sealing, improper body component alignment, body seam porosity, missing plugs, or blocked drain holes. Centrifugal and gravitational force can cause water to drip from a location away from the actual leak point, making leak detection difficult. All body sealing points should be water tight in normal wet-driving

conditions. Water flowing downward from the front of the vehicle should not enter the passenger or luggage compartment. Moving sealing surfaces will not always seal water tight under all conditions. At times, side glass or door seals will allow water to enter the passenger compartment during high pressure washing or hard driving rain (severe) conditions. Overcompensating on door or glass adjustments to stop a water leak that occurs under severe conditions can cause premature seal wear and excessive closing or latching effort. After completing a repair, water test vehicle to verify leak has stopped before returning vehicle to use.

VISUAL INSPECTION BEFORE WATER LEAK TESTS

Verify that floor and body plugs are in place, body drains are clear, and body components are properly aligned and sealed. If component alignment or sealing is necessary, refer to the appropriate section of this group for proper procedures.

WATER LEAK TESTS

WARNING: DO NOT USE ELECTRIC SHOP LIGHTS OR TOOLS IN WATER TEST AREA. PERSONAL INJURY CAN RESULT.

When the conditions causing a water leak have been determined, simulate the conditions as closely as possible.

- If a leak occurs with the vehicle parked in a steady light rain, flood the leak area with an open-ended garden hose.
- If a leak occurs while driving at highway speeds in a steady rain, test the leak area with a reasonable velocity stream or fan spray of water. Direct the spray in a direction comparable to actual conditions.
- If a leak occurs when the vehicle is parked on an incline, hoist the end or side of the vehicle to simulate this condition. This method can be used when the leak occurs when the vehicle accelerates, stops or turns. If the leak occurs on acceleration, hoist the front of the vehicle. If the leak occurs when braking, hoist the back of the vehicle. If the leak occurs on left turns, hoist the left side of the vehicle. If the leak occurs on right turns, hoist the right side of the vehicle. For hoisting recommendations (Refer to LUBRICATION & MAINTENANCE/HOISTING - STANDARD PROCEDURE).

WATER LEAK DETECTION

To detect a water leak point-of-entry, do a water test and watch for water tracks or droplets forming on the inside of the vehicle. If necessary, remove interior trim covers or panels to gain visual access to the leak area. If the hose cannot be positioned without being held, have someone help do the water test.

Some water leaks must be tested for a considerable length of time to become apparent. When a leak appears, find the highest point of the water track or drop. The highest point usually will show the point of entry. After leak point has been found, repair the leak and water test to verify that the leak has stopped.

Locating the entry point of water that is leaking into a cavity between panels can be difficult. The trapped water may splash or run from the cavity, often at a distance from the entry point. Most water leaks of this type become apparent after accelerating, stopping, turning, or when on an incline.

MIRROR INSPECTION METHOD

When a leak point area is visually obstructed, use a suitable mirror to gain visual access. A mirror can also be used to deflect light to a limited-access area to assist in locating a leak point.

BRIGHT LIGHT LEAK TEST METHOD

Some water leaks in the luggage compartment can be detected without water testing. Position the vehicle in a brightly lit area. From inside the darkened luggage compartment inspect around seals and body seams. If necessary, have a helper direct a drop light over the suspected leak areas around the luggage compartment. If light is visible through a normally sealed location, water could enter through the opening.

PRESSURIZED LEAK TEST METHOD

When a water leak into the passenger compartment cannot be detected by water testing, pressurize the passenger compartment and soap test exterior of the vehicle. To pressurize the passenger compartment, close all doors and windows, start engine, and set heater control to high blower in HEAT position. If engine can not be started, connect a charger to the battery to ensure adequate voltage to the blower. With interior pressurized, apply dish detergent solution to suspected leak area on the exterior of the vehicle. Apply detergent solution with spray device or soft bristle brush. If soap bubbles occur at a body seam, joint, seal or gasket, the leak entry point could be at that location.

DIAGNOSIS AND TESTING - WIND NOISE

Wind noise is the result of most air leaks. Air leaks can be caused by poor sealing, improper body component alignment, body seam porosity, or missing plugs in the engine compartment or door hinge pillar areas. All body sealing points should be airtight in normal driving conditions. Moving sealing surfaces will not always seal airtight under all conditions. At times, side glass or door seals will allow wind noise to be

BODY (Continued)

noticed in the passenger compartment during high cross winds. Over compensating on door or glass adjustments to stop wind noise that occurs under severe conditions can cause premature seal wear and excessive closing or latching effort. After a repair procedure has been performed, test vehicle to verify noise has stopped before returning vehicle to use.

VISUAL INSPECTION BEFORE TESTS

Verify that floor and body plugs are in place and body components are aligned and sealed. If component alignment or sealing is necessary, refer to the appropriate section of this group for proper procedures.

ROAD TESTING WIND NOISE

(1) Drive the vehicle to verify the general location of the wind noise.

(2) Apply 50 mm (2 in.) masking tape in 150 mm (6 in.) lengths along weatherstrips, weld seams or moldings. After each length is applied, drive the vehicle. If noise goes away after a piece of tape is applied, remove tape, locate, and repair defect.

POSSIBLE CAUSE OF WIND NOISE

- Moldings standing away from body surface can catch wind and whistle.
- Gaps in sealed areas behind overhanging body flanges can cause wind-rushing sounds.
- Misaligned movable components.
- Missing or improperly installed plugs in pillars.
- Weld burn through holes.

STANDARD PROCEDURE

STANDARD PROCEDURE - PLASTIC BODY PANEL REPAIR

There are many different types of plastics used in today's automotive environment. We group plastics in three different categories: Rigid, Semi-Rigid, and Flexible. Any of these plastics may require the use of an adhesion promoter for repair. These types of plastic are used extensively on DaimlerChrysler Motors vehicles. Always follow repair material manufacturer's plastic identification and repair procedures.

Rigid Plastics:

Examples of rigid plastic use: Fascias, Hoods, Doors, and other Body Panels, which include SMC, ABS, and Polycarbonates.

Semi-Rigid Plastics:

Examples of semi-rigid plastic use: Interior Panels, Under Hood Panels, and other Body Trim Panels.

Flexible Plastics:

Examples of flexible plastic use: Fascias, Body Moldings, and upper and lower Fascia Covers.

Repair Procedure:

The repair procedure for all three categories of plastics is basically the same. The one difference is the material used for the repair. The materials must be specific for each substrate, rigid repair material for rigid plastic repair, semi-rigid repair material for semi-rigid plastic repair and flexible repair material for flexible plastic repair.

Adhesion Promoter/Surface Modifier:

Adhesion Promoters/Surface Modifiers are required for certain plastics. All three categories may have plastics that require the use of adhesion promoter/surface modifiers. Always follow repair material manufacturer's plastic identification and repair procedures.

SAFETY PRECAUTION AND WARNINGS

WARNING:

- **EYE PROTECTION SHOULD BE USED WHEN SERVICING COMPONENTS. PERSONAL INJURY CAN RESULT.**
- **USE AN OSHA APPROVED BREATHING MASK WHEN MIXING EPOXY, GRINDING, AND SPRAYING PAINT OR SOLVENTS IN A CONFINED AREA. PERSONAL INJURY CAN RESULT.**
- **AVOID PROLONGED SKIN CONTACT WITH RESIN, PETROLEUM, OR ALCOHOL BASED SOLVENTS. PERSONAL INJURY CAN RESULT.**
- **DO NOT VENTURE UNDER A HOISTED VEHICLE THAT IS NOT PROPERLY SUPPORTED ON SAFETY STANDS. PERSONAL INJURY CAN RESULT.**

NOTE:

- **When holes must be drilled or cut in body panels, verify locations of internal body components and electrical wiring. Damage to vehicle can result.**
- **Do not use abrasive chemicals or compounds on undamaged painted surfaces around repair areas. Damage to finish can result.**

BODY (Continued)

RIGID, SEMI-RIGID, AND FLEXIBLE PLASTIC PARTS TYPES

CODE	FAMILY NAME	COMMON TRADE NAME	TYPICAL APPLICATION
ASA	ACRYLONITRILE STYRENE ACRYLITE	LURAN S	CONSOLES, GRILLES
ABS	ACRYLONITRILE BUTADIENE STYRENE	TERLURAN	″A″ PILLARS, CONSOLES, GRILLES
ABS/PC	ABS/PC ALLOY	PULSE, PROLOY, BAYBLEND	DOORS, INSTRUMENT PANELS
ABS/PVC	ABS/PV ALLOY	PROLOY, PULSE, LUSTRAN, CYCLOVIN	DOOR PANELS, GRILLES, TRIM
BMC	BULK MOLDING COMPOUND	BMC	FENDER EXTENSIONS
EMA	EHTYLENE METHYL ACRYLATE/IONOMER	SURLYN, EMA, IONOMER	BUMPER GUARDS, PADS
METTON	METTON	METTON	GRILLES, KICK PANELS, RUNNING BOARDS
MPPO	MODIFIED POLYPHENYLENE OXIDE	MPPO	SPOILER ASSEMBLY
PA	POLYAMID	ZYTEL, VYDYNE, PA, MINLON	FENDERS, QUARTER PANELS
PET	THERMOPLASTIC POLYESTER	RYNITE	TRIM
PBT/PPO	PBT/PPO ALLOY	GERMAX	CLADDINGS
PBTP	POLYBUTYLENE THEREPTHALATE	PBT, PBTP, POCAN, VALOX	WHEEL COVERS, FENDERS, GRILLES
PBTP/EEBC	POLYBUTYLENE THEREPTHALATE/EEBC ALLOY	BEXLOY, ″M″, PBTP/EEBC	FASCIAS, ROCKER PANEL, MOLDINGS
PC	POLYCARBONATE	LEXAN, MERLON, CALIBRE, MAKROLON PC	TAIL LIGHT LENSES, IP TRIM, VALANCE PANELS
PC/ABS	PC/ABS ALLOY	GERMAX, BAY BLENDS, PULSE	DOORS, INSTRUMENT PANELS
PPO	POLYPHENYLENE OXIDE	AZDEL, HOSTALEN, MARLEX, PRFAX, NORYL, GTX, PPO	INTERIOR TRIM, DOOR PANELS, SPLASH SHIELDS, STEERING COLUMN SHROUD
PPO/PA	POLYPHENYLENE/ POLYAMID	PPO/PA, GTX 910	FENDERS, QUARTER PANELS
PR/FV	FIBERGLASS REINFORCED PLASTIC	FIBERGLASS, FV, PR/FV	BODY PANELS
PS	POLYSTYRENE	LUSTREX, STYRON, PS	DOOR PANELS, DASH PANELS
RTM	RESIN TRANSFER MOLDING COMPOUND	RTM	BODY PANELS
SMC	SHEET MOLDED COMPOUND	SMC	BODY PANELS
TMC	TRANSFER MOLDING COMPOUND	TMC	GRILLES

BODY (Continued)

CODE	FAMILY NAME	COMMON TRADE NAME	TYPICAL APPLICATION
UP	UNSATURATED POLYESTER (THERMOSETTING)	SMC, BMC, TMC, ZMC, IMC, XSMC, UP	GRILLE OPENING PANEL, LIFTGATES, FLARESIDE FENDERS, FENDER EXTENSIONS
EEBC	ETHER/ESTER BLOCKED CO-POLYMER	EEBC	BUMPERS
EEBC/PBTP	EEBC/POLYBUTYLENE TEREPTHALATE	EEBC, PBTP, BEXLOY	BUMPER, ROCKER PANELS
EMPP	ETHYLENE MODIFIED POLYPROPYLENE	EMPP	BUMPER COVERS
EPDM	ETHYLENE/ PROPROPYLENE DIENE MONOMER	EPDM, NORDEL, VISTALON	BUMPERS
EPM	ETHYLENE/ PROPROPYLENE CO-POLYMER	EPM	FENDERS
MPU	FOAM POLYURETHANE	MPU	SPOILERS
PE	POLYETHYLENE	ALATHON, DYLAN, LUPOLEN, MARLEX	-
PP	POLYPROPYLENE (BLENDS)	NORYL, AZDEL, MARLOX, DYLON, PRAVEX	INNER FENDER, SPOILERS, KICK PANELS
PP/EPDM	PP/EPDM ALLOY	PP/EPDM	SPOILERS, GRILLES
PUR	POLYURETHANE	COLONELS, PUR, PU	FASCIAS, BUMPERS
PUR/PC	PUR/PC ALLOY	TEXIN	BUMPERS
PVC	POLYVINYL CHLORIDE	APEX, GEON, VINYLITE	BODY MOLDINGS, WIRE INSULATION, STEERING WHEELS
RIM	REACTION INJECTED MOLDED POLYURETHANE	RIM, BAYFLEX	FRONT FASCIAS, MODULAR WINDOWS
RRIM	REINFORCED REACTION INJECTED MOLDED	PUR, RRIM	FASCIAS, BODY PANELS, BODY TRIMS
TPE	THERMO POLYETHYLENE	TPE, HYTREL, BEXLOY-V	FASCIAS, BUMPERS, CLADDINGS
TPO	THERMOPOLYOLEFIN	POLYTROPE, RENFLEX, SANTOPRENE, VISAFLEX, ETA, APEX, TPO, SHIELDS, CLADDINGS	BUMPERS, END CAPS, TELCAR, RUBBER, STRIPS, SIGHT, INTERIOR B POST
TPP	THERMO-POLYPROPYLENE	TPP	BUMPERS
TPU	THERMOPOLYURETHANE, POLYESTER	TPU, HYTREL, TEXIN, ESTANE	BUMPERS, BODY SIDE, MOLDINGS, FENDERS, FASCIAS

BODY (Continued)

PANEL SECTIONING

If it is required to section a large panel for a plastic repair, it will be necessary to reinforce the panel (Fig. 1). To bond two plastic panels together, a reinforcement must overlap both panels. The panels must be "V'd" at a 20 degree angle. The area to be reinforced should be washed, then sanded. Be sure to wipe off any excess soap and water when finished. Lightly sand or abrade the plastic with an abrasive pad or sandpaper. Blow off any dust with compressed air or wipe with a clean dry rag.

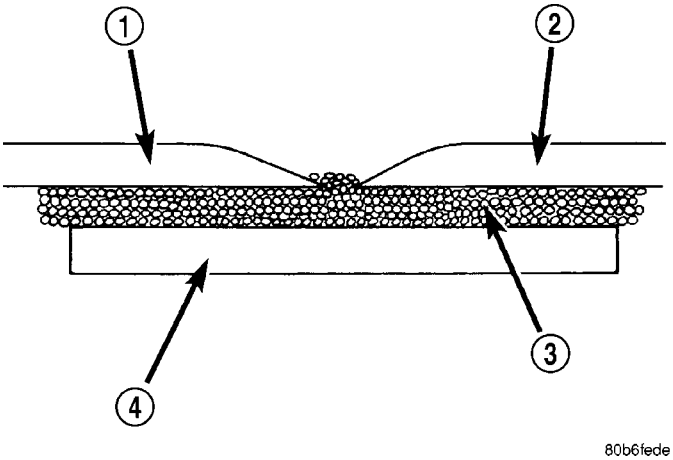

Fig. 1 PANEL SECTIONING

1 - EXISTING PANEL
2 - NEW PANEL
3 - PANEL ADHESIVE
4 - BONDING STRIP

When bonding plastic panels, Follow repair material manufacturers recommendations. Be sure that enough adhesive has been applied to allow squeeze out and to fill the full bond line. Once the pieces have been brought together, do not move them until the adhesive is cured. The assembly can be held together with clamps, rivets, etc. A faster cure can be obtained by heating with a heat lamp or heat gun. After the parts have been bonded and have had time to cure, rough sand the seam and apply the final adhesive filler to the area being repaired. Smooth the filler with a spreader, wooden tongue depressor, or squeegee. For fine texturing, a small amount of water can be applied to the filler surface while smoothing. The cured filler can be sanded as necessary and, as a final step, cleanup can be done with soapy water. Wipe the surface clean with a dry cloth allowing time for the panel to dry before moving on with the repair.

PANEL REINFORCEMENT

Structural repair procedures for rigid panels with large cracks and holes will require a reinforcement backing. Reinforcements can be made with several applications of glass cloth saturated with structural adhesive. Semi-rigid or flexible repair materials should be used for semi-rigid or flexible backing reinforcement (Fig. 2) and (Fig. 3). Open meshed fiberglass dry wall tape can be used to form a reinforcement. The dry wall tape allows the resin to penetrate through and make a good bond between the panel and the adhesive. Structurally, the more dry wall tape used, the stronger the repair.

Another kind of repair that can be done to repair large cracks and holes is to use a scrap piece of similar plastic and bond with structural adhesive. The reinforcement should cover the entire break and should have a generous amount of overlap on either side of the cracked or broken area.

When repairing plastic, the damaged area is first "V'd" out, or beveled. Large bonding areas are desirable when repairing plastic because small repairs are less likely to hold permanently. Beveling the area around a crack at a 20 degree angle will increase the bonding surface for a repair (Fig. 4). It is recommended that sharp edges be avoided because the joint may show through after the panel is refinished.

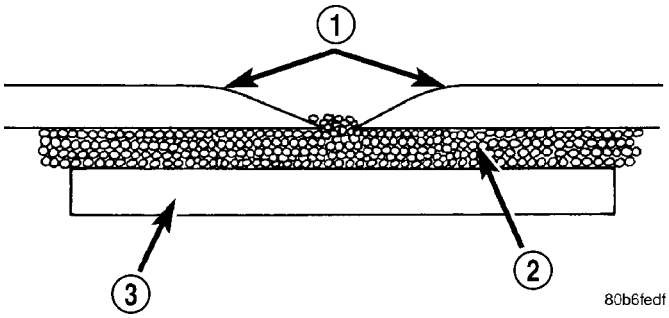

Fig. 2 SOFTENED EDGES

1 - SOFTENED EDGES
2 - PANEL ADHESIVE
3 - BONDING STRIP

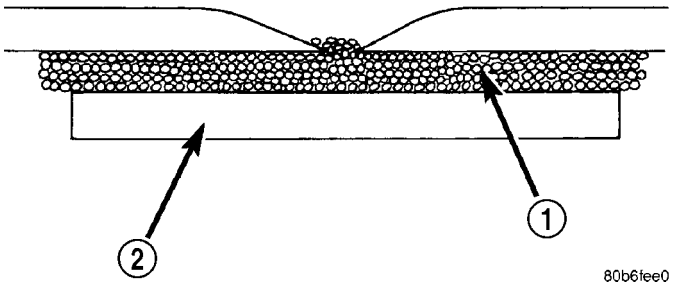

Fig. 3 PANEL REINFORCEMENT

1 - PANEL ADHESIVE
2 - REINFORCEMENT

- Panel repair for both flexible and rigid panels are basically the same. The primary difference between flexible panel repair and rigid panel repair is in the adhesive materials used (Fig. 5).
- The technician should first decide what needs to be done when working on any type of body panel.

BODY (Continued)

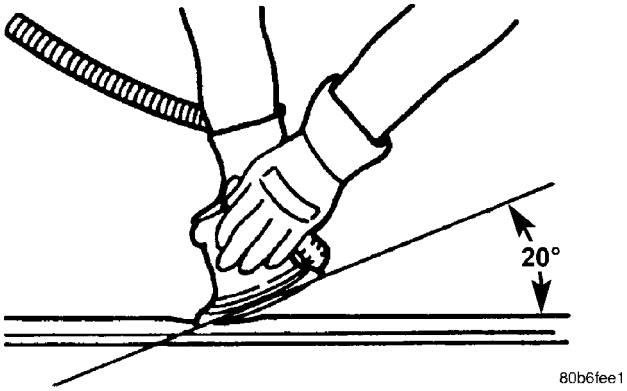

Fig. 4 BEVELING ANGLE - 20 DEGREE

One should determine if it is possible to return the damage part to its original strength and appearance without exceeding the value of the replacement part.

- When plastic repairs are required, it is recommended that the part be left on the vehicle when every possible. That will save time, and the panel will remain stationary during the repair. Misalignment can cause stress in the repair areas and can result in future failure.

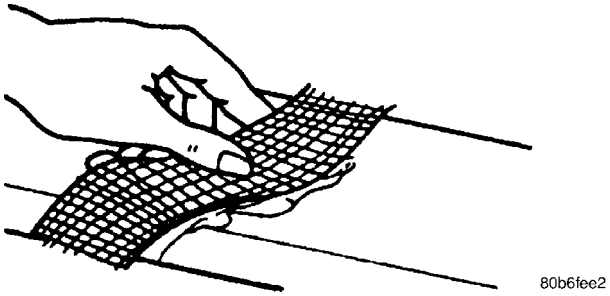

Fig. 5 FIBERGLASS TAPE

VISUAL INSPECTION

Composite materials can mask the severity of an accident. Adhesive bond lines, interior structure of the doors, and steel structures need to be inspected carefully to get a true damage assessment. Close inspection may require partial removal of interior trim or inner panels.

Identify the type of repair: Puncture or Crack - Damage that has penetrated completely through the panel. Damage is confined to one general area; a panel section is not required. However, a backer panel, open fiberglass tape, or matted material must be bonded from behind (Fig. 7) (Fig. 6).

PANEL SURFACE PREPARATION

If a body panel has been punctured, cracked, or crushed, the damaged area must be removed from the panel to achieve a successful repair. All spider web cracks leading away from a damaged area must be stopped or removed. To stop a running crack in a panel, drill a 6 mm (0.250 in.) hole at the end of the crack farthest away from the damage. If spider web cracks can not be

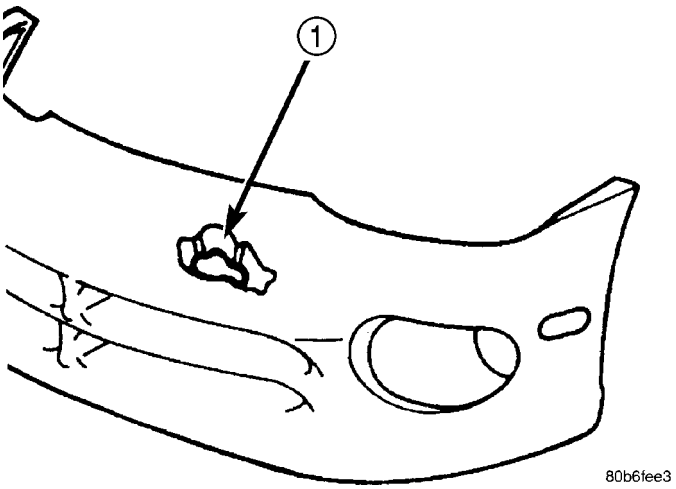

Fig. 6 DAMAGE COMPONENT

1 - PUNCTURE

stopped, the panel would require replacement. The surfaces around the damaged area should be stripped of paint and freed from wax and oil. Scuff surfaces around repair area with 360 grit wet/dry sandpaper, or equivalent, to assure adhesion of repair materials.

PATCHING PANELS

An panel that has extensive puncture type damage can be repaired by cutting out the damaged material (Fig. 7). Use a suitable reciprocating saw or cut off wheel to remove the section of the panel that is damaged. The piece cut out can be used as a template to shape the new patch. It is not necessary to have access to the back of the panel to install a patch. Bevel edges of cutout at 20 degrees to expose a larger bonding area on the outer side. This will allow for an increased reinforcement areas.

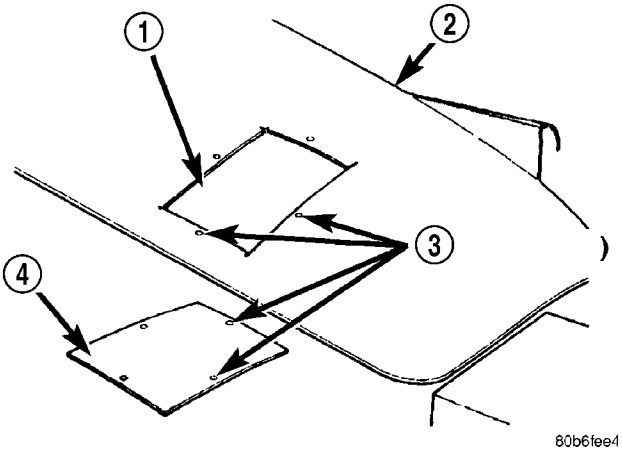

Fig. 7 DAMAGED PANEL CUTOUT AND PATCH

1 - CUTOUT
2 - DAMAGED BODY PANEL
3 - 4 MM (0.160 IN.) HOLES
4 - PATCH CUT TO SIZE

BODY (Continued)

PANEL PATCH FABRICATIONS

A patch can be fabricated from any rigid fiberglass panel that has comparable contour with the repair area. Lift gates and fenders can be used to supply patch material. If existing material is not available or compatible, a patch can be constructed with adhesive and reinforcement mesh (dry wall tape). Perform the following operation if required:

(1) Cover waxed paper or plastic with adhesive backed nylon mesh (dry wall tape) larger than the patch required (Fig. 8).

(2) Tape waxed paper or plastic sheet with mesh to a surface that has a compatible contour to the repair area.

(3) Apply a liberal coat of adhesive over the reinforcement mesh (Fig. 8). If necessary apply a second or third coat of adhesive and mesh after firs coat has cured. The thickness of the patch should be the same as the repair area.

(4) After patch has cured, peel waxed paper or plastic from the back of the patch.

(5) If desired, a thin film coat of adhesive can be applied to the back of the patch to cover mesh for added strength.

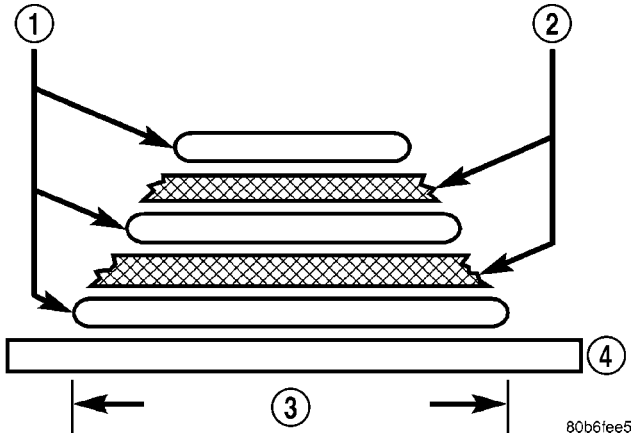

Fig. 8 FABRICATED PANEL

1 - STRUCTURAL ADHESIVE
2 - FIBERGLASS CLOTH OR FIBERGLASS MESH TAPE
3 - WIDTH OF V-GROOVE
4 - WAXED PAPER

PANEL PATCH INSTALLATION

(1) Make a paper or cardboard pattern the size and shape of the cutout hole in the panel.

(2) Trim 3 mm (0.125 in.) from edges of pattern so patch will have a gap between connecting surfaces.

(3) Using the pattern as a guide, cut the patch to size.

(4) Cut scrap pieces of patch material into 50 mm (2 in.) squares to use as patch supports to sustain the patch in the cutout.

(5) Drill 4 mm (0.160 in.) holes 13 mm (0.5 in.) in from edge of cutout hole (Fig. 7).

(6) Drill 4 mm (0.160 in.) holes 13 mm (0.5 in.) away from edge of patch across from holes drilled around cutout.

(7) Drill 3 mm (0.125 in.) holes in the support squares 13 mm (0.5 in.) from the edge in the center of one side.

(8) Scuff the backside of the body panel around the cutout hole with a scuff pad or sandpaper.

(9) Mix enough adhesive to cover one side of all support squares.

(10) Apply adhesive to cover one side of all support squares.

(11) Using number 8 sheet metal screws, secure support squares to back side of body panel with adhesive sandwiched between the panel and squares (Fig. 9).

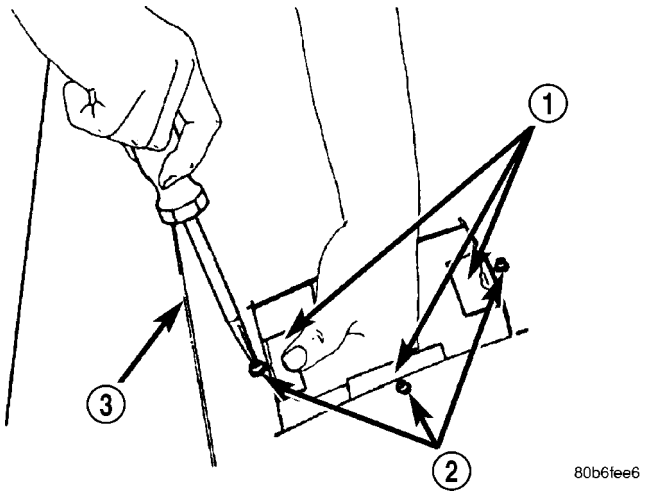

Fig. 9 SECURE SUPPORT SQUARES TO BODY PANEL

1 - SUPPORT SQUARES
2 - SCREWS
3 - DAMAGED BODY PANEL

BODY (Continued)

(12) Position patch in cutout against support squares and adjust patch until the gap is equal along all sides (Fig. 10).

(13) Drill 3 mm (0.125 in.) holes in the support squares through the pre-drilled holes in the patch.

(14) Apply a coat of adhesive to the exposed ends of the support squares (Fig. 11).

(15) Install screws to hold the patch to support squares (Fig. 12). Tighten screws until patch surface is flush with panel surface.

(16) Allow adhesive to cure, and remove all screws.

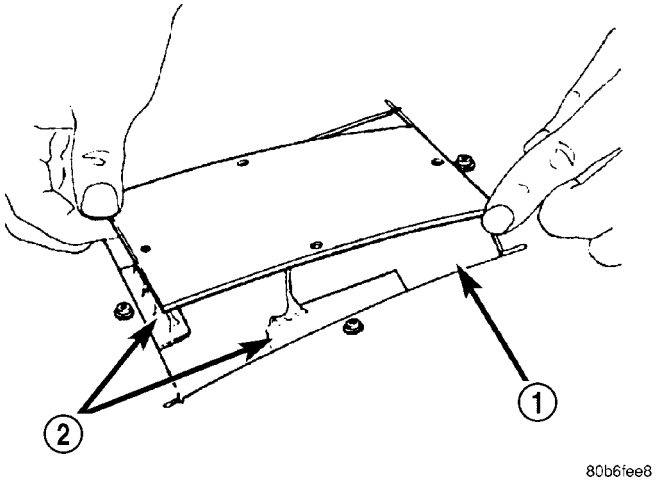

Fig. 10 POSITION PATCH IN CUTOUT AND ALIGN

1 - CUTOUT
2 - SUPPORT SQUARES

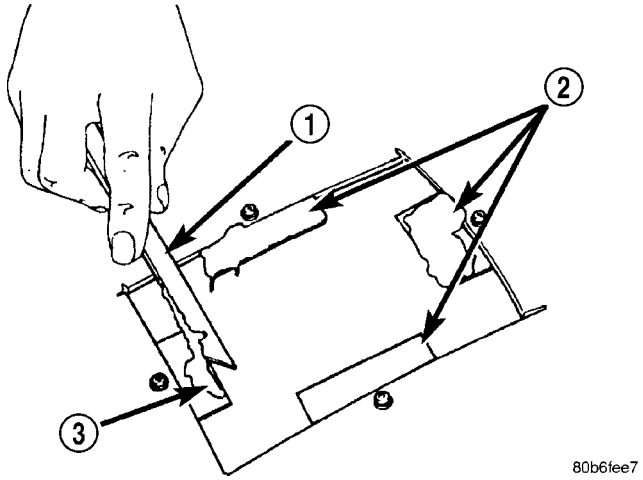

Fig. 11 APPLY ADHESIVE TO SUPPORT SQUARES

1 - APPLICATOR
2 - SUPPORT SQUARES
3 - ADHESIVE

(17) Using a 125 mm (5 in.) 24 grit disc grinder, grind a 50 mm (2 in.) to 75 mm (3 in.) wide and 2 mm (0.080 in.) deep path across the gaps around the patch (Fig. 13). With compressed air, blow dust from around patch.

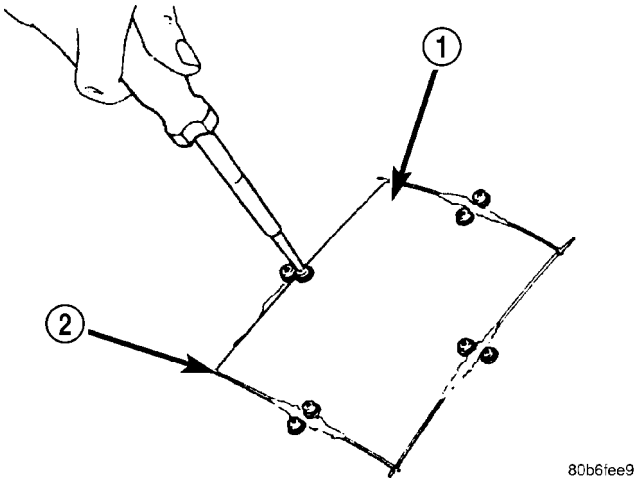

Fig. 12 INSTALL SCREWS

1 - PATCH
2 - GAP

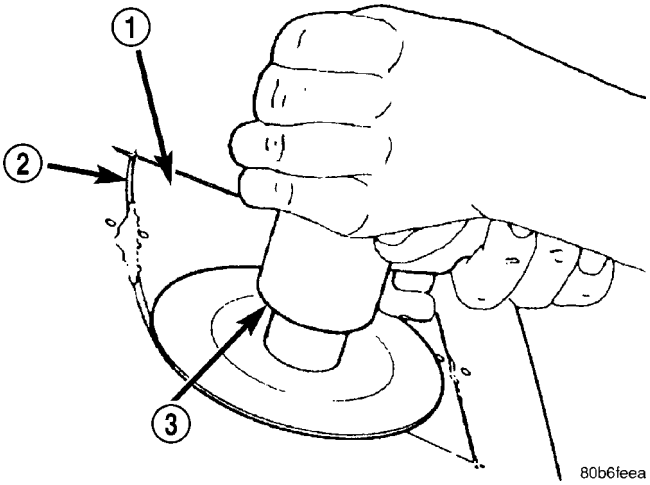

Fig. 13 GRIND SURFACE

1 - PATCH
2 - GAP
3 - DISC GRINDER

BODY (Continued)

(18) Apply adhesive backed nylon mesh (dry wall tape) over gaps around patch (Fig. 14).

(19) Mix enough adhesive to cover the entire patch area.

(20) Apply adhesive over the mesh around patch, and smooth epoxy with a wide spreader to reduce finish grinding. Use two to three layers of mesh and adhesive to create a stronger repair (Fig. 15).

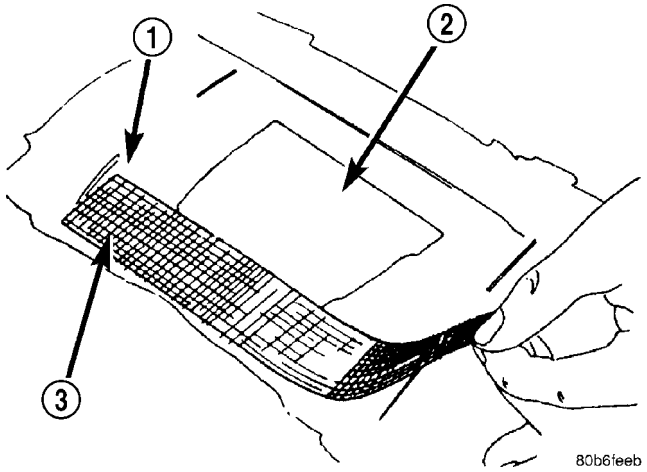

Fig. 14 COVER GAPS WITH MESH

1 - GROUND DOWN AREA
2 - PATCH
3 - MESH

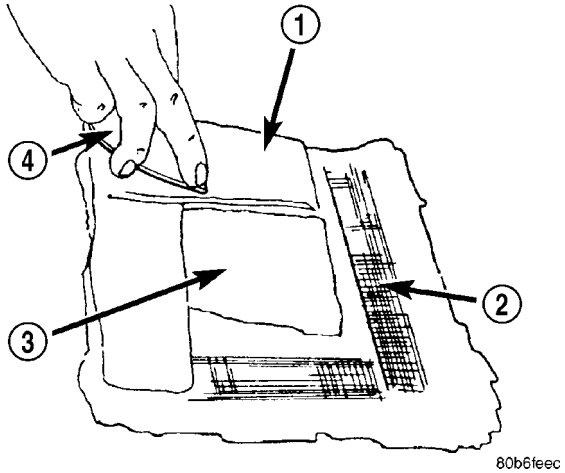

Fig. 15 COVER MESH WITH ADHESIVE

1 - ADHESIVE
2 - MESH
3 - PATCH
4 - SPREADER

PATCHED PANEL SURFACING

After patch panel is installed, the patch area can be finished using the same methods as finishing other types of body panels. If mesh material is exposed in the patched area, grind surface down, and apply a coat of high quality rigid plastic body filler. Prime, block sand, and paint as required.

STANDARD PROCEDURE - HEAT STAKING

(1) Remove trim panel.

(2) Bend or move the trim panel components at the heat staked joints. Observe the heat staked locations and/or component seams for looseness.

(3) Heat stake the components.

(a) If the heat staked or component seam location is loose, hold the two components tightly together and using a soldering gun with a flat tip, melt the material securing the components together. Do not over heat the affected area, damage to the exterior of the trim panel may occur.

(b) If the heat staked material is broken or missing, use a hot glue gun to apply new material to the area to be repaired. The panels that are being heat staked must be held together while the applying the glue. Once the new material is in place, it may be necessary to use a soldering gun to melt the newly applied material. Do not over heat the affected area, damage to the exterior of the trim panel may occur.

(4) Allow the repaired area to cool and verify the repair.

(5) Install trim panel.

SPECIFICATIONS

BODY LUBRICATION

LUBRICATION REQUIREMENTS

Body mechanisms and linkages should be inspected, cleaned, and lubricated, as required, to maintain ease of operation and to provide protection against rust and wear. When performing other under hood services, the hood latch release mechanism and safety catch should be inspected, cleaned, and lubricated. During the winter season, external door lock cylinders should be lubricated to assure proper operation when exposed to water and ice.

Prior to the application of any lubricant, the parts concerned should be wiped clean to remove dust and grit. If necessary, a suitable solvent can be used to clean the item to be lubricated. After lubricating a component, any excess oil or grease should be removed.

LUBRICANT APPLICATION

DOOR LOCK CYLINDERS

(1) Apply a small amount of lubricant directly into the lock cylinder.

(2) Apply a small amount of lubricant to the key.

(3) Insert key into lock cylinder and cycle the mechanism from the locked to the unlocked position.

NOTE: Do not add more lubricant.

BODY (Continued)

(4) Cycle the lock cylinder mechanism several times to allow the lubricant to flow throughout the cylinder.

(5) Wipe all lubricant from exterior of lock cylinder and key.

ALL OTHER BODY MECHANISMS

(1) Clean component as described above.

(2) Apply specified lubricant to all pivoting and sliding contact areas of component.

LUBRICANT USAGE

ENGINE OIL

- Door Hinges – Hinge Pin and Pivot Contact Areas
- Hood Hinges – Pivot Points
- Liftgate Hinges

MOPAR® SPRAY WHITE LUBE OR EQUIVALENT

- Door Check Straps
- Liftgate Latches
- Liftgate Prop Pivots
- Ash Receiver
- Fuel Filler Door Remote Control Latch Mechanism
- Parking Brake Mechanism
- Sliding Seat Tracks
- Liftgate Latch

MOPAR® Multipurpose GREASE OR EQUIVALENT

- All Other Hood Mechanisms

MOPAR® LOCK CYLINDER LUBRICANT OR EQUIVALENT

- Door Lock Cylinders
- Liftgate Lock Cylinder

SPECIFICATIONS - TORQUE

TORQUE SPECIFICATIONS

DESCRIPTION	N·m	Ft. Lbs.	In. Lbs.
Front seat track to floor pan bolts	61	45	—
Front seat inboard pivot bolt	40	30	—
Front seat recliner to seat cushion frame	12	9	—
Front seat track to cushion frame bolts	12	9	—
Front seat back	45	34	—
Front seat back recliner to seat back	12	9	—
Front seat belt buckle anchor nut	40	29	—
Front seat belt retractor bolt	38	28	—
Front seat belt buckle anchor bolt	40	29	—
Front door hinge to hinge pillar bolts	28	20	—
Front door hinge to door nuts	28	20	—
Front door latch striker	28	20	—
Front seat rear outboard seat track to floor pan bolts	28	20	—
Decklid latch striker	22	16	—
Rear door glass to regulator bolt	11	—	100
Rear door hinge to B-pillar bolt	28	20	—
Rear door hinge to door bolt	28	20	—
Rear door latch striker	28	20	—
Rear seat back outer bracket nuts	61	45	—
Shifter nob set screw	3	—	23
Sunroof module to roof panel	11	—	100

BODY (Continued)

SPECIAL TOOLS

BODY

INDEX

DESCRIPTION	FIGURE
STICK, TRIM C 4755	16
REMOVER, MOLDINGS C-4829	17
PLIERS, HEADLINER CLIP 6967	18

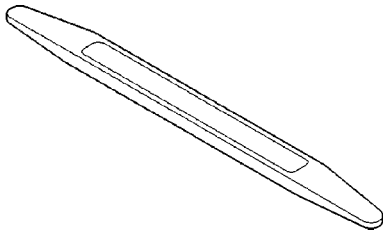

Fig. 16 STICK, TRIM C 4755

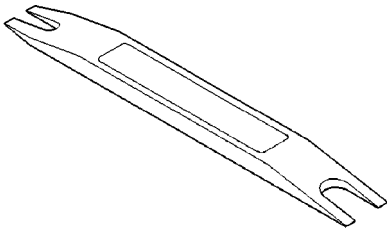

Fig. 17 REMOVER, MOLDINGS C-4829

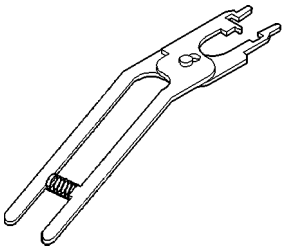

Fig. 18 PLIERS, HEADLINER CLIP 6967

CONVERTIBLE TOP

TABLE OF CONTENTS

page

CONVERTIBLE TOP
DIAGNOSIS AND TESTING - HYDRAULIC SYSTEMS 13
ADJUSTMENTS
ADJUSTMENT - CONVERTIBLE TOP 14
ADJUSTMENT - HYDRAULIC MOTOR/PUMP BLEEDING PROCEDURES 14
ADJUSTMENT - TOP FRAME CAM 15
ADJUSTMENT - BALANCE LINK 16
ADJUSTMENTS - DOWEL PIN 16
SPECIFICATIONS - CONVERTIBLE TOP TORQUE 17
FOLDING TOP COVER
REMOVAL 17
INSTALLATION 18
TOP HEADLINING
REMOVAL 18
INSTALLATION 18
HYDRAULIC CYLINDER
REMOVAL 19
INSTALLATION 19
HYDRAULIC LINES
REMOVAL 19
INSTALLATION 19
HYDRAULIC MOTOR/PUMP ASSEMBLY
REMOVAL 20
INSTALLATION 20
CONVERTIBLE TOP REAR WINDOW
REMOVAL 20
INSTALLATION 21
CONVERTIBLE TOP STORAGE
REMOVAL 22
INSTALLATION 22

CONVERTIBLE TOP

DIAGNOSIS AND TESTING - HYDRAULIC SYSTEMS

The power convertible top hydraulic system consists of:

- Two hydraulic cylinders
- Hydraulic lines
- Electric hydraulic pump and reservoir
- Dual relays

HYDRAULIC SYSTEM TESTS

NOTE: The convertible top will raise slowly or make abnormal noise if the hydraulic fluid level is low.

(1) Remove rear seat cushion and back.

(2) With the top down, remove motor assembly from the floor panel.

(3) Remove the reservoir fill plug

(4) Visually inspect fluid level. The fluid level should be at least at the bottom edge of fill hole, when motor bracket is held on a level (flat) surface. If low, inspect for leak in hydraulic system.

(5) Motor/Pump:

(a) Put reservoir fill plug back in place. Apply power to the motor and listen for operation. If the motor fails to run, check the voltage to the connector (10.5 to 16 volts required). Voltage below 12.6 volts will cause top to operate slowly.

(b) Check the motor/pump for evidence of fluid leak. If leakage is seen and fittings/hoses and cylinders don't have any leaks, then replace the motor/pump.

(6) Cylinders:

(a) Check cylinder tubes for dents.

(b) Check cylinders for leaks. Leaks are indicated by hydraulic fluid running down the cylinders. Small oil residue accumulation at seal is normal.

(7) Repair or replace components, as necessary.

(8) Bleed the motor/pump (Refer to 23 - BODY/CONVERTIBLE TOP - ADJUSTMENTS - HYDRAULIC MOTOR/PUMP BLEEDING PROCEDURES).

(9) Secure motor/pump assembly into floor panel mounts.

(10) Raise top.

(11) Lower top and verify fluid level per step three. If low, add Dexron III Automatic Transmission Fluid as necessary. Do not overfill reservoir.

(12) Install rear seat back and cushion making sure these components do not cause hydraulic line pinches and/or kinks.

(13) Verify system operation.

CONVERTIBLE TOP (Continued)

ADJUSTMENTS

ADJUSTMENT - CONVERTIBLE TOP

Refer to (Fig. 1) to determine which adjustment is required. Refer to the appropriate procedure for more information.

ADJUSTMENT - HYDRAULIC MOTOR/PUMP BLEEDING PROCEDURES

After replacing any component of the power lift mechanism or if convertible top does not start to raise within 2 seconds after the switch is activated, bleed the convertible top motor/pump assembly.

(1) Raise the top to the full up position. Do not latch folding top.

(2) Remove the rear seat cushion, seat back and quarter trim panels.

(3) Completely detach cylinders from attachment points (mounting bracket nuts and pivot bolts attaching cylinder shafts to top linkage). Cylinders will be extended.

(4) Remove motor from floor panel. Keep motor connected to wire harness.

(5) Hold cylinders upside down (cylinder rod pointing down).

(6) Hold motor/pump assembly with reservoir up. The rubber fill plug will be at the top.

(7) Raise motor/pump assembly to at least 2 inches above the horizontal rear seat back reinforcement.

(8) Cycle system at least once, making sure cylinders can extend without obstruction. Allow for two to three seconds stall. There may be a percolating or gurgling sound, which indicates that the procedure is working.

(9) Hold cylinders in normal position and cycle system at lease once, making sure cylinders can extend without obstruction. Allow for two to three seconds stall. There may be a percolating or gurgling sound, which indicates that the procedure is working.

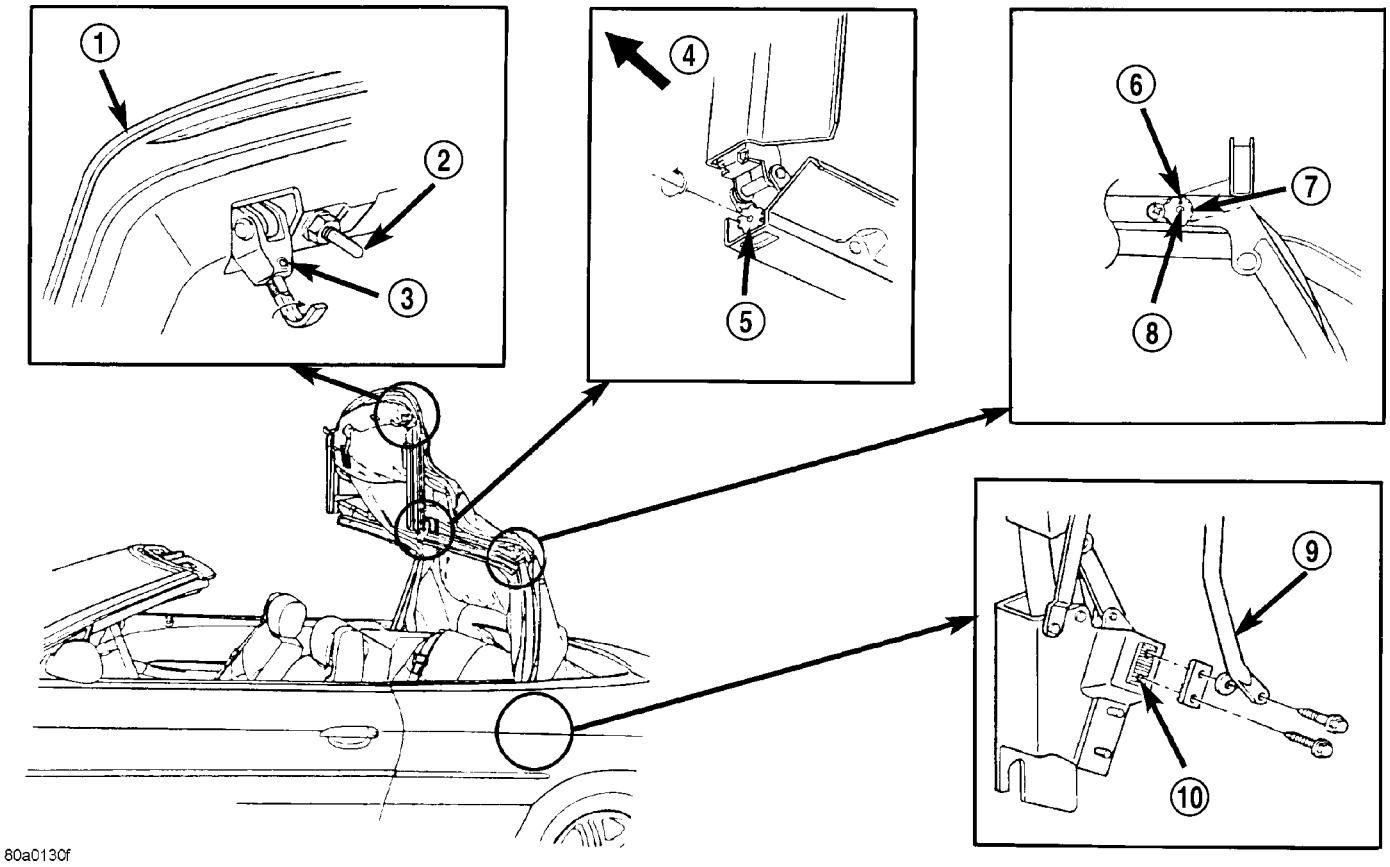

Fig. 1 ADJUSTMENT LOCATIONS

1 - TOP HEADER
2 - DOWEL PIN
3 - SET SCREW
4 - FRONT
5 - FRONT-TO-CENTER RAIL ADJUSTING SCREW
6 - TURN DART TOWARD REAR (HEADER MOVES FORWARD AND UP)
7 - CAM
8 - TURN DART TOWARD FRONT (HEADER MOVES REARWARD AND UP)
9 - BALANCE LINK
10 - SERRATED PLATE

CONVERTIBLE TOP (Continued)

At this point, any air in the system has migrated to the reservoir.

(10) Retract cylinders completely and remove the rubber fill plug from reservoir. Fluid level may be low.

(11) Remove the rubber fill plug from reservoir. Fluid level may be low.

CAUTION: THE MOTOR/PUMP ASSEMBLY MUST REMAIN IN THE CURRENT POSITION UNTIL THE RUBBER FILLER PLUG IS REINSTALLED.

(12) Fill the hydraulic system by adding Dexron III Automatic Transmission Fluid to the reservoir. The fluid level should be 13 to 20 mm (½ to ¾ inch) below the top of the reservoir.

CAUTION: DO NOT OPERATE THE FOLDING TOP SWITCH WHILE FILL PLUG IS NOT INSTALLED ON MOTOR ASSEMBLY.

(13) Install rubber fill plug.

(14) Secure motor/pump assembly into floor panel mounts. Extend cylinders.

(15) Place the cylinders into original position with hose fittings pointing fitting rearward.

(16) Install pivot bolt attaching cylinder shaft to top linkage. Torque properly. Ensure all rod eye components are present (foam, plastic bushing and plastic lock washer).

(17) Install cylinder mounting bracket and nut. Torque properly. Ensure all trunnion split bushings are present. Tap folding top switch to adjust cylinder length, if needed.

WARNING: HYDRAULIC CYLINDERS PRODUCE ENOUGH FORCE TO PRODUCE SEVERE INJURY IN CASE OF PUNCHING. KEEP HANDS AND FINGERS AWAY FROM MOVING HYDRAULIC CYLINDERS.

(18) Install all hydraulic line clips and secure hydraulic lines to body.

(19) Verify system operation.

(20) Install the quarter trim panels.

(21) Install rear seat back and cushion and ensure that the seat back/seat cushion do not pinch or kick the lines.

(22) Verify system operation.

ADJUSTMENT - TOP FRAME CAM

The top frame cam changes forward or rearward position of the top header in relation to the windshield header. The cam turns inside the rear side rail and thrust link (Fig. 2). It may be necessary to lengthen the balance links 1 or 2 serrations after a cam adjustment. The position of the cam high side determines the angle between the center and rear side rails. When the high side is fully forward, the angle is at a minimum, and when turned rearward, the angle is increased. An increased angle increases the forward movement of the top. The cam high side is indicated by a arrow on the cam threaded end.

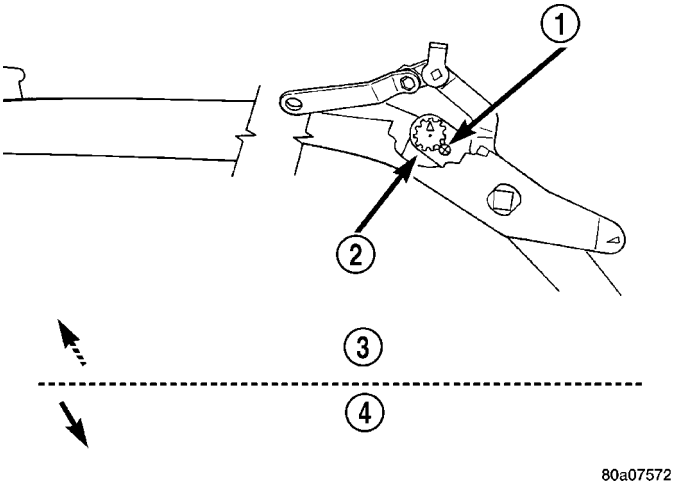

Fig. 2 CAM ASSEMBLY

1 - TORX SCREW
2 - CAM
3 - TURN DART TOWARDS REAR OF CAR HEADER MOVES IN THIS DIRECTION
4 - TURN DART TOWARDS FRONT OF CAR HEADER MOVES IN THIS DIRECTION

TO ADJUST CAM SETTING

(1) Lower top to half down position to remove all possible strain from the cam.

(2) Remove Torx head screw.

(3) Using appropriate Torx bit, rotate cam as necessary and secure set screw. Tighten Torx bit screw to 5.2 to 7.2 N·m (43 to 67 in. lbs.) torque

CONVERTIBLE TOP (Continued)

ADJUSTMENT - BALANCE LINK

WARNING: DO NOT PLACE HANDS OVER GAPS IN MOVABLE CONVERTIBLE TOP COMPONENTS DURING SERVICING. PERSONAL INJURY CAN RESULT.

(1) Remove quarter trim panel to gain access to balance link bolts.

(2) With the top latched in up position, loosen both bolts just enough to permit moving link up or down (Fig. 3).

(3) Push upward in the area of the front to center rail joint. Push rails up by hand as far as possible.

(4) With the balance link adjusting bolts loosened, allow the balance link to seek proper position.

(5) Tighten top link bolt while rail is held in position to 11.7 to 17.7 N·m (105 to 155 in. lbs.) torque.

(6) Tighten bottom link bolt while rail is held in position to 22 to 32 N·m (192 to 288 in. lbs.) torque.

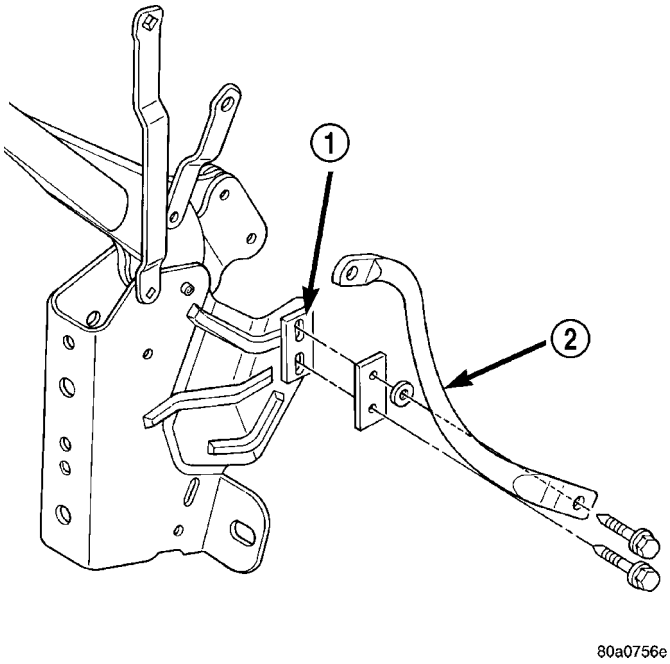

Fig. 3 BALANCE LINK ADJUSTMENT

1 - SERRATED PLATE
2 - BALANCE LINK

ADJUSTMENTS - DOWEL PIN

(1) Loosen dowel pins (Fig. 4).

(2) Position dowel pins to the center of the receiver holes in the windshield header.

(3) Tighten dowel pins and verify adjustment.

NOTE: Refer to Cam Adjustment or Balance Link Adjustment paragraphs of this section to adjust forward or rearward position of the top header.

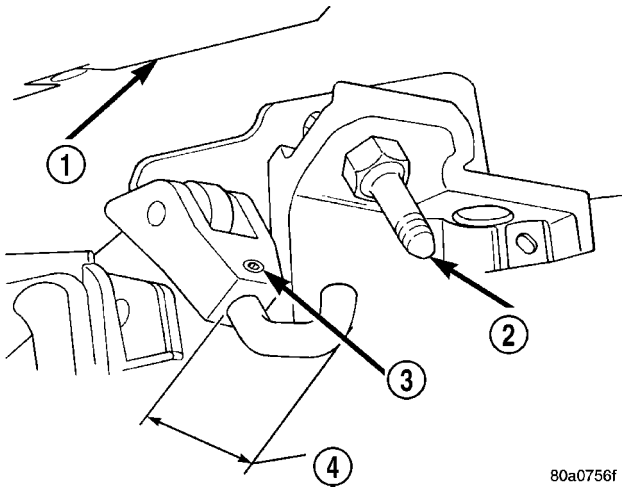

Fig. 4 ROOF LATCH AND GUIDE DOWEL PIN

1 - HEADER
2 - DOWEL PIN
3 - SET SCREW
4 - 25.4 mm MIN
35.56 mm MAX

CONVERTIBLE TOP (Continued)

SPECIFICATIONS - CONVERTIBLE TOP TORQUE

TORQUE SPECIFICATIONS

DESCRIPTION	N·m	Ft. Lbs.	In. Lbs.
SEAL RETAINER TO CASTINGS	2.8 TO 4	25 TO 35	-
BOWS TO BRACKETS	8.2 TO 12.2	70 TO 110	-
DOWEL PIN	11.7 TO 17.7	104 TO 156	-
SET SCREW (LATCH HOOK)	2.4 TO 4.4	21 TO 39	-
BALANCE LINK - TOP	11.7 TO 17.7	105 TO 155	-
BALANCE LINK - BOTTOM	22 TO 32	192 TO 288	-
CAM ASSEMBLY - TORX SCREW	5.2 TO 7.2	43 TO 67	-
LATCH ASSEMBLY	10 TO 14	85 TO 125	-
CASTING (DOWEL PIN RECEIVER)	22 TO 28	195 TO 147	-
CYLINDER - ROD END	22 TO 28	195 TO 147	-
CYLINDER - LOWER PIVOT	22 TO 28	195 TO 147	-
PIVOT BRACKET (TOP ASSEMBLY TO BODY)	22 TO 28	195 TO 147	-
TACK STRIP	12 TO 18	180 TO 132	-

FOLDING TOP COVER

REMOVAL

(1) Release folding top latches and allow top cover to relax.
(2) Remove tack strip trim panel.
(3) Remove headlining screw to tack strip.
(4) Remove all convertible top storage area sections.
(5) Remove nuts holding tack strip to deck panel.
(6) Remove tack strip from deck panel.

CAUTION: Cover all painted and upholstered surfaces to avoid damage while performing the following operations.

(7) Reposition tack strip above rear deck and quarter panels.
(8) Using a grease pencil, mark location of outer top cover on rear tack strip to aid installation.
(9) Remove staples holding top cover to rear tack strip.
(10) Fold rear of top cover, tack strips and rear window up and over the third (rear) roof bow.
(11) Remove screws holding roof rail tension cable springs to rear rail behind quarter glass opening.
(12) Pull side rail rear weatherstrips from weatherstrip retainer channels.
(13) Remove screws holding rear weatherstrip retainer channels to convertible top mechanism.
(14) Separate rear weatherstrip retainer channels from vehicle.
(15) Remove top cover listing from adhesive on roof rail.
(16) Raise folding top to the mid point.
(17) Remove screws holding convertible top header feature strip to header panel.
(18) Mark location of top cover on top header.
(19) Remove staples holding top cover to header.
(20) Remove screws in end of roof bow.
(21) Slide convertible top plastic retainer strips from channels in roof bows.
(22) Close folding top, do not latch.
(23) Slide tension cable out of cable pocket.
(24) Disengage roof rail tension cables from header.
(25) Remove top cover from vehicle.

FOLDING TOP COVER (Continued)

INSTALLATION

(1) Position convertible top cover on vehicle.
(2) Slide tension cable through cable pocket.
(3) Install rubber plugs holding roof rail tension cable ends into key hole slots in roof rails.
(4) Install roof bows to convertible top mechanism.
(5) Snap convertible top plastic retainer strips into channels in roof bows, starting at rear bow and working forward.
(6) Install screws at ends of roof bows.
(7) Raise convertible top to mid point.
(8) Align top cover to mark made previously on header.
(9) Install staples to hold top cover to header. The header uses both 3/16 and 1/4 inch staples. The 3/16 staples are used everywhere except the outboard corners where the blinding wraps around, at that point the 1/4 inch staple is used.
(10) Install screws holding convertible top header feature strip to header panel.
(11) Install screws holding roof rail tension cable springs to roof rear roof rail behind quarter glass opening.
(12) Align mark made on rear of top cover and rear window to tack strip.
(13) Install staples holding rear of top cover and rear window to tack strip.
(14) Position tack strip to rear deck panel.
(15) Install nuts holding tack strip to rear deck panel.
(16) Install headlining screw to tack strip.
(17) Install all convertible top storage area sections.
(18) Install tack strip trim panel.
(19) Lower quarter glass.
(20) Lower and secure convertible top.
(21) Apply suitable adhesive to side rail rear section to attach top cover listing.
(22) Pull top cover listing taunt and secure to adhesive on rear side rail.
(23) Install side rail rear weatherstrip retainer channels.
(24) Install side rail rear weatherstrips.
(25) Verify fit and operation. Adjust as necessary.

TOP HEADLINING

REMOVAL

(1) Raise convertible top to midway position.
(2) Remove convertible top header trim panel.
(3) Remove screws attaching headlining to convertible top header panel.
(4) Remove push in fasteners attaching headlining to convertible top mechanism rearward of quarter window.
(5) Remove tack strip trim panel.
(6) Remove shock cords along both sides of headlining.
(7) Remove roof bows from convertible top mechanism.
(8) Slide roof bows from convertible top cover and headlining.
(9) Remove nuts holding headlining straps to tack strip.
(10) Disengage hook and loop fasteners holding headlining above rear window.
(11) Remove headlining from vehicle.

INSTALLATION

(1) Position headlining from vehicle.
(2) Engage hook and loop fasteners holding headlining above rear window.
(3) Install nuts attaching headlining straps to tack strip.
(4) Install roof bows from convertible top mechanism.
(5) Snap plastic retainer strips on headlining and convertible top cover into channels on roof bows, working from rear bow forward.
(6) Install shock cords along both sides of headlining.
(7) Install tack strip trim panel.
(8) Install push in fasteners attaching headlining to convertible top mechanism rearward of quarter window.
(9) Install screws attaching headlining to convertible top header panel.
(10) Install convertible top header trim panel.
(11) Lower and secure convertible top.

HYDRAULIC CYLINDER

REMOVAL

(1) Place the top in the up position
(2) Disconnect battery negative terminal.
(3) Remove rear seat cushion and rear seat back.
(4) Remove quarter trim panel.
(5) Remove cylinder mounting bracket and nut (Fig. 5).
(6) Remove pivot bolt attaching cylinder shaft to top linkage.
(7) Remove motor/pump assembly from floor panel. Holding motor/pump assembly with reservoir up, squeeze fill plug to release any air pressure from system.
(8) Disconnect hydraulic lines from the cylinder.
(9) Remove cylinder from vehicle.

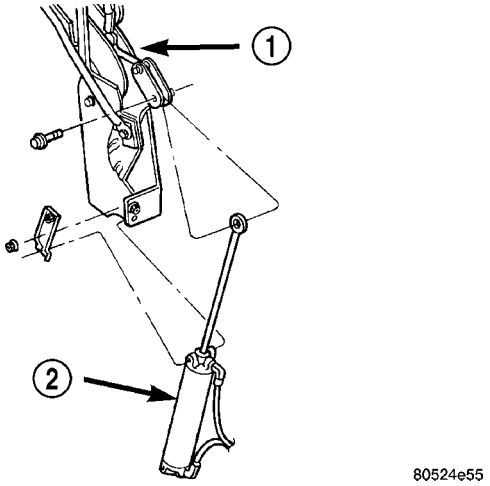

Fig. 5 HYDRAULIC CYLINDER

1 - CONVERTIBLE TOP LOWER PIVOT
2 - HYDRAULIC CYLINDER

INSTALLATION

(1) Place cylinder into position.
(2) Connect hydraulic lines to the cylinder. Tighten fittings to 8.5 to 9.5 N·m (75 to 84 in. lbs.) torque.
(3) Install pivot bolt attaching cylinder shaft to top linkage. Tighten pivot bolt to 22 to 28 N·m (195 to 147 in. lbs.) torque.
(4) Install cylinder mounting bracket and nut. Tighten bracket nut to 22 to 28 N·m (195 to 147 in. lbs.) torque.
(5) Connect battery negative terminal.
(6) Apply power and lower the top to about half way down position.
(7) Holding motor/pump assembly with the reservoir up, squeeze fill plug to release any air pressure from the system. Lower top all the way down and release air pressure again by squeeze fill plug.
(8) Bleed system (Refer to 23 - BODY/CONVERTIBLE TOP - ADJUSTMENTS - HYDRAULIC MOTOR/PUMP BLEEDING PROCEDURES).
(9) Secure motor/pump assembly into floor panel mounts.
(10) Verify system operation.
(11) Install quarter trim panel.
(12) Install rear seat cushion and rear seat back making sure these components do not cause hydraulic line pinches and/or kinks.

HYDRAULIC LINES

REMOVAL

(1) Move top to the down position
(2) Disconnect battery negative terminal.
(3) Remove rear seat cushion and rear seat back.
(4) Remove both quarter trim panels.
(5) Disconnect pump wire connector.
(6) Remove motor from floor panel. Holding motor/pump assembly with reservoir up, squeeze fill plug to release any air pressure from system.
(7) Disconnect hydraulic line from hydraulic cylinders.
(8) Disconnect hydraulic line from hydraulic pump.
(9) Remove hydraulic line from vehicle. Carefully drain hydraulic line and properly dispose of fluid and component.

INSTALLATION

(1) Position hydraulic line to vehicle.
(2) Connect hydraulic line to hydraulic pump. Tighten fittings to 11 to 12 N·m (98 to 106 in. lbs.) torque.
(3) Connect hydraulic line to hydraulic cylinders. Tighten fittings to 8.5 to 9.5 N·m (75 to 84 in. lbs.) torque.
(4) Connect battery negative terminal.
(5) Bleed system (Refer to 23 - BODY/CONVERTIBLE TOP - ADJUSTMENTS - HYDRAULIC MOTOR/PUMP BLEEDING PROCEDURES).
(6) Verify system operation.
(7) Install quarter trim panels.
(8) Install rear seat cushion and rear seat back. Ensure the rear seat back will not pinch and/or kinks the hydraulic lines.

HYDRAULIC MOTOR/PUMP ASSEMBLY

REMOVAL

(1) Move top to the down position
(2) Disconnect battery negative terminal.
(3) Remove rear seat cushion and rear seat back.
(4) Disconnect pump wire connector connection (Fig. 6).
(5) Remove motor from floor panel. Holding motor assembly with reservoir up, squeeze fill plug to release any air pressure from system.
(6) Mark connections and disconnect hydraulic lines from pump.
(7) Remove motor pump assembly from vehicle.

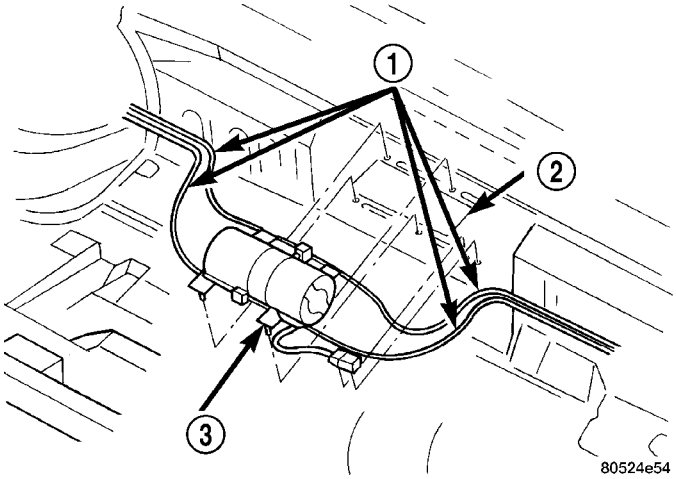

Fig. 6 HYDRAULIC PUMP ASSEMBLY

1 - HYDRAULIC LINES
2 - MOUNTING BRACKET
3 - HYDRAULIC PUMP ASSEMBLY

INSTALLATION

(1) Position hydraulic motor in vehicle.
(2) Connect hydraulic lines to pump. Tighten fittings to 11 to 12 N·m (98 to 106 in. lbs.) torque.
(3) Connect pump wire connector.
(4) Connect battery negative terminal.
(5) Bleed the motor/pump and fill and verify operation of hydraulic pump (Refer to 23 - BODY/CONVERTIBLE TOP - ADJUSTMENTS - HYDRAULIC MOTOR/PUMP BLEEDING PROCEDURES).
(6) Press hydraulic motor into mounts.
(7) Install rear seat cushion and rear seat back. Ensure the rear seat back will not pinch and/or kinks the hydraulic lines.

CONVERTIBLE TOP REAR WINDOW

REMOVAL

(1) Release folding top latches and allow top cover to relax.
(2) Lift shower curtain and remove push in nuts holding curtain to the studs.

CAUTION: Take precautions not to tear curtain on the boot shelf during removal.

(3) Disengage the headliner at the rear sail panels.
(4) Disconnect wire connectors from terminals on heated rear window.
(5) Pull wire harness from sleeves at each side of the rear window.
(6) Remove nuts attaching belt line tack strips to vehicle.

NOTE: Support top 12 inches above windshield header.

(7) Remove the five piece belt line tack strips.
(8) Disengage elastic strap from the third roof bow, if equipped.
(9) Remove antenna mast.
(10) Place protective padding over the entire rear deck area to protect paint. Move tack strips to top of deck opening onto protective padding.
(11) Mark the outer sail panels along the top edges and down the seams between the outer and second tack strips from the outside of top (Fig. 7).

NOTE: Reference marks will be used to reinstall the new rear window assembly.

(12) Remove sail panel springs on both sides at the front corners of the cover assembly (Fig. 8).
(13) Remove all staples from the cover assembly.

CAUTION: Be careful not to tear or damage the cover assembly.

(14) Fold the cover assembly up over the top.
(15) Remove tape and foam at the end of the third roof bow, save if reusable.
(16) Remove the rearmost stop screw on the number three bow, either driver's or passenger's side (Fig. 9).
(17) Slide the old rear window assembly off the number three bow.

CONVERTIBLE TOP REAR WINDOW (Continued)

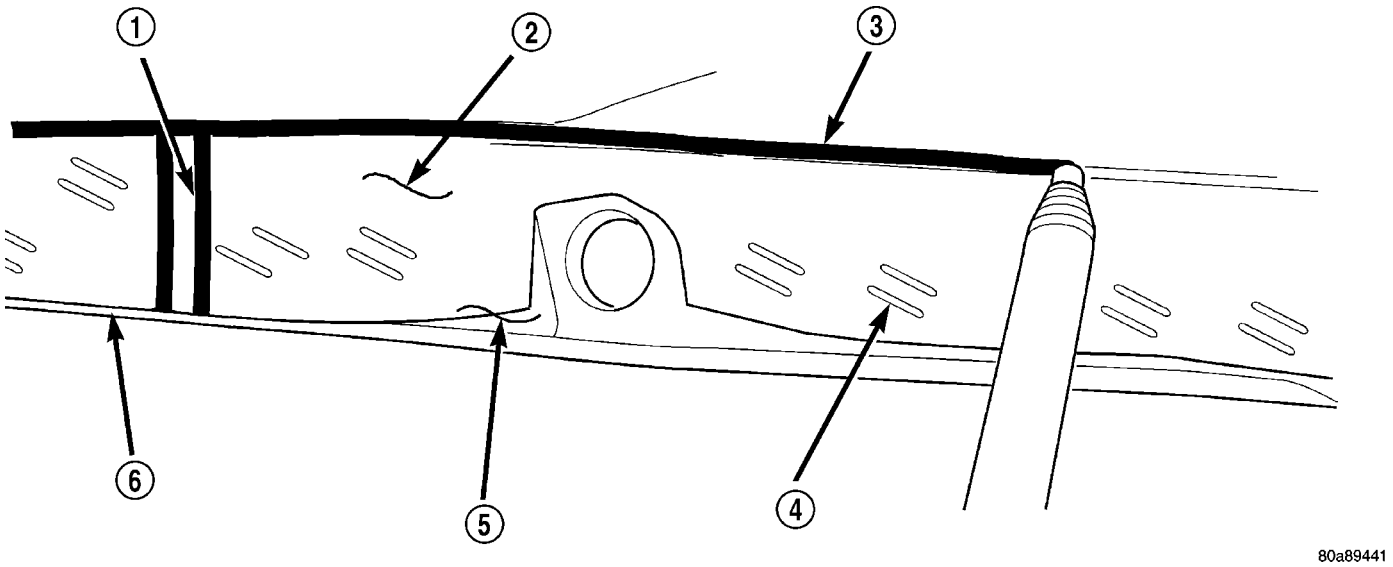

Fig. 7 SAIL PANEL REFERENCE MARKS

1 - SEAM REFERENCE MARK
2 - COVER ASSEMBLY
3 - REFERENCE MARK
4 - STAPLES
5 - OUTER TACK STRIP
6 - SECOND TACK STRIP

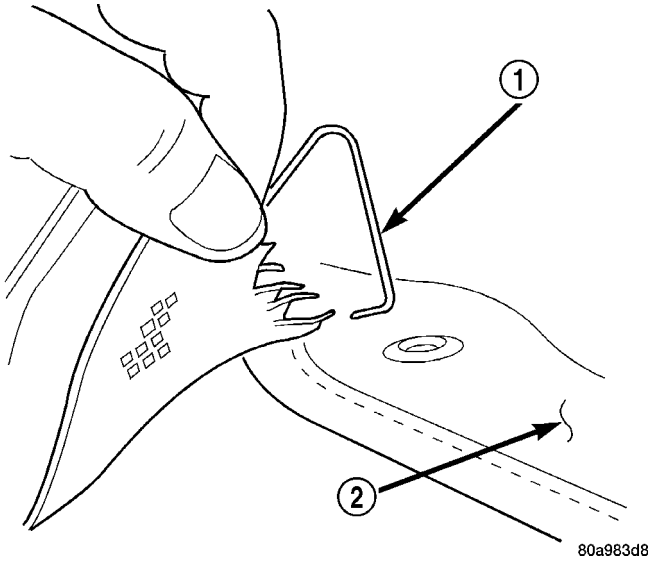

Fig. 8 SAIL SPRINGS

1 - SAIL SPRING
2 - COVER ASSEMBLY

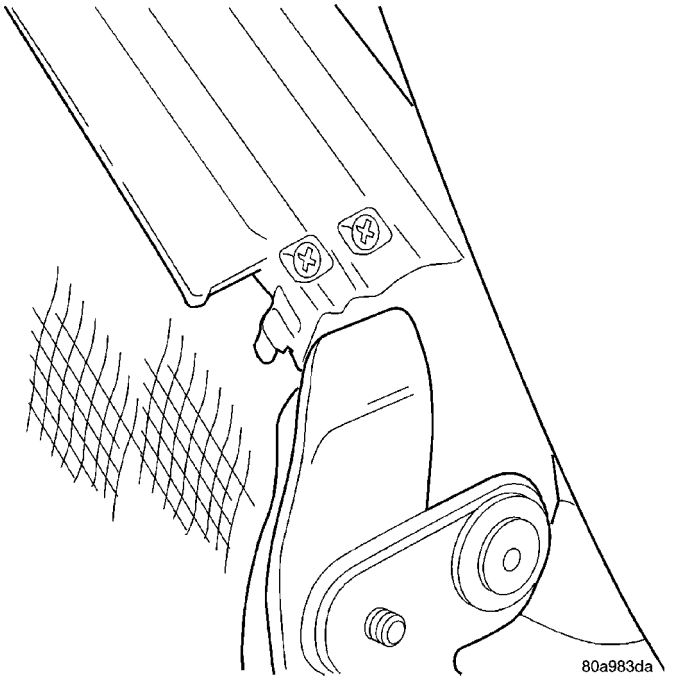

Fig. 9 REAR WINDOW REAR STOP SCREW

INSTALLATION

NOTE: To support the new Rear Window assembly for stapling purposes, remove the new rear window from packaging and place shipping box across the top opening, resting on the back seat and decklid.

(1) Remove the boot shelf and two sail springs from the old rear window assembly and install onto the new rear window assembly.

(2) Place rear window locking strip on third bow.

(3) Insert the locking strip into the channel of the number three roof bow. A rubber mallet may be required to set locking strip into channel (Fig. 10).

CAUTION: Do not slide or pull the locking strip onto the number three bow.

CONVERTIBLE TOP REAR WINDOW (Continued)

NOTE: To ensure rear window is snapped into number three bow, flip assembly onto top to inspect snap in feature.

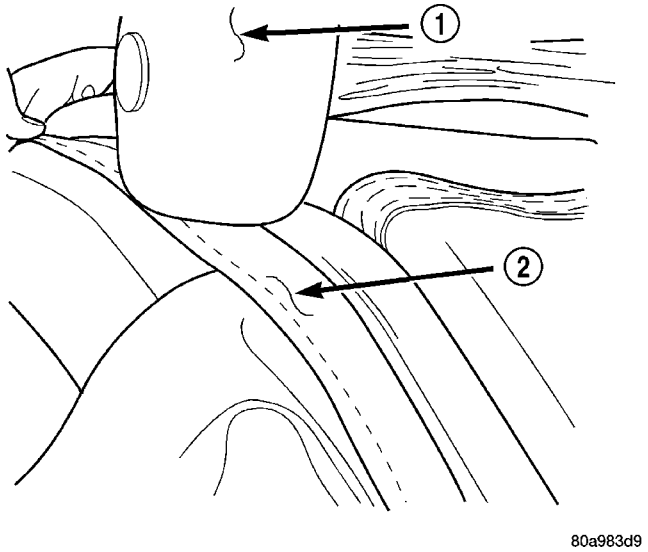

Fig. 10 REAR WINDOW LOCKING STRIP

1 - RUBBER MALLET
2 - LOCKING STRIP

(4) Install existing or new foam on the end of the bow using 1 in. black tape to secure foam to bow.

(5) Install the rearmost stop screw on the number three bow.

(6) Starting from the right side of the vehicle, locate the front edge of the cover assembly to the tacking strip (use measurements located in the Remove procedures(Refer to 23 - BODY/CONVERTIBLE TOP/REAR WINDOW - REMOVAL) and pull cover down until marking is one eighth of an inch below the top edge of the tacking strips.

NOTE: 1/8 inch measurement should be constant when stapling the cover assembly to prevent wrinkles.

(7) Continue to staple right hand cover assembly to tacking strips. Work from the outboard to center line of the vehicle.

(8) Repeat Step 6 for left side of the vehicle.

(9) Install sail panel springs to front of cover assembly.

(10) Install antenna mast.

(11) Engage rear window elastic strap to number three roof bow.

(12) Using the nuts, install the belt line tacking strips, starting with the center tack strip and working outboard.

(13) Feed rear window defogger wire harness through the sleeves at each side of the rear window.

(14) Connect rear window defogger wire connectors to terminals.

(15) Engage the headliner at the rear sail panel.

(16) Install shower curtain with push on nuts.

CAUTION: Make sure top well is not trapped under the tack strips.

(17) Latch top and inspect for wrinkles.

CONVERTIBLE TOP STORAGE

REMOVAL

(1) Raise and secure convertible top.

(2) Remove screws attaching headliner to top well.

(3) Remove push in fasteners attaching convertible top storage section to rear of storage area (Fig. 11).

(4) Remove push in fasteners attaching storage area below seat belt bezel.

(5) Pull rear of storage area upward and disengage front of storage area from beauty bar.

(6) Remove storage area from vehicle.

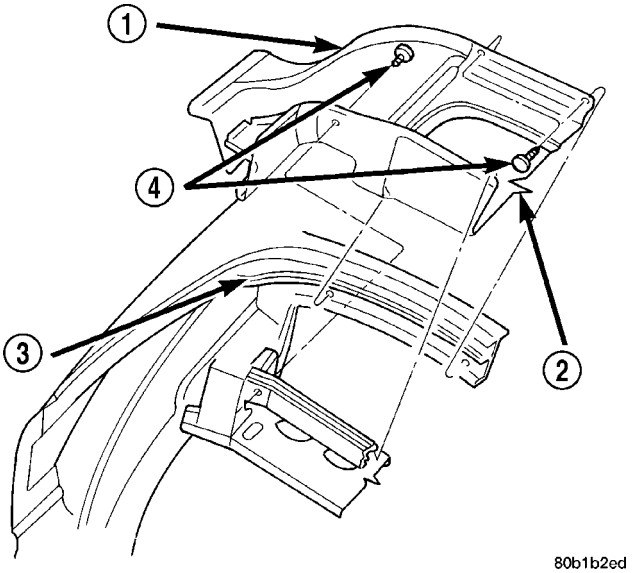

Fig. 11 CENTER CONVERTIBLE TOP STORAGE

1 - CONVERTIBLE TOP STORAGE
2 - REAR DECK PANEL
3 - TACK STRIP
4 - PUSH-IN FASTENER

INSTALLATION

(1) Position convertible top storage area in vehicle.

(2) Engage front of storage area under beauty bar and push rear of storage area downward into position.

(3) Install push in fasteners attaching convertible top storage section to rear of storage area.

(4) Install push in fasteners to attach storage areas below seat belt bezel.

(5) Install screws attaching headliner to top well.

DECKLID/HATCH/LIFTGATE/TAILGATE

TABLE OF CONTENTS

	page
DECKLID	
REMOVAL	23
INSTALLATION	23
GAS PROP	
REMOVAL	24
INSTALLATION	24
HINGE	
REMOVAL	24
INSTALLATION	24
DECKLID LATCH	
REMOVAL	24
INSTALLATION	25
DECKLID LATCH STRIKER	
REMOVAL	25
INSTALLATION	25
DECKLID LOCK CYLINDER	
REMOVAL	25
INSTALLATION	25
EMERGENCY RELEASE CABLE	
REMOVAL	26
INSTALLATION	26

DECKLID

REMOVAL

(1) Release decklid latch and open decklid.

(2) Mark outline of hinge on decklid to aid in installation (Fig. 1).

(3) Disconnect all wire connectors from decklid latch and disconnect wire harness from decklid.

(4) Place suitable padding between decklid and deck panel to protect paint finish.

(5) With aid of a helper, remove bolts attaching decklid to decklid hinge.

(6) Remove decklid from vehicle.

INSTALLATION

(1) Position decklid on vehicle.

(2) With aid of a helper, loosely install bolts attaching decklid to decklid hinge.

(3) Align marks made on decklid previously to decklid hinge.

(4) Tighten bolts attaching decklid to decklid hinge to 22.5 N·m (200 in. lbs.) torque.

(5) Connect all wire connectors to decklid latch and install wire harness to decklid.

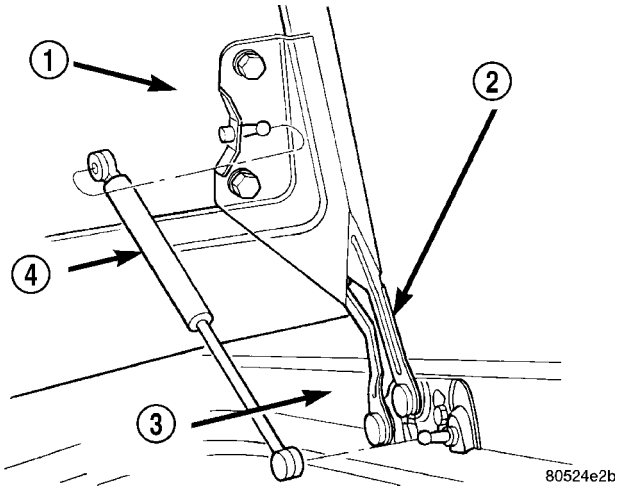

Fig. 1 Decklid Hinge And Gas Support Cylinder

1 - TRUNK LID
2 - TRUNK HINGE
3 - QUARTER PANEL TROUGH
4 - GAS SUPPORT CYLINDER

(6) Verify fit of decklid to deck panel. Adjust as necessary.

GAS PROP

REMOVAL

(1) Open decklid.
(2) Remove the gas prop-rod lock caps (Fig. 2).
(3) Remove prop-rod from mounting studs.

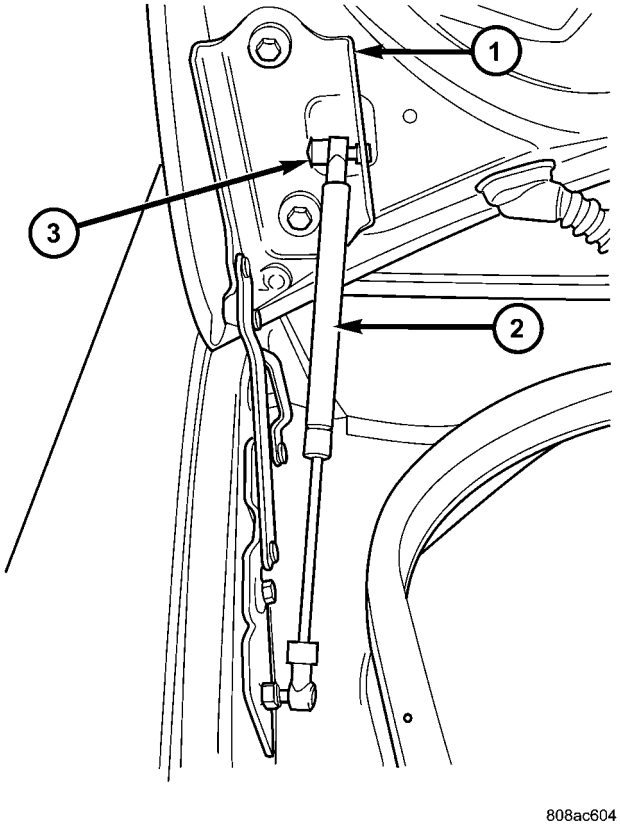

Fig. 2 Gas Prop-Rod Lock Cap

1 - DECKLID HINGE
2 - GAS PROP
3 - GAS PROP-ROD LOCK CAP

INSTALLATION

(1) Install prop-rod to mounting studs.
(2) Install the gas prop-rod lock caps.
(3) Close decklid.

HINGE

REMOVAL

(1) Open decklid.
(2) Mark outline of hinge on quarter panel trough and inside of decklid to aid installation.
(3) Place a padded block between the deck panel and the decklid.
(4) Remove the gas prop-rod lock caps (Fig. 2).
(5) Remove prop-rod from mounting studs.
(6) Remove bolts attaching hinge to decklid.
(7) Place decklid against padded block and hold it steady.
(8) Remove bolts attaching hinge to quarter panel trough.
(9) Remove hinge from vehicle.

INSTALLATION

(1) Place hinge in the mark outline of hinge on quarter panel trough and inside of decklid to aid in positioning hinge.
(2) Install hinge to vehicle.
(3) Install bolts attaching hinge to quarter panel trough.
(4) Tighten bolts to 22.5 N·m (200 in. lbs.) torque.
(5) Place decklid against padded block and hold it steady.
(6) Install bolts attaching hinge to decklid.
(7) Tighten bolts to 22.5 N·m (200 in. lbs.) torque.
(8) Install prop-rod to mounting studs.
(9) Install the gas prop-rod lock caps.
(10) Remove the padded block between the deck panel and the decklid.
(11) Close decklid.

DECKLID LATCH

REMOVAL

(1) Release decklid latch and open decklid.
(2) Mark outline of decklid latch on decklid to aid in installation.
(3) Disconnect wire connectors to remote release solenoid, if so equipped (Fig. 3).
(4) Remove bolts attaching decklid latch to decklid.
(5) Remove decklid latch from vehicle.

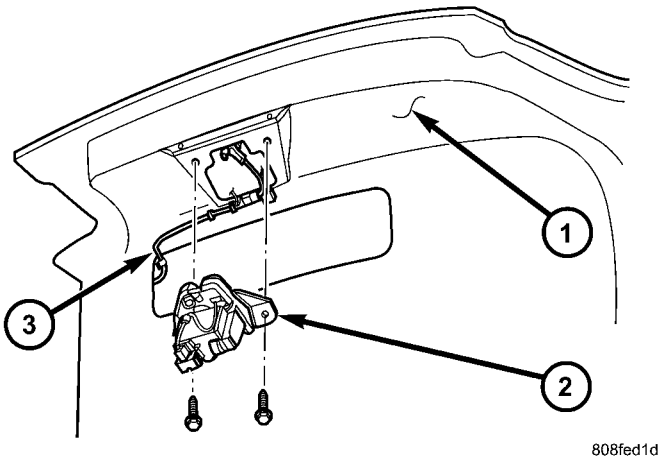

Fig. 3 DECKLID LATCH

1 - DECKLID
2 - DECKLID LATCH
3 - WIRE HARNESS

DECKLID LATCH (Continued)

INSTALLATION

(1) Position decklid latch on vehicle.
(2) Loosely install bolts attaching decklid latch to decklid.
(3) Tighten bolts to 12 N·m (106 in. lbs.) torque.
(4) Align decklid latch to marks made previously on decklid and tighten bolts.
(5) Connect wire connectors to remote release solenoid, if so equipped.
(6) Verify fit of decklid to deck panel and decklid latch operation. Adjust as necessary.

DECKLID LATCH STRIKER

REMOVAL

(1) Release decklid latch and open decklid.
(2) Mark outline of decklid latch striker on rear closure panel to aid in installation.
(3) Remove bolts attaching decklid latch striker to rear closure panel (Fig. 4).
(4) Remove striker from vehicle.

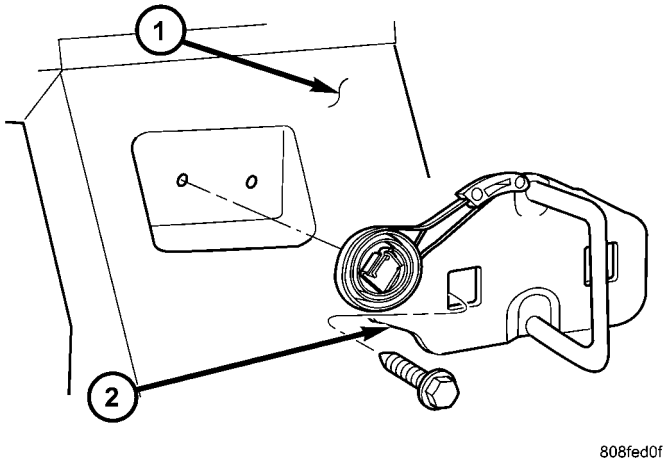

Fig. 4 DECKLID LATCH STRIKER

1 - REAR CLOSURE PANEL
2 - TRUNK LATCH STRIKER

INSTALLATION

(1) Position striker in vehicle.
(2) Loosely install bolts attaching decklid latch striker to rear closure panel.
(3) Align decklid latch striker to marks made previously on rear closure panel.
(4) Tighten bolts to 12 N·m (106 in. lbs.) torque.
(5) Verify fit of decklid to deck panel and operation of decklid latch. Adjust as necessary.

DECKLID LOCK CYLINDER

REMOVAL

(1) Release decklid latch and open decklid.
(2) Remove decklid latch.
(3) Remove clip attaching decklid lock cylinder to security alarm switch, if so equipped (Fig. 5).
(4) Remove security alarm switch, if so equipped.
(5) Remove clip attaching decklid lock cylinder to decklid.
(6) Remove decklid lock cylinder from vehicle.

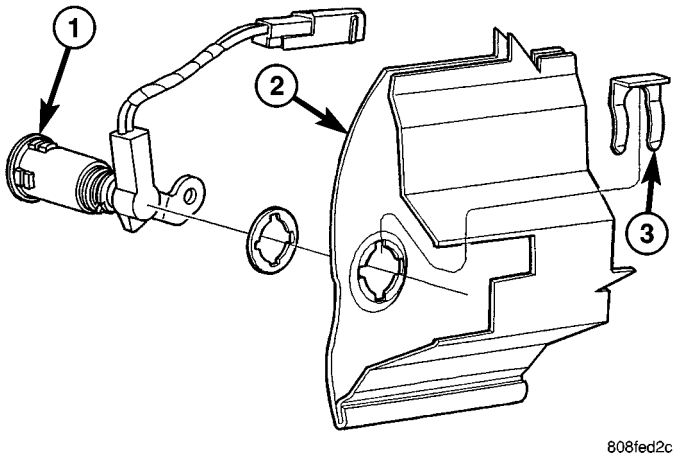

Fig. 5 DECKLID LOCK CYLINDER

1 - DECKLID LOCK CYLINDER
2 - DECKLID
3 - RETAINER CLIP

INSTALLATION

(1) Position decklid lock cylinder on vehicle.
(2) Install clip holding decklid lock cylinder to decklid.
(3) Install security alarm switch, if so equipped.
(4) Install clip attaching decklid lock cylinder to security alarm switch, if so equipped.
(5) Install decklid latch.

EMERGENCY RELEASE CABLE

REMOVAL

(1) Remove the decklid latch cover (Fig. 6).

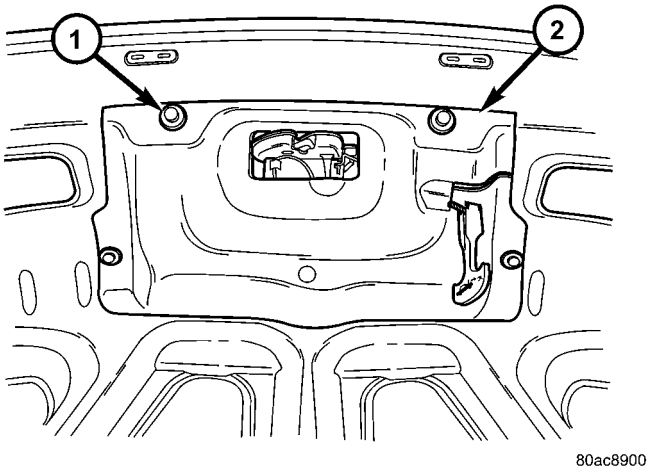

Fig. 6 DECKLID LATCH COVER

1 - Push pin
2 - Decklid latch cover

(2) Unclip cable and handle assembly (Fig. 7).

INSTALLATION

(1) Clip emergency release cable onto the latch.

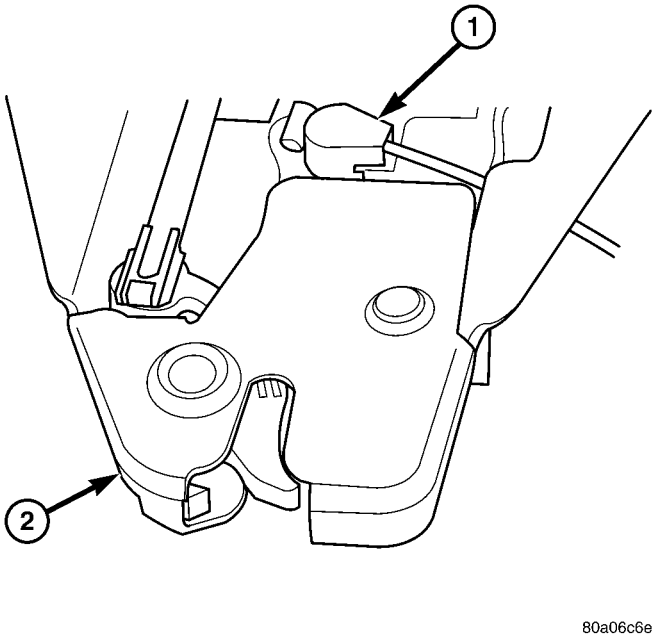

Fig. 7 EMERGENCY RELEASE CABLE

1 - Release Cable Clip
2 - Decklid Latch

(2) Install the decklid latch cover.

DOOR - FRONT

TABLE OF CONTENTS

page

CHECK STRAP
REMOVAL 28
INSTALLATION 28
DOOR
REMOVAL 28
INSTALLATION 28
DOOR GLASS
REMOVAL
REMOVAL 29
REMOVAL - JR-27 ONLY 29
INSTALLATION
INSTALLATION 29
INSTALLATION - JR-27 ONLY 29
ADJUSTMENTS
ADJUSTMENT - JR-27 ONLY 29
DOOR GLASS INNER BELT STABILIZER
REMOVAL 34
INSTALLATION 34
EXTERIOR HANDLE
REMOVAL 34
INSTALLATION 34
HINGE
REMOVAL 35
INSTALLATION 35
LATCH
REMOVAL 35
INSTALLATION 35
ADJUSTMENTS
ADJUSTMENT 36
LATCH STRIKER
REMOVAL 37
INSTALLATION 37
LOCK BUTTON BELL CRANK
REMOVAL 37
INSTALLATION 37
LOCK CYLINDER
DESCRIPTION 38
REMOVAL 38
INSTALLATION 38
SIDE VIEW MIRROR FLAG/DOOR GLASS CHANNEL
REMOVAL 38
INSTALLATION 38
TRIM PANEL
REMOVAL 39
INSTALLATION 39
REAR VERTICAL GUIDE BAR
REMOVAL - JR-27 40
INSTALLATION - JR-27 40
WINDOW REGULATOR
REMOVAL
REMOVAL 41
REMOVAL- JR-27 ONLY 41
INSTALLATION
INSTALLATION 42
INSTALLATION - JR-27 ONLY 42
APPLIQUE
REMOVAL 42
INSTALLATION 42
DOOR PIN ASSEMBLY
REMOVAL 43
INSTALLATION 43
ADJUSTMENTS
ADJUSTMENT 43
WATERSHIELD
REMOVAL 44
INSTALLATION 44

CHECK STRAP

REMOVAL

(1) Remove door trim panel (Refer to 23 - BODY/DOOR - FRONT/TRIM PANEL - REMOVAL).

(2) Remove water dam as necessary to gain access (Refer to 23 - BODY/DOOR - FRONT/WATERDAM - REMOVAL).

(3) Remove bolts attaching check strap to lower A–pillar.

(4) Remove bolts attaching check strap to door end frame (Fig. 1).

(5) Remove door check strap from vehicle.

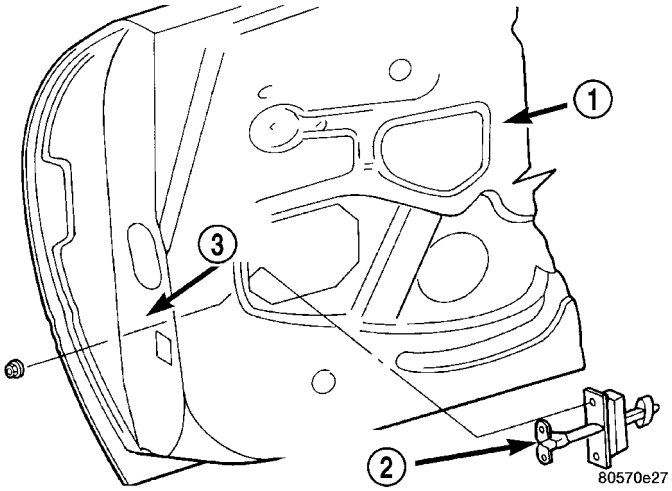

Fig. 1 Front Door Check Strap

1 - FRONT DOOR
2 - DOOR CHECK STRAP
3 - DOOR FACE

INSTALLATION

(1) Position door check strap on vehicle (Fig. 1).

(2) Install bolts attaching check strap to door end frame.

(3) Install bolts attaching check strap to lower A-pillar.

(4) Install water dam (Refer to 23 - BODY/DOOR - FRONT/WATERDAM - INSTALLATION).

(5) Install door trim panel (Refer to 23 - BODY/DOOR - FRONT/TRIM PANEL - INSTALLATION).

DOOR

REMOVAL

(1) Open and support door on a suitable lifting device.

(2) Mark all bolt and hinge attachment locations with a grease pencil or other suitable device to aid installation.

(3) Disengage wire connector at hinge pillar.

(4) Remove bolts attaching door check strap to hinge pillar (Fig. 2).

(5) Remove the nuts attaching the door to the door hinges and remove the door from the vehicle.

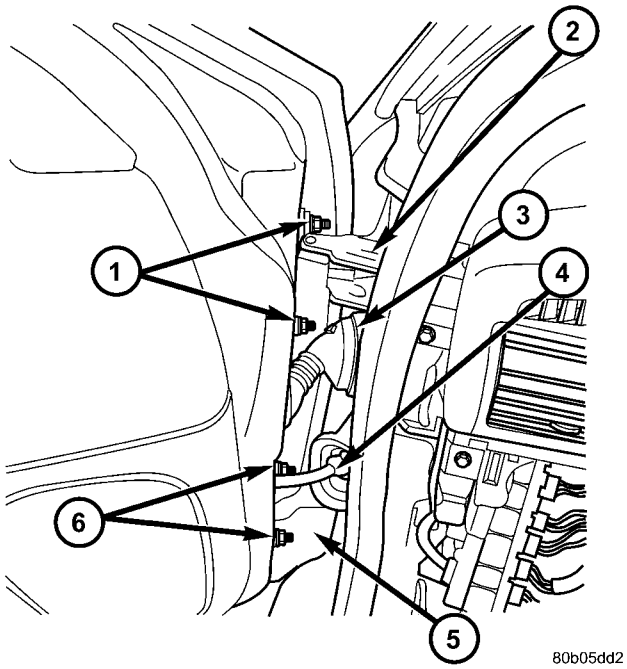

Fig. 2 FRONT DOOR HINGES

1 - UPPER DOOR HINGE NUTS
2 - UPPER DOOR HINGE
3 - ELECTRICAL CONNECTIONS
4 - CHECK STRAP
5 - LOWER HINGE
6 - LOWER HINGE NUTS

INSTALLATION

(1) Position door onto the door hinges and install the nuts.

(2) Install bolts attaching door check strap to hinge pillar.

(3) Connect wire connector at hinge pillar.

(4) Verify door fit and operation. Adjust the door for flushness and parallel gaps as necessary.

DOOR GLASS

REMOVAL

REMOVAL

(1) Remove door trim panel and inner belt weatherstrip.

(2) Connect power window switch and lower window to approximately mid position. The lift plate nuts will align with holes in the inner door panel.

(3) Loosen screws attaching regulator roller channel to glass.

(4) Slide roller channel rearward to allow screw heads to pass through key hole slots in channel.

(5) Remove glass from roller channel.

(6) Raise glass upward and out of the opening at top of door (Fig. 3).

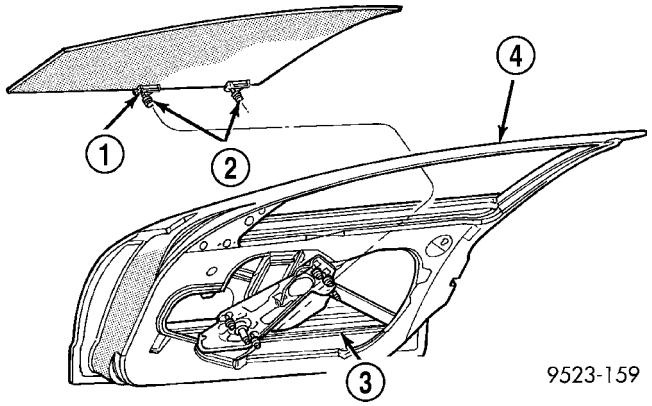

Fig. 3 Front Door Glass

1 - DOOR GLASS
2 - SCREWS
3 - ROLLER CHANNEL
4 - FRONT DOOR

REMOVAL - JR-27 ONLY

(1) Remove door trim panel and watershield.

(2) Remove inner door belt weatherstrip.

(3) Loosen inner belt stabilizer (Fig. 4).

(4) Remove door speaker, if so equipped.

(5) Lower door glass to access glass attachment bolts approximately six inches from bottom of travel.

(6) Remove bolts attaching regulator lift channel to door glass (Fig. 5).

(7) Remove bolts attaching rear guide plate to door glass (Fig. 6).

(8) Remove rear guide plate from door glass.

(9) Lift door glass upward and out of opening at top of door (Fig. 5).

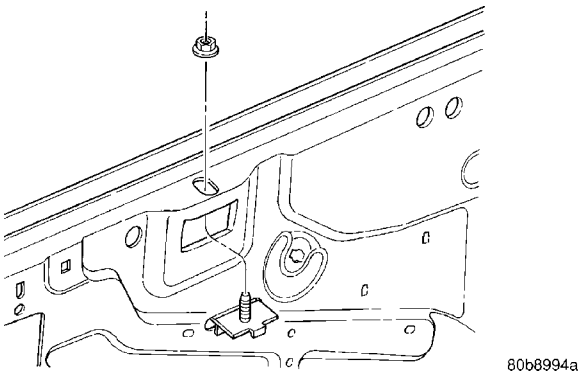

Fig. 4 INNER BELT STABILIZER

INSTALLATION

INSTALLATION

(1) Lower glass down and in the opening at top of door.

(2) Position glass on roller channel.

(3) Slide roller channel forward to allow screw heads to engage key hole slots in channel.

(4) Tighten screws attaching regulator roller channel to glass.

(5) Install door trim panel and inner belt weatherstrip.

INSTALLATION - JR-27 ONLY

(1) Carefully lower door glass through opening in top of door. Verify that the front edge of the glass is in the mirror flag glass channel.

(2) Position rear guide plate onto door glass and install bolts.

(3) Install nuts attaching regulator lift channel to door glass.

(4) Tighten all door glass fasteners to 8 N·m (73 in. lbs.).

(5) Install door speaker, if so equipped. (Refer to 8 - ELECTRICAL/AUDIO/SPEAKER - INSTALLATION)

(6) Tighten window inner belt stabilizer.

(7) Install inner door belt weatherstrip. (Refer to 23 - BODY/WEATHERSTRIP/SEALS/FRONT DOOR INNER BELT WEATHERSTRIP - INSTALLATION)

(8) Install the watershield. (Refer to 23 - BODY/DOOR - FRONT/WATERSHIELD - INSTALLATION)

ADJUSTMENTS

ADJUSTMENT - JR-27 ONLY

NOTE: Verify that the door is properly adjusted to the body prior to adjusting the door glass.

DOOR GLASS (Continued)

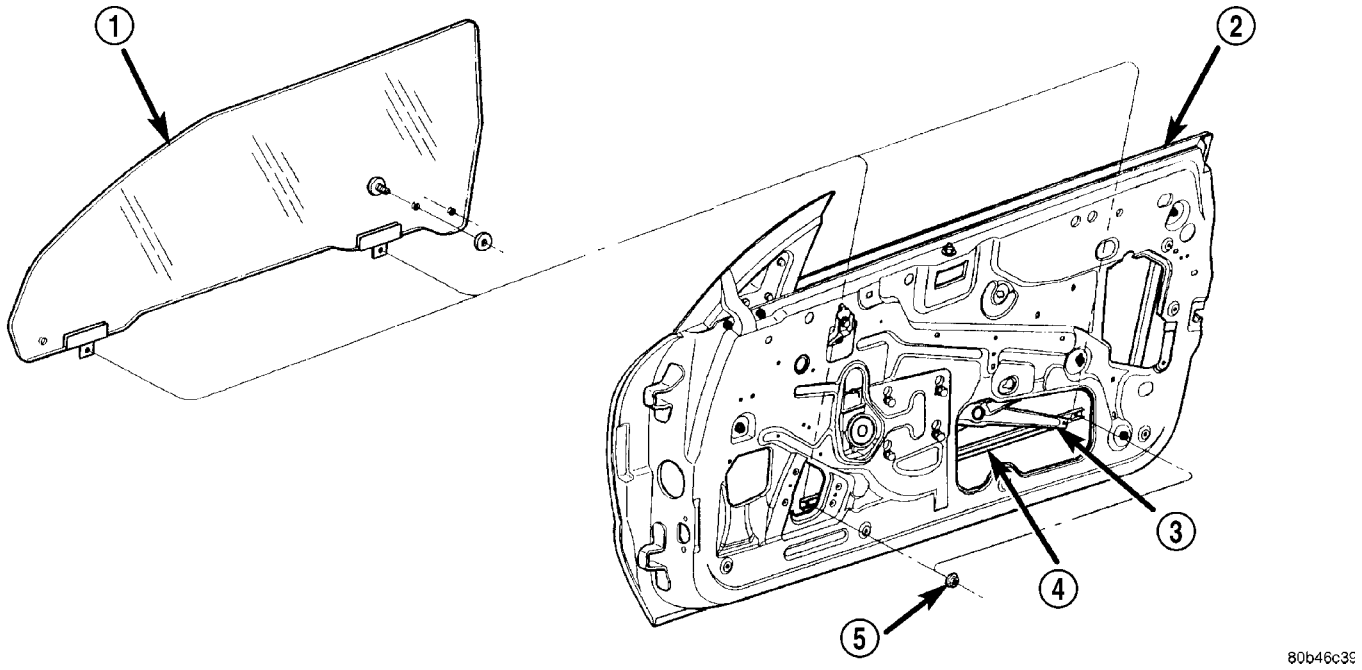

Fig. 5 REGULATOR LIFT CHANNEL

1 - DOOR GLASS
2 - DOOR
3 - WINDOW REGULATOR
4 - LIFT CHANNEL
5 - ROLLER CHANNEL NUT

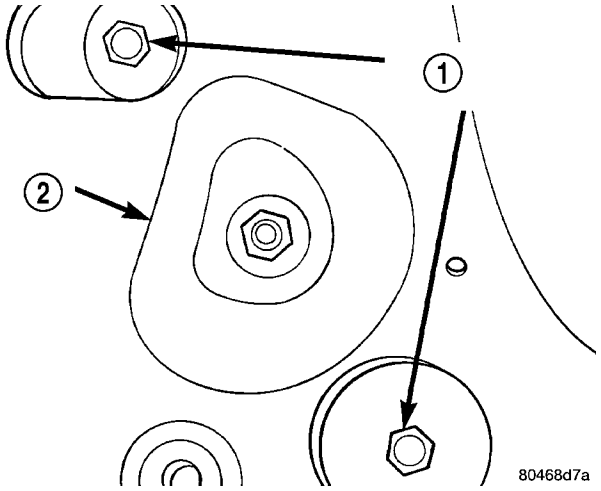

Fig. 6 REAR GUIDE BOLTS

1 - REAR GUIDE BOLTS
2 - INNER DOOR PANEL

NOTE: Lower quarter glass to the full down position while making door glass adjustments, unless otherwise instructed.

TOP OF GLASS – INBOARD/OUTBOARD ADJUSTMENTS

(1) Remove the access covers. (Fig. 7) and (Fig. 8)

(2) Remove the convertible top side rail weatherstrip from the location to be adjusted.

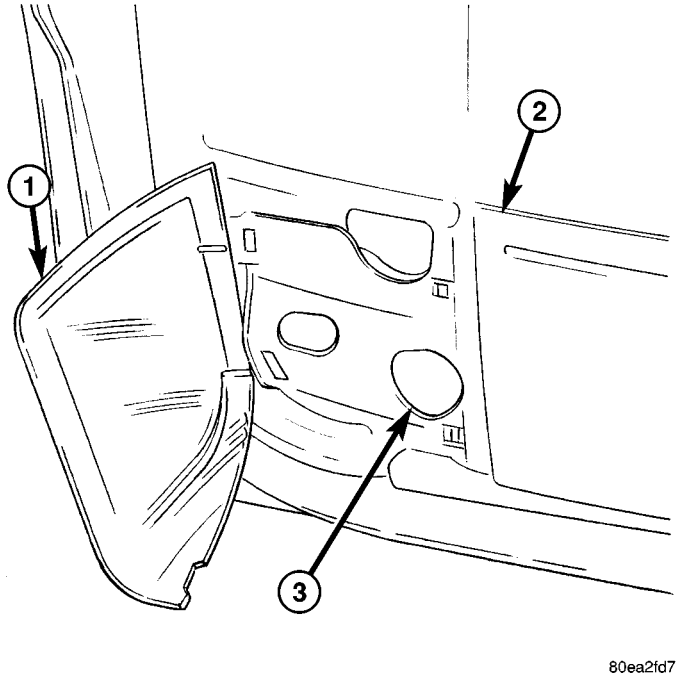

Fig. 7 UP-STOP ACCESS HOLE

1 - REFLECTOR
2 - TRIM PANEL
3 - JACK SCREW ACCESS HOLE

NOTE: Remove only one weatherstrip section at a time or the glass to weatherstrip retainer measurements will not be accurate.

DOOR GLASS (Continued)

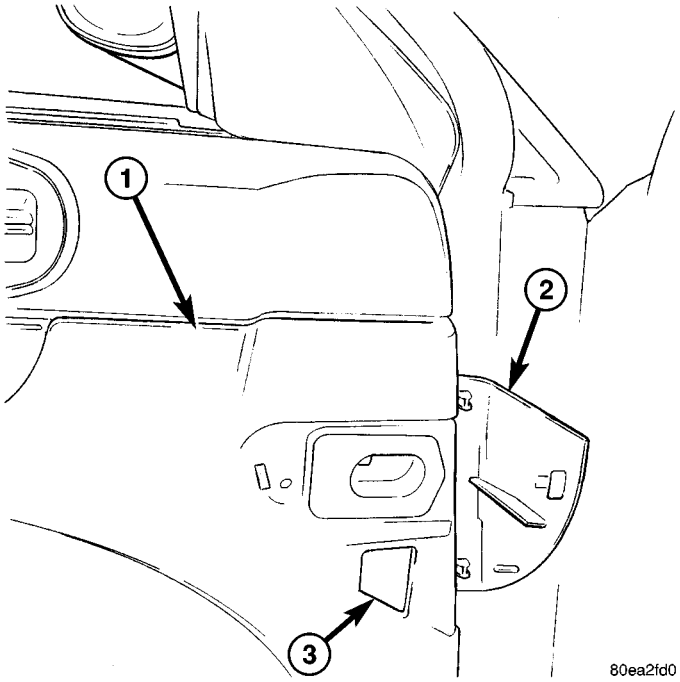

Fig. 8 JACK SCREW ACCESS HOLE

1 - TRIM PANEL
2 - ACCESS COVER
3 - JACK SCREW ACCESS HOLE

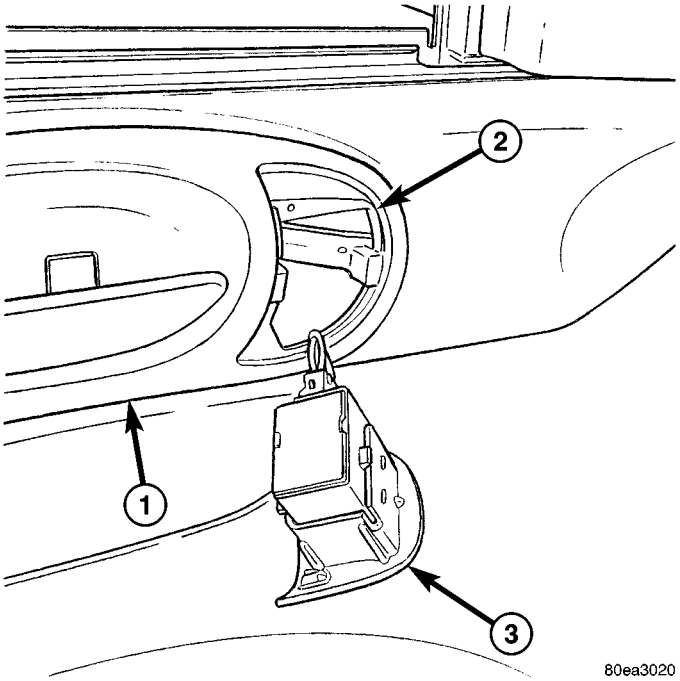

Fig. 9 REFLECTOR PLATE

1 - INSIDE HANDLE ACTUATOR
2 - JACK SCREW ACCESS HOLE
3 - REFLECTOR/LIGHT

(3) Using a suitable wrench, loosen the jack screw nuts. (Fig. 7) and (Fig. 8)

(4) Using a suitable allen wrench, rotate the jack screw to achieve the proper gap between the door glass and the weatherstrip retainer (Fig. 14). Tighten all fasteners prior to measuring the gaps.

(5) Install the weatherstrip. Cycle the glass fully down and up, open and close the door. Verify that the top edge of the door glass is beneath the lip of the weatherstrip.

UP-STOP ADJUSTMENTS

NOTE: For minor adjustments (up to 3mm), rear up stop can be accessed without removing the door trim panel. Remove the reflector plate (Fig. 9). The jackscrew nut also acts as a minor adjustment up stop. Loosen the nut and move up or down to achieve the correct height. Do not adjust the jack-screw, as this will affect the inboard/outboard adjustments.

(1) Remove door trim panel. (Refer to 23 - BODY/ DOOR - FRONT/TRIM PANEL - REMOVAL)

(2) Remove watershield as necessary to gain access to the rear adjuster. Lifting up the flap in the water-shield can access the front adjuster. (Fig. 10)

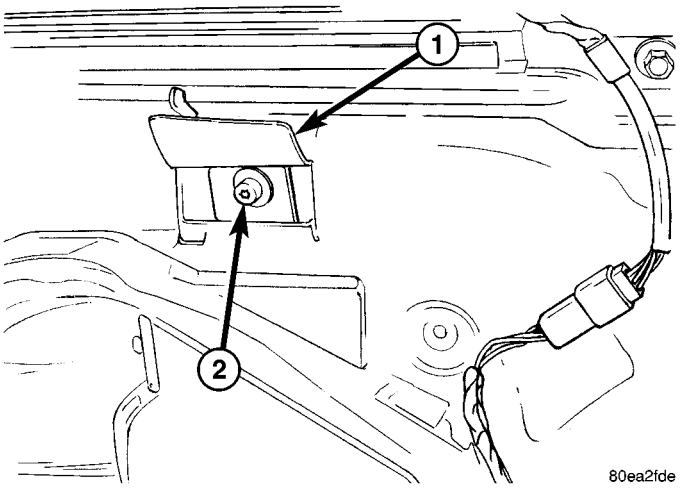

Fig. 10 FRONT ADJUSTER

1 - WATERSHIELD FLAP
2 - JACK SCREW

DOOR GLASS (Continued)

(3) Loosen up stop fasteners. (Fig. 11) and (Fig. 12).

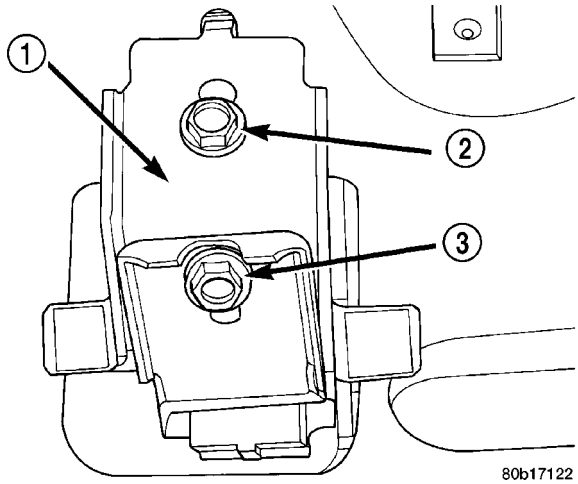

Fig. 11 FORWARD UP STOP ADJUSTMENT

1 - FORWARD UPSTOP
2 - ADJUSTMENT BOLT
3 - CONTACT BOLT

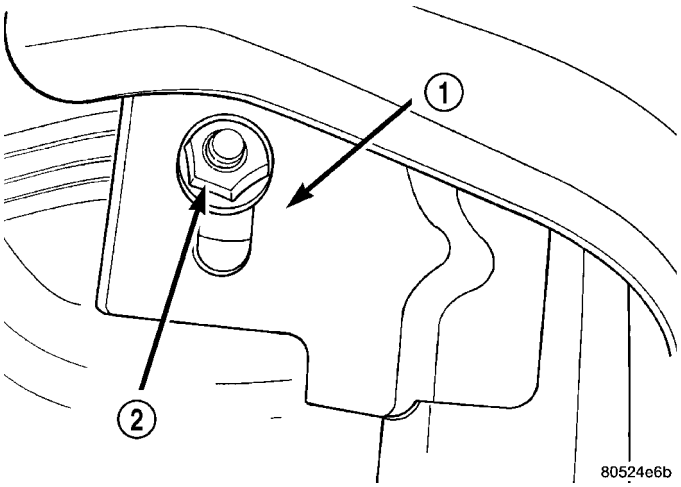

Fig. 12 REAR UP STOP ADJUSTMENT

1 - REAR UPSTOP
2 - UPSTOP ADJUSTMENT NUT

(4) Remove the convertible top side rail weatherstrip from location to be adjusted.

NOTE: Remove only one weatherstrip section at a time or the glass to weatherstrip retainer measurements will not be accurate.

(5) Close door and raise door glass.

(6) Adjust the up stop to achieve the proper glass to weatherstrip retainer gap. (Fig. 14)

(7) Tighten all fasteners and install the weatherstrip.

(8) Cycle the glass fully down and up, open and close the door. Verify that the top edge of the door glass is beneath the lip of the weatherstrip.

NOTE: Verify that the forward edge of the glass is flush with the mirror flag edge. Adjust the mirror flag as necessary to achieve a flush condition. (Fig. 13)

(9) Verify that the forward up stop fully contacts hook on glass. Adjust contact bolt on the forward up stop as necessary.

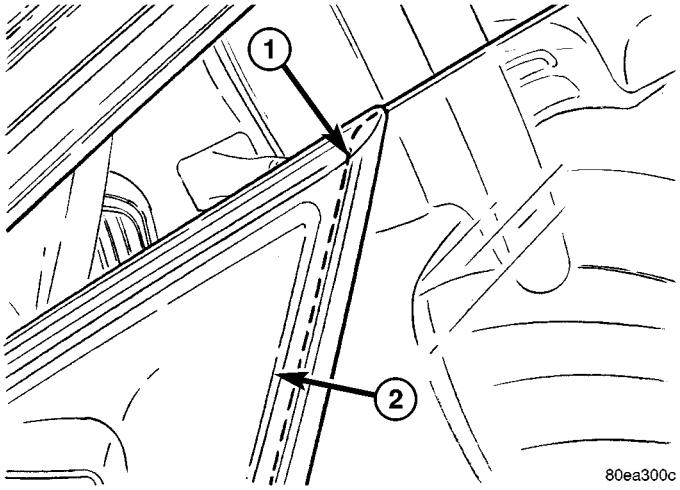

Fig. 13 MIRROR FLAG

1 - GLASS EDGE
2 - MIRROR FLAG

GLASS – FRONT/REAR ADJUSTMENT

(1) Remove the watershield. (Refer to 23 - BODY/DOOR - FRONT/WATERSHIELD - REMOVAL)

(2) Lower door glass to gain access to glass attachments.

(3) Loosen three glass attachment bolts.

(4) Raise door glass and position correctly (Fig. 15).

(5) Tighten the two accessible glass fasteners in the full up position.

(6) Lower door glass and tighten the remaining glass fastener.

(7) Raise glass to top of travel and verify positioning. (Fig. 15).

(8) To verify proper fit of the door glass to the header/a-pillar weatherstrip,

(a) Lower door glass slightly.

(b) Place a paper strip between the glass and weatherstrip near mirror flag and another near the front upper corner of the door glass.

(c) Raise glass to full up position.

(d) Pull the strip from between the door glass and the weatherstrip. There should be slight tension on the paper.

DOOR GLASS (Continued)

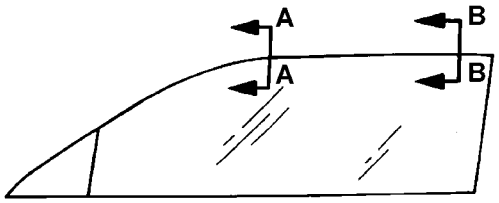

			MEASUREMENT LOCATIONS AND THEIR VALUES			
			SECTION A-A		SECTION B-B	
			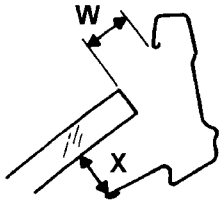		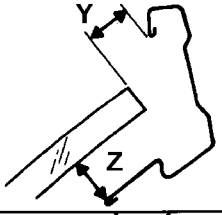	
SEQUENCE		ADJUSTMENT	W	X	Y	Z
1	IN/OUT	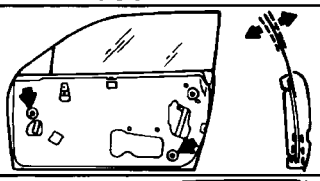		20.0mm ±2mm		20.0mm ±2mm
2	FORWARD/ REARWARD	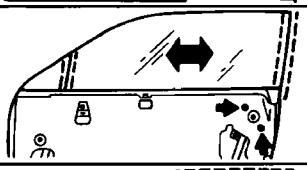	10.0mm ±2mm		10.0mm ±2mm	
	UP/DOWN	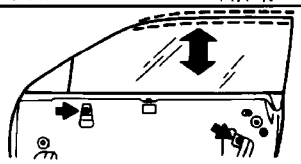	10.0mm ±2mm		10.0mm ±2mm	

NOTE: Forward / Rearward and Up/Down adjustment are to be made at the same time.

80570e06

Fig. 14 FRONT DOOR GLASS ADJUSTMENT SPECIFICATIONS

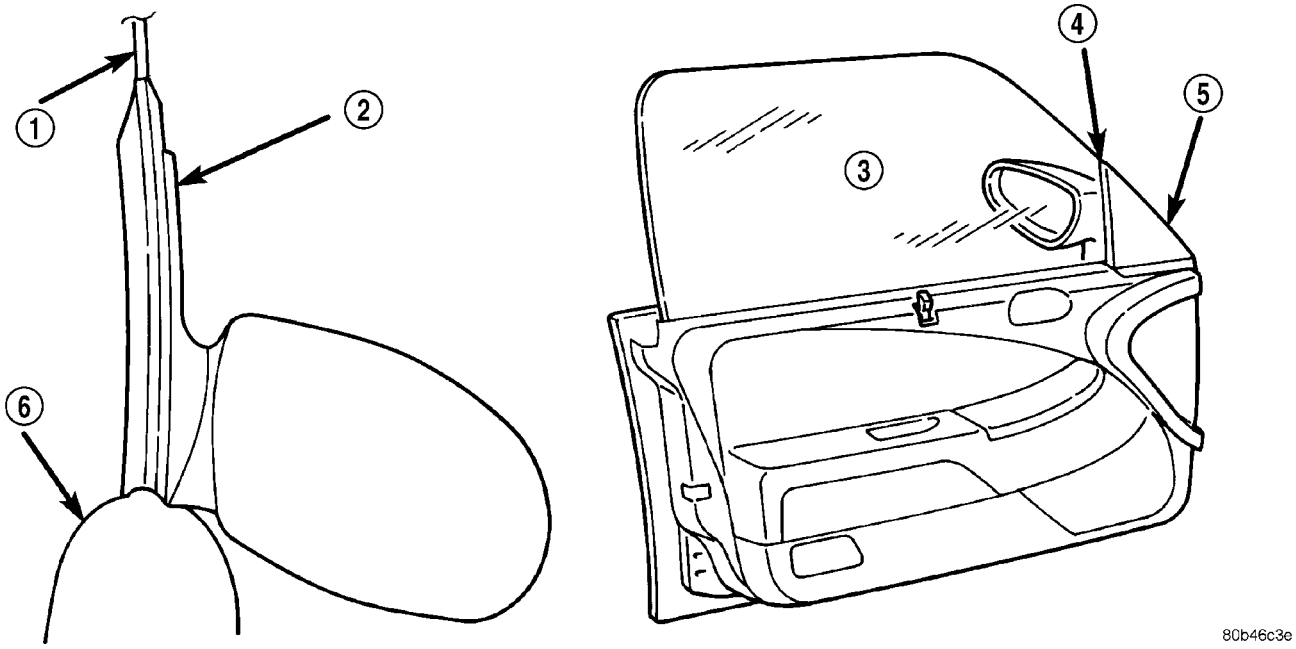

Fig. 15 FRONT/REAR GLASS POSITION

1 - DOOR GLASS
2 - MIRROR STANCHION
3 - DOOR GLASS
4 - FLUSH
5 - MIRROR STANCHION
6 - DOOR

DOOR GLASS (Continued)

DOOR GLASS ALIGNMENT VERIFICATION

NOTE: Door Glass Alignment Verification procedure must be done whenever the door glass is adjusted and after all adjustments are made.

(1) Raise quarter glass to full up position.
(2) Close door and cycle door glass between full up and full down positions.
(3) Verify that door glass operates smoothly and maintains correct alignment to convertible top and quarter glass.
(4) Verify that quarter glass weatherstrip fully contacts door glass.
(5) Verify that no scissoring of the door glass and weatherstrip occurs.
(6) If any of the above conditions are found,
(a) Adjust quarter glass (Refer to 23 - BODY/ ADJUSTABLE QUARTER GLASS - ADJUSTMENTS).
(b) Readjust the door glass as necessary to cure the condition.

DOOR GLASS INNER BELT STABILIZER

REMOVAL

(1) Remove door trim panel.
(2) Lift inner belt weatherstrip as necessary to access nut.
(3) Remove nut attaching inner belt stabilizer to door panel.
(4) Remove inner belt stabilizer from door (Fig. 16).

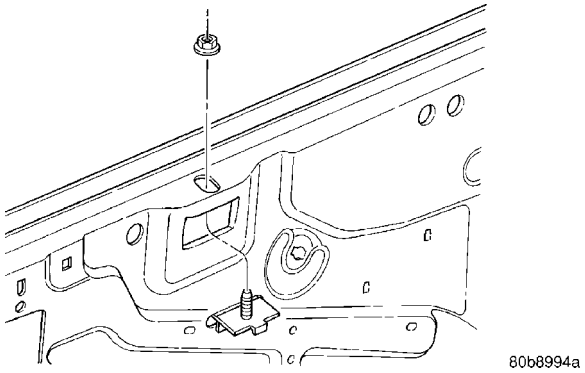

Fig. 16 Inner Belt Stabilizer

INSTALLATION

(1) Place inner belt stabilizer into position.
(2) Lift inner belt weatherstrip as necessary to access nut.
(3) Install nut attaching inner belt stabilizer to door panel. Adjust inner belt stabilizer against glass with enough tension to allow free up and down movement.
(4) Install door trim panel.

EXTERIOR HANDLE

REMOVAL

(1) Remove door trim panel(Refer to 23 - BODY/ DOOR - FRONT/TRIM PANEL - REMOVAL).
(2) Raise door glass.
(3) Remove water dam as necessary to gain access- (Refer to 23 - BODY/DOOR - FRONT/WATERDAM - REMOVAL).
(4) Disconnect latch rod at door latch.
(5) Remove nuts attaching door handle to outer door panel (Fig. 17).
(6) Remove outside door handle from door.

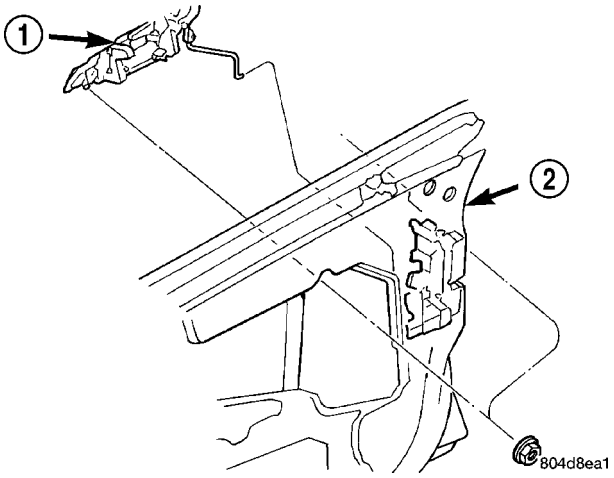

Fig. 17 OUTSIDE DOOR HANDLE - JR27 ONLY

1 - OUTSIDE DOOR HANDLE
2 - DOOR

INSTALLATION

(1) Position outside door handle on door (Fig. 17).
(2) Install nuts attaching door handle to outer door panel.
(3) Connect latch rod at door latch.
(4) Install water dam (Refer to 23 - BODY/DOOR - FRONT/WATERDAM - INSTALLATION).
(5) Install door trim panel(Refer to 23 - BODY/ DOOR - FRONT/TRIM PANEL - INSTALLATION).
(6) Verify door handle operation. Adjust door latch as necessary.

HINGE

REMOVAL

(1) Open and support door on a suitable lifting device.

(2) Remove bolts attaching door check strap to lower A–pillar for greater access, if necessary.

(3) Mark position of hinge on both the door end frame and lower A–pillar with a grease pencil or other suitable device to ease installation.

(4) Remove bolts attaching hinge to door end frame (Fig. 18).

(5) Remove bolts attaching hinge to lower A–pillar and remove the hinge.

(6) Remove door hinge from vehicle.

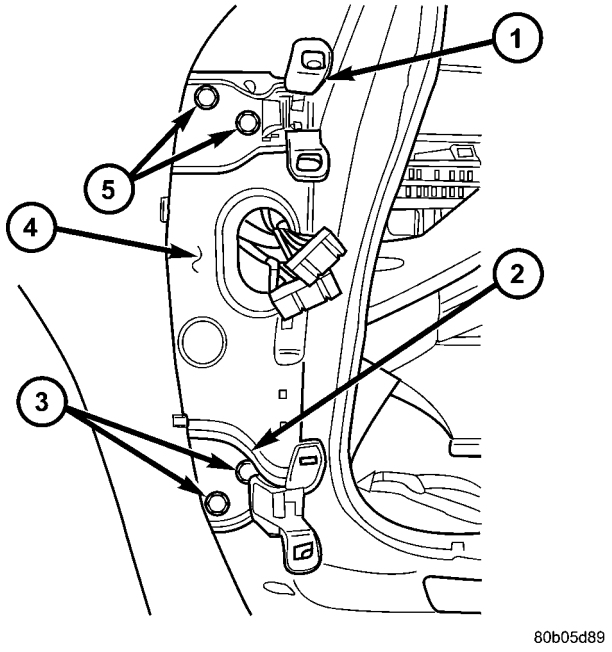

Fig. 18 FRONT DOOR HINGES

1 - UPPER HINGE
2 - LOWER HINGE
3 - LOWER HINGE BOLTS
4 - A-PILLAR
5 - UPPER HINGE BOLTS

INSTALLATION

(1) If necessary, paint new door hinge prior to installation.

(2) Loosely install bolts attaching hinge to lower A–pillar (Fig. 18).

(3) Door on a suitable lifting device position door to the hinge on vehicle.

(4) Loosely install bolts attaching hinge to door end frame.

(5) Align hinge to marks made previously and tighten all bolts.

(6) Install bolts attaching door check strap to lower A-pillar.

(7) Verify door fit and operation. Adjust door hinge for proper door alignment, if necessary.

LATCH

REMOVAL

(1) Remove door trim panel and watershield.

(2) Raise door glass.

(3) Remove the bolt and nut for the rear glass run channel and position aside.

(4) Disconnect lock rod from lock button bellcrank.

(5) Disengage lock and latch rods from clips on inner door panel (Fig. 19) or (Fig. 20).

(6) Disconnect lock and latch rods from outside door handle and key cylinder at door latch (Fig. 21).

(7) Disconnect wire connector from power door lock motor.

(8) Remove screws attaching door latch to door end frame (Fig. 22).

(9) Remove door latch from vehicle.

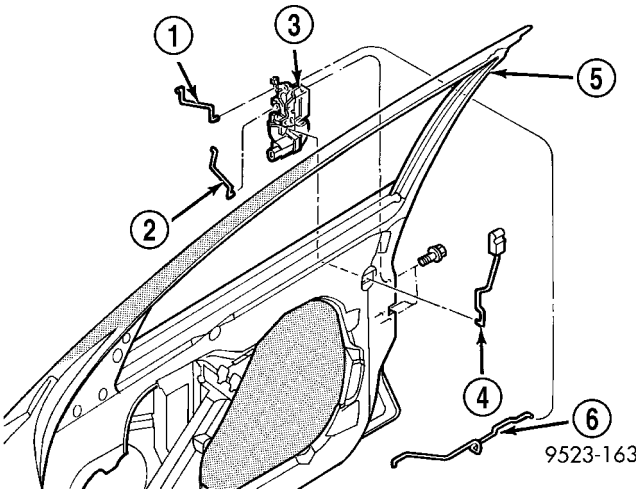

Fig. 19 Front Door Latch

1 - LATCH LINKAGE
2 - LOCK LINKAGE
3 - LATCH
4 - LOCK BUTTON
5 - FRONT DOOR
6 - LATCH RELEASE LINKAGE

INSTALLATION

CAUTION: Do not close door before adjusting the door latch. Door may fail to reopen.

(1) Position door latch on vehicle.

(2) Install screws attaching door latch to door end frame.

(3) Connect wire connector to power door lock motor.

LATCH (Continued)

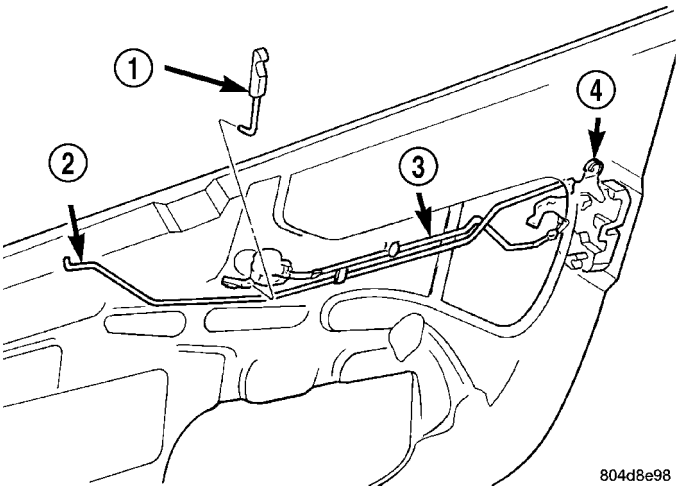

Fig. 20 Latch and Lock Rod Clips

1 - INSIDE LOCK BUTTON
2 - LATCH ROD
3 - LOCK ROD
4 - DOOR LATCH

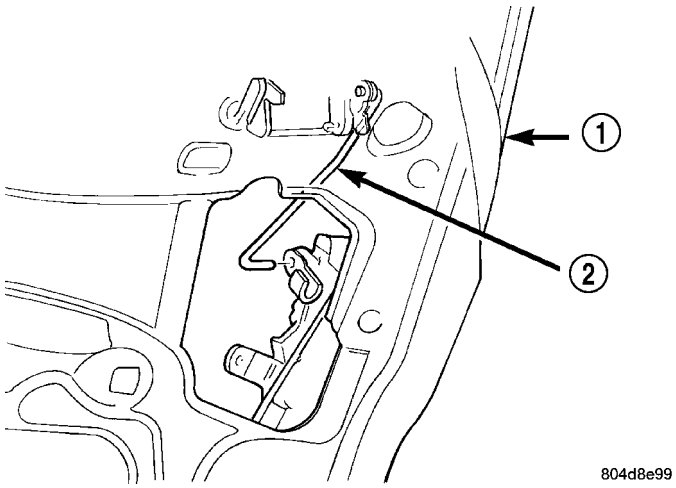

Fig. 21 Lock and Latch Rods At Door Latch

1 - DOOR
2 - DOOR LATCH ROD

(4) Connect lock and latch rods from outside door handle and key cylinder at door latch.

(5) Engage lock and latch rods to clips on inner door panel.

(6) Connect lock rod from lock button bellcrank.

(7) Position the rear glass run channel back and install the bolt and nut.

(8) Adjust door latch.

(9) Verify operation of door latch. Readjust if necessary.

(10) Install door trim panel (Refer to 23 - BODY/DOOR - FRONT/TRIM PANEL - INSTALLATION) and water dam (Refer to 23 - BODY/DOOR - FRONT/WATERDAM - INSTALLATION).

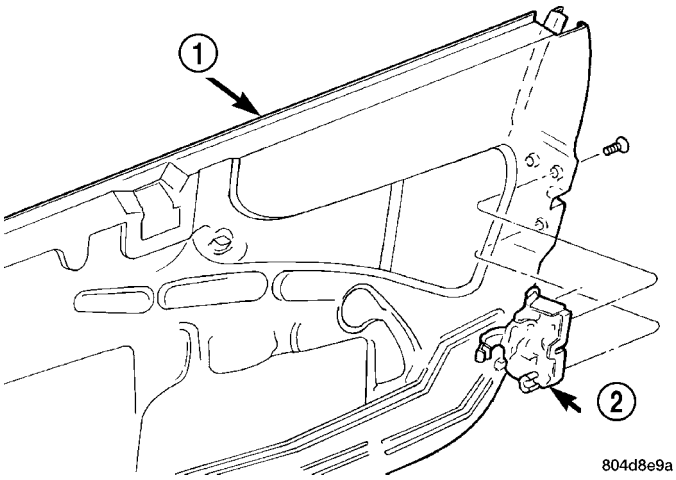

Fig. 22 Door Latch

1 - DOOR
2 - DOOR LATCH

ADJUSTMENTS

ADJUSTMENT

(1) Insert a suitable allen wrench through elongated slot in door end frame and loosen bolt 1/2 to one full turn (Fig. 23).

(2) Cycle outside door handle twice.

(3) Tighten adjusting screw to 3.4 N·m (30 in. lbs.) torque.

(4) Verify latch operation.

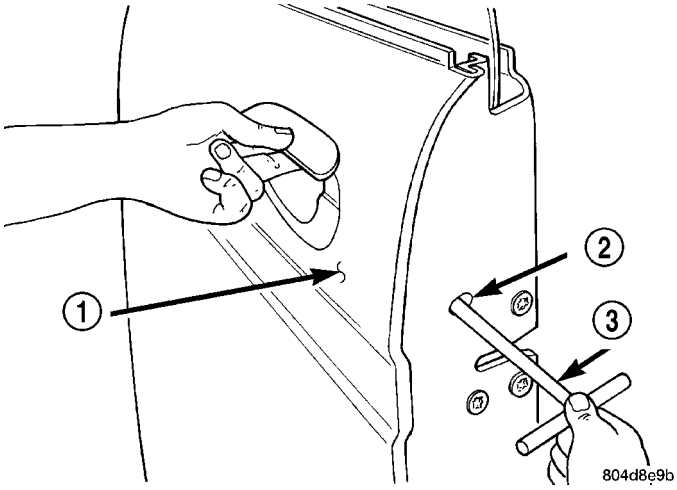

Fig. 23 Door Latch Adjustment

1 - DOOR
2 - SLOT
3 - ALLEN WRENCH

LATCH STRIKER

REMOVAL

(1) Mark outline of door latch striker on B-pillar to aid in installation.

(2) Remove screws attaching door latch striker to B-pillar (Fig. 24).

(3) Remove latch striker from vehicle.

NOTE: Be sure to check for any shims between door latch striker and B-pillar. If any shims are found, they must be reinstalled with the new door latch striker to maintain proper door operation.

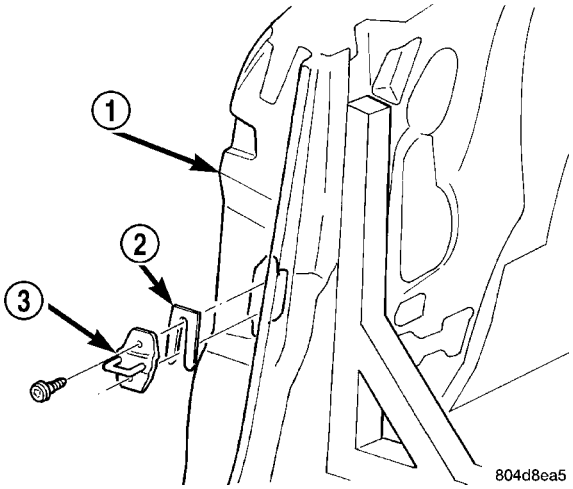

Fig. 24 Door Latch Striker

1 - B-PILLAR
2 - SHIM
3 - DOOR LATCH STRIKER

INSTALLATION

(1) Position door latch striker and any shims on vehicle.

(2) Loosely install screws attaching latch striker to B-pillar.

(3) Align latch striker to marks on B-pillar made previously.

(4) Tighten all fasteners.

(5) Verify door fit and operation. Adjust door latch striker as necessary.

LOCK BUTTON BELL CRANK

REMOVAL

(1) Remove door trim panel.

(2) Disengage clip holding lock linkage to bell crank.

(3) Rotate bell crank until retaining ears align with slots in door panel.

(4) Remove bell crank from door (Fig. 25).

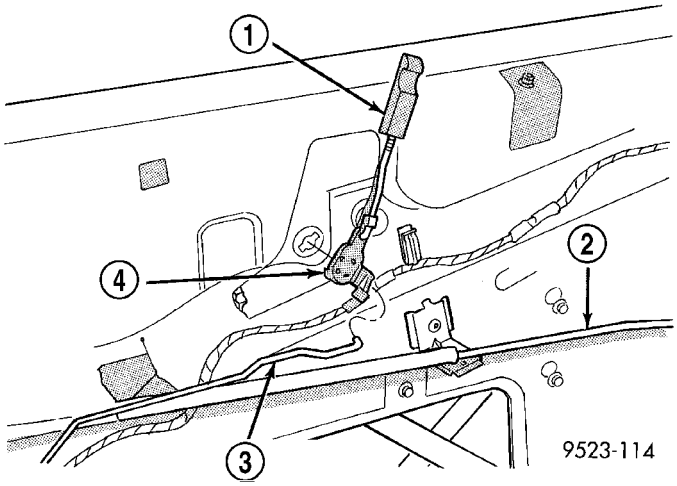

Fig. 25 Lock Button Bell Crank – Typical

1 - LOCK BUTTON
2 - LATCH LINKAGE
3 - LOCK LINKAGE
4 - BELL-CRANK

INSTALLATION

(1) Place bell crank into position.

(2) Rotate bell crank until retaining ears align with slots in door panel.

(3) Engage clip attaching lock linkage to bell crank.

(4) Install door trim panel.

LOCK CYLINDER

DESCRIPTION

Ignition, door, deck lid, and rear hatch lock cylinders are all codable to the key. Lock barrels, tumblers, and tumbler springs are available to allow the technician to change replacement locks cylinders to match the customer's original key set. See the appropriate section in this manual for lock cylinder removal. See the Mopar® catalogue for part numbers and lock coding procedures.

REMOVAL

(1) Remove outside door handle.
(2) Remove clip attaching lock cylinder to outside door panel (Fig. 26).
(3) Disengage clip attaching link to key cylinder.
(4) Remove lock cylinder from outer door panel.

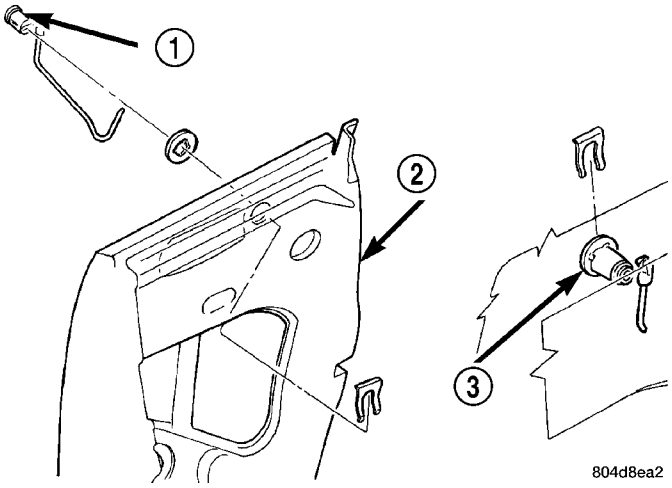

Fig. 26 Door Lock Cylinder

1 - DOOR LOCK CYLINDER
2 - DOOR
3 - DOOR LOCK CYLINDER

INSTALLATION

(1) Position lock cylinder and gasket in door outer panel.
(2) Install clip attaching lock cylinder to outside door panel.
(3) Engage link to key cylinder.
(4) Install outside door handle.

SIDE VIEW MIRROR FLAG/ DOOR GLASS CHANNEL

REMOVAL

(1) Remove side view mirror (Refer to 23 - BODY/ EXTERIOR/SIDE VIEW MIRROR - REMOVAL).
(2) Partially lower the door glass.
(3) Remove inner belt line glass seal.
(4) Remove attaching fasteners (Fig. 27).
(5) Remove the adjustment stud. Count the number of turns to aid installation.
(6) Remove mirror flag.

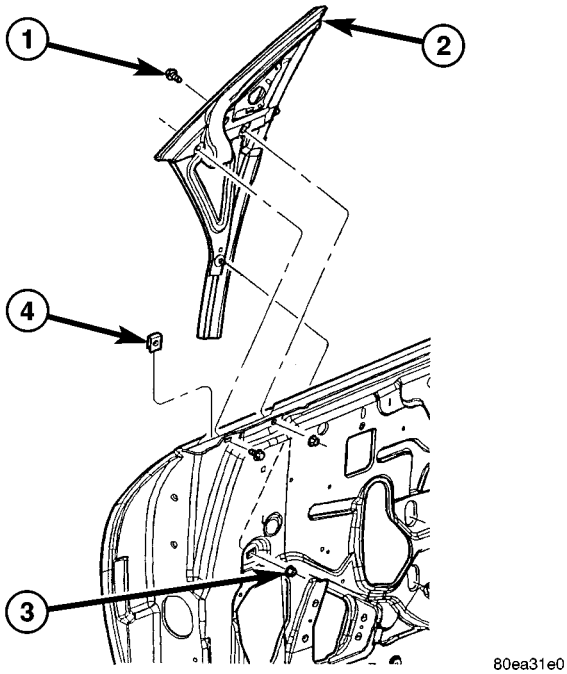

Fig. 27 SIDE VIEW MIRROR FLAG/DOOR GLASS CHANNEL

1 - EXTERIOR BOLT
2 - MIRROR FLAG
3 - INTERIOR FASTENERS
4 - U-NUT

INSTALLATION

(1) Align glass into the guide and position the mirror flag on door. (Fig. 27)
(2) Install the adjustment stud and tighten the number of turns counted in the removal procedure.
(3) Install attaching fasteners and tighten to 7 Nm (62 in. lbs.).
(4) Install the inner glass seal.
(5) Verify glass fit at mirror flag. Upper edge of the glass should be flush with the mirror flag top edge. Adjust the mirror flag position as necessary. (Fig. 13)
(6) Install side view mirror (Refer to 23 - BODY/ EXTERIOR/SIDE VIEW MIRROR - INSTALLATION).

TRIM PANEL

REMOVAL

(1) Roll door glass down.

(2) Disengage two clips attaching speaker grille to door trim panel. They are at the front of the grille, one near the top, and the other one at the bottom.

(3) Remove three large washer-headed screws surrounding the speaker (Fig. 28).

(4) Remove access cover at front of door trim panel. Remove by prying at its rear edge (Fig. 29).

(5) Remove red courtesy reflector from lower tail or door. Disengage by prying at screwdriver notch at bottom of reflector.

(6) Remove flag trim panel from door by prying off at two attachment clips points (Fig. 29).

(7) Remove seven screws attaching door trim panel to door: (Fig. 28) and (Fig. 29).

(a) One screw is located at lower rear screw pocket.

(b) Three screws located along the bottom of door.

(c) One screw located inside handle opening.

(d) One screw located at the upper front.

(e) One screw in the pull cup.

(8) Disengage two hidden clips attaching at the rear of the trim panel, by prying off at two attachment clip points.

(9) Lift trim panel upward and away from door, disengage trim panel from upper retainer channel.

(10) Disengage clip attaching latch linkage to back door handle.

(11) Disconnect electrical connectors as necessary, including lower foot light, If equipped.

(12) Remove door trim panel from door.

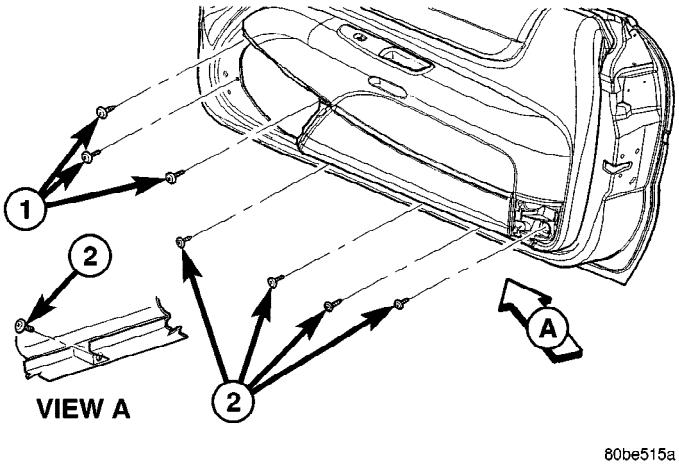

Fig. 28 Lower Door Trim Panel Removal

1 - SCREWS AT SPEAKER LOCATION
2 - BOTTOM OF DOOR TRIM PANEL

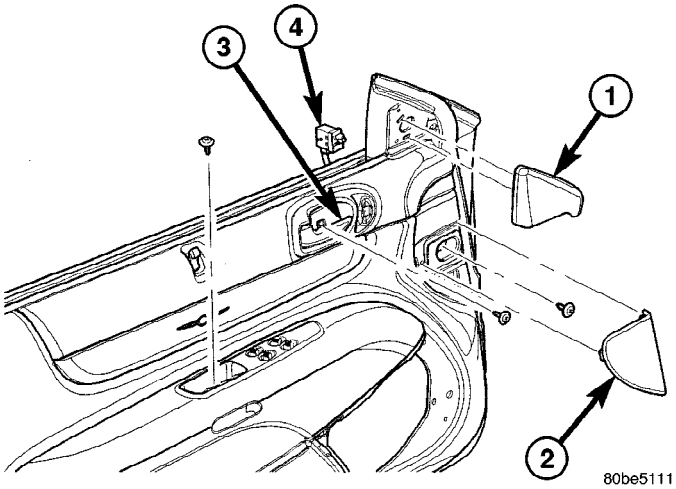

Fig. 29 Mirror Bezel and Door Trim Access Cover

1 - FLAG TRIM PANEL
2 - DOOR TRIM ACCESS COVER
3 - INSIDE REMOTE HANDLE
4 - POWER DOOR LOCK SWITCH

INSTALLATION

(1) Position door trim panel near to door.

(2) Connect electrical connectors as necessary, including foot light, if so equipped.

(3) Engage clip attaching latch linkage to inside door handle.

(4) Lift the door trim slightly to get the lock knob into its bezel opening on the panel.

(5) Place front portion of upper trim strip flange into retainer channel, while seating white forward locator pin into mating hole in sheetmetal at front of door.

(6) Drive screw into forward locator cup.

(7) With rear of panel slightly lifted, engage remainder of trim strip flange into retainer channel, working from front to back, pressing down firmly.

(8) Engage two hidden clips attaching rear of door trim to thier mating (green) grommet holes in the door. Press the rear of the panel firmly in toward the door, listening for engagement clicking sounds at BOTH of the clips.

(9) Install seven screws attaching door trim panel to door: (Fig. 28) and (Fig. 29).

(a) One screw in the pull cup.

(b) One screw located inside handle opening.

(c) One screw located at the upper front.

(d) One screw is located at lower rear screw pocket.

(e) Three screws located along the bottom of door.

(10) Snap screw covers closed.

(11) Install three large washer headed screws surrounding the speaker (Fig. 28).

TRIM PANEL (Continued)

(12) Install speaker grille by first engaging rear edge hinge flaps to mating slots, then pressing grille on to seat the two clips at front.

(13) Install red courtesy reflector by first engaging rear edge hinge flaps to mating slots, then snap front in to position.

(14) Install access cover at front of door trim panel. First engage slots at front, then snap in at rear edge (Fig. 29).

(15) Place flag trim panel into position and engage clips (Fig. 29).

(16) Close door window.

REAR VERTICAL GUIDE BAR

REMOVAL - JR-27

(1) Remove door trim panel and watershield.

(2) Remove the lift plate attaching screws (Fig. 30).

(3) Remove nut attaching top of guide bar to inner door panel.

(4) Using a suitable allen wrench, hold jack screw stationary while removing nut attaching bottom of guide bar to inner door panel.

(5) Remove guide bar from vehicle and remove through access hole in inner door panel (Fig. 31).

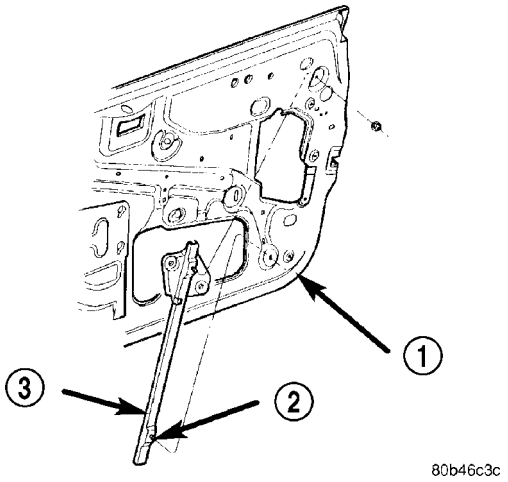

Fig. 31 Rear Vertical Guide Bar

1 - DOOR
2 - JACK SCREW
3 - REAR VERTICAL GUIDE BAR

INSTALLATION - JR-27

(1) If a new guide bar is being installed, preset bottom jack screw using old guide bar as a reference.

(2) Position rear guide bar on vehicle.

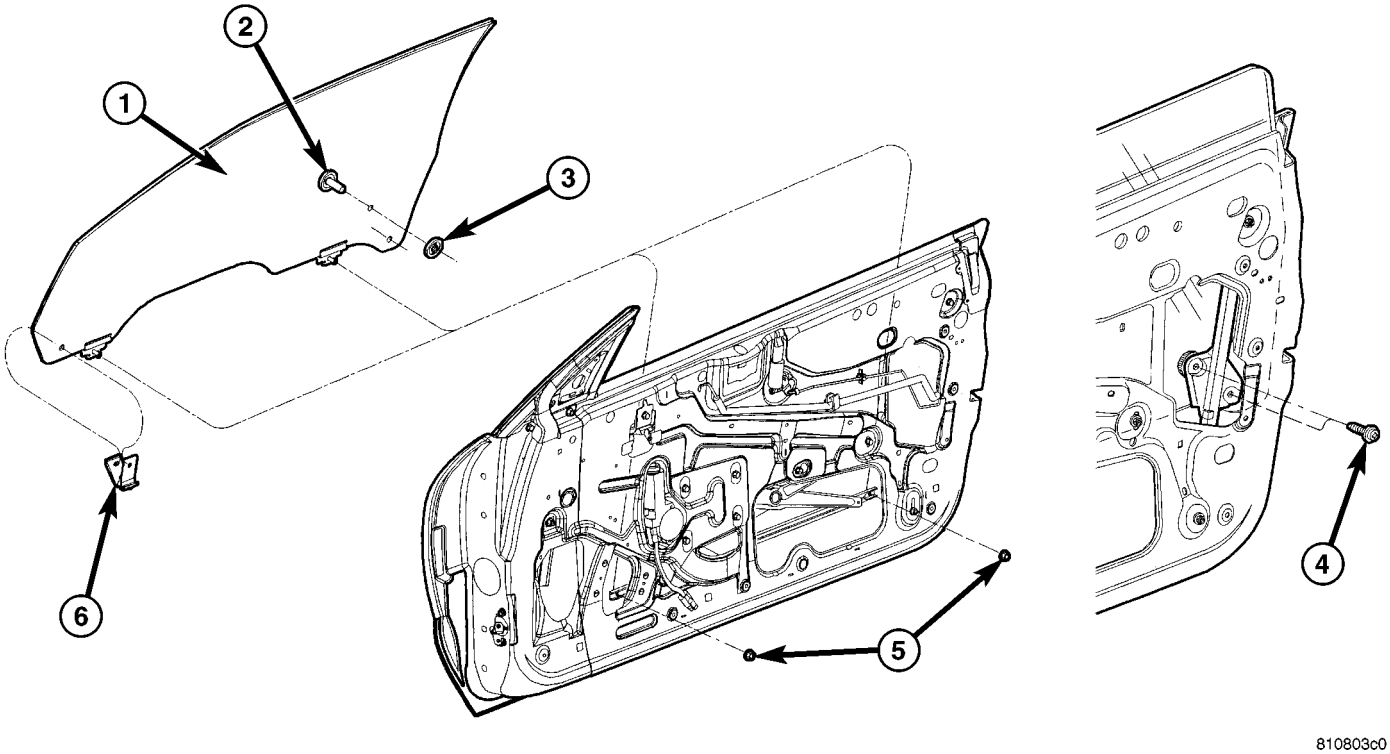

Fig. 30 GLASS TO LIFT PLATE ATTACHING SCREWS

1 - FRONT DOOR GLASS
2 - GLASS TO LIFT PLATE RETAINER AND NUT ASSEMBLY
3 - GLASS TO LIFT PLATE BUSHING
4 - GLASS TO LIFT PLATE ATTACHING SCREWS
5 - GLASS TO WINDOW CHANNEL ATTACHING NUTS
6 - DOOR GLASS UP STOP

REAR VERTICAL GUIDE BAR (Continued)

(3) Using a suitable allen wrench, hold jack screw stationary while installing nut attaching bottom of guide bar to inner door panel.

(4) Install nut attaching top of rear guide bar to inner door panel.

(5) Verify glass fit and operation. Adjust door glass as necessary.

(6) Install door trim panel and watershield.

WINDOW REGULATOR

REMOVAL

REMOVAL

NOTE: For power window motor removal procedures, (Refer to 8 - ELECTRICAL/POWER WINDOWS/WINDOW MOTOR - REMOVAL).

(1) Remove door trim panel. (Refer to 23 - BODY/DOOR - FRONT/TRIM PANEL - REMOVAL)

(2) Remove glass from regulator roller channel. Secure glass in the up position in the door frame.

(3) Disconnect power window motor wire connector.

(4) Loosen screw attaching regulator scissor channel to door panel.

(5) Remove screw and bolt heads from keyhole slots in door panel.

(6) Loosen bolts attaching regulator to door panel.

(7) Remove regulator from door panel (Fig. 32).

(8) Slide regulator rearward and rotate forward end of roller channel through access hole in door panel.

REMOVAL- JR-27 ONLY

NOTE: For power window motor removal procedures,(Refer to 8 - ELECTRICAL/POWER WINDOWS/WINDOW MOTOR - REMOVAL).

(1) Remove door trim panel and water shield.

(2) Disconnect wire connector to power window motor.

(3) Remove nuts attaching regulator lift channel to door glass(Refer to 23 - BODY/DOOR - FRONT/DOOR GLASS - REMOVAL).

(4) Secure door glass in upward position.

(5) Mark position of rear bolt of roller channel to inner door panel to aid in installation.

(6) Remove bolt attaching rear of roller channel to door panel.

(7) Loosen bolt attaching front of roller channel to door panel.

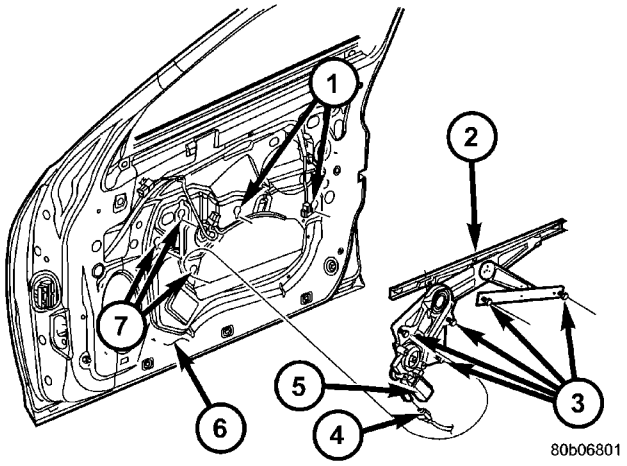

Fig. 32 FRONT DOOR REGULATOR

1 - MOUNTING SLOTS
2 - REGULATOR
3 - MOUNTING BOLTS
4 - ELECTRICAL CONNECTOR
5 - REGULATOR
6 - INNER DOOR
7 - MOUNTING SLOTS

(8) Remove roller channel from door panel (Fig. 33).

(9) Loosen bolts attaching window regulator to inner door panel reinforcement.

(10) Remove bolt heads from key hole slots in inner door panel.

(11) Remove window regulator through large hole in inner door panel (Fig. 33).

(12) Remove power window motor from regulator (Refer to 8 - ELECTRICAL/POWER WINDOWS/WINDOW MOTOR - REMOVAL).

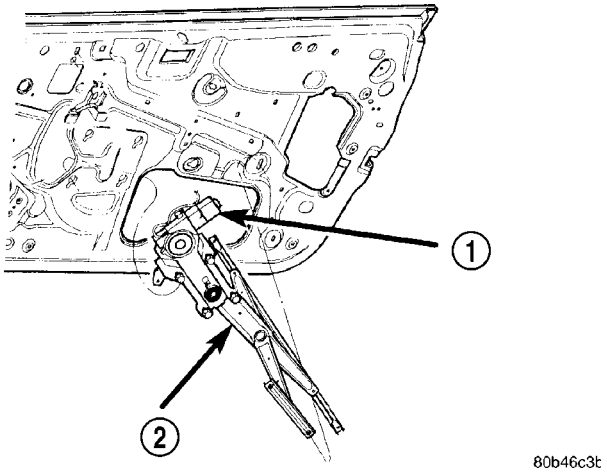

Fig. 33 Power Window Regulator

1 - POWER WINDOW MOTOR
2 - POWER WINDOW REGULATOR

WINDOW REGULATOR (Continued)

INSTALLATION

INSTALLATION

NOTE: For power window motor service procedures (Refer to 8 - ELECTRICAL/POWER WINDOWS/WINDOW MOTOR - INSTALLATION).

(1) Position regulator in door through access hole in door panel.
(2) Position regulator on door panel.
(3) Tighten bolts attaching regulator to door panel.
(4) Position screw and bolt heads in keyhole slots in door panel.
(5) Tighten screw attaching regulator scissor channel to door panel.
(6) Connect power window motor wire electrical connector.
(7) Position glass in regulator roller channel.
(8) Tighten fasteners attaching door glass to roller channel.
(9) Install door trim panel. (Refer to 23 - BODY/DOOR - FRONT/TRIM PANEL - INSTALLATION)

INSTALLATION - JR-27 ONLY

NOTE: For power window motor installation procedures, (Refer to 8 - ELECTRICAL/POWER WINDOWS/WINDOW MOTOR - INSTALLATION).

(1) Install power window motor on regulator (Refer to 8 - ELECTRICAL/POWER WINDOWS/WINDOW MOTOR - INSTALLATION).
(2) Move window regulator into position in door and engage bolt heads into key hole slots in inner door panel reinforcement and tighten bolts.
(3) Install roller channel to door panel.
(4) Install bolt at rear of roller channel. Make sure that bolt is aligned to mark on inner door panel made previously.
(5) Tighten front and rear bolts of roller channel.
(6) Install nuts attaching regulator lift channel to door glass.
(7) Verify glass fit and operation. Adjust door glass, if necessary.
(8) Connect wire connector to power window motor.
(9) Install door water dam (Refer to 23 - BODY/DOOR - FRONT/WATERDAM - INSTALLATION) and trim panel (Refer to 23 - BODY/DOOR - FRONT/TRIM PANEL - INSTALLATION).

APPLIQUE

REMOVAL

(1) Pull the glass run weatherstrip away from the window opening to access the applique screws. (Refer to 23 - BODY/WEATHERSTRIP/SEALS/FDR GLASS RUN WEATHERSTRIP - REMOVAL)
(2) Remove the screws and remove the applique (Fig. 34).

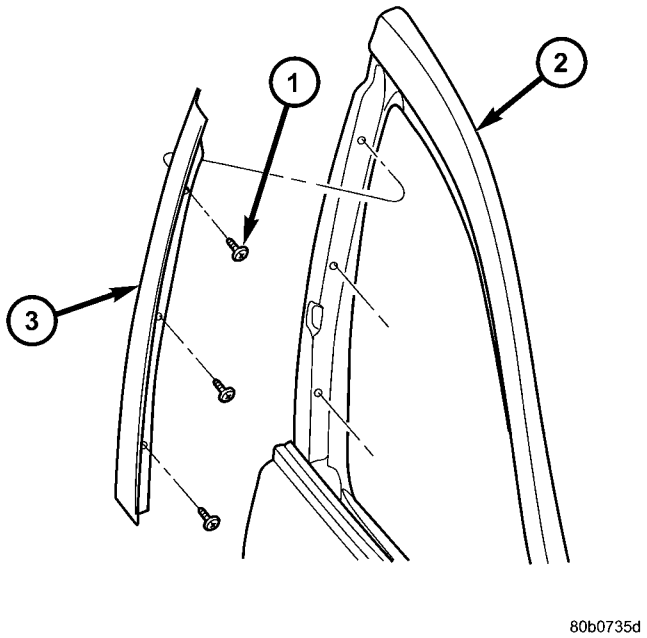

Fig. 34 01 FRONT DOOR APPLIQUE

1 - SCREWS
2 - FRONT DOOR
3 - APPLIQUE

INSTALLATION

(1) Install the applique and install the screws.
(2) Position the glass run weatherstrip back into position. (Refer to 23 - BODY/WEATHERSTRIP/SEALS/FRONT DOOR GLASS RUN WEATHERSTRIP - INSTALLATION)

DOOR PIN ASSEMBLY

REMOVAL

(1) Open the door, remove the door pin bolts and remove the door pin. (Fig. 35)

(2) Remove the receiver bolts and remove the receiver and shims if equipped. (Fig. 36)

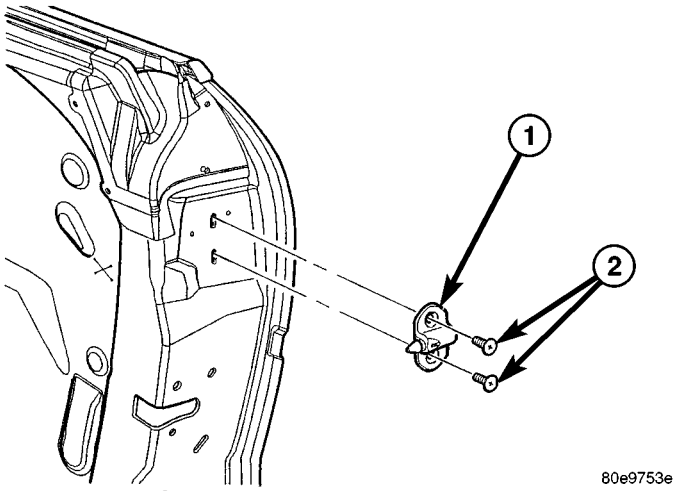

Fig. 35 DOOR PIN ASSEMBLY

1 - DOOR PIN ASSEMBLY
2 - BOLTS (2)

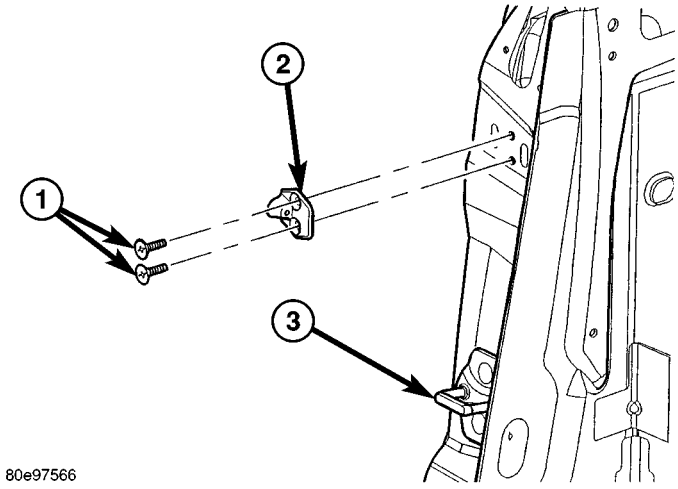

Fig. 36 DOOR PIN RECEIVER

1 - BOLTS (2)
2 - RECEIVER
3 - DOOR LATCH STRIKER

INSTALLATION

(1) Install the door pin assembly and install the bolts.

(2) Tighten the bolts to 12 N·m (9 ft. lbs.).

(3) Install the receiver and the shims if equipped.

(4) Install the receiver bolts and tighten to 12 N·m (9 ft. lbs.).

(5) Adjust the door pin assembly and receiver. (Refer to 23 - BODY/DOOR - FRONT/DOOR PIN ASSEMBLY - ADJUSTMENTS)

ADJUSTMENTS

ADJUSTMENT

(1) Open the door and mark the position of the door pin receiver using a grease pencil or equivalent.

(2) Put clay or other suitable substance, into the hole of the door pin receiver.

(3) Lightly close the door to indent the clay with the door pin. (Fig. 37)

NOTE: The alignment of the pin indentation to the receiver cup should be centered.

(4) If the door pin receiver needs to go for/aft in the car, remove the door pin reciever and add/remove the pin receiver shims if necessary. (Refer to 23 - BODY/DOOR - FRONT/DOOR PIN ASSEMBLY - REMOVAL)

NOTE: 3 mm total of shims are standard, but this can vary depending on the fit of the door. Door pin shims are available in 1 and 0.5 mm sizes.

(5) For up/down movement, loosen the receiver bolts and move the door pin up or down if necessary.

(6) Check alignment and re-adjust if required and tighten the bolts to 12 N·m (9 ft. lbs.).

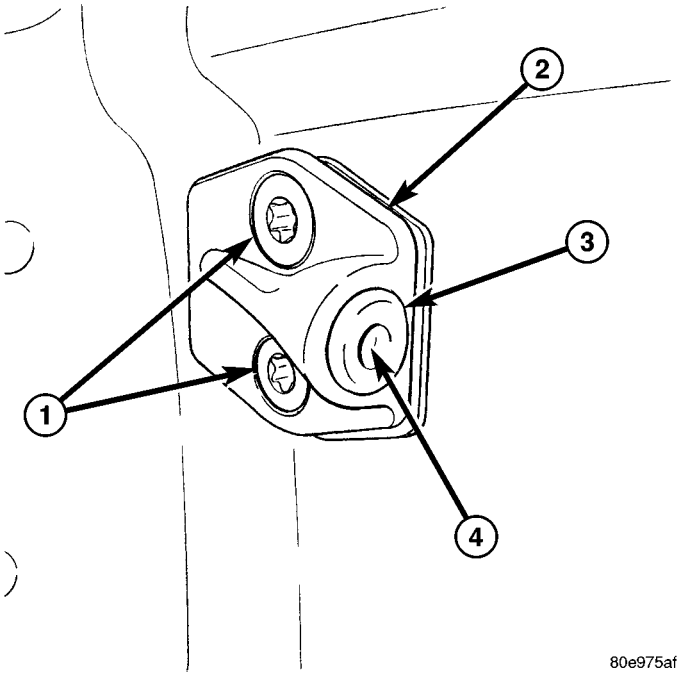

Fig. 37 DOOR PIN RECEIVER ADJUSTMENT

1 - BOLTS (2)
2 - PIN RECEIVER
3 - CLAY
4 - PIN INDENTATION

WATERSHIELD

REMOVAL

(1) Remove door trim panel. (Refer to 23 - BODY/DOOR - FRONT/TRIM PANEL - REMOVAL)

(2) Remove door speaker, if equipped. (Refer to 8 - ELECTRICAL/AUDIO/SPEAKER - REMOVAL)

CAUTION: Do not use dirty hands or lint type gloves when removing the watershield, adhesive bead will be ruined.

(3) Peel watershield and adhesive away from the door inner panel. Start in one corner, carefully working towards the opposite corner. (Fig. 38).

(4) Store watershield flat, adhesive side up, covering with wax paper or similar if available to prevent contaminating the adhesive bead.

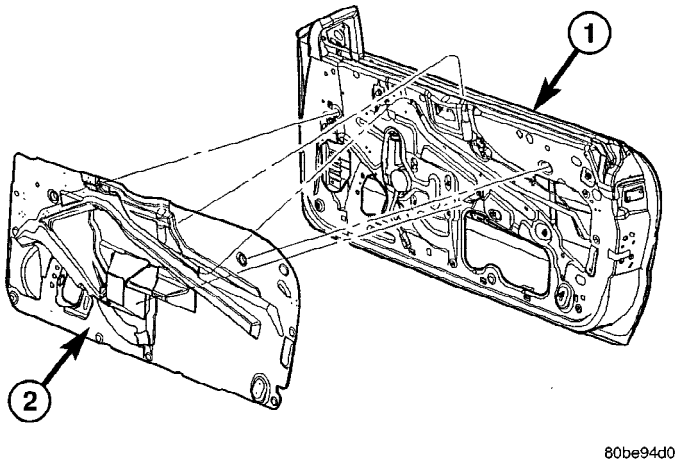

Fig. 38 DOOR WATERSHIELD

1 - DOOR
2 - WATERSHIELD

INSTALLATION

(1) Insure that the adhesive bead is not broken, so the complete perimeter of the door seal will be maintained. Replace any loose/damaged adhesive with butyl sealer or similar. If repair is not possible, replace with a new watershield

(2) Place the watershield into position using the two depressions that locate into the corresponding holes in the door inner panel. (Fig. 38)

(3) Firmly press the adhesive around the perimeter of the door insure complete sealing. Make sure to properly route wiring and linkages.

(4) Install door speaker, if equipped. (Refer to 8 - ELECTRICAL/AUDIO/SPEAKER - INSTALLATION)

(5) Install door trim panel. (Refer to 23 - BODY/DOOR - FRONT/TRIM PANEL - INSTALLATION)

DOORS - REAR

TABLE OF CONTENTS

	page
APPLIQUE	
REMOVAL	45
INSTALLATION	45
REAR CHECK STRAP	
REMOVAL	46
INSTALLATION	46
DOOR	
REMOVAL	46
INSTALLATION	46
DOOR GLASS	
REMOVAL	47
INSTALLATION	47
EXTERIOR HANDLE	
REMOVAL	47
INSTALLATION	47
HINGE	
REMOVAL	48
INSTALLATION	48
LATCH	
REMOVAL	48
INSTALLATION	48
LATCH STRIKER	
REMOVAL	49
INSTALLATION	49
TRIM PANEL	
REMOVAL	49
INSTALLATION	50
WINDOW REGULATOR	
REMOVAL	50
INSTALLATION	50
WATERSHIELD	
REMOVAL	51
INSTALLATION	51

APPLIQUE

REMOVAL

(1) Pull the glass run weatherstrip away from the window opening to access the applique screws. (Refer to 23 - BODY/WEATHERSTRIP/SEALS/REAR DOOR GLASS RUN WEATHERSTRIP - REMOVAL)

(2) Remove the screws under the glass run weatherstrip (Fig. 1).

(3) Remove the upper push-pin fastener.

(4) Remove the lower inner screw and remove the applique.

INSTALLATION

(1) Install the applique and the screws.

(2) Install the upper push-in fastener.

(3) Install the lower screw.

(4) Position the glass run weatherstrip back into position. (Refer to 23 - BODY/WEATHERSTRIP/SEALS/REAR DOOR GLASS RUN WEATHERSTRIP - INSTALLATION)

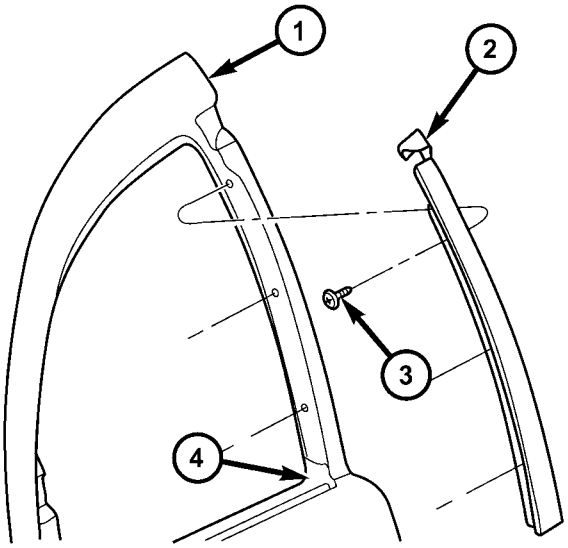

80b0a4f7

Fig. 1 REAR DOOR APPLIQUE

1 - DOOR
2 - APPLIQUE
3 - SCREWS
4 - INNER SCREW

REAR CHECK STRAP

REMOVAL

(1) Remove rear door trim panel.

(2) Remove the watershield as necessary to gain access to the latch.(Refer to 23 - BODY/DOORS - REAR/WATERSHIELD - REMOVAL)

(3) Remove bolt attaching check strap to hinge pillar.

(4) Remove bolt attaching check strap to inner door panel (Fig. 2).

(5) Remove bolts attaching check strap to door end frame.

(6) Remove check strap from vehicle.

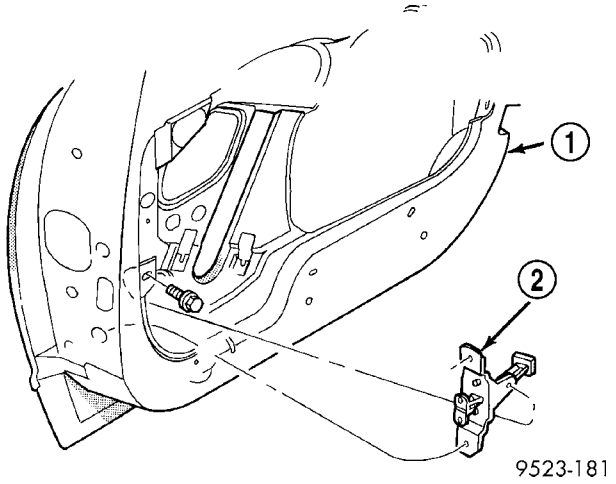

Fig. 2 Rear Door Check Strap

1 - REAR DOOR
2 - CHECK STRAP

INSTALLATION

(1) Place check strap into position.

(2) Install bolts attaching check strap to door end frame.

(3) Install bolt attaching check strap to inner door panel.

(4) Install bolt attaching check strap to hinge pillar.

(5) Postition the watershield back. (Refer to 23 - BODY/DOORS - REAR/WATERSHIELD - INSTALLATION)

(6) Install rear door trim panel.

DOOR

REMOVAL

(1) Open and support door on a suitable lifting device.

(2) Mark all bolt and hinge attachment locations with a grease pencil or other suitable device to aid installation.

(3) Disengage wire connector at hinge pillar (Fig. 3).

(4) Remove bolts attaching door check strap to B-pillar.

(5) Remove the nuts and remove the door from vehicle.

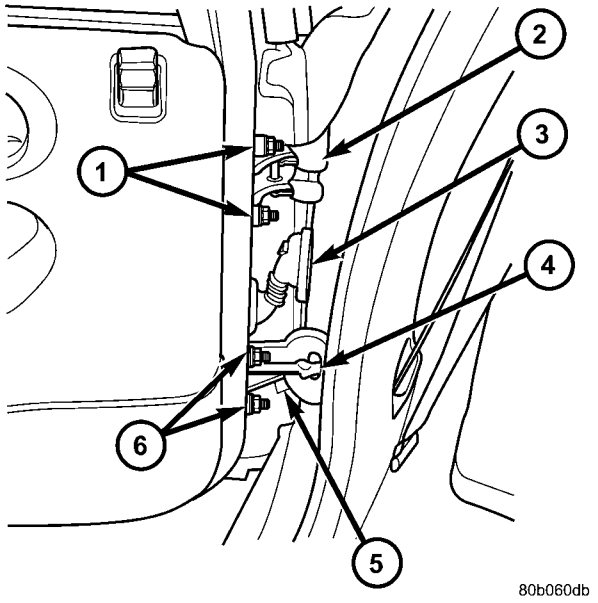

Fig. 3 REAR DOOR/HINGES

1 - UPPER HINGE NUTS
2 - UPPER HINGE
3 - ELECTRICAL CONNECTOR
4 - CHECK STRAP
5 - LOWER HINGE
6 - LOWER HINGE NUTS

INSTALLATION

(1) Position door onto the door hinges and install the nuts.

(2) Install bolts holding door check strap to hinge pillar.

(3) Engage wire connector at hinge pillar.

(4) Verify door fit and operation. Adjust the door for flushness and parallel gaps as necessary.

DOOR GLASS

REMOVAL

(1) Remove door trim panel and inner belt weatherstrip.

(2) Connect power window switch or install crank and lower window to 50 mm (2 in.) from bottom of travel.

(3) Loosen bolts holding rear lower run channel to inner door panel (Fig. 4).

(4) Separate rear run channel from door.

(5) Loosen screws holding regulator roller channel to glass.

(6) Slide roller channel rearward to allow screw heads to pass through key hole slots in channel.

(7) Separate glass from roller channel.

(8) Lift glass upward and out of the opening at top of door.

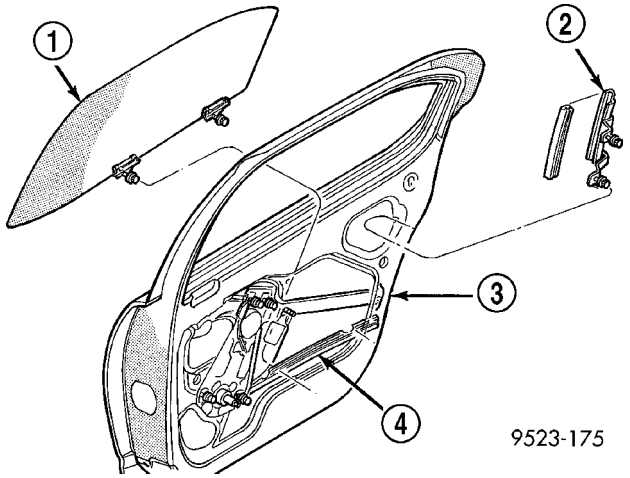

Fig. 4 Rear Door Glass

1 - REAR DOOR GLASS
2 - LOWER RUN CHANNEL
3 - REAR DOOR
4 - LIFT CHANNEL

INSTALLATION

(1) Lower door glass through opening at top of door.

(2) Position door glass onto roller channel.

(3) Slide roller channel forward to allow screw heads to engage key hole slots in channel.

(4) Tighten screws holding regulator roller channel to glass.

(5) Position rear run channel on door.

(6) Tighten bolts holding rear lower run channel to inner door panel.

(7) Install door trim panel and inner belt weatherstrip.

EXTERIOR HANDLE

REMOVAL

(1) Remove rear door trim panel.

(2) Close door glass.

(3) Disengage clip holding linkage to outside handle.

(4) Remove linkage from outside handle (Fig. 5).

(5) Remove nuts holding outside handle to outer door panel.

(6) Remove outside door handle from vehicle.

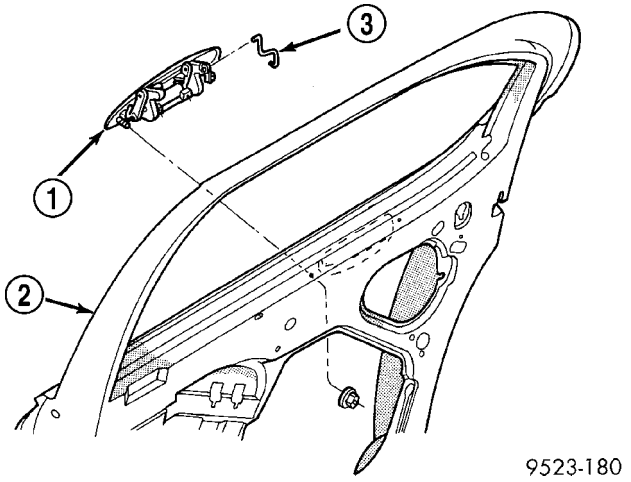

Fig. 5 Rear Door Outside Handle

1 - OUTSIDE DOOR HANDLE
2 - REAR DOOR
3 - LINKAGE

INSTALLATION

(1) Position outside door handle from vehicle.

(2) Install nuts attaching outside handle to outer door panel.

(3) Connect linkage to outside handle (Fig. 5).

(4) Connect clip holding linkage to outside handle.

(5) Replace the clips attaching trim panel to perimeter of door.

(6) Install rear door trim panel.

HINGE

REMOVAL

(1) Remove the door. (Refer to 23 - BODY/DOORS - REAR/DOOR - REMOVAL)

(2) Mark all bolt and hinge attachment locations with a grease pencil or other suitable device to aid installation.

(3) Remove the bolts and remove the hinges (Fig. 6).

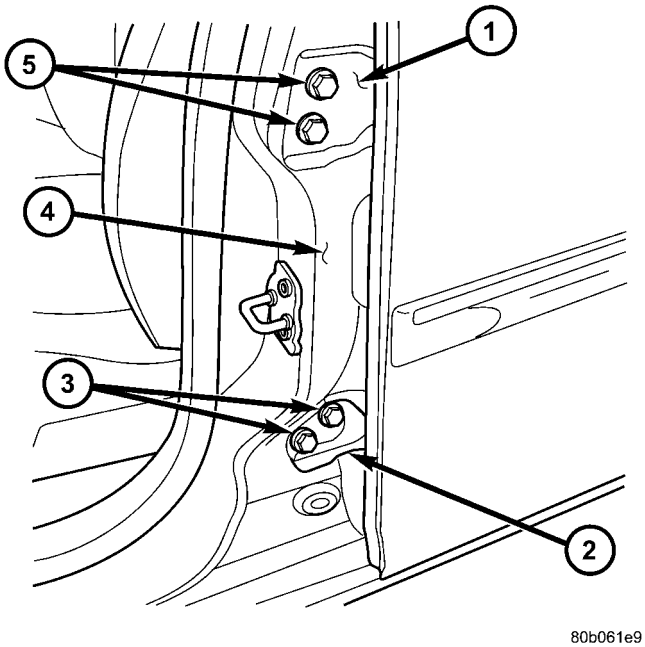

Fig. 6 REAR DOOR HINGES

1 - UPPER HINGE
2 - LOWER HINGE
3 - LOWER HINGE BOLTS
4 - B-PILLAR
5 - UPPER HINGE BOLTS

INSTALLATION

(1) If necessary, paint new door hinge prior to installation.

(2) Position door hinge on vehicle.

(3) Loosely install bolts attaching hinge to lower A–pillar.

(4) Align hinge to marks made previously and tighten all bolts.

(5) Install the door. (Refer to 23 - BODY/DOORS - REAR/DOOR - INSTALLATION)

LATCH

REMOVAL

(1) Remove rear door trim panel.

(2) Close door glass.

(3) Remove lower rear run channel.

(4) Disengage clips attaching linkage rods to door latch.

(5) Remove linkage rods from latch (Fig. 7).

(6) Remove screws attaching latch to door end frame.

(7) Remove latch from door.

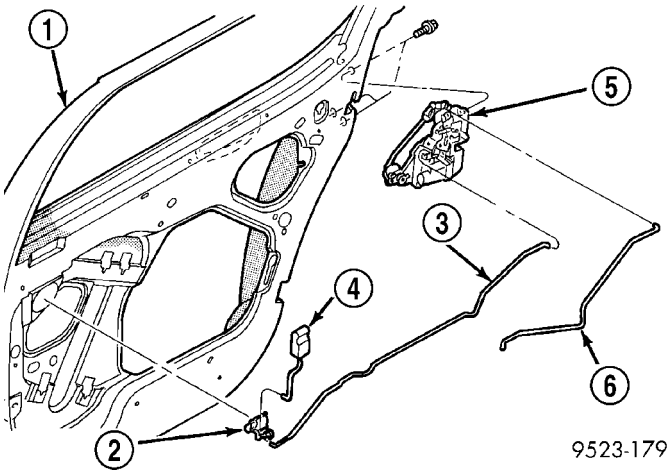

Fig. 7 Rear Door Latch

1 - REAR DOOR
2 - BELL CRANK
3 - LOCK LINKAGE
4 - LOCK BUTTON
5 - LATCH
6 - LATCH LINKAGE

INSTALLATION

CAUTION: Do not close door before adjusting the door latch, door may fail to open.

(1) Place rear door latch into position.

(2) Install screws attaching latch to door end frame.

(3) Install linkage rods from latch.

(4) Engage clips attaching linkage rods to door latch.

(5) Install lower rear run channel.

(6) Open door glass.

(7) Install rear door trim panel.

LATCH STRIKER

REMOVAL

(1) Mark outline of door latch striker on C-pillar to aid installation.

(2) Remove screws attaching door latch striker to C-pillar (Fig. 8).

(3) Remove door latch striker from vehicle.

NOTE: Be sure to check for any shims between door latch striker and C-pillar. If any shims are found, they must be reinstalled with the new door latch striker to maintain proper door operation.

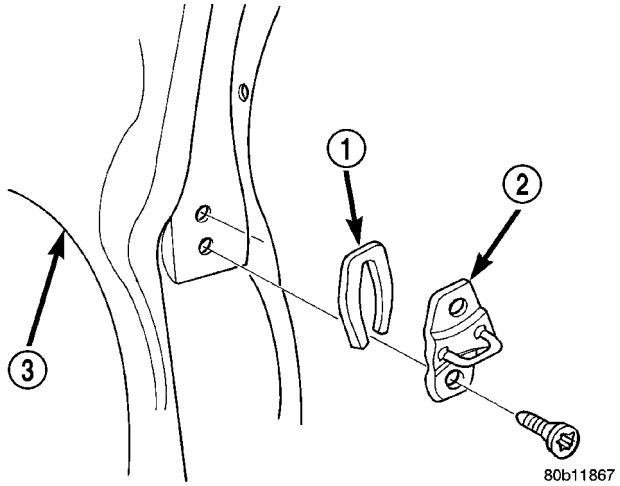

Fig. 8 Rear Door Latch Striker

1 - SHIM
2 - STRIKER
3 - QUARTER PANEL

INSTALLATION

(1) Position door latch striker and any shims on vehicle.

(2) Loosely install screws attaching latch striker to C-pillar.

(3) Align latch striker to marks on C-pillar made previously.

(4) Tighten all fasteners.

(5) Verify door fit and operation. Adjust door latch striker as necessary.

TRIM PANEL

REMOVAL

(1) Open rear door.

(2) Lower window.

(3) Open the screw cap from bottom of arm rest pull cup and remove the screw (Fig. 9).

(4) Open the screw cap from behind door latch handle and remove the screw.

(5) Remove the screws along the bottom of the trim panel.

(6) Using a trim stick C-4755 or equivalent, disengage clips holding perimeter of trim panel to rear door.

(7) Remove trim panel from inner belt weatherstrip at top of door.

(8) Disconnect wiring harness at door opening.

(9) Remove top of trim panel from door.

(10) Disengage clip holding linkage to latch handle (Fig. 10).

(11) Remove linkage from latch handle.

(12) Lift trim up and off lock button.

(13) Remove rear door trim panel from vehicle.

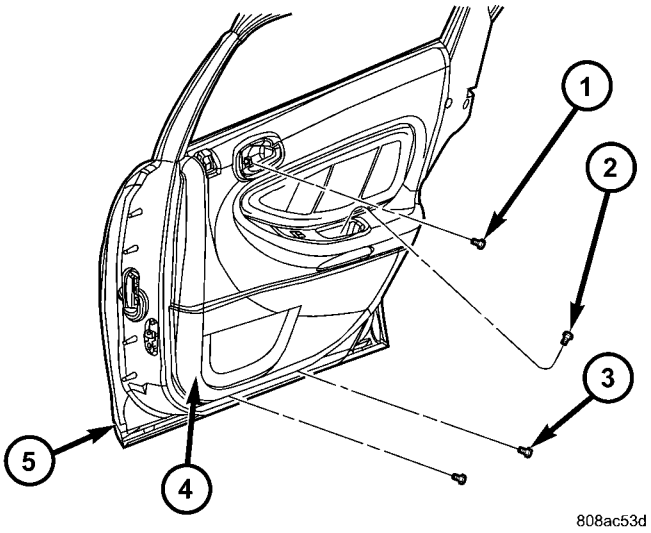

Fig. 9 Rear Door Trim Panel

1 - SCREW
2 - SCREW
3 - SCREW
4 - REAR DOOR TRIM PANEL
5 - REAR DOOR

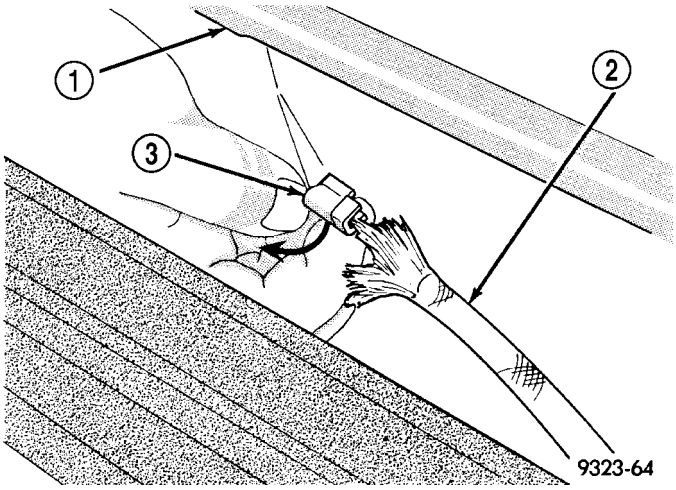

Fig. 10 Linkage Clip

1 - DOOR TRIM PANEL
2 - LATCH RELEASE ROD
3 - CLIP

TRIM PANEL (Continued)

INSTALLATION

(1) Position rear door trim panel on vehicle.
(2) Connect linkage to latch handle.
(3) Engage clip holding linkage to latch handle.
(4) Connect wiring harness at door opening.
(5) Position the lock knob through the trim panel and engage trim panel from inner belt weatherstrip at top of door.
(6) Align the clips attaching perimeter of trim panel to rear door with the grommets and engage.
(7) Install screws attaching door trim panel to door. (Fig. 9)
(8) Install screw holding door latch handle to door and close the screw cap.
(9) Install screw from bottom of arm rest pull cup and close the screw cap.
(10) Connect battery.

WINDOW REGULATOR

REMOVAL

(1) Remove door waterdam. (Refer to 23 - BODY/DOORS - REAR/WATERDAM - REMOVAL)
(2) Remove glass from regulator roller channel. Secure glass in the up position in the door frame.
(3) Disconnect power window motor wire connector, if equipped.
(4) Loosen screw attaching regulator scissor channel to door panel (Fig. 11).
(5) Remove screw and bolt heads from keyhole slots in door panel.
(6) Loosen bolts attaching regulator to door panel.
(7) Remove regulator from door panel.
(8) Slide regulator rearward and rotate forward end of roller channel through access hole in door panel.

INSTALLATION

(1) Position regulator on door panel through access hole in door panel.
(2) Tighten bolts attaching regulator to door panel.

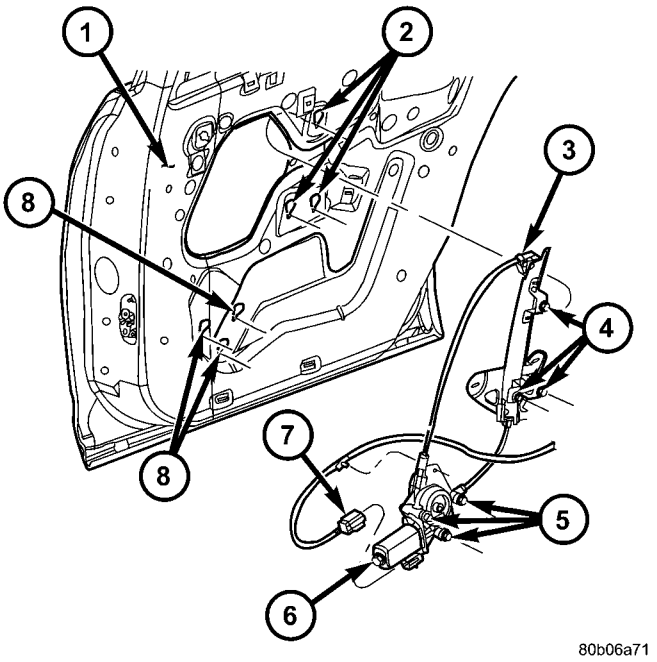

Fig. 11 REAR DOOR REGULATOR

1 - REAR DOOR
2 - MOUNTING SLOTS
3 - REAGULATOR
4 - BOLTS
5 - BOLTS
6 - MOTOR
7 - ELECTRICAL CONNECTOR
8 - MOUNTING SLOTS

(3) Install screw and bolt heads on scissor channel to keyhole slots in door panel.
(4) Tighten screw attaching regulator scissor channel to door panel.
(5) Connect power window motor wire connector, if equipped.
(6) Position glass to regulator roller channel.
(7) Tighten fasteners attaching door glass to roller channel.
(8) Install door waterdam. (Refer to 23 - BODY/DOORS - REAR/WATERDAM - INSTALLATION)

WATERSHIELD

REMOVAL

(1) Remove door trim panel. (Refer to 23 - BODY/DOORS - REAR/TRIM PANEL - REMOVAL)

(2) Remove door speaker, if equipped. (Refer to 8 - ELECTRICAL/AUDIO/SPEAKER - REMOVAL)

CAUTION: Do not use dirty hands or lint type gloves when removing the watershield, adhesive bead will be ruined.

(3) Peel watershield and adhesive away from the door inner panel. Start in one corner, carefully working towards the opposite corner.

(4) Store watershield flat, adhesive side up, covering with wax paper or similar if available to prevent contaminating the adhesive bead.

INSTALLATION

(1) Insure that the adhesive bead is not broken, so the complete perimeter of the door seal will be maintained. Replace any loose/damaged adhesive with butyl sealer or similar. If repair is not possible, replace with a new watershield

(2) Place the watershield into position using the two depressions that locate into the corresponding holes in the door inner panel. (Fig. 38)

(3) Firmly press the adhesive around the perimeter of the door insure complete sealing. Make sure to properly route wiring and linkages.

(4) Install door speaker, if equipped. (Refer to 8 - ELECTRICAL/AUDIO/SPEAKER - INSTALLATION)

(5) Install door trim panel. (Refer to 23 - BODY/DOORS - REAR/TRIM PANEL - INSTALLATION)

EXTERIOR

TABLE OF CONTENTS

page

ACCESSORY DRIVE BELT SPLASH SHIELD
REMOVAL 52
INSTALLATION 52
BATTERY SPLASH SHIELD
REMOVAL 53
INSTALLATION 53
BODY SIDE MOLDINGS
REMOVAL 53
INSTALLATION 53
COWL COVER
REMOVAL 53
INSTALLATION 54
EXTERIOR NAME PLATES
REMOVAL - FOAM TAPE 54
INSTALLATION - FOAM TAPE 54
FRONT FENDER
REMOVAL 54
INSTALLATION 55
FUEL FILL DOOR
REMOVAL 55
INSTALLATION 55
GRILLE
REMOVAL
REMOVAL - JR-41 56
REMOVAL - JR-27 56
INSTALLATION
INSTALLATION 56
INSTALLATION - JR-27 57

page

LEFT FRONT WHEELHOUSE SPLASH SHIELD
REMOVAL 57
INSTALLATION 57
RADIATOR SUPPORT CROSSMEMBER
REMOVAL 57
INSTALLATION 58
REAR WHEELHOUSE SPLASH SHIELD
REMOVAL 58
INSTALLATION 58
RIGHT FRONT WHEELHOUSE SPLASH SHIELD
REMOVAL 58
INSTALLATION 58
SIDE VIEW MIRROR
REMOVAL 59
INSTALLATION 59
SIDE VIEW MIRROR GLASS
REMOVAL 59
INSTALLATION 59
SPOILER
REMOVAL
REMOVAL - JR-41 60
REMOVAL - JR-27 60
INSTALLATION
INSTALLATION - JR-41 61
INSTALLATION - JR-27 61
TAPE STRIPE
REMOVAL - ADHESIVES 61
INSTALLATION - ADHESIVES 61

ACCESSORY DRIVE BELT SPLASH SHIELD

REMOVAL

(1) Remove the right front wheelhouse splash shield. (Refer to 23 - BODY/EXTERIOR/RIGHT FRONT WHEELHOUSE SPLASH SHIELD - REMOVAL)

(2) Remove the six push-in fasteners attaching accessory drive belt splash shield to frame rail (Fig. 1).

(3) Remove accessory drive belt splash shield from vehicle.

INSTALLATION

(1) Install splash shield and install the six push-in fasteners attaching accessory drive belt splash shield to frame rail.

(2) Install the right front wheelhouse splash shield. (Refer to 23 - BODY/EXTERIOR/RF WHEELHOUSE SPLASH SHIELD - INSTALLATION)

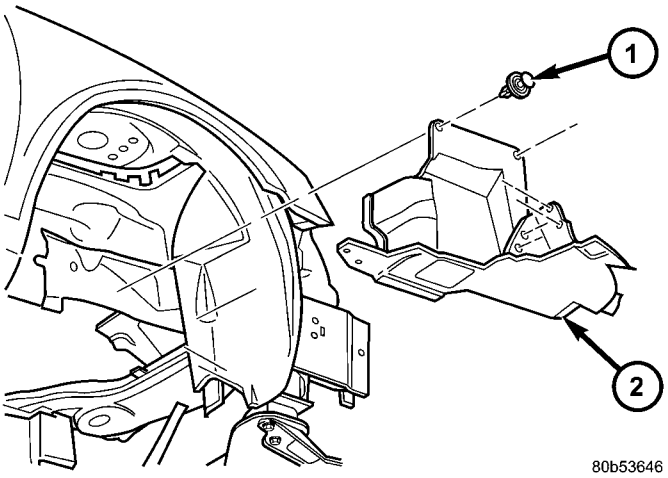

Fig. 1 ACCESSORY DRIVE BELT SPLASH SHIELD

1 - PUSH-PIN FASTENERS
2 - SPLASH SHIELD

BATTERY SPLASH SHIELD

REMOVAL

(1) Remove the three push-pin fasteners and remove the splash shield (Fig. 2).

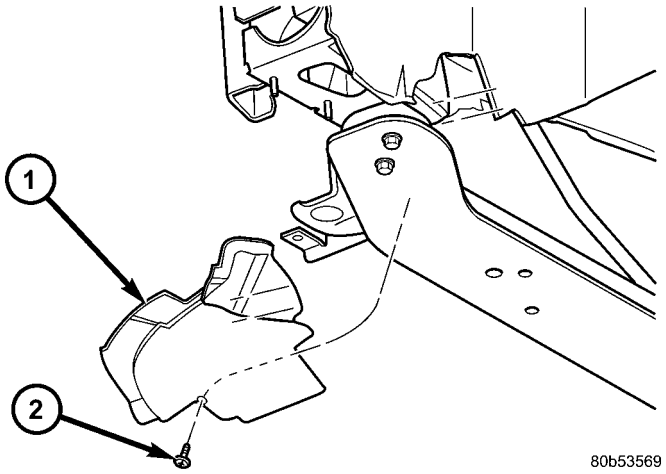

Fig. 2 BATTERY SPLASH SHIELD

1 - SPLASH SHIELD
2 - PUSH-PIN FASTENERS

INSTALLATION

(1) Install the splash shield and install the 3 push-pin fasteners.

BODY SIDE MOLDINGS

REMOVAL

(1) Warm the affected body side molding and body metal to approximately 38° C (100° F) using a suitable heat lamp or heat gun.

(2) Pull body side molding from vehicle (Fig. 3).

(3) Remove adhesive tape residue from surface of vehicle.

INSTALLATION

(1) If molding is to be reused, remove tape residue from molding. Clean back of molding with Mopar® Super Kleen solvent or equivalent. Wipe molding dry with lint free cloth. Apply new body side molding (two sided adhesive) tape to back of molding.

(2) 2Clean body surface with Mopar® Super Kleen solvent or equivalent. Wipe surface dry with a lint free cloth.

(3) Apply a length of masking tape on the body parallel to the top edge of the molding to use as a guide, if necessary.

(4) Remove protective cover from tape on back of molding. Apply molding to body below the masking tape guide.

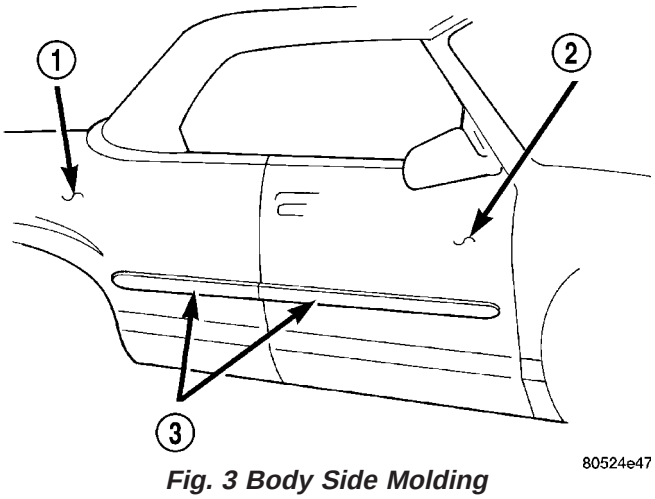

Fig. 3 Body Side Molding

1 - QUARTER PANEL
2 - DOOR
3 - BODYSIDE MOLDING

(5) Remove masking tape guide. Heat body metal and body side molding to approximately 38° C (100° F) using a suitable heat lamp or heat gun.

(6) Firmly press body side molding to body surface to insure adhesion.

COWL COVER

REMOVAL

(1) Release hood latch and open hood.

(2) Remove windshield wiper arms(Refer to 8 - ELECTRICAL/WIPERS/WASHERS/WIPER ARMS - REMOVAL).

(3) Remove screws attaching cowl cover to cowl (Fig. 4).

(4) Remove the seal, cowl screen to hood inner panel.

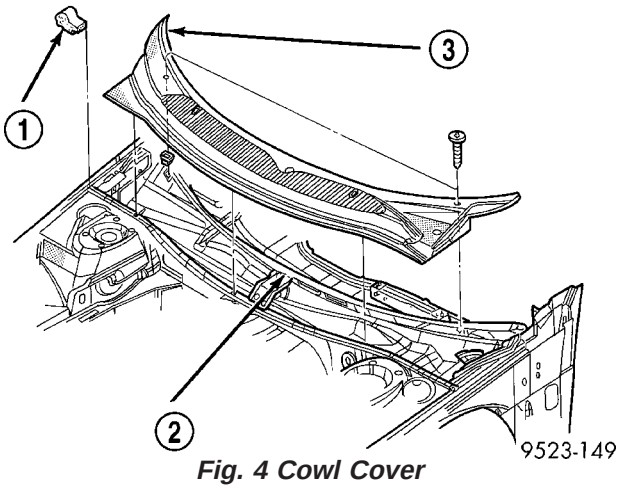

Fig. 4 Cowl Cover

1 - SEAL
2 - COWL
3 - COWL COVER

COWL COVER (Continued)

(5) Remove clips attaching cowl cover to cowl plenum under hood to cowl bulb seal.
(6) Remove cowl cover from vehicle.

INSTALLATION

(1) Position cowl cover to vehicle.
(2) Install clips attaching cowl cover to cowl plenum.
(3) Install the seal, cowl screen to hood inner panel.
(4) Install screws attaching cowl cover to cowl.
(5) Install windshield wiper arms (Refer to 8 - ELECTRICAL/WIPERS/WASHERS/WIPER ARMS - INSTALLATION).

EXTERIOR NAME PLATES

REMOVAL - FOAM TAPE

(1) Mark reference points before removing.
(2) Using a heat gun gently apply heat in a circular motion to loosen the adhesive bond.
(3) Using a trim stick C 4755 or equivalent, gently pry up at corners and remove.
(4) Clean off all traces of adhesive or double sided tape from the panel with a general purpose adhesive remover.

INSTALLATION - FOAM TAPE

(1) Clean panel surface with isopropyl alcohol.
(2) Align badging to reference points.
(3) Install and press securely to full adhesive contact
(4) Clean away any reference points.

FRONT FENDER

REMOVAL

(1) Remove headlamp housing.
(2) Remove mud guard.
(3) Remove inner splash shield.
(4) Remove fender to fascia bolt (Fig. 5) or (Fig. 6).
(5) Remove fender bolt to lower rocker panel.
(6) Remove fender bolt to lower cowl.
(7) Pull fascia away from fender.
(8) Remove bolts attaching fender to upper rail.
(9) Remove fender from vehicle.

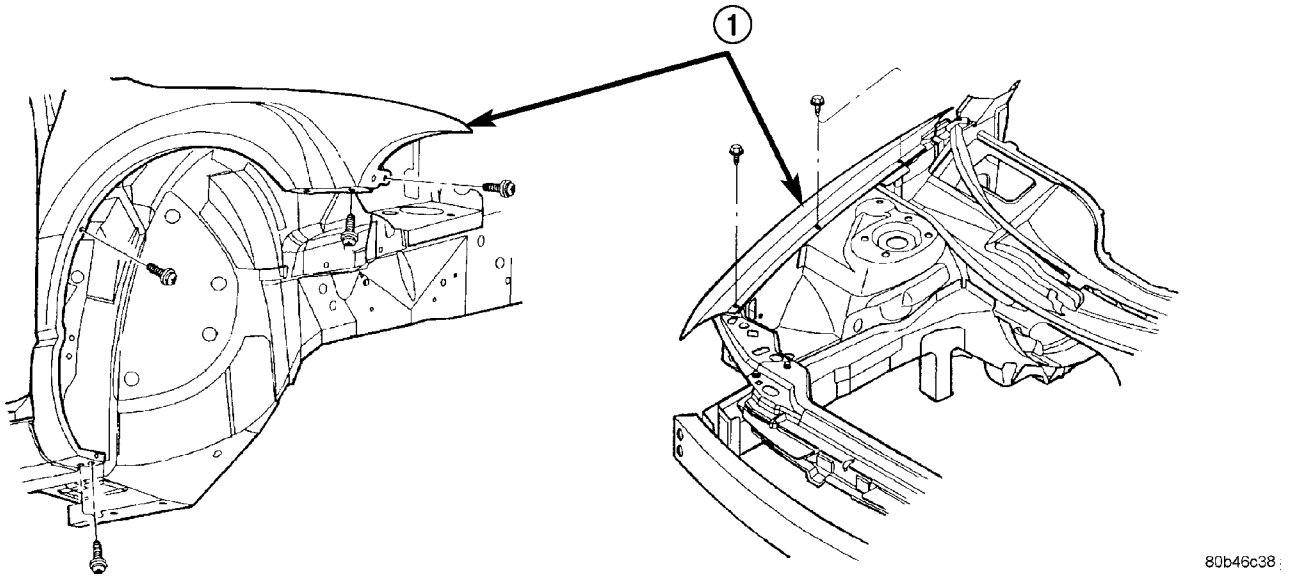

Fig. 5 RIGHT FENDER

1 - FRONT FENDER

FRONT FENDER (Continued)

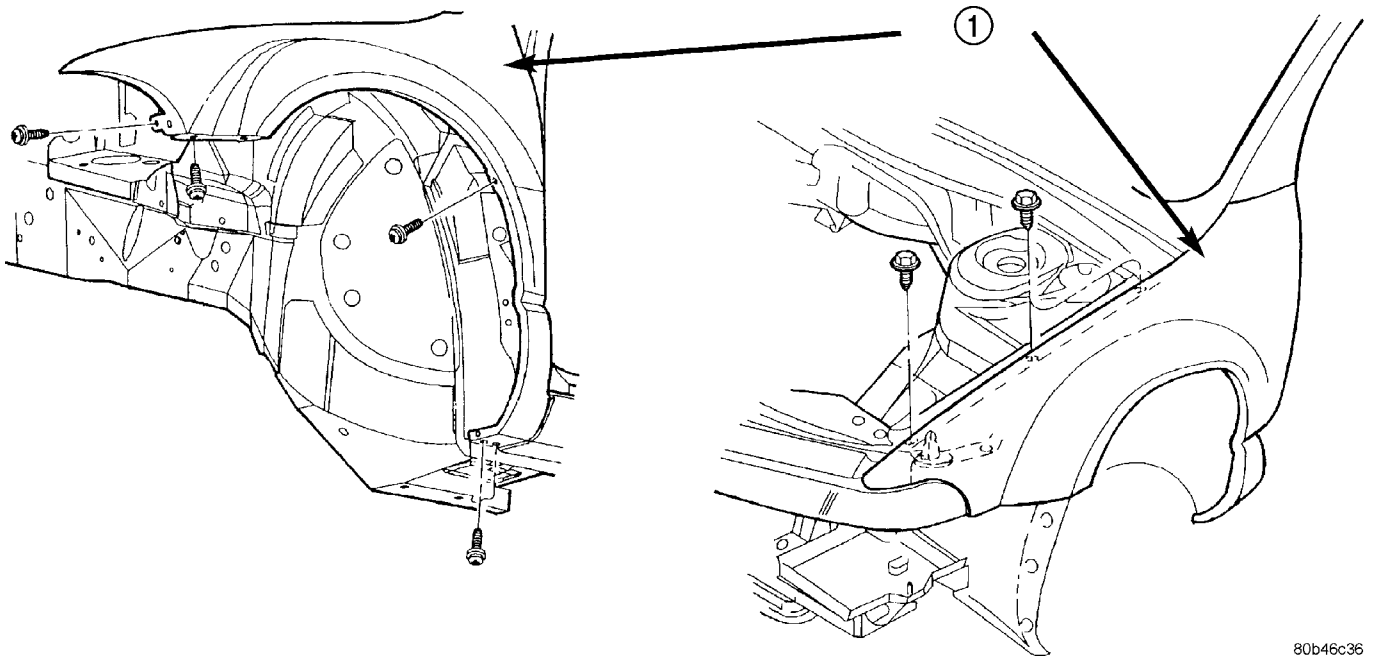

Fig. 6 LEFT FENDER

1 - FENDER

INSTALLATION

(1) Place fender in position on vehicle.
(2) Start the center upper rail bolt (Fig. 5) or (Fig. 6).
(3) From inside engine compartment, start the center upper rail bolt. Install all the bolts attaching fender to upper rail and tighten.
(4) Install fender to lower cowl panel bolt.
(5) Install fender to rocker panel bolt.
(6) Place fascia into position.
(7) Install fender to fascia bolt.
(8) Install inner splash shield.
(9) Install mud guard.
(10) Install headlamp assembly.
(11) Check fender for flush and gap.

FUEL FILL DOOR

REMOVAL

(1) Open fuel filler door.
(2) Remove the two torx screws (Fig. 7).
(3) Remove fuel filler door from vehicle.

INSTALLATION

(1) Place fuel filler door into position.
(2) Install the two torx screws.
(3) Ensure that door operates properly.

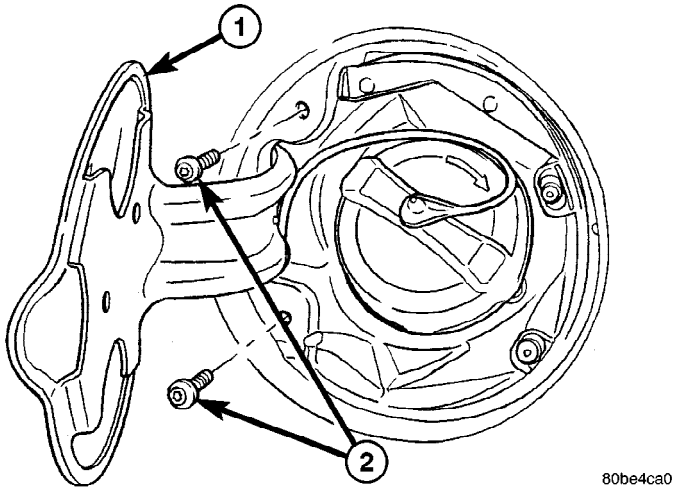

Fig. 7 Fuel Filler Door

1 - FUEL FILLER DOOR
2 - TORX SCREWS

GRILLE

REMOVAL

REMOVAL - JR-41

(1) Remove front bumper fascia from the vehicle (Refer to 13 - FRAMES & BUMPERS/BUMPERS/ FRONT FASCIA - REMOVAL).

(2) Unsnap upper and lower grille surround(s). Using a trim stick if necessary (Fig. 8).

(3) Remove screws attaching grille.

(4) Remove grille from fascia.

REMOVAL - JR-27

(1) Remove front bumper fascia, (Refer to 13 - FRAMES & BUMPERS/BUMPERS/FRONT FASCIA - REMOVAL).

(2) Remove fascia from the vehicle.

(3) Remove foam impact bar from fascia.

(4) Remove clips attaching grille (Fig. 9).

(5) Remove grille from fascia.

(6) Transfer medallion.

(7) Remove grille from fascia.

INSTALLATION

INSTALLATION

(1) Position grille on fascia.

(2) Install screw(s) attaching grille to fascia (Fig. 8).

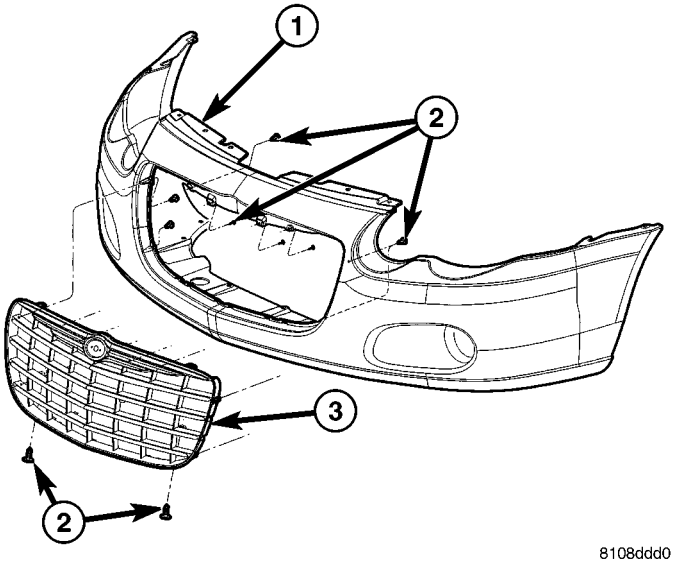

Fig. 9 FRONT GRILLE - JR-27

1 - FRONT FASCIA
2 - ATTACHING SCREWS
3 - FRONT GRILLE

(3) Press into position the upper and lower grille surround(s).

(4) Place fascia into position.

(5) Install front bumper fascia, (Refer to 13 - FRAMES & BUMPERS/BUMPERS/FRONT FASCIA - INSTALLATION).

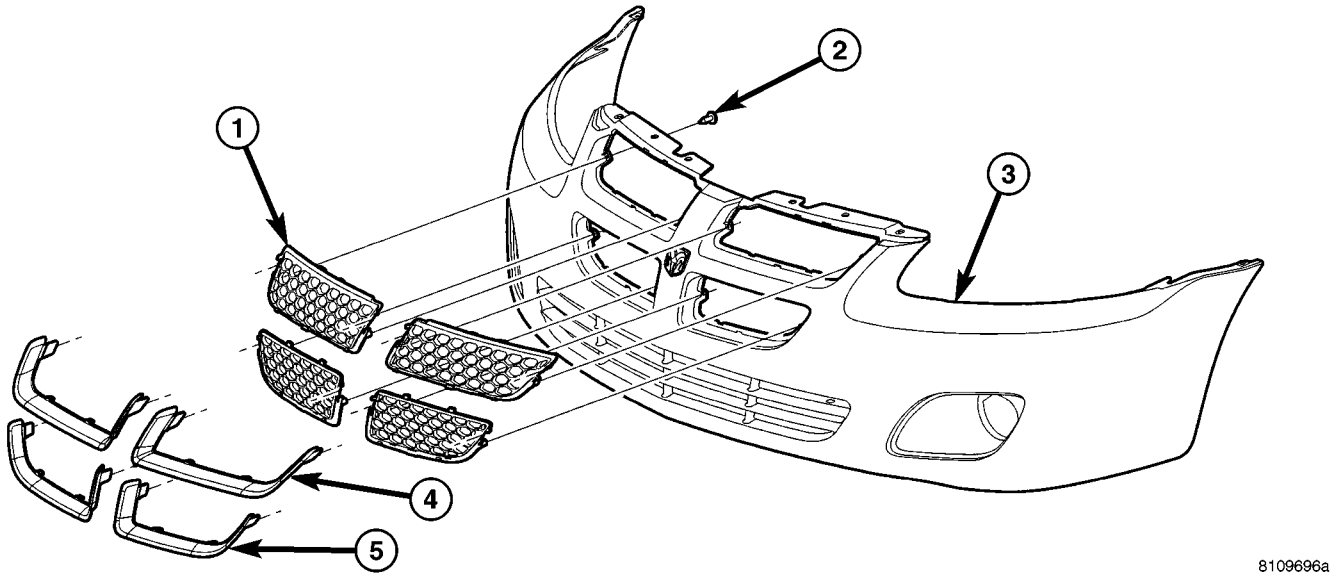

Fig. 8 FRONT GRILLE - JR-41

1 - GRILLE (4)
2 - ATTACHING SCREW(S)
3 - FRONT FASCIA
4 - UPPER GRILLE SURROUND
5 - LOWER GRILLE SURROUND

GRILLE (Continued)

INSTALLATION - JR-27

(1) Position grille on fascia.
(2) Install screws attaching grille to fascia (Fig. 9).
(3) Install foam impact bar to fascia.
(4) Place fascia into position.
(5) Install front bumper fascia, (Refer to 13 - FRAMES & BUMPERS/BUMPERS/FRONT FASCIA - INSTALLATION).

LEFT FRONT WHEELHOUSE SPLASH SHIELD

REMOVAL

(1) Remove left front wheel. (Refer to 22 - TIRES/WHEELS - REMOVAL)
(2) Remove the seven push pin fasteners, the three screws, and remove the transmission splash shield (Fig. 11).
(3) Remove the fender trim (Fig. 10).
(4) Remove the four push pin fasteners and remove the wheelhouse splash shield (Fig. 12).

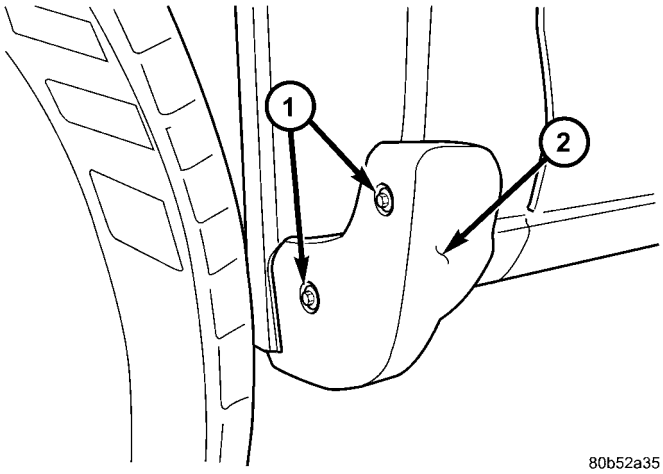

Fig. 10 FENDER TRIM – TYPICAL

1 - SCREWS
2 - FENDER TRIM

INSTALLATION

(1) Install the wheelhouse splash shield and install the 4 push pin fasteners.
(2) Install the transmission splash shield, the seven push pin fasteners, and the three screws..
(3) Install the fender trim and the trim screws.
(4) Install the wheel assembly. (Refer to 22 - TIRES/WHEELS - INSTALLATION)

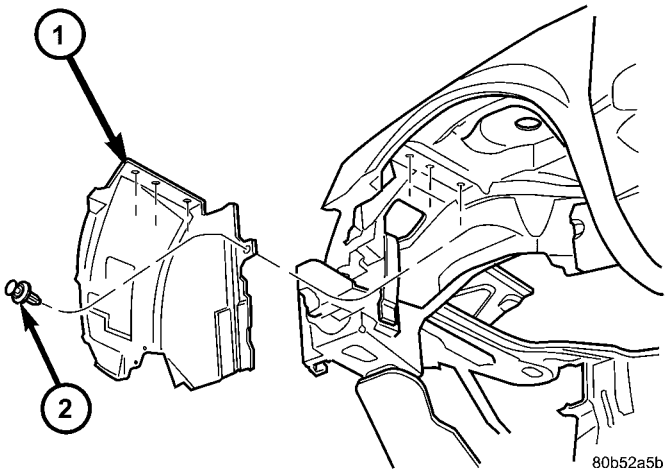

Fig. 11 TRANSMISSION SPLASH SHIELD

1 - SPLASH SHIELD
2 - PUSH PIN FASTENERS

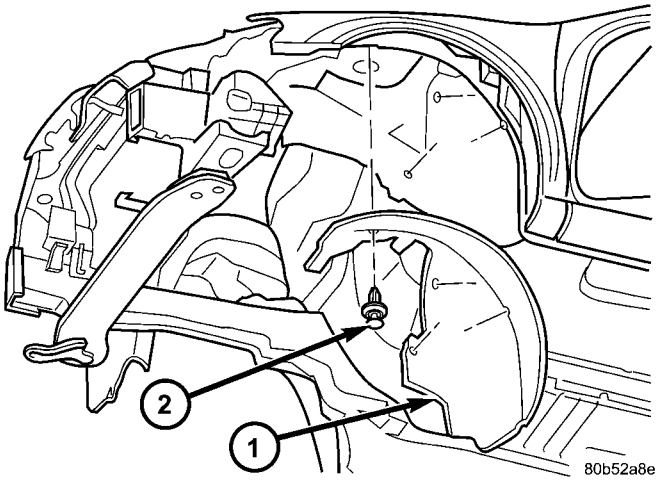

Fig. 12 WHEELHOUSE SPLASH SHIELD

1 - WHEELHOUSE SPLASH SHIELD
2 - PUSH PIN FASTENERS

RADIATOR SUPPORT CROSSMEMBER

REMOVAL

(1) Release hood latch and open hood.
(2) Remove push-in fasteners attaching fascia/grille to radiator support crossmember.
(3) Remove bolts attaching support braces to bottom of radiator support crossmember.
(4) Remove bolts attaching crossmember to radiator closure panel.
(5) Remove nuts attaching hood latch to radiator support crossmember.
(6) Remove radiator support crossmember from vehicle.

RADIATOR SUPPORT CROSSMEMBER (Continued)

INSTALLATION

(1) Install radiator support crossmember to vehicle.

(2) Install nuts attaching hood latch to radiator support crossmember.

(3) Install bolts attaching crossmember to radiator closure panel.

(4) Install bolts attaching support braces to bottom of radiator support crossmember.

(5) Install push-in fasteners attaching fascia/grille to radiator support crossmember.

(6) Close hood.

REAR WHEELHOUSE SPLASH SHIELD

REMOVAL

(1) Remove the wheel. (Refer to 22 - TIRES/WHEELS - REMOVAL)

(2) Remove the six push pin fasteners, two screws and remove the wheelhouse splash shield (Fig. 13).

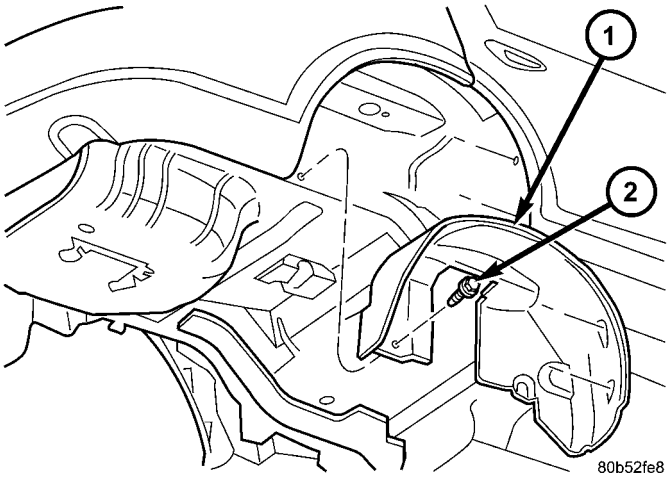

Fig. 13 WHEELHOUSE SPLASH SHIELD

1 - SPLASH SHIELD
2 - PUSH PIN FASTENERS

INSTALLATION

(1) Position the splash shield and install the six push pin fasteners and two screws.

(2) Install the wheel. (Refer to 22 - TIRES/WHEELS - INSTALLATION)

RIGHT FRONT WHEELHOUSE SPLASH SHIELD

REMOVAL

(1) Remove the screws and remove the fender trim (Fig. 10).

(2) Remove right front wheel. (Refer to 22 - TIRES/WHEELS - REMOVAL)

(3) Remove the eight push pin fasteners, two screws and remove the splash shield. (Fig. 14).

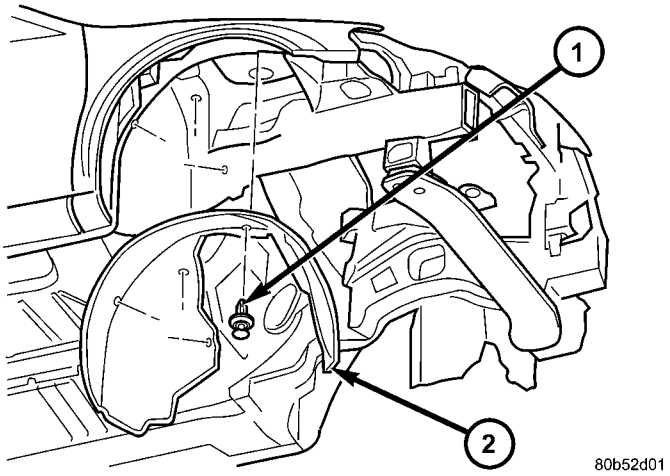

Fig. 14 SPLASH SHIELD

1 - PUSH PIN FASTENERS
2 - SPLASH SHIELD

INSTALLATION

(1) Install the wheelhouse splash shield and install the eight push pin fasteners and two screws.

(2) Install the wheel assembly. (Refer to 22 - TIRES/WHEELS - INSTALLATION)

SIDE VIEW MIRROR

REMOVAL

(1) Remove side view mirror cover (Fig. 15).

(2) Remove the door trim panel (Refer to 23 - BODY/DOOR - FRONT/TRIM PANEL - REMOVAL).

(3) Disconnect power window mirror motor wire connector, if so equipped.

(4) Disengage wire harness grommet from mirror flag, if so equipped.

(5) Disconnect manual mirror adjuster from side mirror cover, if so equipped.

(6) Remove nuts attaching side view mirror to mirror flag (Fig. 16).

(7) Remove side view mirror from vehicle.

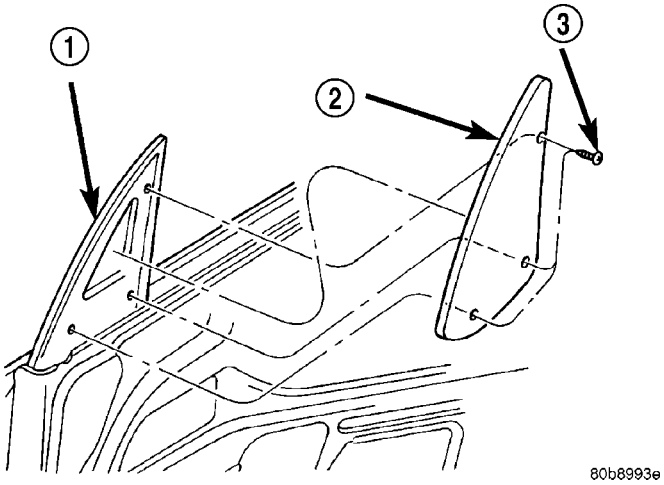

Fig. 15 Side View Mirror Cover

1 - MIRROR FLAG
2 - SIDE VIEW MIRROR COVER
3 - FASTENERS

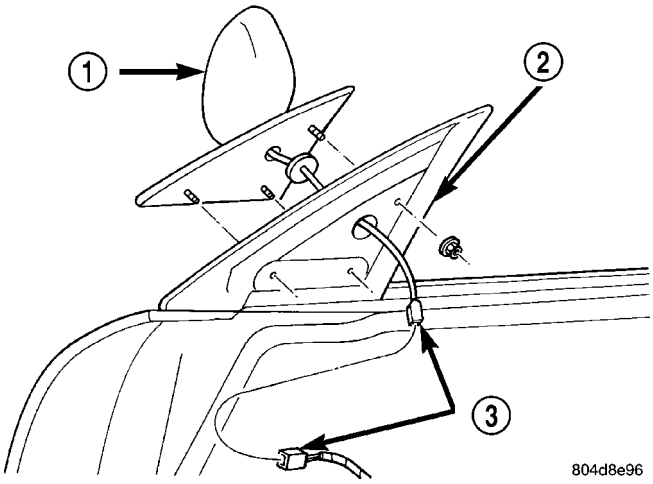

Fig. 16 Side View Mirror

1 - SIDE VIEW MIRROR
2 - MIRROR FLAG/GLASS CHANNEL
3 - WIRE CONNECTOR

INSTALLATION

(1) Feed power mirror wire harness through hole in mirror flag and seat grommet. Do not pull on wire harness to seat grommet, if so equipped.

(2) Route adjuster cables through hole in mirror flag, grommet. Do not pull on cables to seat grommet.

(3) Position side view mirror to vehicle.

(4) Install nuts attaching side view mirror to mirror flag.

(5) Engage push in fastener attaching power mirror wire connector to inner door panel, if so equipped.

(6) Engage power mirror motor wire connector.

(7) Install door trim panel (Refer to 23 - BODY/DOOR - FRONT/TRIM PANEL - INSTALLATION).

(8) Connect cables to adjuster on side view mirror cover.

(9) Install side view mirror cover.

SIDE VIEW MIRROR GLASS

REMOVAL

WARNING: ALWAYS WEAR EYE AND HAND PROTECTION WHEN SERVICING THE MIRROR ASSEMBLY. FAILURE TO OBSERVE THESE WARNINGS MAY RESULT IN PERSONAL INJURY FROM BROKEN GLASS.

(1) Carefully pull/pry the broken glass holder from the mirror assembly.

(2) Disconnect the heated mirror electrical connectors from the terminals on the mirror glass holder, if equipped.

INSTALLATION

CAUTION: It is important to make sure the motor is square to the glass holder (attaching fingers) prior to glass holder attachment, otherwise the glass holder could be installed incorrectly causing poor retention and possible repeat failure.

(1) Position the new mirror glass holder to the mirror assembly.

NOTE: Position the mirror glass holder so that the moisture drain hole on the mirror glass holder assembly is facing downward.

(2) Align the mirror glass holder's attaching fingers to the mirror motor housing.

NOTE: Ensure that the protective rubber cover of the mirror motor housing is positioned correctly around the bottom of the fingers area.

SIDE VIEW MIRROR GLASS (Continued)

(3) Using one hand, firmly press the mirror glass holder assembly into place while at the same time supporting the housing assembly from the backside with the other hand.

NOTE: Pressure must be applied equally over the center portion of the mirror to engage the mirror glass holder's attaching fingers to the corresponding fingers on the housing assembly. One or more clicks may be heard when finger engagement takes place.

(4) Verify retention of the mirror glass holder assembly by gently pulling outward on the mirror glass holder.

SPOILER

REMOVAL

REMOVAL - JR-41

(1) Remove the decklid cover if necessary. (Refer to 23 - BODY/DECKLID/HATCH/LIFTGATE/TAILGATE/COVER - REMOVAL)

(2) Remove the four nuts and remove the spoiler (Fig. 17).

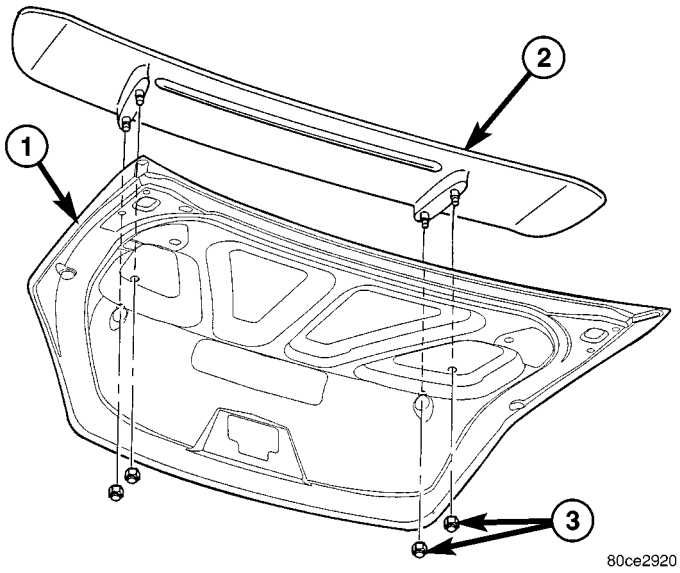

Fig. 17 SPOILER - JR-41

1 - DECKLID
2 - SPOILER
3 - NUTS

REMOVAL - JR-27

(1) Remove the decklid cover if necessary. (Refer to 23 - BODY/DECKLID/HATCH/LIFTGATE/TAILGATE/COVER - REMOVAL)

(2) Remove the three nuts (Fig. 18).

(3) Using a trim strick or a suitable tool release the double sided tape attaching spoiler to the decklid (Fig. 19).

(4) Raising the rear edge of spoiler so the studs clear the decklid and remove the spoiler.

(5) Clean area by remove all of the double sided tape and thoroughty clean the area with MOPAR® Super Kleen, or equivalent.

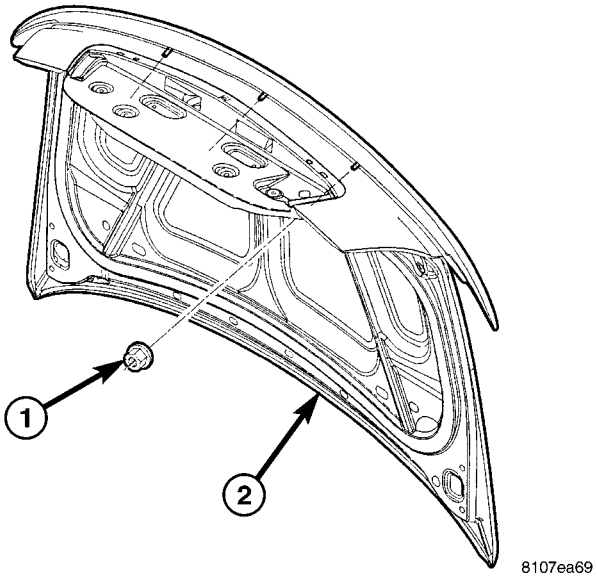

Fig. 18 SPOILER ATTACHING NUTS

1 - ATTACHING NUT (S)
2 - DECKLID

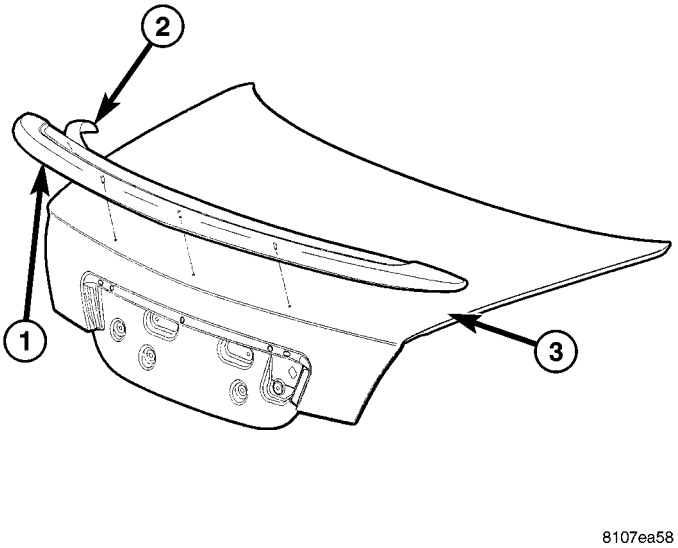

Fig. 19 SPOILER

1 - SPOILER ASSEMBLY
2 - DOUBLE BACK TAPE
3 - DECK LID

SPOILER (Continued)

INSTALLATION

INSTALLATION - JR-41

(1) Install the spoiler and nuts (Fig. 17).
(2) Tighten nuts to 3 N·m (30 in. lbs.) torque.
(3) Install the decklid cover. (Refer to 23 - BODY/DECKLID/HATCH/LIFTGATE/TAILGATE/COVER - INSTALLATION)

INSTALLATION - JR-27

(1) Clean the area of the decklid and spoiler that is to be bonded, with an alcohol based cleaner.
(2) Install double sided tape to the spoiler if necessary.
(3) Peel the backing from tape on the bottom side of spoiler (Fig. 19).
(4) Position spoiler on the decklid aligning studs to holes and spoiler into position.
(5) Press firmly on the leading edge of spoiler to assure adhesion.
(6) Raise decklid and install nuts attaching spoiler to the decklid. Tighten nuts to 5 N·m (45 in. lbs.) torque (Fig. 18).
(7) Close decklid.

TAPE STRIPE

REMOVAL - ADHESIVES

(1) Mark reference points before removing.
(2) Using a heat gun gently apply heat in a circular motion to loosen the adhesive bond.
(3) Using the trim stick C 4755 or equivalent, lift up and peel away badging /tape from panel, using a heat gun as you go.
(4) Clean off all traces of adhesive from the panel(s) with a general purpose adhesive remover.

INSTALLATION - ADHESIVES

(1) Clean panel surface with isopropyl alcohol.
(2) Remove paper carrier and align badging/tape to reference points or adjacent panel.
(3) Install and press securely, using a plastic spreader to eliminate all air bubbles.
(4) Remove top protective carrier.
(5) Clean away any reference points.

HOOD

TABLE OF CONTENTS

	page
ADJUSTER BUMPER	
REMOVAL	62
INSTALLATION	62
HINGE	
REMOVAL	63
INSTALLATION	63
HOOD	
REMOVAL	63
INSTALLATION	63
LATCH	
REMOVAL	63
INSTALLATION	64
LATCH RELEASE CABLE	
REMOVAL	64
INSTALLATION	64
PROP ROD	
REMOVAL	65
INSTALLATION	65

ADJUSTER BUMPER

REMOVAL

(1) Release hood latch and open hood.

(2) Rotate hood adjuster bumper counterclockwise.

(3) Remove hood adjuster bumper from headlamp reinforcement (Fig. 1).

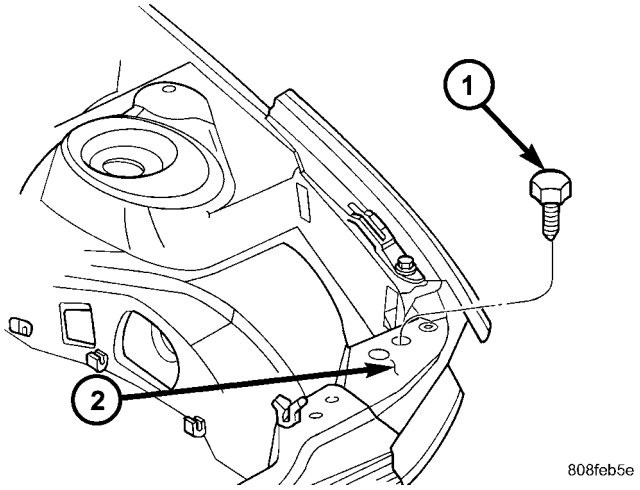

Fig. 1 HOOD ADJUSTER BUMPER

1 - HOOD ADJUSTER BUMPER
2 - HEADLAMP REINFORCEMENT

INSTALLATION

(1) Ensure that hood overslam bumpers proper position (Fig. 2).

(2) Start hood adjuster bumper into headlamp reinforcement (Fig. 1).

(3) Rotate hood adjuster bumper clockwise. Adjust hood adjuster bumper to achieve a hood height that is flush across the top surfaces along fenders.

(4) Close hood.

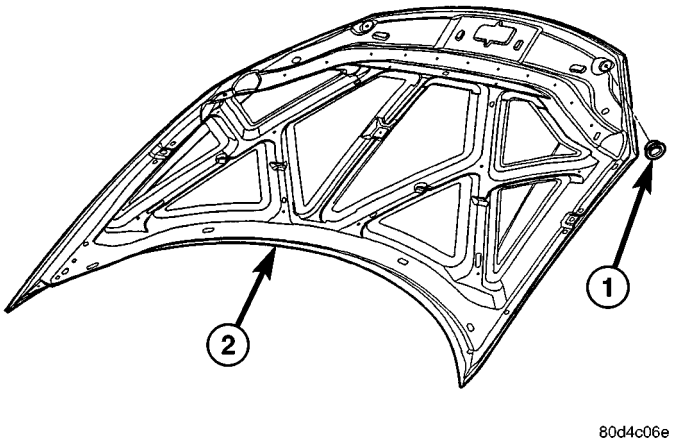

Fig. 2 HOOD OVERSLAM BUMPER

1 - OVERSLAM BUMPER
2 - HOOD

HINGE

REMOVAL

(1) Support hood on the side that requires hinge replacement.

(2) Mark hinge attachment locations with a grease pencil or other suitable device to aid installation.

(3) Remove cowl cover(Refer to 23 - BODY/EXTERIOR/COWL GRILLE - REMOVAL).

(4) Remove bolts attaching hood to hinge.

(5) Remove bolts attaching hood hinge to load beam inner and remove hinge from vehicle.

INSTALLATION

(1) If necessary, paint new hinge before installation.

(2) Place hinge in position on vehicle.

(3) Install bolts to attach hood hinge to load beam inner.

(4) Install bolts to attach hood to hinge.

(5) Align all marks and secure bolts.

(6) Tighten bolts to 28 N·m (20 ft. lbs.) torque.

(7) The hood should be aligned to 4 mm (0.160 in.) gap to the front fenders and flush across the top surfaces along fenders. Shims can be added or removed under hood hinge to achieve proper hood height.

(8) Install cowl cover(Refer to 23 - BODY/EXTERIOR/COWL GRILLE - INSTALLATION).

(9) Verify hood latch operation. Adjust as necessary.

HOOD

REMOVAL

(1) Open hood.

(2) Mark outline of hinges on inside of hood to aid installation.

(3) Remove the top bolts attaching hood to hinge and loosen the bottom bolts until they can be removed by hand.

(4) With assistance from a helper at the opposite side of the vehicle to support the hood, remove bottom bolts attaching hood to hinge.

(5) Remove the hood from the vehicle.

INSTALLATION

(1) With assistance from a helper, place hood in position on vehicle.

(2) Install bottom bolts to attach hood to hinge finger tight.

(3) Install top bolts to attach hood to hinge finger tight.

(4) Position bolts at outline marks and tighten bolts. The hood should be aligned to 4 mm (0.160 in.) gap to the front fenders and flush across the top surfaces along fenders.

(5) Connect under hood lamp wire connector to engine compartment wire harness, if equipped.

(6) Verify hood latch operation and alignment. Adjust as necessary.

LATCH

REMOVAL

(1) Release hood latch and open hood.

(2) Support hood on prop rod.

(3) Mark outline of hood latch on radiator support crossmember with a grease pencil or other suitable device to aid installation.

(4) Remove nuts attaching hood latch to upper radiator support crossmember (Fig. 3).

(5) Remove hood latch from vehicle.

(6) Disengage remote release cable from hood latch (Fig. 4).

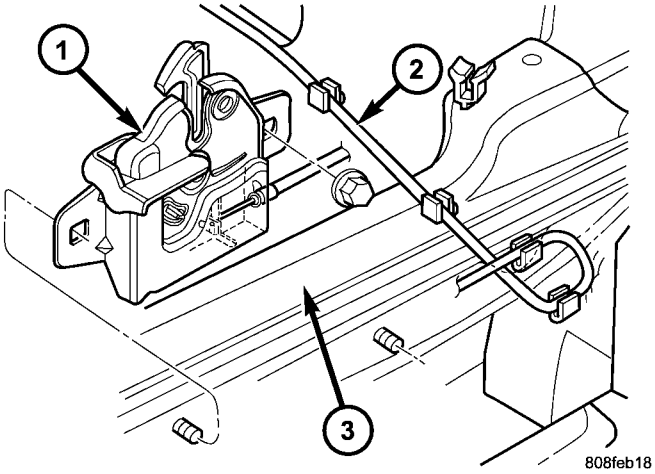

Fig. 3 HOOD LATCH

1 - HOOD LATCH
2 - HOOD RELEASE CABLE
3 - RADIATOR SUPPORT CROSSMEMBER

LATCH (Continued)

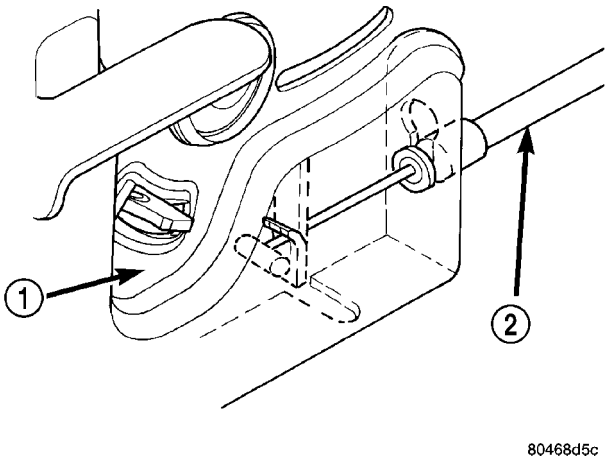

Fig. 4 HOOD LATCH RELEASE CABLE

1 - HOOD LATCH
2 - HOOD RELEASE CABLE

INSTALLATION

(1) Engage remote release cable into hood latch (Fig. 4).

(2) Position hood latch on vehicle.

(3) Install nuts attaching hood latch onto upper radiator support crossmember.

(4) Tighten nut to 28 N·m (20 ft. lbs.) torque.

(5) Verify operation. Adjust as necessary.

LATCH RELEASE CABLE

REMOVAL

(1) Remove hood latch(Refer to 23 - BODY/HOOD/ LATCH - REMOVAL).

(2) Remove left front cowl trim panel.

(3) Remove screws attaching hood release handle to inner cowl panel (Fig. 5).

(4) Release clips attaching hood release cable to left inner frame rail (Fig. 6).

(5) Disengage rubber grommet at lower dash panel.

(6) Disengage push-in fastener attaching hood release cable to dash panel.

(7) Remove hood release cable from vehicle.

INSTALLATION

(1) Route hood release cable through hole in lower dash panel and along inner frame rail.

(2) Engage rubber grommet to lower dash panel.

(3) Engage push-in fastener attaching hood release cable to lower dash panel.

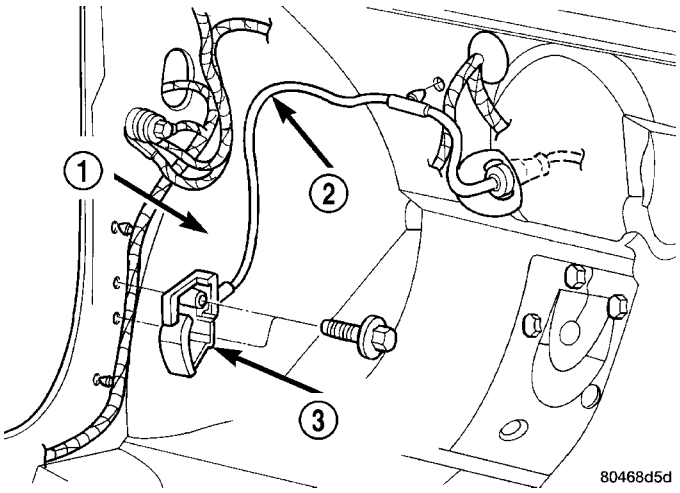

Fig. 5 Hood Release Cable Handle

1 - COWL PANEL
2 - HOOD RELEASE CABLE
3 - HOOD RELEASE HANDLE

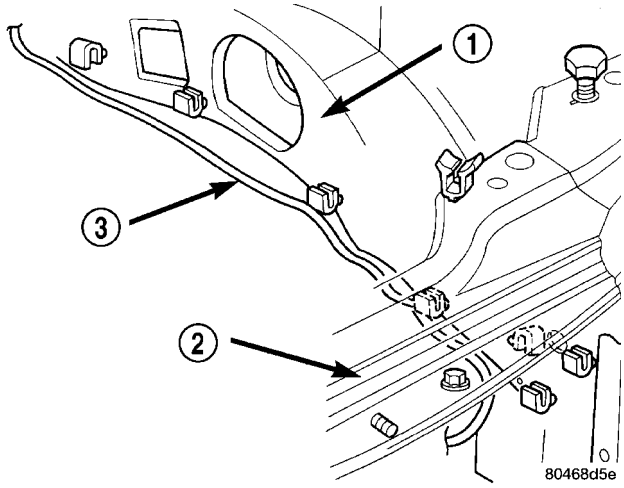

Fig. 6 Hood Release Cable Routing

1 - FRAME RAIL
2 - UPPER RADIATOR SUPPORT CROSSMEMBER
3 - HOOD RELEASE CABLE

(4) Install screws attaching hood release cable handle to inner cowl panel.

(5) Tighten screws to 1.8 N·m (16 in. lbs.) torque.

(6) Install left front cowl trim panel.

(7) Engage hood release cable into clips along inner frame rail (Fig. 6).

(8) Install hood latch(Refer to 23 - BODY/HOOD/ LATCH - INSTALLATION).

PROP ROD

REMOVAL

(1) Release hood latch and open hood.

CAUTION: Do not place prop-rod or substitute against outer hood panel, damage to exterior finish will result.

(2) Prop hood open using a length of wooden dowel rod, ex (Broomstick).

(3) Disengage prop-rod from retainer attaching prop-rod to radiator closure panel (Fig. 7).

(4) Remove prop-rod from vehicle.

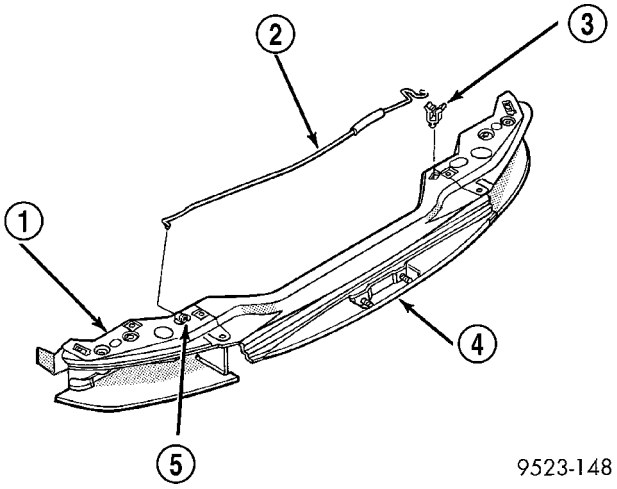

Fig. 7 Hood Prop Rod

1 - RADIATOR CLOSURE PANEL
2 - HOOD PROP-ROD
3 - CLIP
4 - RADIATOR SUPPORT CROSSMEMBER
5 - RETAINER

INSTALLATION

CAUTION: Do not place prop-rod or substitute against outer hood panel, damage to exterior finish will result.

(1) Place prop-rod into position.

(2) Engage prop-rod from retainer attaching prop-rod to radiator closure panel.

(3) Remove temporary hood prop rod.

(4) Close hood.

INSTRUMENT PANEL

TABLE OF CONTENTS

page

CD CHANGER TRIM BEZEL
REMOVAL 66
INSTALLATION 66
GLOVE BOX
REMOVAL 66
INSTALLATION 67
GLOVE BOX LATCH
REMOVAL 67
INSTALLATION 67
INSTRUMENT PANEL ASSEMBLY
REMOVAL 67
INSTALLATION 68
INSTRUMENT PANEL CENTER BEZEL
REMOVAL 70
INSTALLATION 70
INSTRUMENT PANEL CLUSTER BEZEL
REMOVAL 70
INSTALLATION 70
INSTRUMENT PANEL END COVER
REMOVAL 71
INSTALLATION 71
INSTRUMENT PANEL INBOARD BEZEL
REMOVAL 72
INSTALLATION 72
INSTRUMENT PANEL OUTBOARD BEZEL
REMOVAL 72
INSTALLATION 72
INSTRUMENT PANEL TOP COVER
REMOVAL 73
INSTALLATION 73
LEFT LOWER INSTRUMENT PANEL TRIM
REMOVAL 73
INSTALLATION 73
LEFT LOWER INSTRUMENT SILENCER PANEL
REMOVAL 74
INSTALLATION 74
RIGHT LOWER SILENCER PANEL
REMOVAL 74
INSTALLATION 74
RIGHT INSTRUMENT PANEL TRIM BEZEL
REMOVAL 75
INSTALLATION 75
RIGHT LOWER INSTRUMENT PANEL TRIM
REMOVAL 75
INSTALLATION 75
KICK SHIELD
REMOVAL 76
INSTALLATION 76
DASH PANEL
REMOVAL 76
INSTALLATION 77

CD CHANGER TRIM BEZEL

REMOVAL

(1) Using a trim stick (special tool #C-4755) or equivalent, gently pry out on the CD changer trim bezel and remove from the vehicle (Fig. 1).

INSTALLATION

(1) Position CD changer trim bezel over the retaining slots and firmly snap into place (Fig. 1).

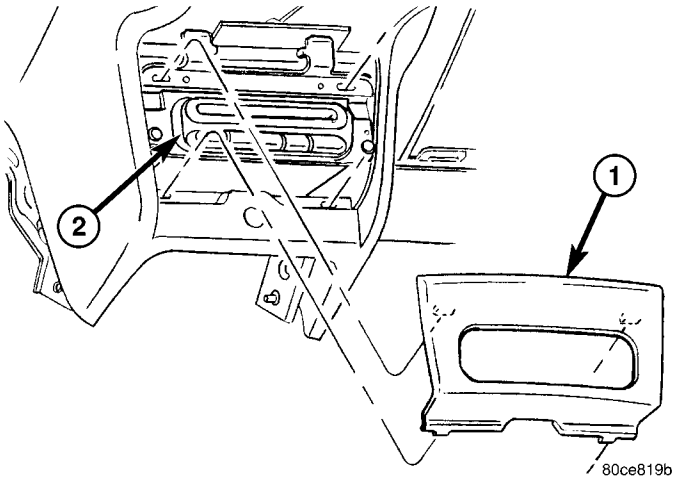

Fig. 1 CD CHANGER TRIM BEZEL

1 - CD CHANGER TRIM BEZEL
2 - CD CHANGER

GLOVE BOX

REMOVAL

(1) Open glove box.
(2) Push in on sides of glove box bin and lower door.
(3) Pivot glove box downward and disengage hinge hooks from instrument panel.
(4) Remove glove box.

GLOVE BOX (Continued)

INSTALLATION

(1) Place glove box in position.
(2) Engage hinge hooks into instrument panel and pivot glove box upward.
(3) Push in sides of glove box bin and snap glove box assembly into instrument panel.
(4) Close glove box door.

GLOVE BOX LATCH

REMOVAL

(1) Open glove box.
(2) Push in on sides of glove box bin and lower door.
(3) Pivot glove box downward and disengage hinge hooks from instrument panel.
(4) Remove glove box.
(5) Remove the assembly screws.
(6) Disassemble the glove box.
(7) Separate the latch from the glove box assembly.

INSTALLATION

(1) Install the latch onto the glove box assembly.
(2) Assemble the glove box.
(3) Install the assembly screws.
(4) Engage hinge hooks into instrument panel and pivot glove box upward.
(5) Push in sides of glove box bin and snap glove box assembly into instrument panel.
(6) Close glove box door.

INSTRUMENT PANEL ASSEMBLY

REMOVAL

The Instrument Panel and HVAC assemblies are removed together as one assembly. If service is required to the individual unit, separation might be required.

(1) Recover the A/C refrigerant(Refer to 24 - HEATING & AIR CONDITIONING - STANDARD PROCEDURE).
(2) Partially drain the coolant(Refer to 7 - COOLING/ENGINE - STANDARD PROCEDURE).
(3) Remove one bolt retaining the A/C lines to the right strut tower.
(4) Remove the two top HVAC housing retaining nuts in engine compartment (Fig. 2).
(5) Hoist vehicle and remove the lower HVAC housing retaining nut.
(6) Lower vehicle from hoist.
(7) Remove the driver and passenger seats(Refer to 23 - BODY/SEATS/SEAT - REMOVAL).

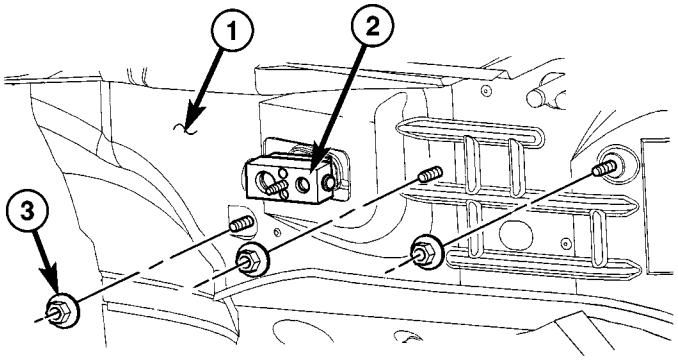

Fig. 2 HVAC HOUSING RETAINING NUTS

1 - BULKHEAD
2 - EXPANSION VALVE
3 - NUT

(8) Disconnect and isolate the battery negative remote cable.
(9) Remove one screw to shift knob and transmission range indicator bezel from floor console.
(10) Remove floor center console. Remove two mounting screws in the front and two mounting screws inside console storage bin (Refer to 23 - BODY/INTERIOR/FLOOR CONSOLE - REMOVAL).
(11) Remove the amplifier(Refer to 8 - ELECTRICAL/AUDIO/AMPLIFIER - REMOVAL).
(12) Using a trim stick (special tool #C-4755) or equivalent, gently pry out on the left and right rear floor heat ducts and remove (Fig. 3).

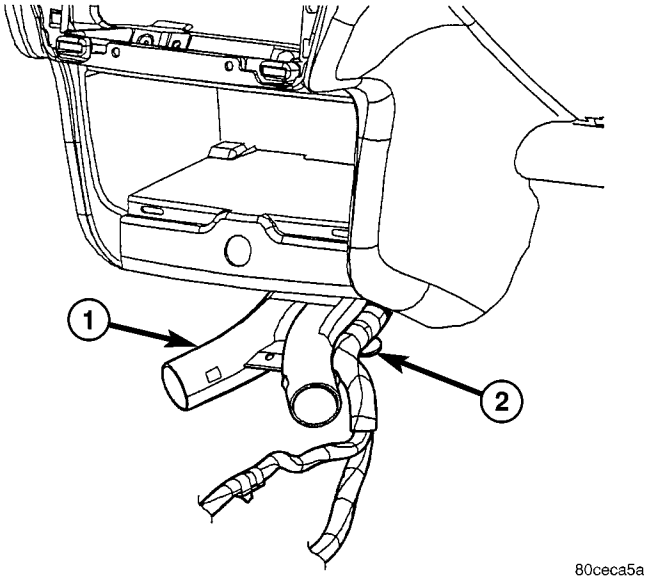

Fig. 3 REAR HEAT DUCT

1 - REAR HEAT DUCT
2 - LOCATING CLIP

INSTRUMENT PANEL ASSEMBLY (Continued)

(13) Disconnect the console wiring connectors and unclip the push in fasteners.

(14) Using a trim stick or equivalent, gently pry up on and remove the right sill plate.

(15) Remove the two screws to the right cowl kick panel and remove from vehicle (Refer to 23 - BODY/INTERIOR/COWL TRIM - REMOVAL).

(16) Using a trim stick or equivalent, gently pry out on the right end cover and remove from vehicle (Refer to 23 - BODY/INSTRUMENT PANEL/INSTRUMENT PANEL END CAP - REMOVAL).

(17) Using a trim stick or equivalent, gently pry out on the right A-pillar trim and remove from vehicle (Refer to 23 - BODY/INTERIOR/A-PILLAR TRIM - REMOVAL).

(18) Open the glove box. Pinch in on the sides and drop to the floor. Pull down to disengage hinges.

(19) Disconnect the right door harness connectors located within the A-pillar.

(20) Remove the four right A-pillar instrument panel retainers.

(21) Remove the right silencer.

(22) Remove the one right side, center instrument panel support bolt.

(23) Using a trim stick or equivalent, gently pry up on and remove the left sill plate(Refer to 23 - BODY/INTERIOR/DOOR SILL TRIM - REMOVAL).

(24) Remove the two screws to the left cowl kick panel and remove from vehicle.

(25) Using a trim stick or equivalent, gently pry out on the left end cover and remove from vehicle (Refer to 23 - BODY/INSTRUMENT PANEL/INSTRUMENT PANEL END CAP - REMOVAL).

(26) Using a trim stick or equivalent, gently pry out on the left A-pillar trim and remove from vehicle (Refer to 23 - BODY/INTERIOR/A-PILLAR TRIM - REMOVAL).

(27) Disconnect the left door harness connectors located within the A-pillar.

(28) Remove the four left A-pillar instrument panel retainers.

(29) Remove five screws and one wire connector to left lower instrument panel trim bezel (Refer to 23 - BODY/INSTRUMENT PANEL/INSTRUMENT PANEL TRIM - REMOVAL).

(30) Remove the left silencer.

(31) Remove the one left side, center instrument panel support bolt.

(32) Remove one bolt to the left side support strut to bulkhead.

(33) Disconnect the junction block wiring connectors.

(34) Remove two screws to the steering column shrouds and remove.

(35) Disconnect all the column wiring and unclip the harness from the steering column.

(36) Disconnect the transmission shift interlock and wire connector.

(37) Remove the four steering column retaining bolts and drop column to floor.

(38) Using a trim stick or equivalent, pry up on the rear of the top cover and pull rearward as you lift off of instrument panel(Refer to 23 - BODY/INSTRUMENT PANEL/INSTRUMENT PANEL TOP PAD - REMOVAL).

(39) Remove instrument panel pad.

(40) Remove seven bolts and five screws attaching instrument panel to fence line and cowl side.

(41) With the help of an assistant, lift up instrument panel and move rearward to remove. Tilt the panel rearward to prevent the coolant from leaking out.

If replacing the instrument panel, transfer all non damaged parts and wiring harness to the new instrument panel assembly.

TO SEPARATE THE INSTRUMENT PANEL AND HVAC UNIT HOUSINGS

- Disconnect the HVAC wiring connector to the instrument panel wire harness.
- Remove the two bolts and two nuts holding the HVAC housing to the instrument panel.
- Lift the instrument panel off the HVAC housing to separate.

INSTALLATION

The Instrument Panel and HVAC assemblies are installed together as one assembly. They must be reconnected before installation.

TO CONNECT THE INSTRUMENT PANEL AND HVAC UNIT HOUSINGS

- Place the instrument panel on the HVAC housing.
- Install the two bolts and two nuts holding the HVAC housing to the instrument panel.
- Connect the HVAC wiring connector to the instrument panel wire harness.

If replacing the instrument panel, transfer all non damaged parts and wiring harness to the new instrument panel assembly.

(1) With the help of an assistant, place the instrument panel in the vehicle, carefully guiding the HVAC housing studs through the bulkhead and into position.

(2) Install the seven bolts and five screws attaching instrument panel to fence line and cowl side (Fig. 4).

(3) Place instrument panel pad into position.

(4) Install the instrument panel top cover(Refer to 23 - BODY/INSTRUMENT PANEL/INSTRUMENT PANEL TOP PAD - INSTALLATION).

INSTRUMENT PANEL ASSEMBLY (Continued)

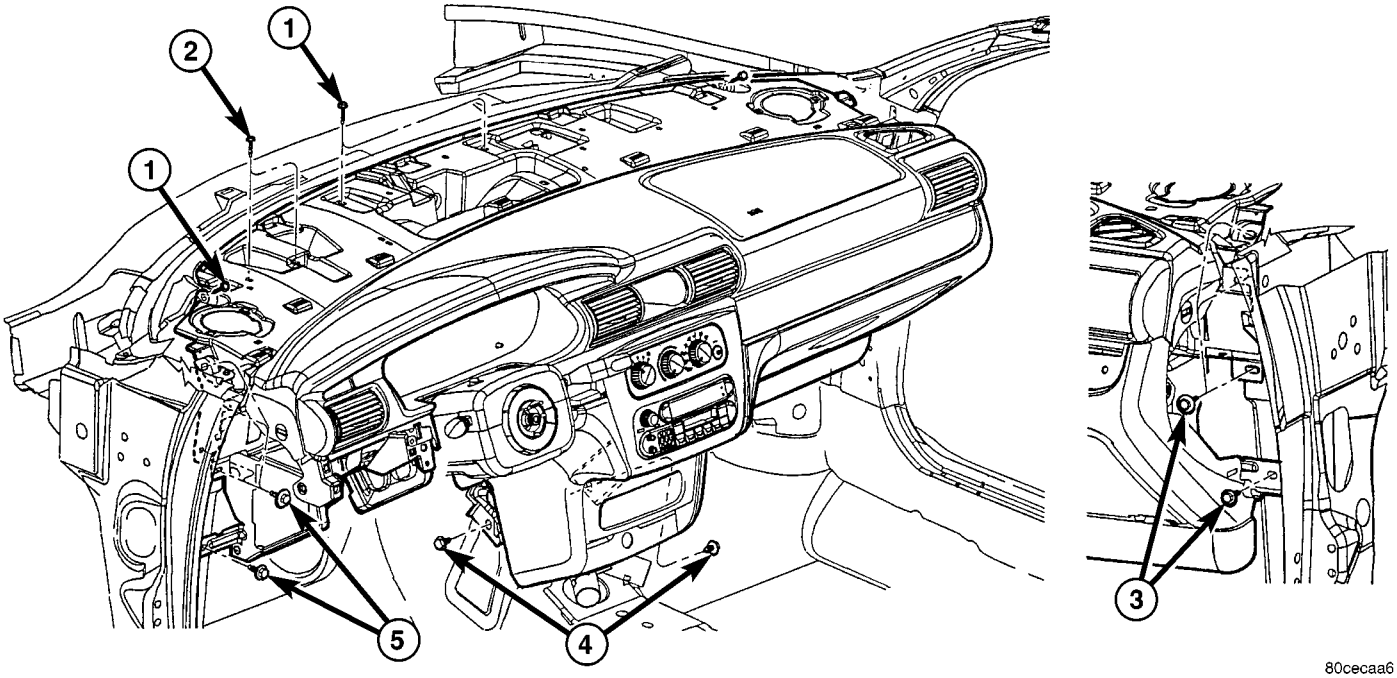

Fig. 4 INSTRUMENT PANEL REMOVAL

1 - INSTRUMENT PANEL TO PLENUM SCREW
2 - INSTRUMENT PANEL STEERING COLUMN TO COWL PLENUM SCREW
3 - RIGHT COWL SIDE BOLTS
4 - INSTRUMENT PANEL CENTER BRACE TO FLOOR
5 - LEFT COWL SIDE BOLTS

(5) Install the four steering column retaining bolts.

(6) Connect the transmission shift interlock and wire connector.

(7) Connect all the column wiring and clip the harness to the steering column.

(8) Install two screws to the steering column shrouds.

(9) Connect the junction block wiring connectors.

(10) Install one bolt to the left side support strut to bulkhead.

(11) Install five screws and one wire connector to left lower instrument panel trim bezel (Refer to 23 - BODY/INSTRUMENT PANEL/INSTRUMENT PANEL TRIM - INSTALLATION).

(12) Install the one left side, center instrument panel support bolt.

(13) Install the left silencer.

(14) Install the four left A-pillar instrument panel retainers.

(15) Connect the right door harness connectors located within the A-pillar.

(16) Install the right A-pillar trim (Refer to 23 - BODY/INTERIOR/A-PILLAR TRIM - INSTALLATION).

(17) Install the left end cover (Refer to 23 - BODY/INSTRUMENT PANEL/INSTRUMENT PANEL END CAP - INSTALLATION).

(18) Install the two screws to the left cowl trim panel (Refer to 23 - BODY/INTERIOR/COWL TRIM - INSTALLATION).

(19) Install the left door sill plate (Refer to 23 - BODY/INTERIOR/DOOR SILL TRIM - INSTALLATION).

(20) Install the one right side, center instrument panel support bolt.

(21) Install the right silencer.

(22) Install the four right A-pillar instrument panel retainers.

(23) Connect the right door harness connectors located within the A-pillar.

(24) Install the glove box.

(25) Install the right A-pillar trim (Refer to 23 - BODY/INTERIOR/A-PILLAR TRIM - INSTALLATION).

(26) Install the right end cover (Refer to 23 - BODY/INSTRUMENT PANEL/INSTRUMENT PANEL END CAP - INSTALLATION).

(27) Install the two screws to the right cowl trim panel (Refer to 23 - BODY/INTERIOR/COWL TRIM - INSTALLATION).

(28) Install the right door sill plate (Refer to 23 - BODY/INTERIOR/DOOR SILL TRIM - INSTALLATION).

(29) Connect the console wiring connectors and clip the push in fasteners in.

INSTRUMENT PANEL ASSEMBLY (Continued)

(30) Install the left and right rear floor heat ducts (Fig. 3).

(31) Connect the two harness connectors to the amplifier.

(32) Install the amplifier (Refer to 8 - ELECTRICAL/AUDIO/AMPLIFIER - INSTALLATION).

(33) Install floor center console. Install two mounting screws in the front and two mounting screws inside console storage bin (Refer to 23 - BODY/INTERIOR/FLOOR CONSOLE - INSTALLATION).

(34) Install the transmission range indicator bezel and one screw to shift knob.

(35) Connect the battery negative remote cable.

(36) Install the driver and passenger seats (Refer to 23 - BODY/SEATS/SEAT - INSTALLATION).

(37) Hoist vehicle and install the lower HVAC housing retaining nut.

(38) Lower vehicle from hoist.

(39) Install the two top HVAC housing retaining nuts in engine compartment (Fig. 2).

(40) Install one bolt retaining the A/C lines to the right strut tower.

(41) Top off the coolant (Refer to 7 - COOLING/ENGINE/COOLANT - STANDARD PROCEDURE).

(42) Recharge the A/C refrigerant with specified amount. Refer to placard in engine compartment (Refer to 24 - HEATING & AIR CONDITIONING - STANDARD PROCEDURE).

INSTRUMENT PANEL CENTER BEZEL

REMOVAL

(1) Disconnect and isolate the battery negative remote cable.

(2) Using a trim stick (special tool #C-4755) or equivalent, gently pry out on the edge of the instrument panel center bezel and pull outward (Fig. 5).

(3) Disconnect the wire connector to the HVAC control.

(4) Remove the instrument panel center bezel from the vehicle.

INSTALLATION

The HVAC control is mounted to the instrument panel center bezel. If replacing the center bezel or the HVAC control, it must be removed from the center bezel. Remove the six retaining screws to the HVAC control.

(1) Connect the wire connectors to the HVAC control.

(2) Position the center bezel over the retaining slots and firmly snap the instrument panel center bezel into place (Fig. 5).

(3) Connect the battery negative remote cable.

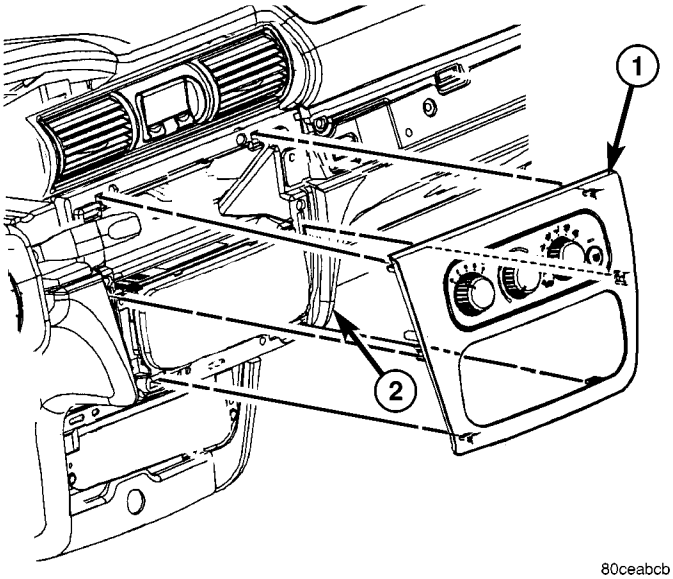

Fig. 5 INSTRUMENT PANEL CENTER BEZEL

1 - CENTER BEZEL
2 - INSTRUMENT PANEL

INSTRUMENT PANEL CLUSTER BEZEL

REMOVAL

(1) Disconnect and isolate the battery negative remote cable.

(2) Remove left end cover.

(3) Using a trim stick (special tool #C-4755) or equivalent, gently pry up on the power mirror switch. Disconnect the switch and remove.

(4) Using a trim stick or equivalent, gently pry up on instrument panel center trim bezel.

(5) Disconnect the HVAC control connector.

(6) Remove one screw from the trim bezel to the right of the steering column and remove trim by unsnapping clips.

(7) Remove the one screw from the passenger side trim bezel and remove trim by unsnapping clips.

(8) Remove five screws to left lower instrument panel trim.

(9) Remove the four screws to the cluster bezel (Fig. 6). Using a trim stick or equivalent, gently pry out the cluster bezel.

(10) If the vehicle is equipped with a Compass Mini-Trip Computer (CMTC/Traveler), disconnect the module and then remove the cluster bezel assembly.

INSTALLATION

(1) Position the cluster bezel and if so equipped, connect the traveler connector, then snap the cluster bezel into position (Fig. 6).

(2) Install the four screws to the cluster bezel.

INSTRUMENT PANEL CLUSTER BEZEL (Continued)

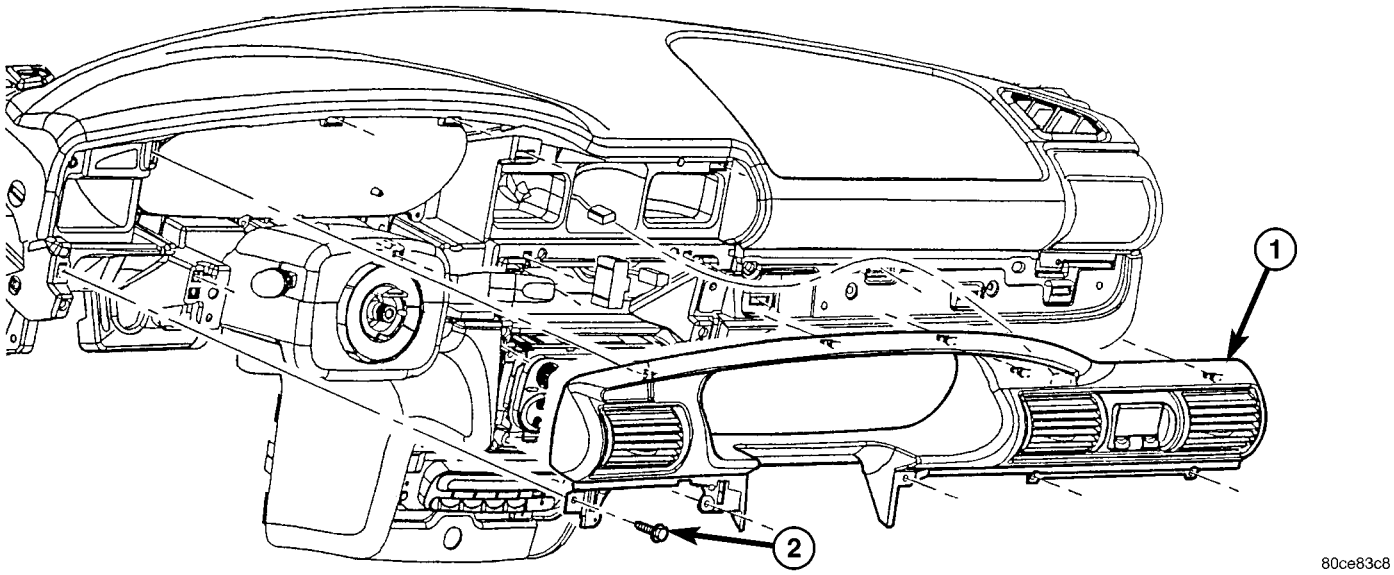

Fig. 6 INSTRUMENT PANEL CLUSTER BEZEL

1 - INSTRUMENT PANEL CLUSTER BEZEL
2 - SCREW

(3) Install the five screws to the left lower instrument panel trim.

(4) Connect the mirror switch connector and firmly snap it into place.

(5) Install the one screw to the trim bezel to the right side of the steering column.

(6) Firmly snap into place and then install one screw to the passenger side trim bezel.

(7) Connect the HVAC control connectors.

(8) Position the center bezel over the retaining slots and firmly snap instrument panel center bezel into place.

(9) Install the left end cover.

(10) Connect the battery negative cable.

INSTRUMENT PANEL END COVER

REMOVAL

(1) Open front door.

(2) Using a trim stick (special tool #C-4755) or equivalent, disengage clips holding end cover to instrument panel (Fig. 7).

INSTALLATION

(1) Position end cover over retaining slots and firmly snap into place (Fig. 7).

(2) Close front door.

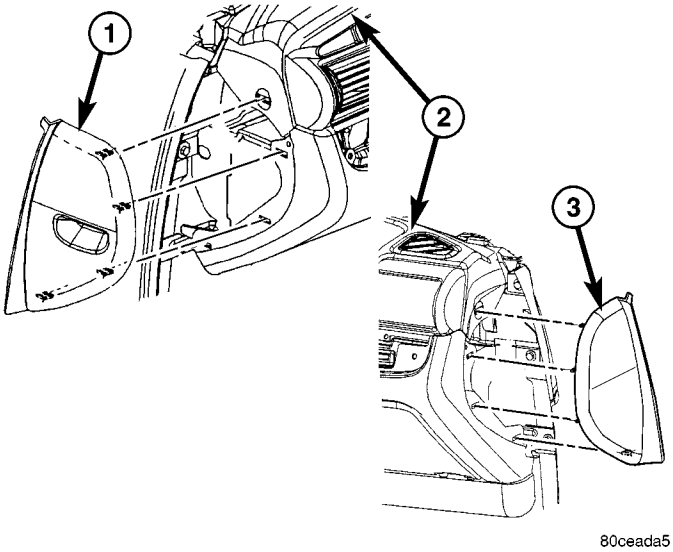

Fig. 7 INSTRUMENT PANEL END COVER

1 - LEFT END COVER
2 - INSTRUMENT PANEL
3 - RIGHT END COVER

INSTRUMENT PANEL INBOARD BEZEL

REMOVAL

(1) Remove instrument panel center bezel. Refer to Body, Instrument Panel, Instrument Panel Center Bezel, Removal.

(2) Remove the one retaining screw located on the left side of the center stack, behind the center bezel (Fig. 8).

(3) Using a trim stick (special tool #C-4755) or equivalent, gently pry out on the instrument panel inboard bezel and remove.

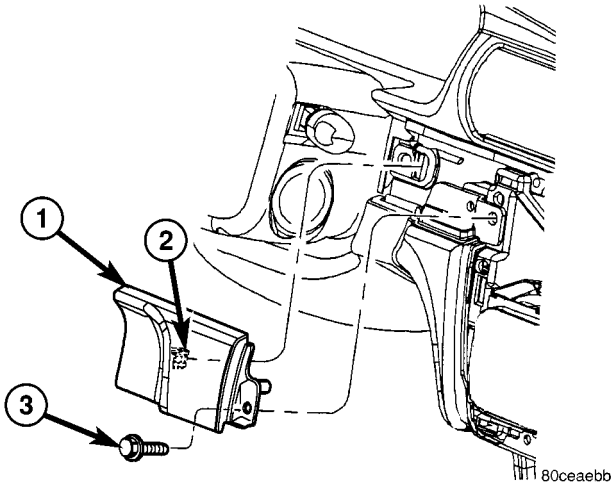

Fig. 8 INSTRUMENT PANEL INBOARD BEZEL

1 - INBOARD BEZEL
2 - CLIP
3 - SCREW

INSTALLATION

(1) Position the instrument panel inboard bezel over the retaining slots and firmly snap into place (Fig. 8).

(2) Install the one retaining screw located on the left side of the center stack, behind the center bezel.

(3) Install the instrument panel center bezel. Refer to Body, Instrument Panel, Instrument Panel Center Bezel, Installation.

INSTRUMENT PANEL OUTBOARD BEZEL

REMOVAL

(1) Disconnect and isolate the battery negative remote cable.

(2) Using a trim stick (special tool #C-4755) or equivalent, gently pry out on the instrument panel outboard switch bezel (Fig. 9).

(3) Disconnect the wire connector.

(4) Remove bezel from vehicle.

(5) Push in the sides of the power mirror switch to release it from the bezel.

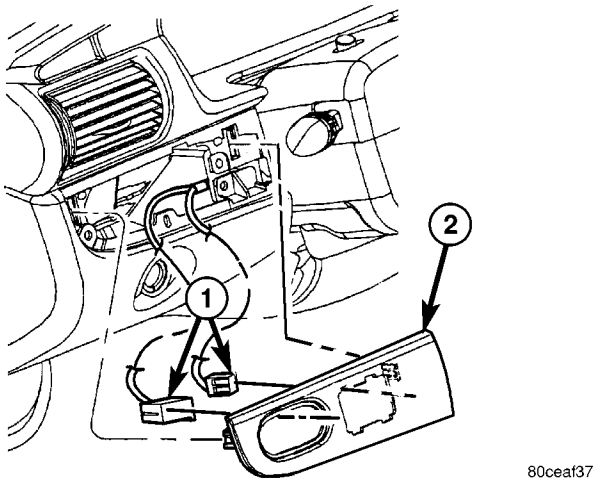

Fig. 9 INSTRUMENT PANEL OUTBOARD SWITCH BEZEL

1 - WIRE CONNECTORS
2 - OUTBOARD SWITCH BEZEL

INSTALLATION

(1) Place the power mirror switch into the outboard switch bezel and firmly snap into place (Fig. 9).

(2) Connect the wire connector.

(3) Position the instrument panel outboard switch bezel over retaining slots and firmly snap into place.

(4) Connect the battery negative remote cable.

INSTRUMENT PANEL TOP COVER

REMOVAL

(1) Remove A-pillar trim. Using a trim stick (special tool #C-4755) or equivalent, gently pry out and remove.

(2) Using a trim stick, disengage clips holding rear edge of top cover to instrument panel (Fig. 10).

NOTE: The Instrument Panel Top Cover may be hard to unsnap from the instrument panel. Be sure not to mar, scuff, or damage the instrument panel pad.

(3) Pull top cover rearward to disengage hooks holding front of top cover to instrument panel.

(4) Remove top cover from vehicle.

INSTALLATION

(1) Place instrument panel top cover in position on vehicle (Fig. 10).

(2) Push top cover forward to engage hooks to hold front of top cover to instrument panel.

(3) Engage clips to hold rear edge of top cover to instrument panel.

(4) Pull top cover rearward as you firmly push down and snap into place.

(5) Install A-pillar trim.

LEFT LOWER INSTRUMENT PANEL TRIM

REMOVAL

(1) Using a trim stick (special tool #C-4755) or equivalent, gently pry out on the left instrument panel end cover and remove from vehicle (Refer to 23 - BODY/INSTRUMENT PANEL/INSTRUMENT PANEL END CAP - REMOVAL).

(2) Using a trim stick or equivalent, gently pry out on the power mirror switch bezel, disconnect the switch connector and remove.

(3) Remove the five screws to the left lower instrument panel trim, Disengage one wiring connector to deck lid release and remove bezel from vehicle.

INSTALLATION

(1) Connect the deck lid release switch connector.

(2) Position the left lower instrument panel trim over the retaining slots and firmly push into place.

(3) Install the five screws to the left lower instrument panel trim.

(4) Connect the power mirror switch connector and position the bezel over the retaining slots and firmly snap into place.

(5) Position the left instrument panel end cover over the retaining slots and firmly snap into place (Refer to 23 - BODY/INSTRUMENT PANEL/INSTRUMENT PANEL END CAP - INSTALLATION).

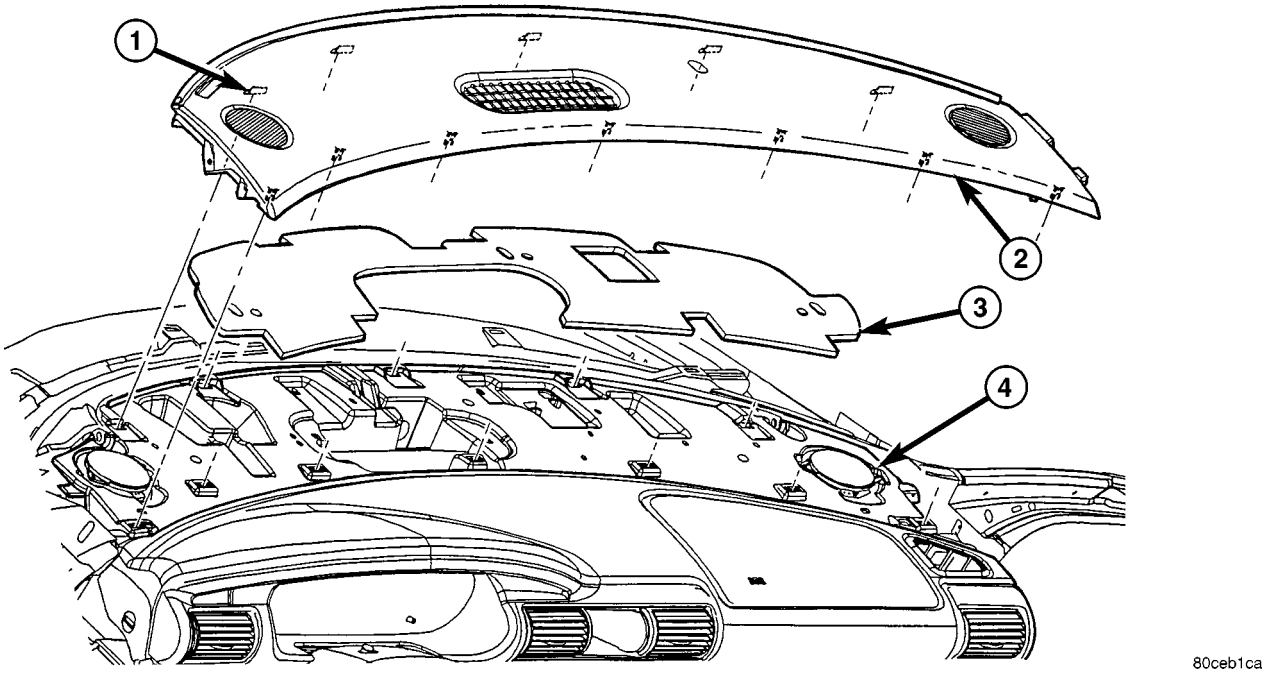

Fig. 10 INSTRUMENT PANEL TOP COVER

1 - CLIPS
2 - INSTRUMENT PANEL TOP COVER
3 - INSTRUMENT PANEL PAD
4 - INSTRUMENT PANEL ASSEMBLY

LEFT LOWER INSTRUMENT SILENCER PANEL

REMOVAL

(1) Remove end cap.
(2) Remove power mirror switch bezel.
(3) Disconnect wirer connector from power mirror switch.
(4) Remove five screws to the left lower instrument panel trim and disconnect wire connector.
(5) Remove push in fastener and stamp nut (Fig. 11)
(6) Using rearward motion pull the left lower silencer panel from the instrument panel and remove.

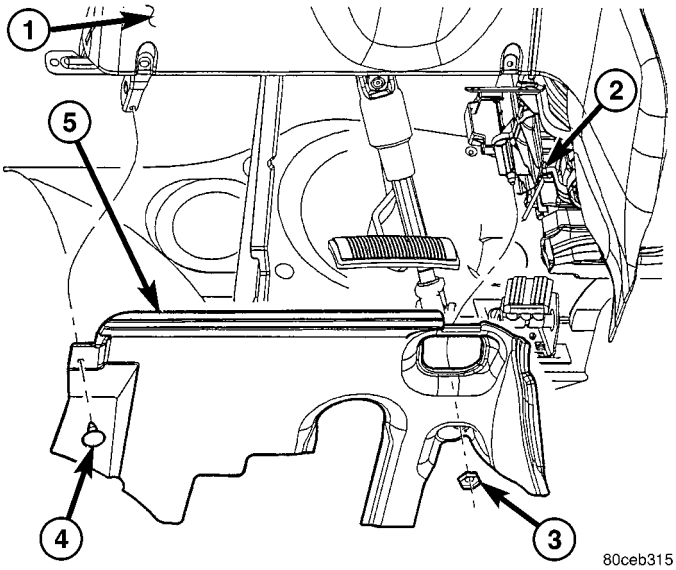

Fig. 11 LEFT LOWER SILENCER PANEL

1 - LEFT LOWER INSTRUMENT PANEL TRIM
2 - HVAC SILENCER ATTACHING STUD
3 - STAMP NUT
4 - PUSH IN FASTENER
5 - LEFT LOWER SILENCER PANEL

INSTALLATION

(1) Position silencer panel over HVAC stud (Fig. 11).
(2) Install stamp nut and install push in fastener.
(3) Connect deck lid release wire connector.
(4) Position the left lower instrument panel trim over the retaining slots and firmly push into place.
(5) Install five screws attaching left lower instrument panel trim.
(6) Connect power mirror switch wire connector.
(7) Install instrument panel bezel.
(8) Install end cap.

RIGHT LOWER SILENCER PANEL

REMOVAL

(1) Remove the attaching stamp nut (Fig. 12).
(2) Using a trim stick gently pry out silencer panel from lower right trim bezel.
(3) Remove panel from the instrument panel.

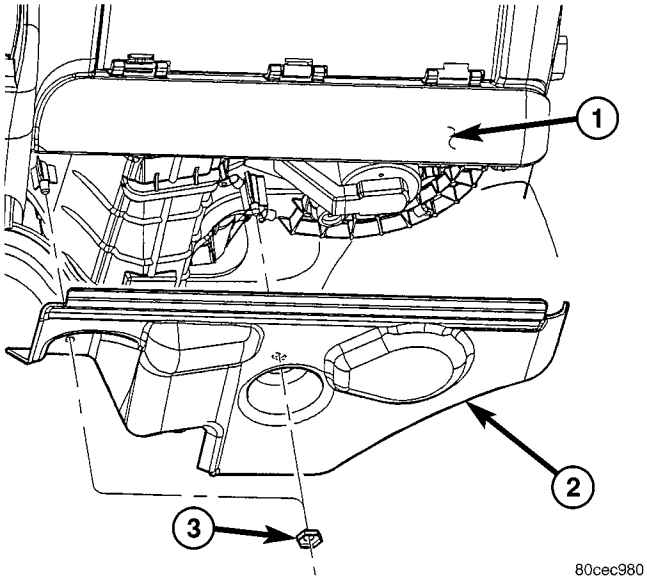

Fig. 12 RIGHT LOWER SILENCER PANEL

1 - RIGHT LOWER TRIM BEZEL
2 -RIGHT LOWER SILENCER PANEL
3 - STAMP NUT

INSTALLATION

(1) Place right lower silencer panel into position (Fig. 12).
(2) Push firmly into place.
(3) Install attaching stamp nut.

RIGHT INSTRUMENT PANEL TRIM BEZEL

REMOVAL

(1) Remove instrument panel center bezel. (Refer to 23 - BODY/INSTRUMENT PANEL/INSTRUMENT PANEL CENTER BEZEL - REMOVAL)

(2) Remove the one retaining screw located on the right side of the center stack, behind the center bezel (Fig. 13).

(3) Using a trim stick (special tool #C-4755) or equivalent, gently pry out on the right instrument panel trim bezel and remove.

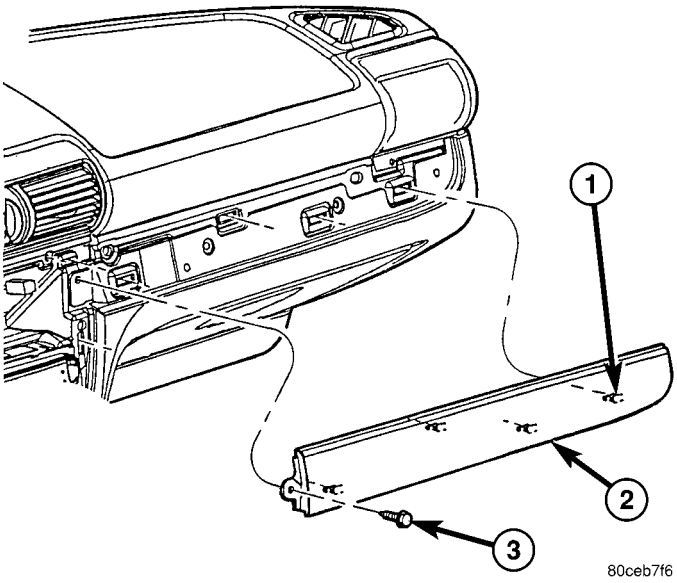

Fig. 13 RIGHT INSTRUMENT PANEL TRIM BEZEL

1 - CLIP
2 - RIGHT INSTRUMENT PANEL TRIM PANEL
3 - SCREW

INSTALLATION

(1) Position the right instrument panel trim bezel over retaining slots and firmly snap into place (Fig. 13).

(2) Install the one retaining screw located on the right side of the center stack, behind the center bezel.

(3) Install the instrument panel center bezel. (Refer to 23 - BODY/INSTRUMENT PANEL/INSTRUMENT PANEL CENTER BEZEL - INSTALLATION).

RIGHT LOWER INSTRUMENT PANEL TRIM

REMOVAL

(1) Disconnect and isolate the battery negative remote cable.

(2) Remove one screw to shift knob and transmission range indicator bezel from floor console.

(3) Remove floor console(Refer to 23 - BODY/INTERIOR/FLOOR CONSOLE - REMOVAL).

(4) Remove instrument panel kick shield (Refer to 23 - BODY/INSTRUMENT PANEL/KNEE BLOCKER - REMOVAL).

(5) Remove right and left instrument panel end cover(Refer to 23 - BODY/INSTRUMENT PANEL/INSTRUMENT PANEL END CAP - REMOVAL).

(6) Remove left lower instrument panel trim(Refer to 23 - BODY/INSTRUMENT PANEL/INSTRUMENT PANEL TRIM - REMOVAL).

(7) Remove instrument panel center bezel(Refer to 23 - BODY/INSTRUMENT PANEL/INSTRUMENT PANEL CENTER BEZEL - REMOVAL).

(8) Remove instrument panel inboard bezel and outboard bezel (Refer to 23 - BODY/INSTRUMENT PANEL/INSTRUMENT PANEL TRIM - REMOVAL) (Refer to 23 - BODY/INSTRUMENT PANEL/INSTRUMENT PANEL TRIM - REMOVAL).

(9) Remove right instrument panel trim bezel (Refer to 23 - BODY/INSTRUMENT PANEL/INSTRUMENT PANEL TRIM - REMOVAL).

(10) Remove instrument panel cluster bezel (Refer to 23 - BODY/INSTRUMENT PANEL/CLUSTER BEZEL - REMOVAL).

(11) Remove CD changer Trim Bezel, CD player, and CD support bracket (if equipped)(Refer to 23 - BODY/INSTRUMENT PANEL/INSTRUMENT PANEL TRIM - REMOVAL).

(12) Remove radio.

(13) Unsnap right a/c barrel and remove a/c housing.

(14) Remove glove box (Refer to 23 - BODY/INSTRUMENT PANEL/GLOVE BOX - REMOVAL).

(15) Remove 13 screws and remove panel.

(16) Remove cubby bin mat (if equipped).

INSTALLATION

(1) Install new right lower trim panel onto instrument panel beam assembly.

(2) Attach five screws around glove box opening. Note the lower right hand screw must be installed first to properly align glove box door.

(3) Attach one screw on right outboard end.

(4) Attach two screws above glove box door opening.

(5) Attach two screws below radio opening.

RIGHT LOWER INSTRUMENT PANEL TRIM (Continued)

(6) Attach three screws along left end of panel.
(7) Install glove box assembly (Refer to 23 - BODY/INSTRUMENT PANEL/GLOVE BOX - INSTALLATION).
(8) Install right a/c housing and attach with three screws. Note the two upper screw attachments use the pan head screws and the bottom attachment uses the hex head screw.
(9) Attach right a/c barrel.
(10) Install radio and attach.
(11) Install CD bracket, CD player, and CD trim bezel (if so equipped) (Refer to 23 - BODY/INSTRUMENT PANEL/INSTRUMENT PANEL TRIM - INSTALLATION) .
(12) Install instrument panel cluster bezel (Refer to 23 - BODY/INSTRUMENT PANEL/CLUSTER BEZEL - INSTALLATION).
(13) Install outboard, inboard, and right trim bezels (Refer to 23 - BODY/INSTRUMENT PANEL/INSTRUMENT PANEL TRIM - INSTALLATION) (Refer to 23 - BODY/INSTRUMENT PANEL/INSTRUMENT PANEL TRIM - INSTALLATION) (Refer to 23 - BODY/INSTRUMENT PANEL/INSTRUMENT PANEL TRIM - INSTALLATION)
(14) Install center bezel (Refer to 23 - BODY/INSTRUMENT PANEL/INSTRUMENT PANEL CENTER BEZEL - INSTALLATION)
(15) Install left lower instrument panel trim (Refer to 23 - BODY/INSTRUMENT PANEL/INSTRUMENT PANEL TRIM - INSTALLATION)
(16) Install right and left instrument panel end covers (Refer to 23 - BODY/INSTRUMENT PANEL/INSTRUMENT PANEL END CAP - INSTALLATION)
(17) Install instrument panel kick shield (Refer to 23 - BODY/INSTRUMENT PANEL/KNEE BLOCKER - INSTALLATION).
(18) Install console assembly (Refer to 23 - BODY/INTERIOR/FLOOR CONSOLE - INSTALLATION)
(19) Reconnect battery.

KICK SHIELD

REMOVAL

(1) Remove push pin near accelerator pedal.
(2) Unsnap kick shield from right lower instrument panel trim.

INSTALLATION

(1) Snap kick shield onto right lower instrument panel trim.
(2) Secure push nut through hole into HVAC unit.
(3) Pull on shield to insure engagement.

DASH PANEL

REMOVAL

NOTE: The instrument panel dash panel (vinyl skin and substrate) can be removed without removing the entire instrument panel and HVAC assemblies.

(1) Follow all of the right lower instrument panel removal procedures (Refer to 23 - BODY/INSTRUMENT PANEL/INSTRUMENT PANEL TRIM - REMOVAL) .
(2) Disconnect and remove passenger air bag (Refer to 8 - ELECTRICAL/RESTRAINTS/PASSENGER AIRBAG - REMOVAL).
(3) Remove instrument panel top cover (Refer to 23 - BODY/INSTRUMENT PANEL/INSTRUMENT PANEL TOP PAD - REMOVAL).
(4) Remove instrument panel speakers (if equipped).
(5) Remove instrument panel cluster.
(6) Remove two screw attachments to beam assembly through passenger airbag opening.
(7) Remove two screw attachments to beam assembly below passenger airbag opening.
(8) Remove three screw attachments to left, right-center, and right a/c ducts.
(9) Remove two screw attachments through cluster opening.
(10) Remove four screw attachments in center stack area (two at HVAC control opening, and two at radio opening).
(11) Remove four screw attachments around steering column. Position steering column as required to access screw heads.
(12) Remove one screw on left outboard corner to multi-function junction block bracket.
(13) Remove two screw attachments to defroster duct. Remove defroster duct.
(14) Remove four screw attachments along rearward edge of top cover.
(15) Remove two instrument panel steering column to cowl plenum screws.
(16) Remove five instrument panel to plenum screws.
(17) Remove panel.
(18) Remove right demist grille.

DASH PANEL (Continued)

INSTALLATION

(1) Install right demist grille.

(2) Load panel onto beam assembly.

(3) Attach one screw to right attachment to beam assembly behind cluster (must be done first to correctly position panel on beam assembly).

(4) Attach two screws to left a/c duct and right upper center a/c duct.

(5) Attach two screws through passenger air bag opening to beam assembly.

(6) From fight to left, attach the following 12 screws:

(a) Two screws below passenger airbag opening.

(b) Four screws in center stack area.

(c) Four screws around steering column and one screw to left attachment to beam assembly behind cluster.

(d) One screw to left lower corner to multi-function junction block bracket.

(7) Attach one screw attachment to right a/c duct.

(8) Attach four screw attachments along top cover rearward edge.

(9) Assemble defroster duct and attach two screws.

(10) Attach five instrument panel to plenum screws.

(11) Attach two instrument panel steering column to plenum screws.

(12) Assemble instrument panel cluster.

(13) If vehicle is equipped with front speakers, install four push nuts (P/N 06034833), connect speaker and attach to panel.

(14) If vehicle is equipped without front speakers, install two mastic patches (P/N 04595844AA) over speaker hole.

(15) Assemble passenger air bag.

(16) Assemble top cover.

(17) Install instrument panel lower right trim panel (Refer to 23 - BODY/INSTRUMENT PANEL/ INSTRUMENT PANEL TRIM - INSTALLATION).

INTERIOR

TABLE OF CONTENTS

page

A-PILLAR TRIM
REMOVAL
REMOVAL 79
REMOVAL- JR-27 ONLY 79
INSTALLATION
INSTALLATION 80
INSTALLATION - JR-27 ONLY 80
B-PILLAR LOWER TRIM
REMOVAL 80
INSTALLATION 80
CARPETS AND FLOOR MATS
REMOVAL
REMOVAL 80
REMOVAL - JR-27 ONLY 81
INSTALLATION
INSTALLATION 81
INSTALLATION - JR-27 ONLY 81
CENTER HEADER TRIM PANEL
REMOVAL
REMOVE 82
INSTALLATION 82
COWL TRIM PANEL
REMOVAL 82
INSTALLATION 82
DOOR SILL TRIM PANEL
REMOVAL 82
INSTALLATION 82
FLOOR CONSOLE
REMOVAL 83
INSTALLATION 83
FORWARD INSTRUMENT PANEL CONSOLE
REMOVAL 84
INSTALLATION 84
HEADLINER
REMOVAL 84
INSTALLATION 85
HEADER TRIM PANEL - RIGHT OR LEFT
REMOVAL - JR-27 ONLY 86
INSTALLATION - JR-27 ONLY 86
LOWER QUARTER TRIM
REMOVAL 87
INSTALLATION 87
QUARTER TRIM PANEL
REMOVAL 87
INSTALLATION 87
REAR SHELF TRIM PANEL
REMOVAL 88
INSTALLATION 88
REAR VIEW MIRROR
REMOVAL
REMOVAL 89
REMOVAL - JR-27 ONLY 89
INSTALLATION
INSTALLATION 89
INSTALLATION - JR-27 ONLY 89
SHIFT BOOT
REMOVAL 90
INSTALLATION 90
SUN VISOR
REMOVAL 90
INSTALLATION 90
SUN VISOR SUPPORT
REMOVAL 91
INSTALLATION 91
UPPER B-PILLAR TRIM
REMOVAL 91
INSTALLATION 91
UPPER DECK MOLDING
REMOVAL 91
INSTALLATION 91
UPPER QUARTER TRIM
REMOVAL 91
INSTALLATION 92
WINDSHIELD HEADER DAMPER
REMOVAL 92
INSTALLATION 92

A-PILLAR TRIM

REMOVAL

REMOVAL

(1) Remove the front door opening weatherstrip along the A-pillar. (Refer to 23 - BODY/WEATHERSTRIP/SEALS/DOOR OPENING WEATHERSTRIP - REMOVAL)

(2) Disengage clips attaching A-pillar trim to A-pillar (Fig. 1).

(3) Remove A-pillar trim from vehicle.

REMOVAL- JR-27 ONLY

(1) Remove header molding panel (Refer to 23 - BODY/INTERIOR/INTERIOR TRIM PANELS - REMOVAL).

(2) Disengage clips attaching A-pillar trim panel to A-pillar.

(3) Remove trim panel from vehicle (Fig. 2).

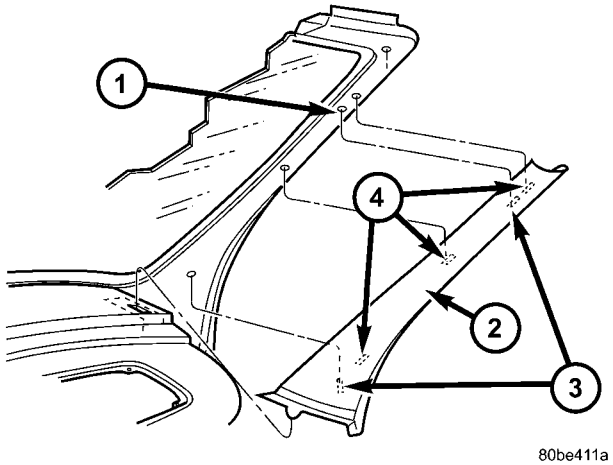

Fig. 2 A-Pillar Trim Panel

1 - A-PILLAR
2 - A-PILLAR TRIM PANEL
3 - LOCATOR(S)
4 - CLIP(S)

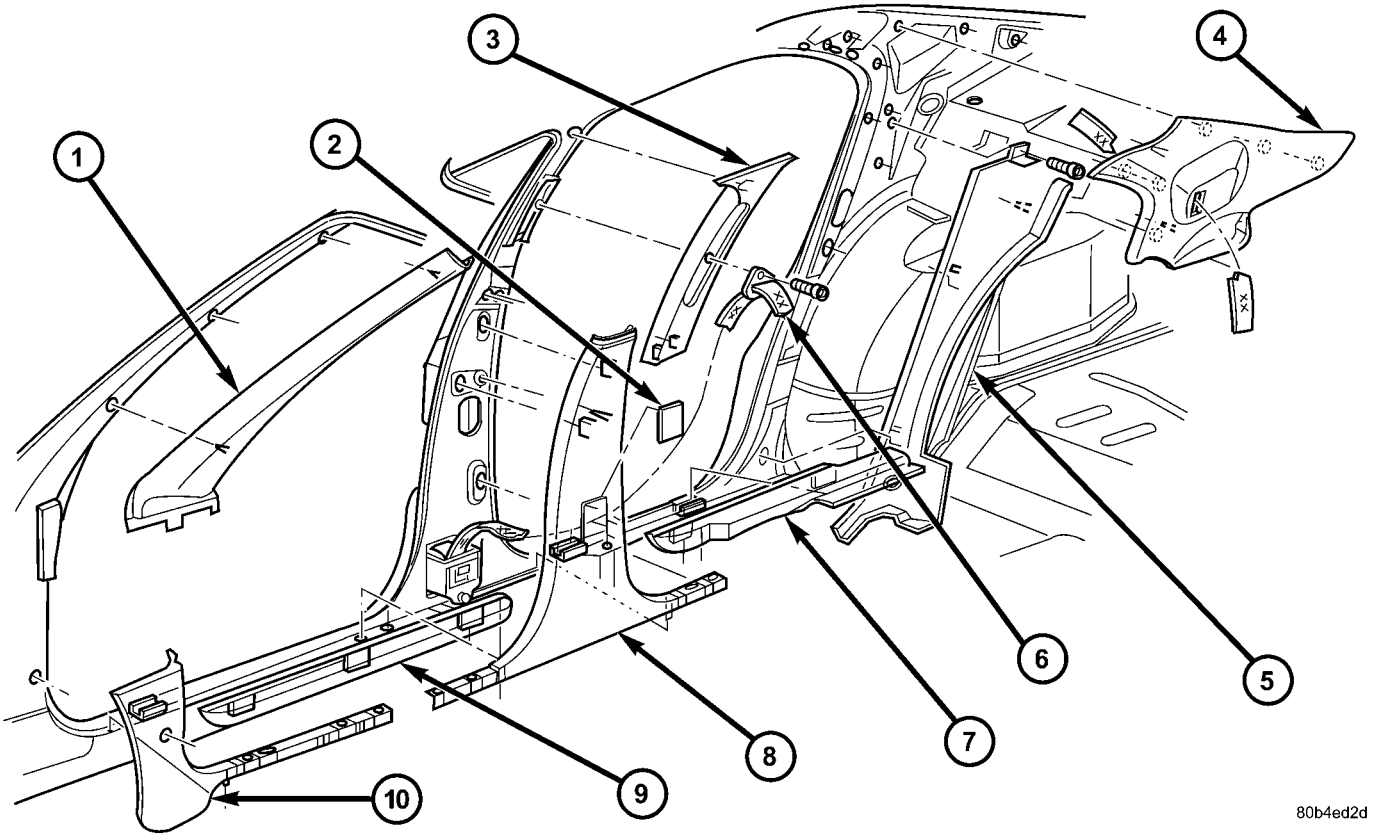

Fig. 1 INTERIOR TRIM PANELS

1 - A-PILLAR TRIM
2 - BEZEL - B-PILLAR LOWER
3 - UPPER B-PILLAR TRIM
4 - UPPER QUARTER TRIM
5 - LOWER QUARTER TRIM
6 - SEAT BELT
7 - SCUFF PLATE
8 - LOWER B-PILLAR TRIM
9 - SCUFF PLATE
10 - COWL TRIM

A-PILLAR TRIM (Continued)

INSTALLATION

INSTALLATION

(1) Place A-pillar trim into position.
(2) Engage clips attaching A-pillar trim to A-pillar.
(3) Install the door opening weatherstrip to the A-pillar. (Refer to 23 - BODY/WEATHERSTRIP/SEALS/DOOR OPENING WEATHERSTRIP - INSTALLATION)

INSTALLATION - JR-27 ONLY

(1) Position trim panel near A-pillar.
(2) Align locating pins on back side of trim panel to holes in A-pillar.
(3) Press clips on A-pillar trim panel into slots in A-pillar.
(4) Install header molding panel(Refer to 23 - BODY/INTERIOR/INTERIOR TRIM PANELS - INSTALLATION).

B-PILLAR LOWER TRIM

REMOVAL

(1) Remove upper B-pillar trim. (Refer to 23 - BODY/INTERIOR/UPPER B-PILLAR TRIM - REMOVAL)
(2) Disengage clips attaching seat belt access panel to lower B-pillar trim (Fig. 1).
(3) Remove scuff plates. (Refer to 23 - BODY/INTERIOR/DOOR SILL SCUFF PLATE - REMOVAL)
(4) Remove the screws attaching the trim to the door sills.
(5) Disengage clips attaching lower B-pillar trim to B-pillar.
(6) Route seat belt webbing through access hole in lower B-pillar trim.
(7) Remove lower B-pillar trim from vehicle.

INSTALLATION

(1) Place lower B-pillar trim into position.
(2) Route seat belt webbing through access hole in lower B-pillar trim.
(3) Engage clips attaching lower B-pillar trim to B-pillar.
(4) Install the screws attaching the trim to the door sills.
(5) Install scuff plates. (Refer to 23 - BODY/INTERIOR/DOOR SILL SCUFF PLATE - INSTALLATION)
(6) Engage clips attaching seat belt access panel to lower B-pillar trim.
(7) Install upper B-pillar trim. (Refer to 23 - BODY/INTERIOR/UPPER B-PILLAR TRIM - INSTALLATION)

CARPETS AND FLOOR MATS

REMOVAL

REMOVAL

(1) Remove door sill scuff plates. (Refer to 23 - BODY/INTERIOR/DOOR SILL SCUFF PLATE - REMOVAL)
(2) Remove rear seat cushion. (Refer to 23 - BODY/SEATS/SEAT CUSHION - REMOVAL)
(3) Remove front seats. (Refer to 23 - BODY/SEATS/SEAT - REMOVAL)
(4) Remove amplifier on passenger side of floor pan, if equipped.
(5) Remove bolts attaching front seat belts to floor.
(6) Remove lower B-pillar trim panels as necessary to clear carpet.
(7) Remove cowl trim panels. (Refer to 23 - BODY/INTERIOR/COWL TRIM - REMOVAL)
(8) Remove floor console. (Refer to 23 - BODY/INTERIOR/FLOOR CONSOLE - REMOVAL)
(9) Remove forward instrument panel console. (Refer to 23 - BODY/INTERIOR/FORWARD INSTRUMENT PANEL CONSOLE - REMOVAL)
(10) Remove push pin fasteners (Fig. 3).
(11) Pull carpet from behind brake pedal, accelerator pedal, and HVAC.
(12) Fold carpet to center of vehicle.
(13) Remove carpet from vehicle through passenger door opening.

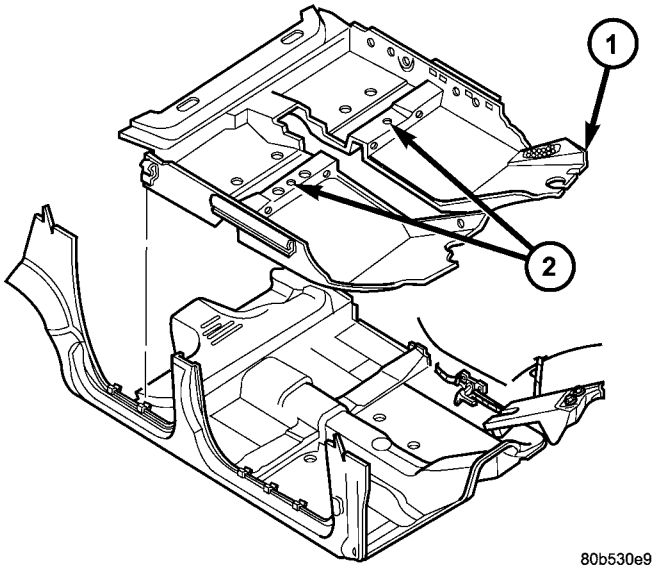

Fig. 3 FLOOR CARPET

1 - FLOOR CARPET
2 - PUSH-PIN FASTENERS

CARPETS AND FLOOR MATS (Continued)

REMOVAL - JR-27 ONLY

(1) Lower convertible top to full down position.
(2) Remove front seats.
(3) Remove rear seat cushion.
(4) Remove floor console and center instrument panel console.
(5) Remove door sill trim panels.
(6) Remove cowl trim panels.
(7) Remove quarter trim panels.
(8) Remove amplifier on passenger side of floor pan, if so equipped.
(9) Remove wiring troughs holding carpet at outboard ends of rear seat crossmember.
(10) Remove accelerator pedal.
(11) Remove instrument panel hush panels.
(12) Remove push-in fasteners from rear of carpet attaching carpet to rear seat crossmember (Fig. 4).
(13) Remove plastic sill retainers from metal clips along door sill panel.
(14) Remove carpet from vehicle.

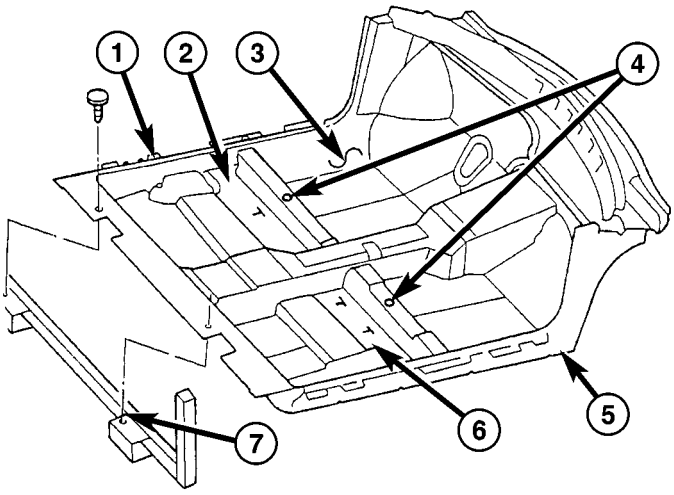

Fig. 4 FLOOR CARPET JR-27

1 - DOOR SILL
2 - SEAT WIRING SLIT
3 - CARPET
4 - PUSH-PIN FASTENERS
5 - DOOR SILL
6 - AMPLIFIER WIRING SLIT
7 - REAR SEAT CROSSMEMBER

INSTALLATION

INSTALLATION

(1) Install carpet into vehicle through passenger door opening.
(2) Unfold carpet into position.
(3) Install carpet behind brake pedal, accelerator pedal, and HVAC.
(4) Install the tunnel push pin fastener.
(5) Install the front seat and crossmember push pin fasteners.
(6) Install the two push pin fasteners into the floor pan.
(7) Install forward instrument panel console. (Refer to 23 - BODY/INTERIOR/FORWARD INSTRUMENT PANEL CONSOLE - INSTALLATION)
(8) Install floor console. (Refer to 23 - BODY/INTERIOR/FLOOR CONSOLE - INSTALLATION)
(9) Install cowl trim panels. (Refer to 23 - BODY/INTERIOR/COWL TRIM - INSTALLATION)
(10) Install lower B-pillar trim panels as necessary. (Refer to 23 - BODY/INTERIOR/B-PILLAR LOWER TRIM - INSTALLATION)
(11) Install bolts attaching front seat belts to floor.
(12) Install amplifier on passenger side of floor pan, if equipped.
(13) Install front seats. (Refer to 23 - BODY/SEATS/SEAT - REMOVAL)
(14) Install rear seat cushion. (Refer to 23 - BODY/SEATS/SEAT CUSHION - INSTALLATION)
(15) Install the eight push pin fasteners into the door opening sills.
(16) Install door opening sill plates.

INSTALLATION - JR-27 ONLY

(1) Position carpet in vehicle (Fig. 4).
(2) Install push in fasteners from rear of carpet attaching carpet to rear seat crossmember.
(3) Install front seat push pin fasteners.
(4) Feed wiring connectors for the seats and amplifier, if equipped, through slits in carpet.
(5) Install plastic sill retainers in metal clips along door sill panel.
(6) Install wiring troughs attaching carpet at outboard ends of rear seat crossmember.
(7) Install amplifier on passenger side of floor pan, if so equipped.
(8) Install quarter trim panels.
(9) Install cowl trim panels.
(10) Install door sill trim panels.
(11) Install instrument panel hush panel.
(12) Install accelerator pedal.
(13) Install floor console and center instrument panel console.
(14) Install rear seat cushion.
(15) Install front seats.
(16) Raise and secure convertible top.

CENTER HEADER TRIM PANEL

REMOVAL

REMOVE

(1) Remove both sun visor support centers (Refer to 23 - BODY/INTERIOR/SUN VISOR - REMOVAL).

(2) Pull trim rearward to disengage clips attaching header trim panel to header panel (Fig. 5).

(3) Remove header trim panel from vehicle.

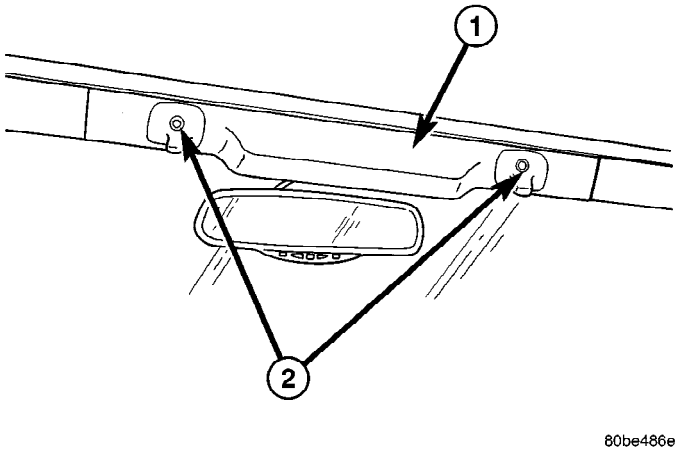

Fig. 5 Center Header Trim Panel

1 - CENTER HEADER TRIM PANEL
2 - SUN VISOR SUPPORT CENTER

INSTALLATION

(1) Position header trim panel on vehicle.

(2) Align the two locating pins on back of header trim panel to holes in header panel.

(3) Engage the two clips on header trim panel to slots in header panel.

(4) Attach the two sun visor support centers (Refer to 23 - BODY/INTERIOR/SUN VISOR - INSTALLATION).

COWL TRIM PANEL

REMOVAL

(1) Remove door sill trim panel.

(2) Remove screws attaching cowl trim panel to inner cowl panel.

(3) Remove cowl trim panel from vehicle (Fig. 6).

INSTALLATION

(1) Position cowl trim panel to vehicle.

(2) Install screws attaching cowl trim panel to inner cowl panel.

(3) Install door sill trim panel.

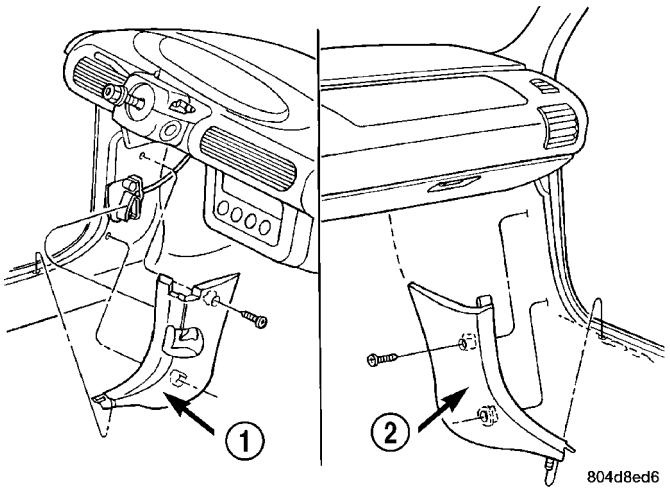

Fig. 6 Cowl Trim Panel

1 - LEFT COWL TRIM PANEL
2 - RIGHT COWL TRIM PANEL

DOOR SILL TRIM PANEL

REMOVAL

(1) Using a fork type prying tool, disengage clips holding door sill trim panel to door sill (Fig. 7).

(2) Starting at one end of sill trim panel, pull upward on sill trim panel in order to disengage clips attaching sill trim panel to door opening flange.

(3) Remove door sill trim panel from vehicle.

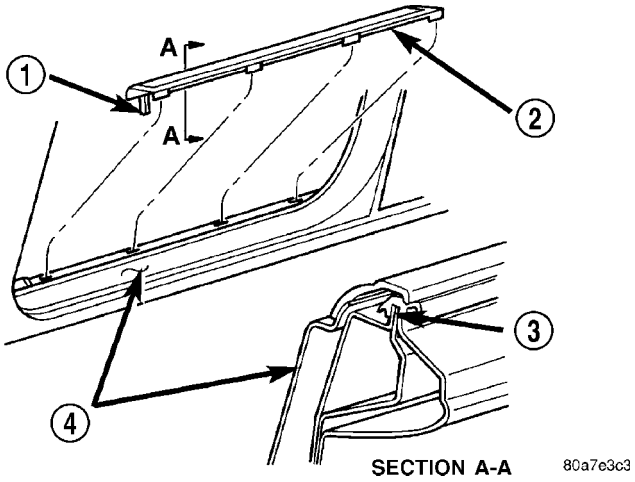

Fig. 7 Door Sill Trim Panel

1 - LOCATING TAB
2 - DOOR SILL TRIM PANEL
3 - DOOR OPENING FLANGE
4 - DOOR SILL

INSTALLATION

(1) Position door sill trim panel on vehicle.

(2) Align locating rib to net against cowl trim panel.

(3) Engage clips on sill trim panel to door opening flange.

DOOR SILL TRIM PANEL (Continued)

NOTE: Check that header/A-pillar and quarter panel weatherstrips are properly positioned. Incorrect positioning will interfere with clip engagement to door opening flange and damage door sill trim panel.

(4) Engage clips attaching sill trim panel to door sill.

FLOOR CONSOLE

REMOVAL

(1) Raise parking brake lever as high as possible.
(2) Move transmission shifter to neutral position.
(3) Loosen set screw on front of shifter knob and remove shift lever knob.
(4) Remove lighted transmission range indicator letter bezel (Fig. 8).
(5) Disconnect transmission range indicator bezel wire connector at the shifter mechanism.
(6) Remove screws, next to floor shifter and in console storage compartment, attaching floor console to brackets on floor pan (Fig. 9).
(7) Disconnect wire connector for floor console accessories at floor pan.
(8) Remove console from vehicle.

NOTE: The grip portion of the parking brake lever will only fit through the wider lower portion of the slot in the floor console.

INSTALLATION

(1) Position console in vehicle.
(2) Connect wire connector for floor console accessories at floor pan.
(3) Verify that the rear locator pin on the bottom of the storage bin is engaged to the slot in the body bracket and the front pin is engaged to the shift mechanism (Fig. 8).
(4) Install screws, next to floor shifter and in console storage compartment, holding floor console to brackets on floor pan.
(5) Connect transmission range indicator bezel wire connector on shifter mechanism.
(6) Install lighted transmission range indicator letter bezel.
(7) Install shift lever knob and tighten set screw on front of shifter knob.

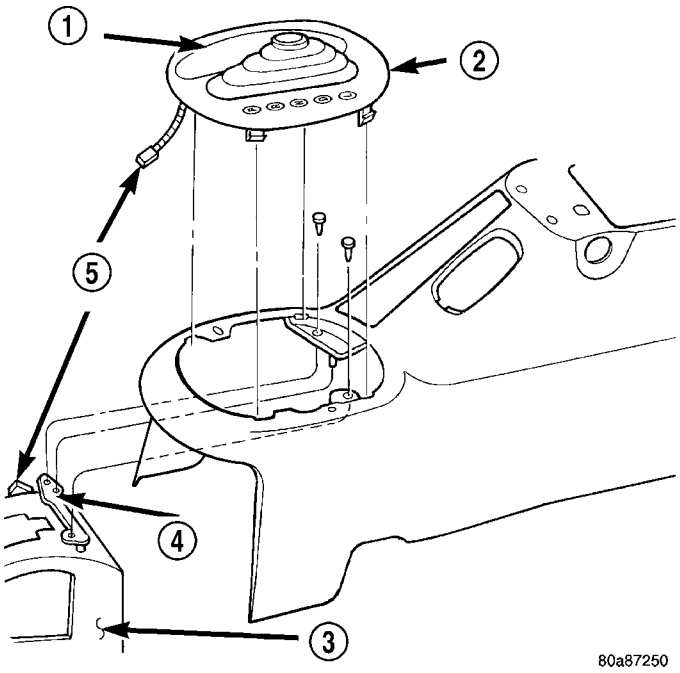

Fig. 8 Transmission Range Indicator Bezel

1 - BEZEL BOOT
2 - PRNDL BEZEL
3 - SHIFTER MECHANISM
4 - LOCATOR PIN
5 - WIRING CONNECTOR

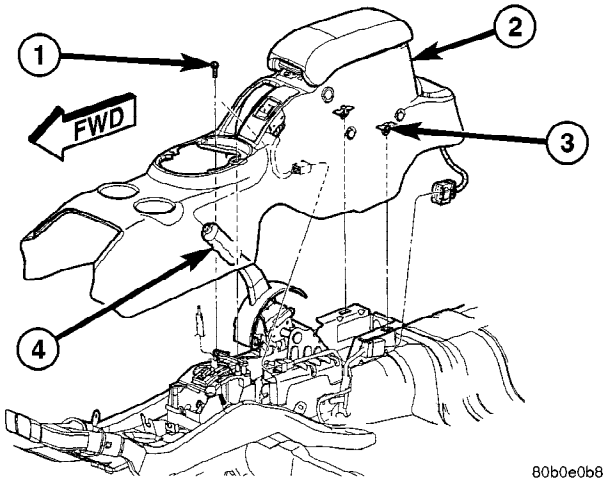

Fig. 9 FLOOR CONSOLE

1 - SCREWS
2 - FLOOR CONSOLE
3 - CLIPS
4 - PARK BRAKE LEVER

FORWARD INSTRUMENT PANEL CONSOLE

REMOVAL

(1) Remove floor console.
(2) Remove instrument panel cluster hood (Refer to 23 - BODY/INSTRUMENT PANEL/CLUSTER BEZEL - REMOVAL).
(3) Remove instrument panel center bezel.
(4) Remove left knee bolster.
(5) Release glove box door catches and allow to hang downward.
(6) Remove screws holding storage bin to forward instrument panel console (Fig. 10).
(7) Remove storage bin from forward instrument panel console.
(8) Remove screws holding forward instrument console to shifter mounting bracket.
(9) Remove screws attaching forward instrument panel console to instrument panel at sides of storage bin area.
(10) Remove screws attaching forward instrument panel console to instrument panel support braces.
(11) Remove forward instrument panel console from vehicle.

INSTALLATION

(1) Position forward instrument panel console to vehicle.
(2) Install screws attaching forward instrument panel console to instrument panel support braces.
(3) Install screws attaching forward instrument panel console to instrument panel at sides of storage bin area.
(4) Install screws attaching forward instrument panel console to shifter mounting bracket.
(5) Install storage bin from forward instrument panel console.
(6) Install screws attaching storage bin to forward instrument panel console.
(7) Release glove box door catches and allow to hang downward.
(8) Install left knee bolster.
(9) Install instrument panel center bezel.
(10) Install instrument panel cluster hood.
(11) Install floor console.

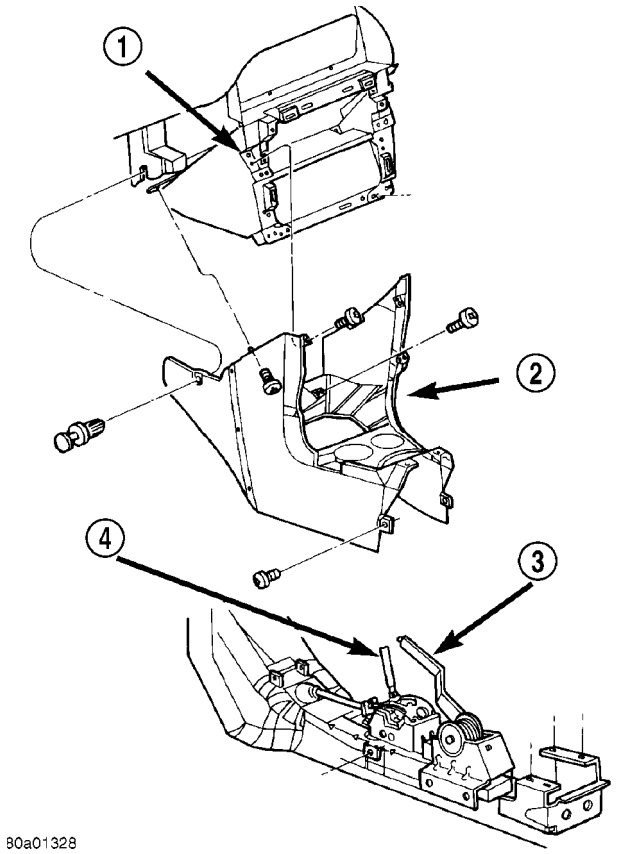

Fig. 10 Forward Instrument Panel Console

1 - INSTRUMENT PANEL
2 - FORWARD INSTRUMENT PANEL CONSOLE
3 - PARK BRAKE
4 - GEAR SHIFTER

HEADLINER

REMOVAL

CAUTION: Special Tool 6967 is needed to remove the rear locating clip attached to the headlining just forward of the rear window.

(1) Remove the door opening weatherstrips. (Refer to 23 - BODY/WEATHERSTRIP/SEALS/DOOR OPENING WEATHERSTRIP - REMOVAL)
(2) Remove instrument panel end cap/fuse cover.
(3) Remove the sun visors. (Refer to 23 - BODY/INTERIOR/SUN VISOR - REMOVAL)
(4) Remove sun visor supports. (Refer to 23 - BODY/INTERIOR/SUN VISOR SUPPORT - REMOVAL)
(5) Remove left A-pillar trim. (Refer to 23 - BODY/INTERIOR/A-PILLAR TRIM - REMOVAL)
(6) Remove front/rear assist handles and/or coat hooks.
(7) Remove right and left upper B-pillar trim. (Refer to 23 - BODY/INTERIOR/UPPER B-PILLAR TRIM - REMOVAL)
(8) Remove upper quarter trim, as necessary. (Refer to 23 - BODY/INTERIOR/UPPER QUARTER TRIM - REMOVAL)
(9) Disconnect headliner electrical connector along instrument panel bracket.
(10) Disconnect headliner electrical connector from fuse panel (Fig. 11).

HEADLINER (Continued)

(11) Pull down on the rear of the map lamp and sun roof switch to disengage clips from roof panel, if equipped.

(12) Using Special Tool 6967, disengage headline rear locating clip holding headlining to roof above rear window (Fig. 12).

(13) Pull down on headliner around sun roof to disengage hook and loop fastener, if equipped.

(14) Disconnect the sunroof module electrical connector, if equipped.

(15) Recline front seats.

(16) Tilt steering wheel fully up.

(17) Move shifter fully rearward.

(18) Lower headliner.

(19) Remove headliner through passenger front door opening.

INSTALLATION

NOTE: Do not remove the cardboard light blocker from the reading lamp.

(1) Transfer front map lamp and bracket.

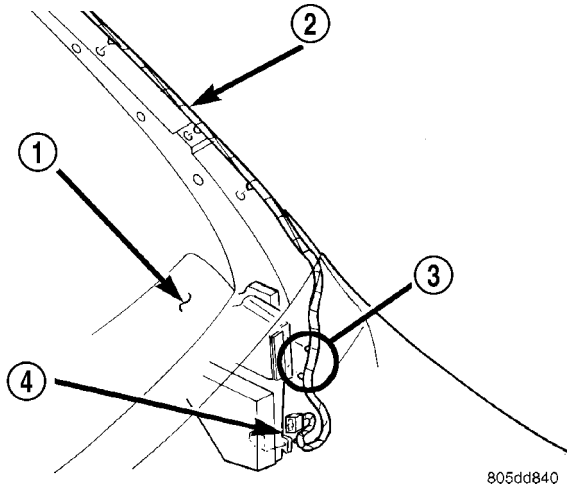

Fig. 11 Headlining Wiring

1 - INSTRUMENT PANEL
2 - LEFT A-PILLAR
3 - WRAP FASTENERS WITH FOAM
4 - FUSE PANEL

(2) Transfer sunroof switch.

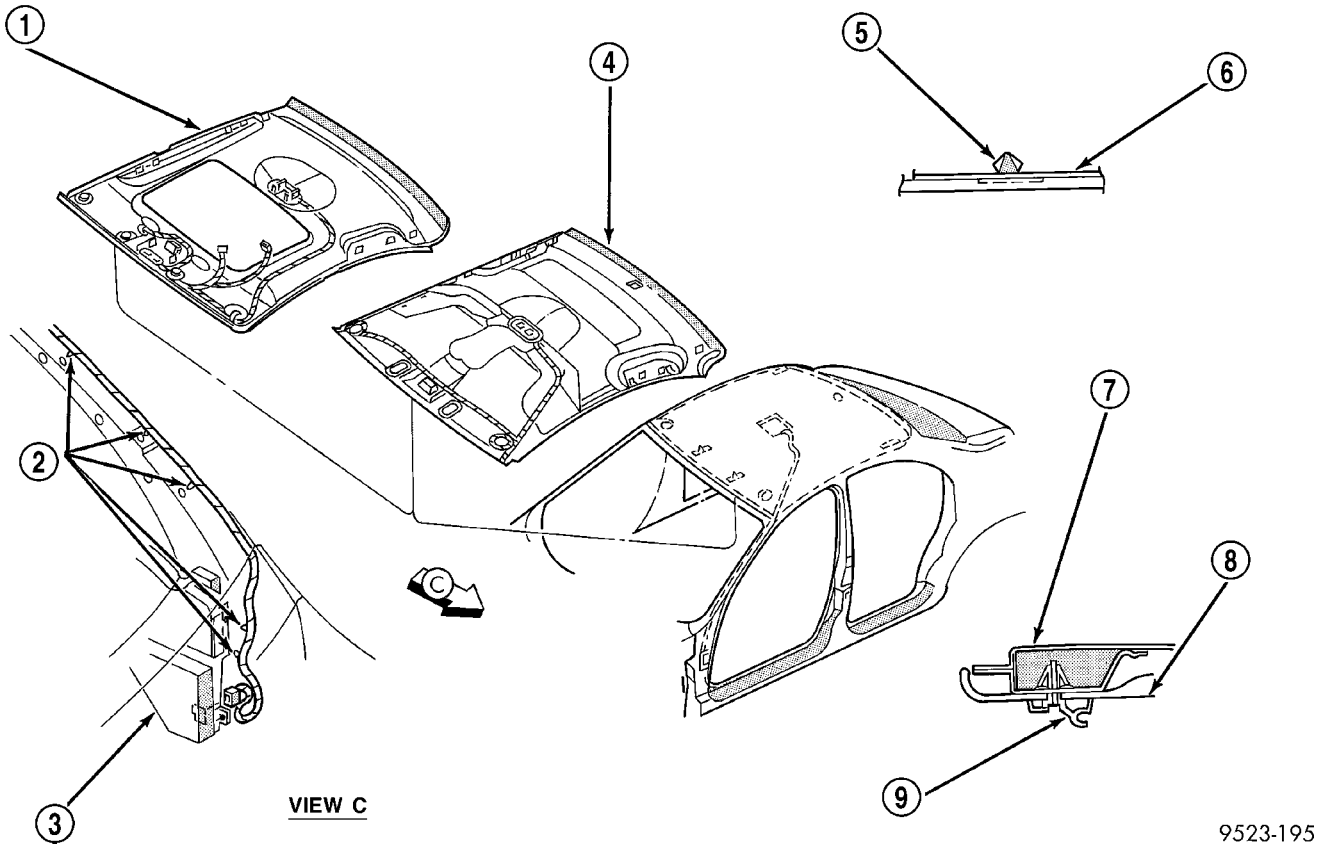

Fig. 12 Headlining

1 - HEADLINING W/SUNROOF
2 - PUSH-IN FASTENERS
3 - JUNCTION BLOCK
4 - HEADLINING
5 - CLIP
6 - REAR WINDOW HEADER
7 - WINDSHIELD HEADER
8 - HEADLINING
9 - SUNVISOR SUPPORT

HEADLINER (Continued)

(3) Transfer rear dome lamp.
(4) Fully recline both front seats.
(5) Tilt steering wheel fully up.
(6) Move shifter fully rearward.
(7) Move headliner into vehicle through front passenger door.
(8) Lay headlining wiring harness out along A–pillar to prevent capturing between headlining and roof.
(9) Install left inboard sun visor support.
(10) Align rear locator with mating hole in roof bow and press upward on headlining until rear locator engages.
(11) Install coat hooks.
(12) Install assist handles.
(13) Install sun visors. (Refer to 23 - BODY/INTERIOR/SUN VISOR - INSTALLATION)
(14) Connect electrical connector to sunroof switch, if equipped.
(15) Push upward on sunroof switch to engage into switch retainer, if equipped.
(16) Push upward on headlining around sunroof opening to engage hook and loop fasteners, if equipped.
(17) Connect map lamp electrical connector, if equipped.
(18) Confirm the headliner is not hung up on the side air bag deployment ramp.
(19) Push upward on map lamp to engage lamp to headlining, if equipped.
(20) Connect dome lamp wire connector to dome lamp.
(21) Install sunroof opening trim lace. (Refer to 23 - BODY/SUNROOF/OPENING TRIM LACE - INSTALLATION)
(22) Install headlining wiring harness to A–pillar and fuse panel.
(23) Install upper quarter trim as necessary. (Refer to 23 - BODY/INTERIOR/UPPER QUARTER TRIM - INSTALLATION)
(24) Install right and left B-pillar trim. (Refer to 23 - BODY/INTERIOR/UPPER B-PILLAR TRIM - INSTALLATION)

NOTE: It is not possible to reinstall the push in fasteners holding the wiring harness to the instrument panel bracket and to the fuse panel area. Wrap these two fasteners with foam tape to prevent buzz, squeak, and rattle complaints (Fig. 11).

(25) Install the A-pillar trim. (Refer to 23 - BODY/INTERIOR/A-PILLAR TRIM - INSTALLATION)
(26) Install the weatherstrip on to door opening. (Refer to 23 - BODY/WEATHERSTRIP/SEALS/DOOR OPENING WEATHERSTRIP - INSTALLATION)
(27) Verify that the door opening weatherstrip lip overlaps the edge of the headlining and trim panels.

HEADER TRIM PANEL - RIGHT OR LEFT

REMOVAL - JR-27 ONLY

(1) Remove sun visor(s) (Refer to 23 - BODY/INTERIOR/SUN VISOR - REMOVAL).
(2) Remove center header trim panel (Refer to 23 - BODY/INTERIOR/INTERIOR TRIM PANELS - REMOVAL).
(3) Disengage clip attaching header trim panel to header panel.
(4) Remove header trim panel from vehicle (Fig. 13).

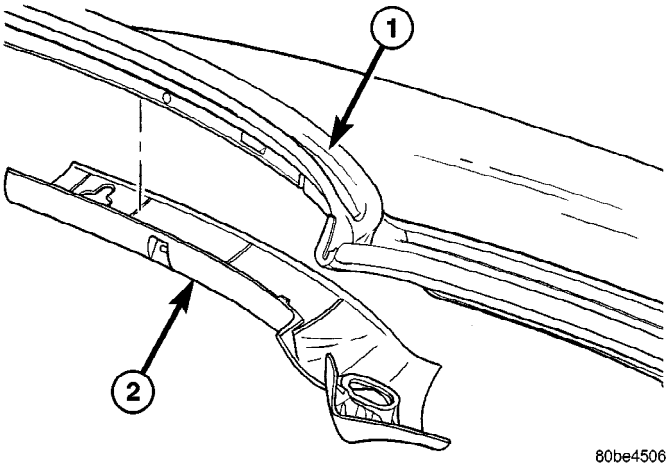

Fig. 13 Header Trim Panel (Right Side)

1 - HEADER WEATHERSTRIP
2 - HEADER TRIM PANEL

INSTALLATION - JR-27 ONLY

(1) Position header trim panel on vehicle.
(2) Align locating pins on back side of trim panel to holes in header panel.
(3) Engage clip on trim panel to slots in header panel.
(4) Install center header trim panel(Refer to 23 - BODY/INTERIOR/INTERIOR TRIM PANELS - INSTALLATION).
(5) Install sun visor (Refer to 23 - BODY/INTERIOR/INTERIOR TRIM PANELS - INSTALLATION).

LOWER QUARTER TRIM

REMOVAL

(1) Remove upper quarter trim panels. (Refer to 23 - BODY/INTERIOR/UPPER QUARTER TRIM - REMOVAL)

(2) Remove the puch pins from the lower quarter trim flange.

(3) Disengage the clips attaching the lower quarter trim to the body.

(4) Remove lower quarter trim from vehicle (Fig. 1).

INSTALLATION

(1) Place lower quarter trim into position.

(2) Engage the clips attaching the lower quarter trim to the body.

(3) Install the push pins into the lower quarter trim flange.

(4) Install the upper quarter trim panel. (Refer to 23 - BODY/INTERIOR/UPPER QUARTER TRIM - INSTALLATION)

QUARTER TRIM PANEL

REMOVAL

(1) Lower convertible top.

(2) Remove rear seat cushion and rear seat back.

(3) Remove door sill trim panel.

(4) Remove speaker grille (Fig. 14).

(5) Remove vertical screws and inboard screw attaching quarter trim panel to inner quarter panel (Fig. 15).

(6) Remove screws attaching quarter trim panel to inner quarter panel through the speaker opening.

(7) Lift metal retainer blade at the front out of clip.

(8) Pull trim panel from inner quarter panel and disconnect speaker wiring connector.

(9) Remove quarter trim panel from vehicle.

INSTALLATION

(1) Replace push in fasteners.

(2) Position quarter trim panel on vehicle.

(3) Connect speaker wiring connector.

(4) Install screws attaching quarter trim panel to inner quarter panel through the speaker opening.

(5) Install vertical screws and inboard screw attaching quarter trim panel to inner quarter panel.

(6) Place toe blade into slotted sill clip.

(7) Install door sill trim panel.

(8) Install speaker grille.

(9) Install rear seat cushion and rear seat back.

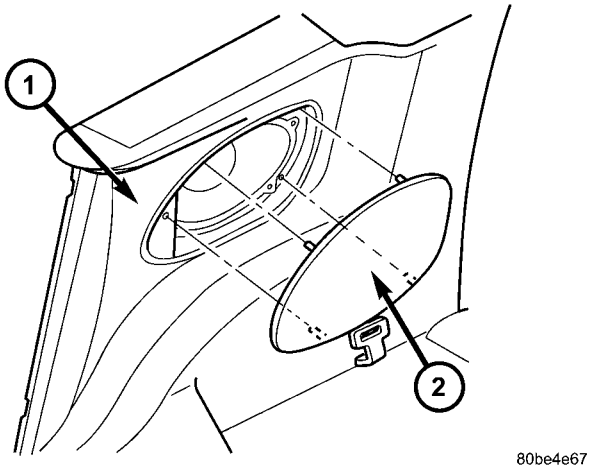

Fig. 14 Speaker Grille

1 - QUARTER TRIM PANEL
2 - SPEAKER GRILLE

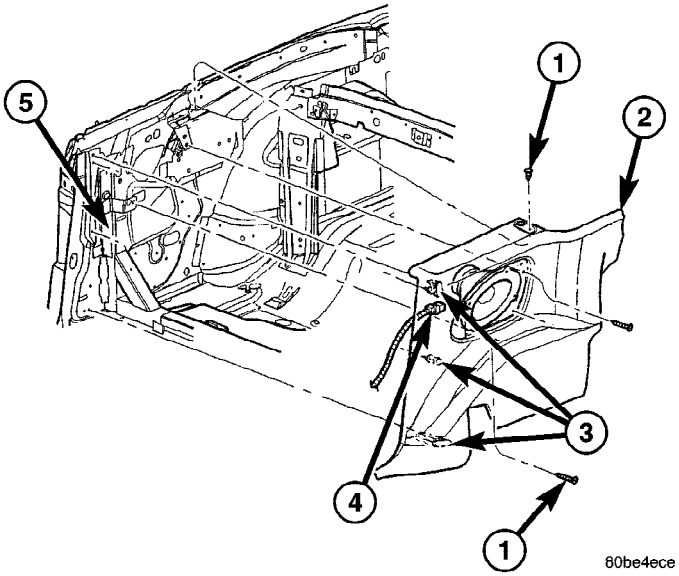

Fig. 15 Quarter Trim Panel

1 - SCREWS
2 - QUARTER TRIM PANEL
3 - LOCATING PINS
4 - SPEAKER WIRE AND CONNECTOR
5 - INNER QUARTER PANEL

REAR SHELF TRIM PANEL

REMOVAL

(1) Remove upper quarter trim panels as necessary. (Refer to 23 - BODY/INTERIOR/UPPER QUARTER TRIM - REMOVAL)
(2) Fold seat backs down.
(3) Remove the center plug (Fig. 16).
(4) Remove close out panel trim.
(5) Remove push-in fasteners attaching rear shelf trim to shelf panel (Fig. 17).
(6) Disconnect the center shoulder belt at the base. (Refer to 8 - ELECTRICAL/RESTRAINTS/SEAT BELT & RETRACTOR - REMOVAL)
(7) Pull trim forward to disengage clip attaching trim to shelf panel.
(8) Feed seat belt through the seat belt opening in the shelf panel.

CAUTION: Do not pull on child tether covers or use as a handle for removal of panel.

(9) Remove shelf trim from vehicle.

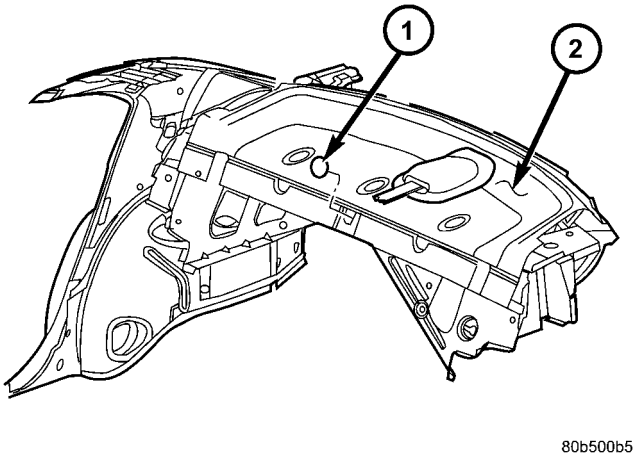

Fig. 16 REAR SHELF CENTER PLUG

1 - CENTER PLUG
2 - REAR SHELF TRIM

INSTALLATION

(1) Feed center shoulder belt through opening in shelf panel.

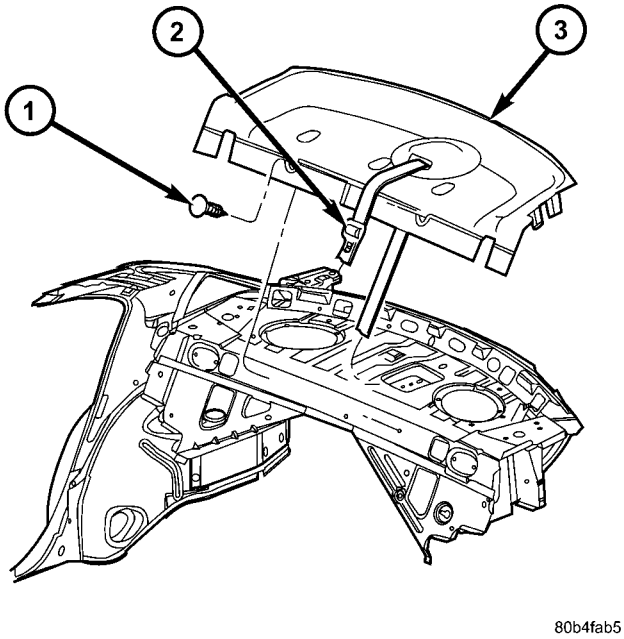

Fig. 17 REAR SHELF TRIM

1 - PUSH-IN FASTENERS
2 - CENTER SHOULDER BELT
3 - SHELF TRIM PANEL

(2) Place rear shelf trim into position.
(3) Push trim rearward to engage clip attaching rear shelf trim to shelf panel.
(4) Install push-in fasteners attaching rear shelf trim to shelf panel.

CAUTION: Do not pull on child tether covers or use as a handle for installation of panel.

(5) Install close out trim panel.
(6) Install center plug.
(7) Install upper quarter trim panels. (Refer to 23 - BODY/INTERIOR/UPPER QUARTER TRIM - INSTALLATION)
(8) Connect the center shoulder seat belt. (Refer to 8 - ELECTRICAL/RESTRAINTS/SEAT BELT & RETRACTOR - INSTALLATION)
(9) Fold seat backs up.

REAR VIEW MIRROR

REMOVAL

REMOVAL

(1) Remove screws attaching inside rear view mirror to header panel.

(2) Disconnect wire connector to rear view mirror, if so equipped.

(3) Remove rear view mirror from vehicle (Fig. 18)

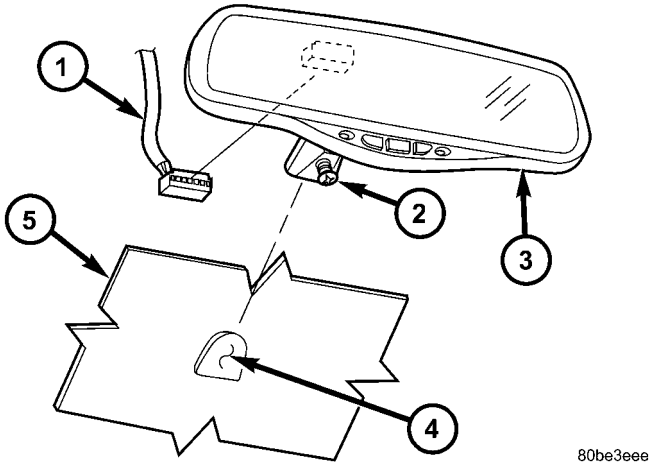

Fig. 18 Inside Rear View Mirror

1 - MIRROR WIRE CONNECTOR
2 - SET SCREW
3 - REAR VIEW MIRROR
4 - SUPPORT BUTTON
5 - WINDSHIELD

REMOVAL - JR-27 ONLY

All vehicles with driver and passenger side airbags must have a colored coded five Bullet point airbag warning label applied to the sun visor, verify label availability and ensure the label is installed.

(1) Disengage sun visor from sun visor support.

(2) Remove screws attaching sun visor to header panel.

(3) Disconnect lighted vanity mirror wiring.

(4) Remove sun visor from vehicle (Fig. 19).

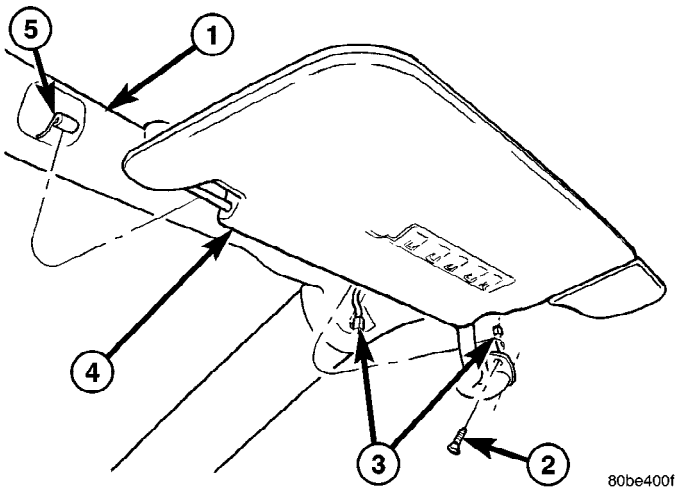

Fig. 19 Sun Visor

1 - Header Panel
2 - Attaching Screw(s)
3 - Vanity Wire Connectors
4 - Sun Visor
5 - Support Visor Center

INSTALLATION

INSTALLATION

(1) Position inside rear view mirror to vehicle.

(2) Connect wire connector to rear view mirror, if so equipped.

(3) Install screws attaching rear view mirror to header panel.

INSTALLATION - JR-27 ONLY

All vehicles with driver and passenger side airbags must have a colored coded five Bullet point airbag warning label applied to the sun visor, verify label availability and ensure the label is installed.

(1) Position sun visor to vehicle.

(2) Connect lighted vanity mirror wire connector.

(3) Install screws attaching sun visor to header panel.

(4) Engage sun visor to sun visor support.

SHIFT BOOT

REMOVAL

(1) Remove the shifter nob set screw and pull knob off of the shifter (Fig. 20).

(2) Using a trim stick C 4755 or equivalent, pop shift bezel boot assembly out of the floor console (Fig. 21).

(3) Disconnect the electrical connector, if equipped, and remove the shift boot.

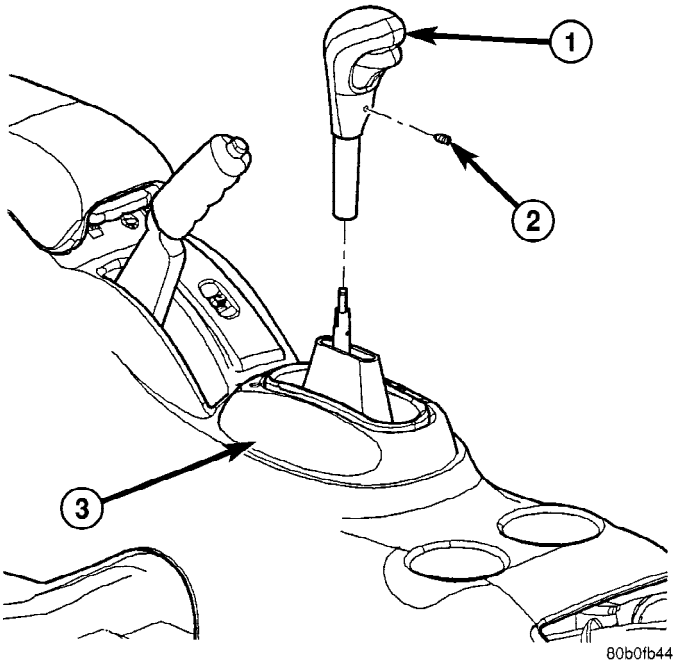

Fig. 20 SHIFT KNOB – AUTOMATIC TRANS

1 - SHIFTER KNOB
2 - SET SCREW

INSTALLATION

(1) Connect the electrical connector, if equipped.

(2) Slide the shift boot bezel over the shifter and install into the floor console.

(3) Install the shifter nob and tighten the set screw to 3 N·m (23 in. lbs.).

SUN VISOR

REMOVAL

(1) Disengage sun visor from center support (Fig. 22).

(2) Remove screws attaching sun visor to roof header.

(3) Remove sun visor from header.

(4) If equipped, disconnect wire connector from body harness.

(5) Remove sun visor from vehicle.

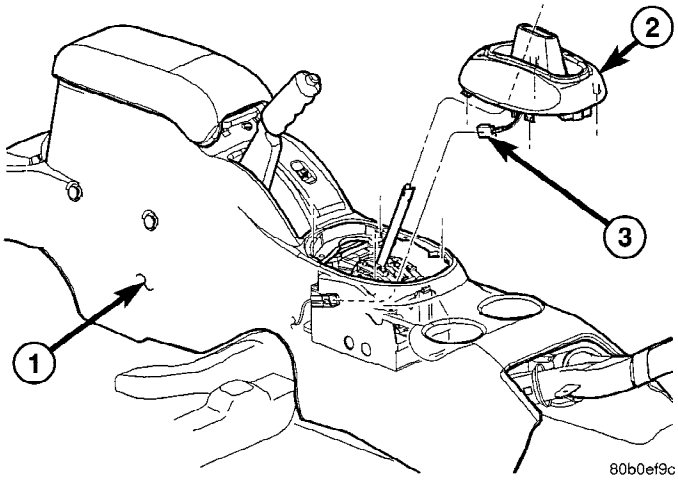

Fig. 21 SHIFT BOOT – TYPICAL

1 - FLOOR CONSOLE
2 - SHIFT BOOT
3 - ELECTRICAL CONNECTOR

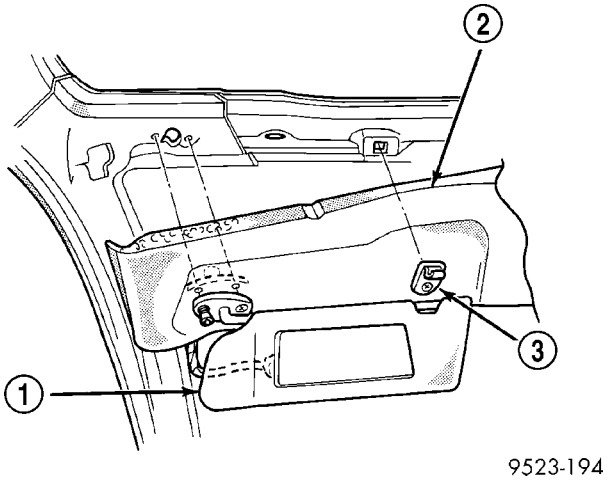

Fig. 22 Sun Visor

1 - SUN VISOR
2 - HEADLINING
3 - SUPPORT

INSTALLATION

(1) Place sun visor into position.

(2) If equipped, connect wire connector to body harness.

(3) Install screw attaching sun visor to header.

(4) Install screws attaching sun visor to roof header.

(5) Connect sun visor to center support.

SUN VISOR SUPPORT

REMOVAL

(1) Disengage sun visor from center support.
(2) Remove screw attaching support to roof header,
(3) Remove support from vehicle.

INSTALLATION

(1) Place support into position.
(2) Install screw attaching support to roof header,
(3) Engage sun visor to center support.

UPPER B-PILLAR TRIM

REMOVAL

(1) Remove the door opening weatherstrips. (Refer to 23 - BODY/WEATHERSTRIP/SEALS/DOOR OPENING WEATHERSTRIP - REMOVAL)
(2) Pry shoulder belt knob straight off height adjuster using a trim stick (C-4755).
(3) Remove seat belt turning loop cover.
(4) Remove bolt attaching turning loop to height adjuster.
(5) Remove bolt attaching seat belt lower anchor to floor.
(6) Disengage clips attaching upper B-pillar trim to B-pillar.
(7) Remove upper B-pillar trim from vehicle (Fig. 1).

INSTALLATION

(1) Place upper B-pillar trim into position.
(2) Engage clips attaching upper B-pillar trim to B-pillar.
(3) Install bolt attaching seat belt lower anchor to floor.
(4) Install bolt attaching turning loop to height adjuster.
(5) Install seat belt turning loop cover.
(6) Push shoulder belt knob straight on height adjuster.
(7) Install the door opening weatherstrips. (Refer to 23 - BODY/WEATHERSTRIP/SEALS/DOOR OPENING WEATHERSTRIP - INSTALLATION)

UPPER DECK MOLDING

REMOVAL

(1) Lower convertible top to midway position.
(2) Remove screws attaching upper deck molding to rear deck panel above convertible top rear attachment.
(3) Open decklid.
(4) Remove screws attaching upper deck molding to rear deck panel inside decklid water trough.
(5) Disconnect wire connector for CHMSL.
(6) Remove upper deck molding from vehicle.

INSTALLATION

(1) Position upper deck molding on vehicle.
(2) Connect wire connector for CHMSL.
(3) Install screws attaching upper deck molding to rear deck panel inside decklid water trough.
(4) Install screws attaching upper deck molding to rear deck panel above convertible top rear attachment.
(5) Raise and secure convertible top.

UPPER QUARTER TRIM

REMOVAL

(1) Remove the door opening weatherstrips as necessary. (Refer to 23 - BODY/WEATHERSTRIP/SEALS/DOOR OPENING WEATHERSTRIP - REMOVAL)
(2) Remove rear seat cushion. (Refer to 23 - BODY/SEATS/REAR SEAT CUSHION - REMOVAL)
(3) Remove bolt attaching rear seat belt anchor to floor. (Refer to 8 - ELECTRICAL/RESTRAINTS/SEAT BELT - REMOVAL)
(4) On vehicles equipped with a side curtain air bag, open the screw cap covers and remove the screws (Fig. 23).
(5) Fold the seat back down.
(6) Disengage clips attaching upper quarter trim to inner quarter panel (Fig. 23) and (Fig. 24).
(7) Route seat belt webbing through access hole in upper quarter trim.
(8) Remove upper quarter trim panel from vehicle.

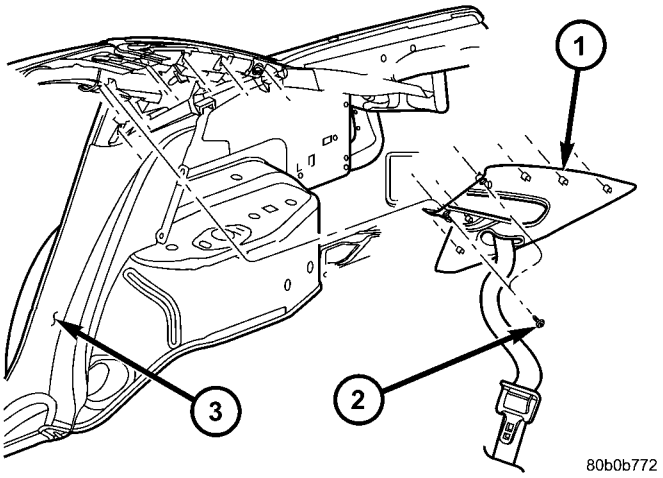

Fig. 23 UPPER QUARTER TRIM W/CURTAIN AIR BAG

1 - UPPER QUARTER TRIM PANEL
2 - SCREWS
3 - C-PILLAR LOWER

UPPER QUARTER TRIM (Continued)

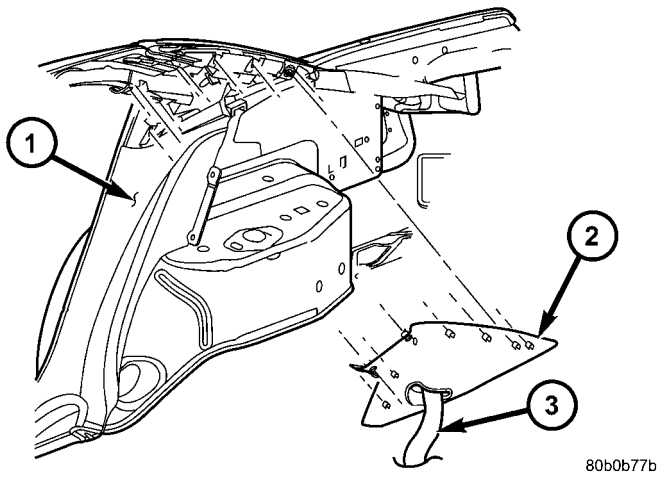

Fig. 24 UPPER QUARTER TRIM W/O CURTAIN AIR BAG

1 - C-PILLAR LOWER
2 - UPPER QUARTER TRIM PANEL
3 - SHOLDER BELT

INSTALLATION

(1) Place upper quarter trim panel into position.

(2) Route seat belt webbing through access hole in upper quarter trim.

(3) Engage clips attaching upper quarter trim to inner quarter panel.

(4) On vehicles equipped with side curtain air bag, install the screws and close the screw cap covers.

(5) Install bolt attaching rear seat belt anchor to floor. (Refer to 8 - ELECTRICAL/RESTRAINTS/ SEAT BELT - INSTALLATION)

(6) Install rear seat cushion. (Refer to 23 - BODY/ SEATS/REAR SEAT CUSHION - INSTALLATION)

(7) Install the door opening weatherstrips as necessary. (Refer to 23 - BODY/WEATHERSTRIP/ SEALS/DOOR OPENING WEATHERSTRIP - INSTALLATION)

WINDSHIELD HEADER DAMPER

REMOVAL

(1) Remove center header trim panel (Refer to 23 - BODY/INTERIOR/INTERIOR TRIM PANELS - REMOVAL).

(2) Remove nuts attaching damper (Fig. 25).

(3) Remove damper from vehicle.

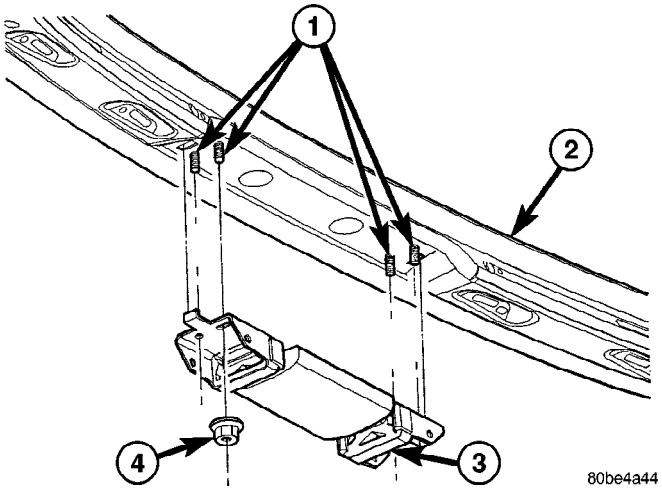

Fig. 25 Windshield Header Damper

1 - STUDS
2 - HEADER PANEL
3 - WINDSHIELD HEADER DAMPER
4 - NUT(S)

INSTALLATION

(1) Place windshield header damper in position.

(2) Install nuts attaching damper.

(3) Install center header trim panel into position (Refer to 23 - BODY/INTERIOR/INTERIOR TRIM PANELS - INSTALLATION).

PAINT

TABLE OF CONTENTS

page

PAINT
SPECIFICATIONS - COLOR CODE CHARTS . . 93
BASECOAT/CLEARCOAT FINISH
DESCRIPTION 94
PAINT CODE
DESCRIPTION 94
PAINTED SURFACE TOUCH-UP
DESCRIPTION 94
FINESSE SANDING/BUFFING AND POLISHING
DESCRIPTION 94

PAINT

SPECIFICATIONS - COLOR CODE CHARTS

EXTERIOR COLORS

EXTERIOR COLOR	DAIMLERCHRYSLER CODE	EXTERIOR COLOR	DAIMLERCHRYSLER CODE
DEEP LAVA RED PEARLCOAT	ZMQ	LIGHT ALMOND PEARL METALLIC CLEARCOAT	ZKJ
BRIGHT SILVER METALLIC CLEARCOAT	WS2	STEEL BLUE PEARLCOAT	XBQ
BRILLIANT BLACK CLEARCOAT	AXR	STERLING BLUE SATIN GLOW	YB2
DEEP SAPPHIRE BLUE CLEARCOAT	YBW	STONE WHITE CLEARCOAT	SW1
INFERNO RED TINTED PEARLCOAT	WEL	ONYX GREEN PEARLCOAT	YJR

INTERIOR COLORS

INTERIOR COLOR	DAIMLERCHRYSLER CODE	INTERIOR COLOR	DAIMLERCHRYSLER CODE
DARK SLATE GRAY	DV	SANDSTONE	T5
DEEP ROYAL BLUE COAT	BP	TAUPE	L5
DEEP ROYAL BLUE/CREAM COAT	BT		

BASECOAT/CLEARCOAT FINISH

DESCRIPTION

On most vehicles a two-part paint application (basecoat/clearcoat) is used. Color paint that is applied to primer is called basecoat. The clearcoat protects the basecoat from ultraviolet light and provides a durable high-gloss finish.

CAUTION: Do not use abrasive chemicals or compounds on painted surfaces. Damage to finish can result.
Do not use harsh alkaline based cleaning solvents on painted surfaces. Damage to finish or color can result.

PAINT CODE

DESCRIPTION

Exterior vehicle body colors are identified on the Body Code plate. (Refer to VEHICLE DATA/VEHICLE INFORMATION/BODY CODE PLATE - DESCRIPTION). The paint code is also identified on the Vehicle Safety Certification Label which is located on the drivers door shut face. The first digit of the paint code listed on the vehicle indicates the sequence of application, i.e.: P = primary coat, Q = secondary coat. The codes listed in the Color Code Chart are used for manufacturing purposes.

PAINTED SURFACE TOUCH-UP

DESCRIPTION

When a painted metal surface has been scratched or chipped, it should be touched up as soon as possible to avoid corrosion. For best results, use Mopar® Scratch Filler/Primer, Touch Up Paints and Clear Top Coat. (Refer to VEHICLE DATA/VEHICLE INFORMATION/BODY CODE PLATE - DESCRIPTION).

WARNING: USE AN OSHA APPROVED RESPIRATOR AND SAFETY GLASSES WHEN SPRAYING PAINT OR SOLVENTS IN A CONFINED AREA. PERSONAL INJURY CAN RESULT.

TOUCH UP PROCEDURE

(1) Scrape loose paint and corrosion from inside scratch or chip.

(2) Clean affected area with Mopar® Tar/Road Oil Remover, and allow to dry.

(3) Fill the inside of the scratch or chip with a coat of filler/primer. Do not overlap primer onto good surface finish. The applicator brush should be wet enough to puddle-fill the scratch or chip without running. Do not stroke brush applicator on body surface. Allow the filler/primer to dry hard.

(4) Cover the filler/primer with color touch up paint. Do not overlap touch up color onto the original color coat around the scratch or chip. Butt the new color to the original color, if possible. Do not stroke applicator brush on body surface. Allow touch up paint to dry hard.

(5) On vehicles without clearcoat, the touch up color can be lightly finesse sanded (1500 grit) and polished with rubbing compound.

(6) On vehicles with clearcoat, apply clear top coat to touch up paint with the same technique as described in Step 4. Allow clear top coat to dry hard. If desired, Step 5 can be performed on clear top coat.

WARNING: AVOID PROLONGED SKIN CONTACT WITH PETROLEUM OR ALCOHOL – BASED CLEANING SOLVENTS. PERSONAL INJURY CAN RESULT.

FINESSE SANDING/BUFFING AND POLISHING

DESCRIPTION

Minor acid etching, orange peel, or smudging in clearcoat or single-stage finishes can be reduced with light finesse sanding, hand buffing, and polishing. **If the finish has been finesse sanded in the past, it cannot be repeated. Finesse sanding operation should be performed by a trained automotive paint technician.**

CAUTION: Do not remove clearcoat finish, if equipped. Basecoat paint must retain clearcoat for durability.

ADJUSTABLE QUARTER GLASS JR-27

TABLE OF CONTENTS

page

ADJUSTABLE QUARTER GLASS JR-27
REMOVAL 95
INSTALLATION 95

page

ADJUSTMENTS
QUARTER GLASS ADJUSTMENT 96

ADJUSTABLE QUARTER GLASS JR-27

REMOVAL

(1) Raise quarter glass to full up position, if possible, to aid in removal.
(2) Remove quarter trim panel.
(3) Partially lower convertible top.
(4) Disconnect wire connector to power window motor.
(5) Remove fasteners holding quarter window module to inner quarter panel (Fig. 1).
(6) Lift quarter window module upward and out opening at top of quarter panel.
(7) Separate quarter glass from quarter window module (Fig. 2).

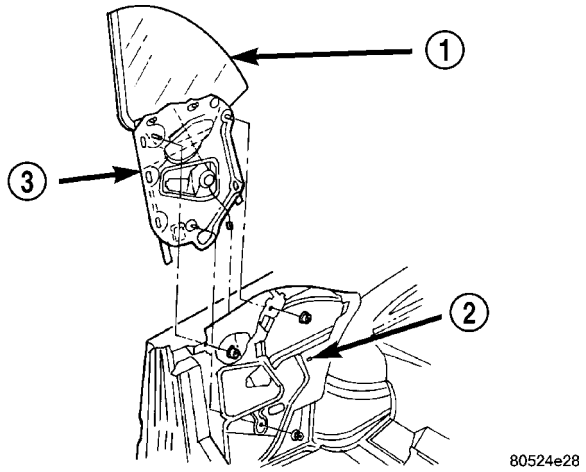

Fig. 1 Quarter Window Module

1 - QUARTER GLASS
2 - INNER QUARTER PANEL
3 - QUARTER WINDOW MODULE

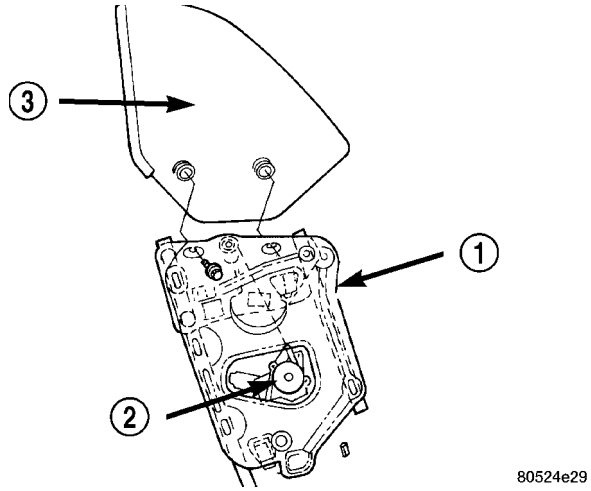

Fig. 2 Quarter Glass

1 - QUARTER WINDOW MODULE
2 - POWER QUARTER WINDOW MOTOR
3 - QUARTER GLASS

INSTALLATION

(1) Lower quarter window module into position through opening in top of quarter panel.
(2) Install fasteners holding quarter window module to inner quarter panel.
(3) Connect wire connector to power window motor.
(4) Raise glass lift channel to full up position.
(5) Position quarter glass on quarter window module.
(6) Loosely install fasteners holding quarter glass to quarter window module.
(7) Lower and secure convertible top.
(8) Adjust quarter glass as necessary (Refer to 23 - BODY/ADJUSTABLE QUARTER GLASS - ADJUSTMENTS).
(9) Install quarter trim panel.

ADJUSTABLE QUARTER GLASS JR-27 (Continued)

ADJUSTMENTS

QUARTER GLASS ADJUSTMENT

NOTE: The door glass must be properly adjusted prior to performing any quarter glass adjustments. (Refer to 23 - BODY/DOOR - FRONT/DOOR GLASS - ADJUSTMENTS)

UP-STOP ADJUSTMENTS

NOTE: Up-stop nuts are behind the quarter panel speakers, and can be accessed without removing the trim panel.

(1) Remove the speaker cover, speaker and speaker cup, if equipped. Peel back the sealing patch to access forward up-stop. (Fig. 3)

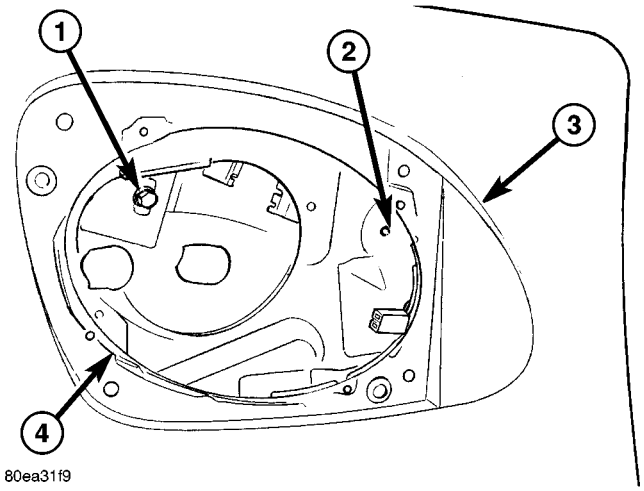

Fig. 3 UP STOP ADJUSTMENTS

1 - REAR UP STOP BOLT
2 - FRONT UP STOP BOLT
3 - QUARTER TRIM PANEL
4 - SPEAKER OPENING

(2) Remove center and rear side rail weatherstrips from side rail weatherstrip retainer channels.
(3) Loosen up-stop nuts.
(4) Raise quarter glass.
(5) Slide up-stop to achieve proper glass to weatherstrip retainer gap. (Fig. 4)
(6) Tighten all fasteners.
(7) Install center and rear side rail weatherstrips to side rail weatherstrip retainer channels.
(8) Cycle quarter glass between full up and full down positions. Verify operation and adjust as necessary.
(9) Verify that the top edge of the door glass is beneath the lip of the weatherstrip.
(10) Re-apply the sealing patch. Install the speaker cup, speaker and speaker cover.

BOTTOM OF GLASS – INBOARD/OUTBOARD ADJUSTMENTS

(1) Remove the speaker cover, speaker and speaker cup, if equipped.
(2) Using a suitable offset wrench, loosen the upper forward jack screw set nut. (Fig. 5)
(3) Using a suitable allen wrench (Fig. 6), rotate the jack-screw to achieve the proper gap between the door glass and the quarter glass seal (Fig. 4). Tighten all fasteners prior to measuring the gaps.
(4) Install speaker cup, if equipped, speaker and cover.

TOP OF GLASS – INBOARD/OUTBOARD ADJUSTMENTS

(1) Remove quarter trim panel. (Refer to 23 - BODY/INTERIOR/QUARTER PANEL TRIM - REMOVAL)

NOTE: Alternatively, the lower adjustment can be accessed through a hole at the bottom of the quarter trim panel. This hole can be located by removing the rear seat cushion. (Refer to 23 - BODY/SEATS/SEAT CUSHION - REMOVAL)

(2) Remove center and rear side rail weatherstrips from side rail weatherstrip retainer channels.
(3) Using a suitable wrench, loosen the lower jack screw jam nuts.
(4) Raise quarter glass.
(5) Using a suitable allen wrench, rotate jack-screws to achieve the proper gap between the door glass weatherstrip retainer channel. (Fig. 4)
(6) Verify that the quarter glass maintains even contact with the outer belt weatherstrip.
(7) Install center and rear side rail weatherstrips to side rail weatherstrip retainer channels.
(8) Cycle quarter glass between full up and full down positions. Verify operation and adjust as necessary.
(9) Tighten all fasteners.
(10) Verify that the top edge of the door glass is beneath the lip of the weatherstrip with glass in the full up position.
(11) Install quarter trim panel. (Refer to 23 - BODY/INTERIOR/QUARTER PANEL TRIM - INSTALLATION)

GLASS – FRONT/REAR ADJUSTMENT

(1) Remove quarter trim panel. (Refer to 23 - BODY/INTERIOR/QUARTER PANEL TRIM - REMOVAL)
(2) Remove center and rear side rail weatherstrips from side rail weatherstrip retainer channels.
(3) Loosen glass attachment bolts.

ADJUSTABLE QUARTER GLASS JR-27 (Continued)

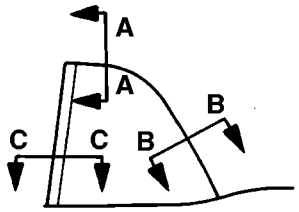

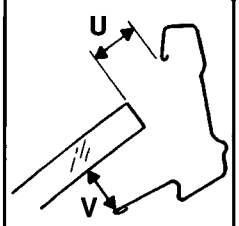

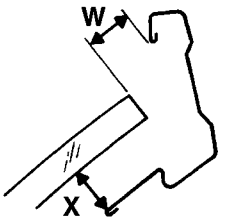

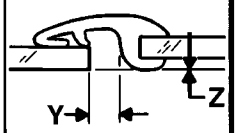

SEQUENCE		ADJUSTMENT	MEASUREMENT LOCATIONS AND THEIR VALUES					
			SECTION A-A		SECTION B-B		SECTION C-C	
			U	V	W	X	Y	Z
1	IN/OUT			20.0mm ±2mm		20.0mm ±2mm		FLUSH ±1mm
2	FORWARD/ REARWARD	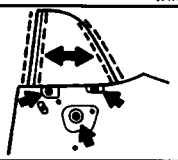	10.0mm ±2mm		10.0mm ±3mm		4.0mm ±1mm	
	UP/DOWN	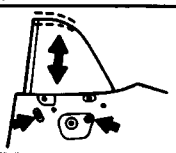	10.0mm ±2mm		10.0mm ±3mm			

NOTE: Forward / Rearward and Up/Down adjustment are to be made at the same time.

808fe939

Fig. 4 QUARTER GLASS ADJUSTMENT SPECIFICATIONS

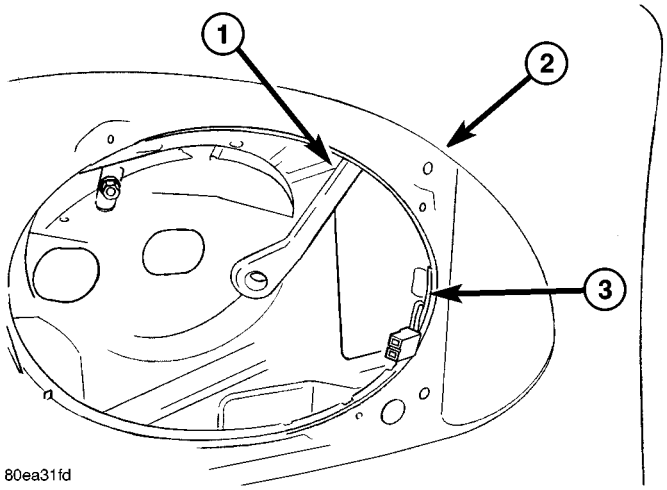

Fig. 5 FORWARD JACK SCREW ADJUSTMENT

1 - JACK SCREW ADJUSTMENT
2 - QUARTER TRIM PANEL
3 - SPEAKER OPENING

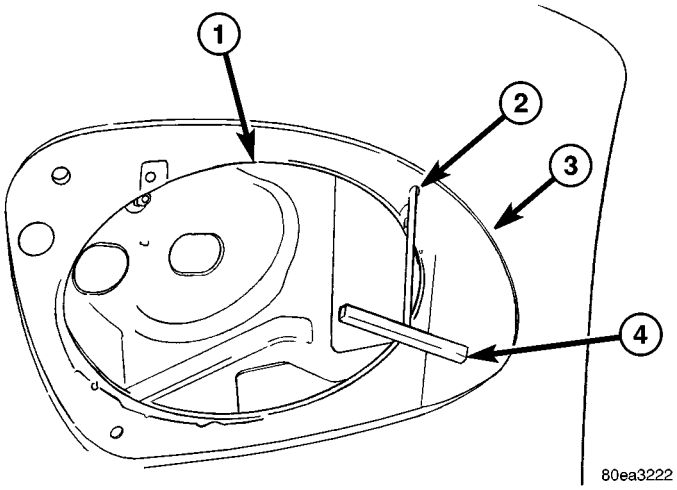

Fig. 6 IN/OUT ALLEN ADJUSTMENT

1 - SPEAKER OPENING
2 - TRIM PANEL HOLE
3 - QUARTER TRIM PANEL
4 - ALLEN WRENCH

(4) Raise quarter glass and position correctly. (Fig. 4)

(5) Tighten all fasteners.

(6) Install center and rear side rail weatherstrips to side rail weatherstrip retainer channels.

(7) Cycle quarter glass between full up and full down positions. Verify operation and adjust as necessary.

(8) Install quarter trim panel. (Refer to 23 - BODY/INTERIOR/QUARTER PANEL TRIM - INSTALLATION)

ADJUSTABLE QUARTER GLASS JR-27 (Continued)

QUARTER GLASS ALIGNMENT VERIFICATION

(1) Raise door glass to full up position.

(2) Cycle quarter glass between full up and full down positions.

(3) Verify that quarter glass operates smoothly and maintains correct alignment to convertible top and door glass.

NOTE: The alignment to door glass can be checked with the "paper strip test". Place a piece of paper on the quarter glass seal and close the door. Slide the paper along the length of the seal - there should be some resistance to pulling the paper out. (Fig. 7)

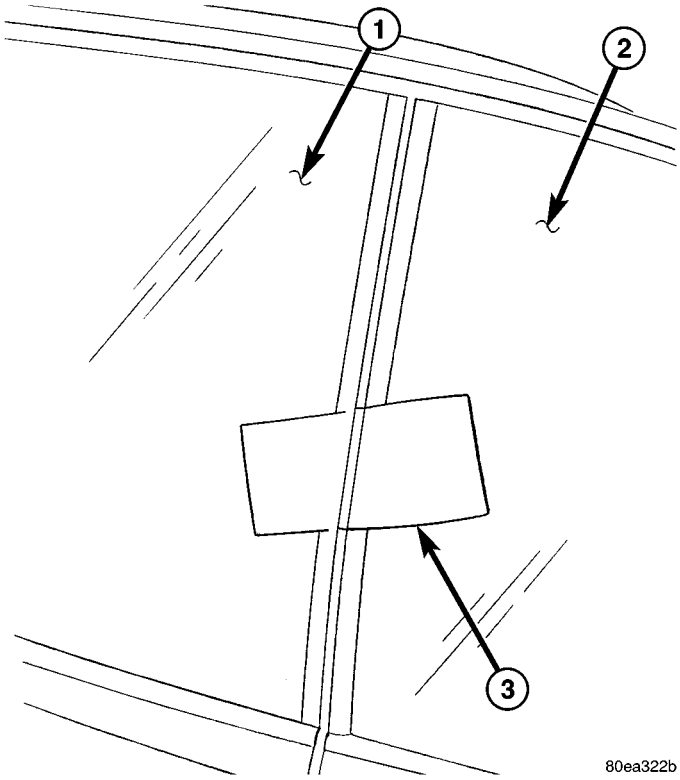

Fig. 7 QUARTER GLASS ADJUSTMENT VERIFICATION

1 - DOOR GLASS
2 - QUARTER GLASS
3 - PAPER STRIP

(4) Verify that quarter glass weatherstrip fully contacts door glass.

(5) Verify that no scissoring of the door glass and weatherstrip occurs.

(6) If any of the above conditions are found,

(a) Adjust quarter glass.

(b) Adjust the door glass as necessary to cure the condition.

SEATS

TABLE OF CONTENTS

page

HEADREST
REMOVAL 100
INSTALLATION 100
FRONT SEAT
DESCRIPTION - JR-27 ONLY 100
REMOVAL
REMOVAL 102
REMOVAL - MANUAL - JR-27 ONLY 102
REMOVAL - POWER - JR-27 102
INSTALLATION
INSTALLATION 103
INSTALLATION - MANUAL - JR-27 103
INSTALLATION - POWER - JR-27 ONLY . . . 103
FRONT SEAT BACK
REMOVAL
REMOVAL 104
REMOVAL - JR-27 ONLY 104
INSTALLATION
INSTALLATION 105
INSTALLATION - JR-27 ONLY 105
FRONT SEAT BACK COVER
REMOVAL
REMOVAL 106
REMOVAL - JR-27 ONLY 106
INSTALLATION
INSTALLATION 108
INSTALLATION - JR-27 ONLY 108
FRONT SEAT CUSHION SIDE SHIELDS
REMOVAL
REMOVAL 108
REMOVAL - JR-27 ONLY 108
INSTALLATION
INSTALLATION 109
INSTALLATION - JR-27 ONLY 109
FRONT SEAT CUSHION
REMOVAL - FRONT 109
INSTALLATION - FRONT 109
FRONT SEAT CUSHION COVER
REMOVAL - FRONT SEAT CUSHION COVER . 110
INSTALLATION - FRONT SEAT CUSHION COVER 110
REAR SEAT
DESCRIPTION 111
REAR SEAT CUSHION
REMOVAL
REMOVAL - REAR 112
REMOVAL - JR-27 ONLY 112
INSTALLATION
INSTALLATION - REAR 112
INSTALLATION - JR-27 ONLY 112
REAR SEAT CUSHION COVER
REMOVAL
REMOVAL - REAR SEAT CUSHION COVER . 113
REMOVAL - JR-27 ONLY 113
INSTALLATION
INSTALLATION - REAR SEAT CUSHION COVER 113
INSTALLATION - JR-27 ONLY 113
REAR SEAT BACK
REMOVAL
REMOVAL - FOLDING BACK 114
REMOVAL - JR-27 ONLY 114
INSTALLATION
INSTALLATION - FOLDING BACK 114
INSTALLATION - JR-27 ONLY 114
REAR SEAT BACK COVER
REMOVAL - JR-27 ONLY 115
INSTALLATION - JR-27 ONLY 115
SEAT ADJUSTERS
REMOVAL
REMOVAL - FRONT SEAT ADJUSTER – POWER 115
REMOVAL - MANUAL ADJUSTER 115
INSTALLATION
INSTALLATION - FRONT SEAT ADJUSTER – POWER 115
INSTALLATION - MANUAL ADJUSTER 116
SEAT BACK LATCH STRIKER
REMOVAL 116
INSTALLATION 116
SEAT BACK RECLINER
REMOVAL
REMOVAL 116
REMOVAL - JR-27 ONLY 116
INSTALLATION
INSTALLATION 117
INSTALLATION - JR-27 ONLY 117

HEADREST

REMOVAL

(1) Raise head restraint slightly.

(2) Insert a stiff wire into the hole on the right hand side head restraint sleeve/guide and push to release latch (Fig. 1).

(3) At the same time, press the button on the head restraint sleeve/guide left hand side and pull upward to release the head restraint.

(4) Remove head restraint from seat back.

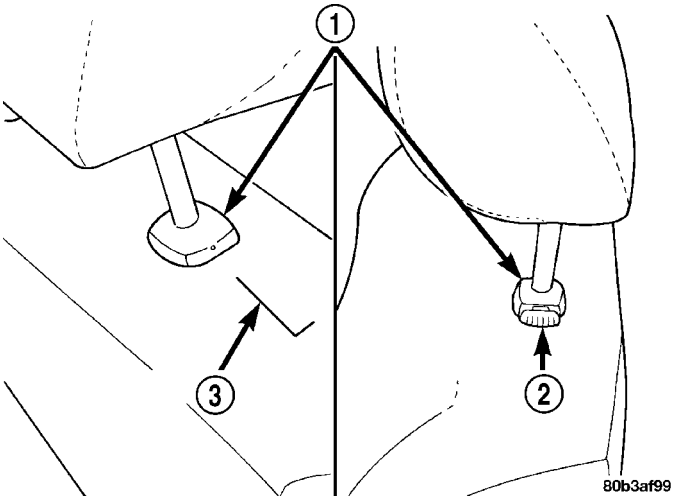

Fig. 1 Head Restraint Removal

1 - SLEEVE GUIDE
2 - BUTTON
3 - STIFF WIRE

INSTALLATION

(1) Place head restraint in position.

(2) Push head restraint down into the lock position.

(3) Raise head restraint to ensure it locks at the last stop.

FRONT SEAT

DESCRIPTION - JR-27 ONLY

Refer to (Fig. 2) for more information while servicing the front seat.

FRONT SEAT (Continued)

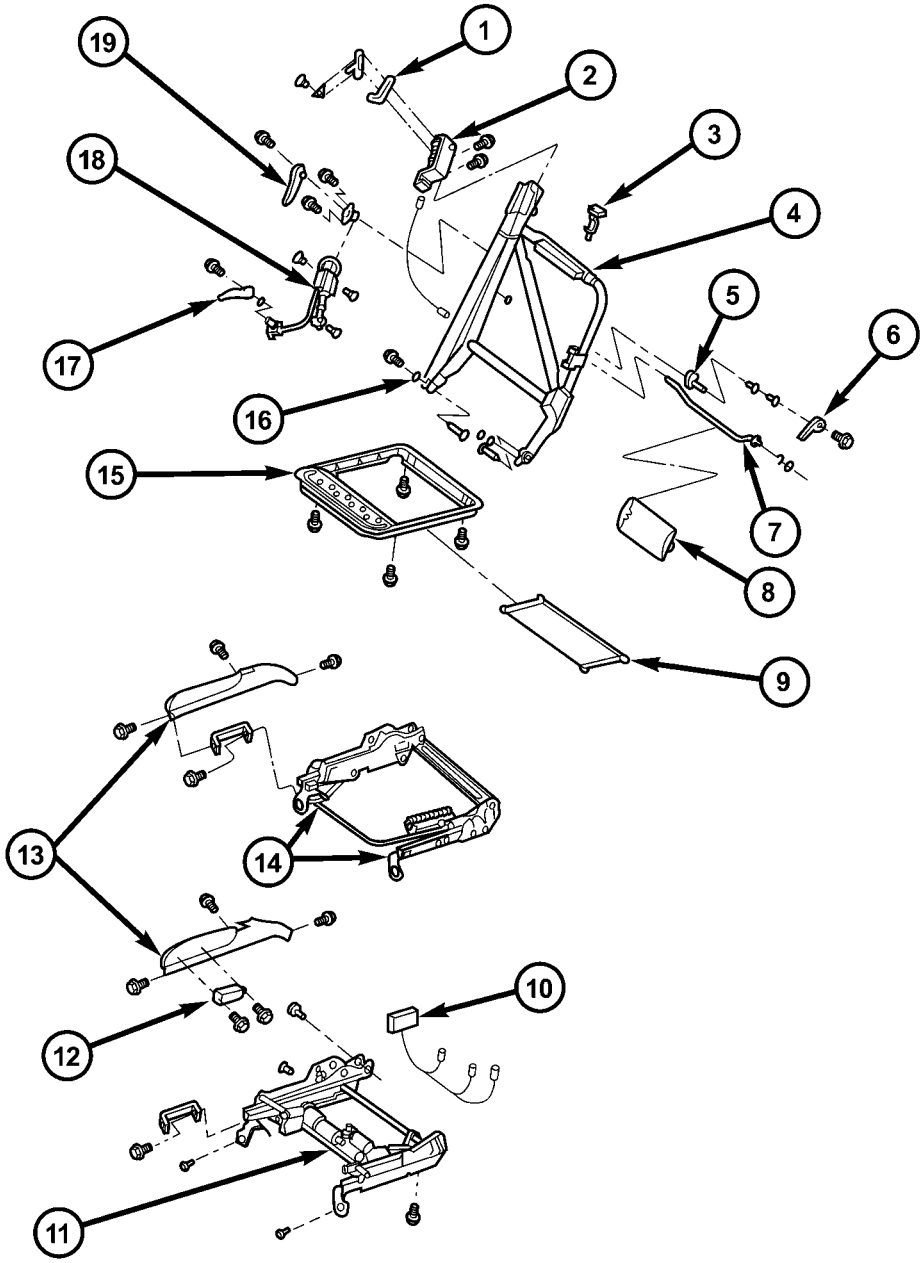

Fig. 2 Front Seat Exploded View

1 - SEAT BELT TRIM BEZEL
2 - SEAT BELT RETRACTOR
3 - HEADREST SLEEVE
4 - SEAT BACK FRAME ASSEMBLY
5 - LUMBAR CAM ASSEMBLY
6 - LUMBAR HANDLE
7 - LUMBAR ROD ASSEMBLY
8 - LUMBAR BACKREST
9 - SEAT SUSPENSION
10 - POWER SEAT WIRING HARNESS
11 - POWER SEAT ADJUSTER ASSEMBLY
12 - POWER SEAT SWITCH
13 - SEAT SIDE SHIELD
14 - MANUAL SEAT ADJUSTER ASSEMBLY
15 - CUSHION FRAME ASSEMBLY
16 - MEMORY DUMP CAM
17 - LOWER RECLINER HANDLE
18 - RECLINER ASSEMBLY
19 - UPPER RECLINER HANDLE

FRONT SEAT (Continued)

REMOVAL

REMOVAL

(1) Position seat far enough forward to gain access to rear mount bolts on floor.

(2) Remove bolts holding rear of seat track to floor (Fig. 3).

(3) Slide seat rearward.

(4) Remove bolts attaching front of the seat track to floor kick up.

(5) Disconnect negative battery cable, if electrical seat.

(6) Disconnect front seat wire harness connector from body harness connector.

CAUTION: Caution should be taken not to handle seat by adjuster release bar when removing spring loaded seat from vehicle.

(7) Remove front seat from vehicle.

REMOVAL - MANUAL - JR-27 ONLY

(1) Move seat to full forward position.

(2) Remove rear inboard bolt attaching seat to floor pan.

(3) Remove rear outboard bolts attaching seat to side sill pylon.

(4) Position seat in full rearward position.

(5) Remove front inboard and outboard bolts holding seat to floor pan crossmember (Fig. 4).

(6) Tilt seat rearward and disconnect seat belt pretensioner wire connector.

(7) Remove seat from vehicle.

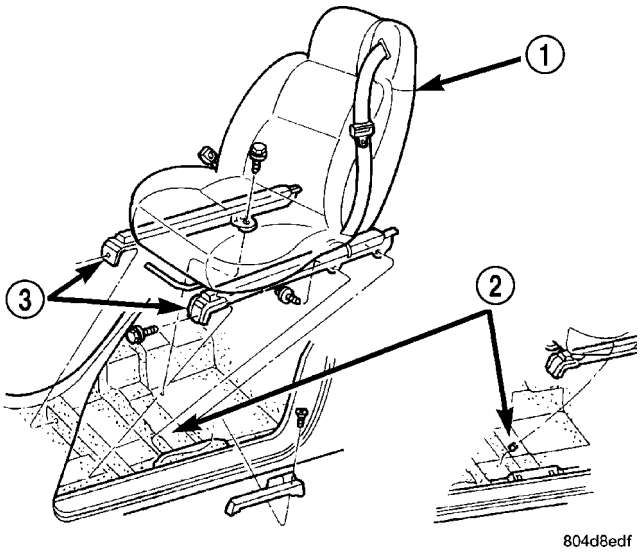

Fig. 4 Front Seat

1 - FRONT SEAT
2 - FLOOR PAN CROSSMEMBER
3 - FRONT SEAT TRACK

REMOVAL - POWER - JR-27

(1) Move seat to full forward position.

(2) Remove rear inboard bolt attaching seat to floor pan.

(3) Remove rear outboard bolts attaching seat to side sill pylon.

(4) Position seat in full rearward position.

(5) Remove front inboard and outboard bolts attaching seat to floor pan crossmember (Fig. 4).

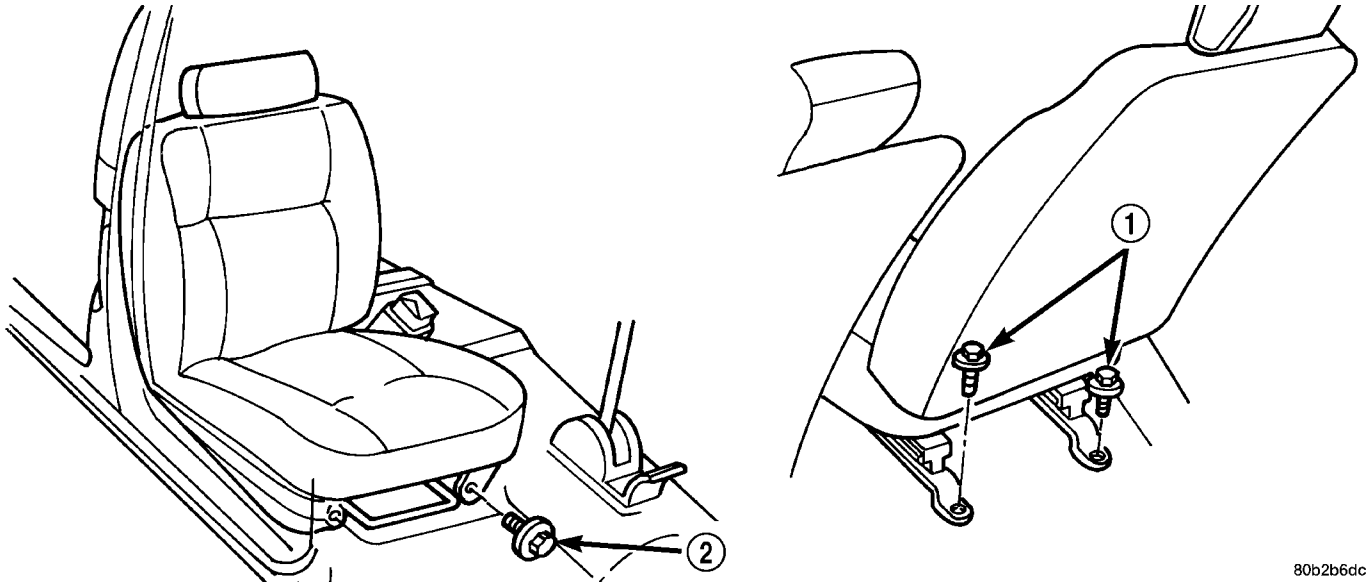

Fig. 3 Front Seat Removal

1 - REAR BOLTS
2 - FRONT BOLTS

FRONT SEAT (Continued)

(6) Tilt seat rearward and disconnect wire connector to seat belt pretensioner and power seat mechanism.

(7) Remove seat from vehicle.

INSTALLATION

INSTALLATION

CAUTION: Do not handle by seat adjuster release bar.

NOTE: Ensure that the seat tracks are rearward. Ensure the seat tracks on the right and left are in equal latch positions.

(1) Place front seat in position in vehicle.

(2) Connect front seat wire harness connector to body harness connector.

(3) Install bolts to attach front of seat track to the floor kick up. Tighten bolts to 61 N·m (45 ft. lbs.) torque.

(4) Slide seat forward and install bolts attaching rear of seat track to the floor. Tighten bolts to 61 N·m (45 ft. lbs.) torque.

(5) Verify front seat operation.

INSTALLATION - MANUAL - JR-27

CAUTION: It is important that the following steps be done correctly to insure that the seat tracks are properly timed prior to securing the seats to the vehicle.

(1) Adjust seat back to vertical position using either recliner handle.

WARNING: DO NOT GRAB EITHER RECLINER HANDLE OR TOWEL BAR WHEN HANDLING SEAT. THE SEAT TRACKS ARE SPRING LOADED AND WILL RELEASE.

(2) Turn seat upside down so that the seat tracks can be seen.

(3) Securely grasp the spring loaded outboard track rail and while lifting the towel bar, position the lower rail so that it is locked in the forth hole from the end (Fig. 5).

(4) Position the inboard seat track rail so that it is identical to the outboard track lower rail.

(5) Return seat to upright position.

(6) Position seat in vehicle.

(7) Tilt seat rearward and connect wire connector to seat belt pretensioner.

(8) Push downward on seat cushion to ensure that the front mounting brackets are fully seated to floor pan crossmember.

(9) Install and tighten rear outboard bolt seat to side sill pylon.

(10) Install and tighten forward outboard bolt attaching seat to crossmember.

(11) Install and tighten forward inboard bolt attaching seat to crossmember.

(12) Move seat to full forward position. Push rearward slightly on seat to ensure that the adjuster latches are engaged on both seat tracks.

(13) Install and tighten rear inboard bolt attaching seat to floor pan.

(14) Install and tighten middle outboard bolt attaching seat to side sill pylon.

(15) Move seat forward and rearward and check the efforts to move seat. If effort is to high loosen seat track bolts and retighten to the proper torque.

NOTE: Tighten all seat track retaining bolts to 61 N·m (45 ft. lbs.) torque.

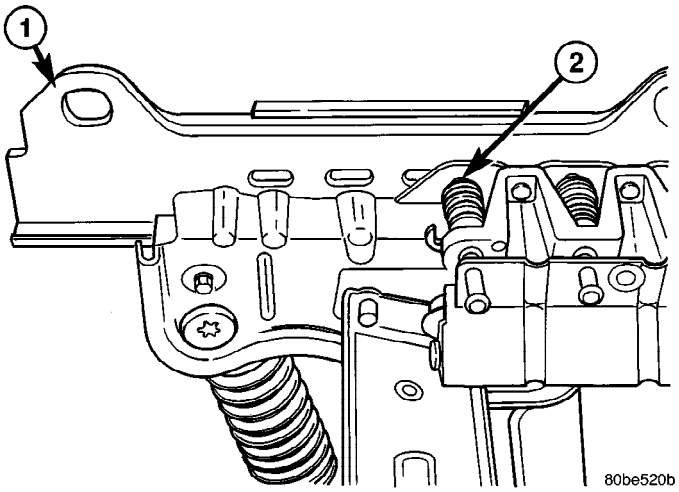

Fig. 5 Seat Track Position

1 - REAR OF SEAT TRACK
2 - FORTH HOLE POSITION

INSTALLATION - POWER - JR-27 ONLY

(1) Adjust seat back to vertical position using either recliner handle.

(2) Position seat in vehicle.

(3) Tilt seat rearward and connect wire connector to seat belt pretensioner and power seat mechanism.

(4) Push downward on seat cushion to ensure that the front mounting brackets are fully seated to floor pan crossmember.

(5) Use power seat switch to move seat to full rearward position.

(6) Install and tighten rear outboard bolt attaching seat to side sill pylon.

FRONT SEAT (Continued)

(7) Install and tighten forward outboard bolt attaching seat to crossmember.
(8) Install and tighten forward inboard bolt attaching seat to crossmember.
(9) Use power seat switch to move seat to full forward position.
(10) Install and tighten rear inboard bolt attaching seat to floor pan.
(11) Install and tighten middle outboard bolt attaching seat to side sill pylon.

NOTE: Tighten all seat track retaining bolts to 61 N·m (45 ft. lbs.) torque.

FRONT SEAT BACK

REMOVAL

REMOVAL

(1) Remove seat from vehicle.
(2) Remove seat cushion side shields.

NOTE: Do not reuse the recliner assembly attaching bolts.

(3) Remove bolts attaching recliner to seat back cushion frame (Fig. 6).
(4) Remove pivot bolts (Fig. 7).
(5) Disconnect any electrical connectors to the seat back, if equipped.
(6) Remove seat back from seat cushion.

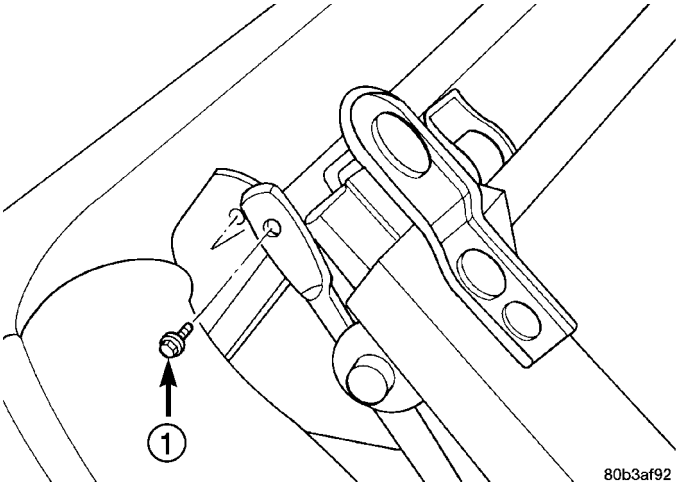

Fig. 6 Recliner Attaching Bolt

1 - RECLINER BOLT

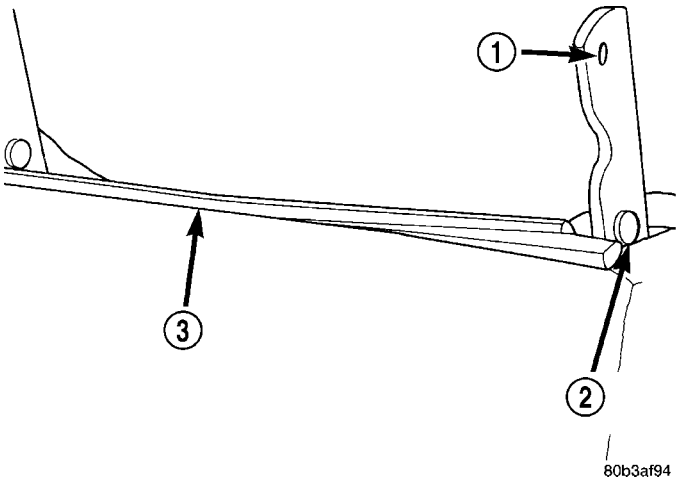

Fig. 7 Remove Seat Back

1 - RECLINER BOLT HOLE
2 - SEAT BACK BOLT HOLE
3 - J-STRAP RETAINER

REMOVAL - JR-27 ONLY

(1) Remove seat from vehicle(Refer to 23 - BODY/SEATS/SEAT - REMOVAL).
(2) Remove recliner handle.
(3) Remove seat side shield(Refer to 23 - BODY/SEATS/SEAT CUSHION SIDE SHIELDS - REMOVAL).
(4) Remove recliner cable eyelet clip (Fig. 8).
(5) Remove recliner cable from arm on seat adjuster and feed cable back through hole in seat adjuster.

NOTE: The torque prevailing nuts used to secure the lower seat belt anchor and seat belt buckle are not reusable. Verify availability prior to proceeding.

(6) Remove seat cushion(Refer to 23 - BODY/SEATS/SEAT CUSHION - REMOVAL).
(7) Remove nut attaching lower seat belt anchor to seat frame (Fig. 8).
(8) Back off nut attaching seat belt buckle to seat frame.
(9) Remove seat belt buckle pretensioner from seat frame.
(10) Remove E-clip and washer from easy entry rod at inboard side of seat, manual seat only.
(11) Remove rod from seat back, manual seat only.
(12) Remove pivot bolts attaching seat back to seat frame.

WARNING: DO NOT PULL ON UPPER RECLINER HANDLE OR RECLINER CABLE END AT ANY POINT UNTIL THE LEAD SCREW IS REMOVED IT IS UNDER A HIGH PRESSURE LOAD.

(13) Remove bolt attaching recliner lead screw to seat frame.

FRONT SEAT BACK (Continued)

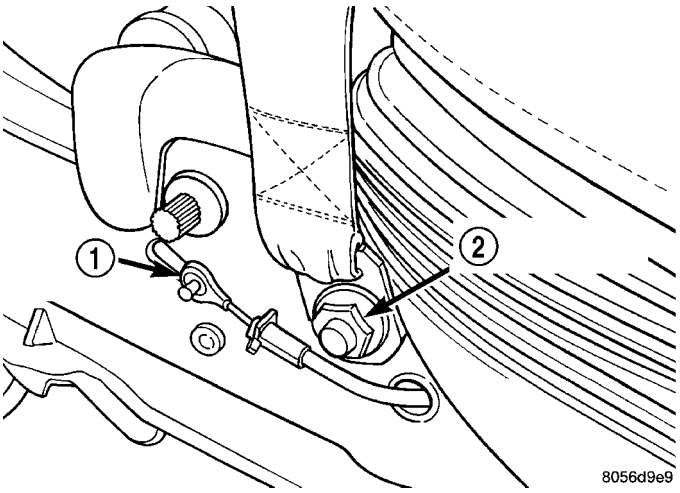

Fig. 8 Lower Seat Belt Anchor And Recliner Cable

1 - RECLINER CABLE
2 - LOWER SEAT BELT ANCHOR

(14) Remove seat back from seat frame(Refer to 23 - BODY/SEATS/SEAT BACK - REMOVAL).

(15) Unscrew lead screw from recliner mechanism (Fig. 9).

(16) Remove lead screw, spring and spring plate (Fig. 10).

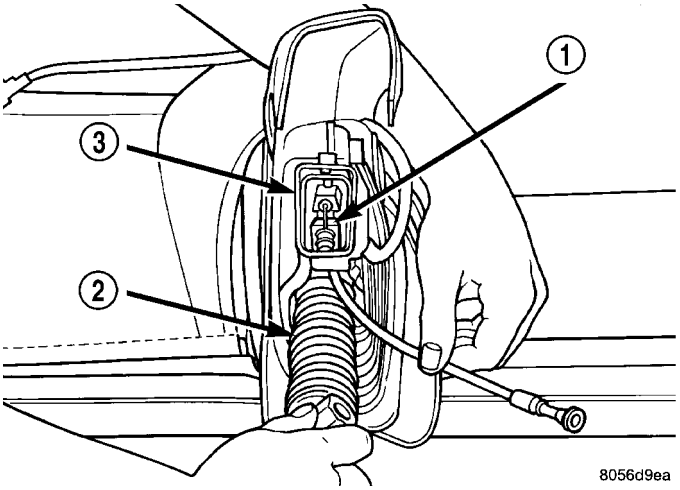

Fig. 9 Recliner Lead Screw

1 - RECLINER MECHANISM
2 - LEAD SCREW
3 - SEAT FRAME

INSTALLATION

INSTALLATION

(1) Position seat back on cushion.

(2) Install both pivot bolts and tighten 40 N·m (30 ft. lbs.).

NOTE: Do not reuse the recliner assembly attaching bolts.

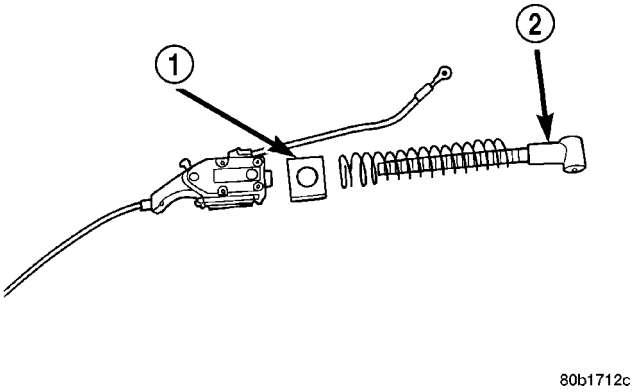

Fig. 10 Recliner Lead Screw

1 - LEAD SCREW SPRING PLATE
2 - LEAD SCREW

(3) Install bolts attaching recliner to seat back frame and tighten to 12 N·m (9 ft. lbs.).

(4) Install seat cushion side shields.

(5) Install seat in vehicle.

INSTALLATION - JR-27 ONLY

(1) Screw recliner lead screw into recliner mechanism. (Fig. 9).

WARNING: DO NOT PULL ON UPPER RECLINER HANDLE OR RECLINER CABLE END AT ANY POINT UNTIL THE LEAD SCREW IS REMOVED.

(2) Route recliner cable in front of metal strap at bottom of the seat back frame (Fig. 11).

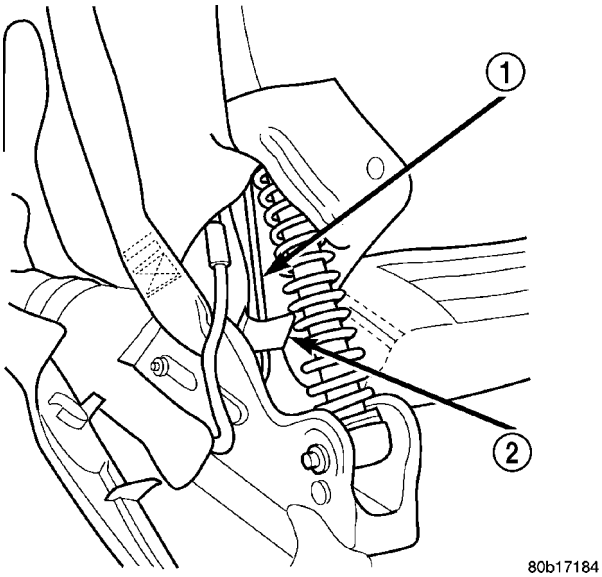

Fig. 11 Route Recliner Cable

1 - NEW CABLE ROUTING (DRIVER SEAT)
2 - BACK FRAME STRAP

(3) Position seat back to seat frame(Refer to 23 - BODY/SEATS/SEAT BACK - INSTALLATION).

FRONT SEAT BACK (Continued)

(4) Install bolt attaching recliner lead screw to seat frame. Tighten bolt to 45 N·m (33 ft. lbs.) torque.

(5) Install pivot bolts attaching seat back to seat frame. Tighten bolts to 51 N·m (38 ft. lbs.) torque.

(6) Attach easy entry rod to seat back, passenger side only.

(7) Install easy entry washer and E-clip, passenger side only.

(8) Install seat cushion (Refer to 23 - BODY/SEATS/SEAT CUSHION - INSTALLATION).

(9) Feed recliner cable through hole in seat adjuster and engage cable eyelet to arm on seat adjuster.

(10) Install new recliner cable eyelet clip to arm on seat frame (Fig. 8).

(11) Position seat belt buckle pretensioner to bolt on side of seat adjuster and install nut.

NOTE: Apply thread adhesive to threads before installing nut.

(12) Position lower seat belt anchor to bolt on seat adjuster.

(13) Verify that seat belt is routed such that it will not be twisted when engaged to the seat belt buckle.

(14) Install new nut attaching lower seat belt anchor to seat frame (Fig. 8).

NOTE: Tighten the lower seat belt anchor and seat belt buckle nuts to 47 N·m (35 ft. lbs.) torque.

NOTE: Verify that a minimum of three threads extend beyond the lower seat belt anchor nut and that the lower seat belt anchor swivels freely. If both conditions are not found, remove nut, torque bolt, and while preventing bolt from turning, torque nut.

(15) Install seat side shield(Refer to 23 - BODY/SEATS/SEAT CUSHION SIDE SHIELDS - INSTALLATION). Verify that side and rear screws go through the rubber bellows.

(16) Install seat to vehicle (Refer to 23 - BODY/SEATS/SEAT - INSTALLATION).

FRONT SEAT BACK COVER

REMOVAL

REMOVAL

(1) Remove seat from vehicle.

(2) Remove head restraint.

(3) Remove front seat back.

(4) Remove lumbar support handle, if equipped.

(5) Disengage the J-strap retainer (Fig. 7).

(6) Remove hog rings attaching foam pad to back frame (Fig. 12).

(7) Roll seat back cover up to the next hog rings and remove hog rings.

(8) For bonded seat back cover separate frame from bonded cover and pad.

(9) Roll cover to top of cushion and remove head restraint sleeve guides. Do not reuse head restraint sleeve guides.

(10) Remove cover from seat back.

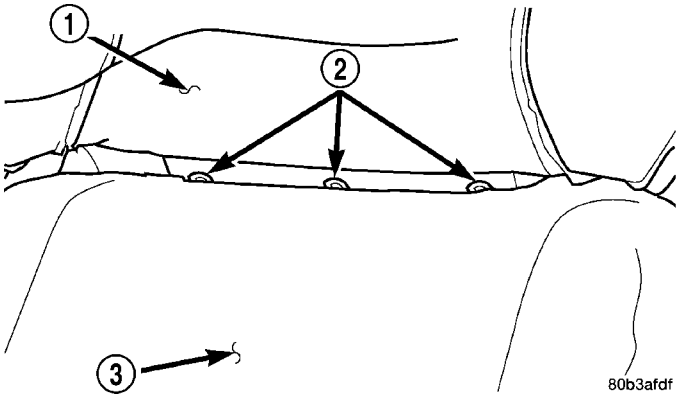

Fig. 12 Front Seat Back Hog Rings

1 - SEAT COVER
2 - HOG RINGS
3 - CUSHION

REMOVAL - JR-27 ONLY

(1) Remove seat from vehicle(Refer to 23 - BODY/SEATS/SEAT - REMOVAL).

(2) Remove head restraint (Fig. 13) by depressing headrest button and using a pick tool in access hole simultaneously.

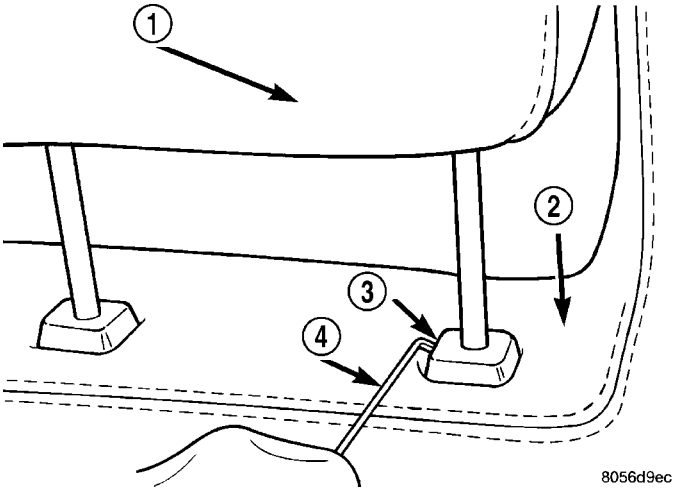

Fig. 13 Head Restraint Removal

1 - HEADREST
2 - SEAT
3 - ACCESS HOLE
4 - PICK TOOL

FRONT SEAT BACK COVER (Continued)

(3) Remove seat back(Refer to 23 - BODY/SEATS/SEAT BACK - REMOVAL).

(4) Remove upper recliner handle and lumber adjustment handle, if so equipped.

(5) sRemove seat side shield(Refer to 23 - BODY/SEATS/SEAT CUSHION SIDE SHIELDS - REMOVAL).

(6) Remove nut attaching lower seat belt anchor to seat frame (Fig. 8)(Refer to 23 - BODY/SEATS/SEAT BACK - REMOVAL).

(7) Remove seat belt bezel.

NOTE: The torque prevailing nut used to secure the lower seat belt anchor is not reusable. Verify availability prior to proceeding.

(8) Disengage plastic J-strip retainer at bottom of seat back (Fig. 14).

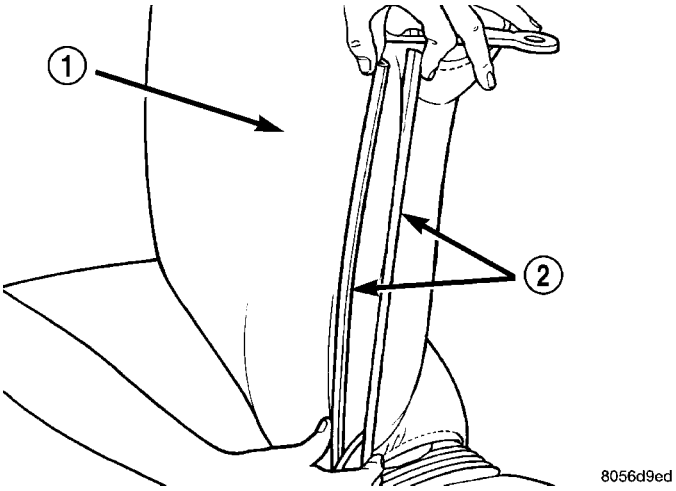

Fig. 14 Seat Cover Retainer Strip

1 - SEAT BACK
2 - PLASTIC RETAINER STRIP

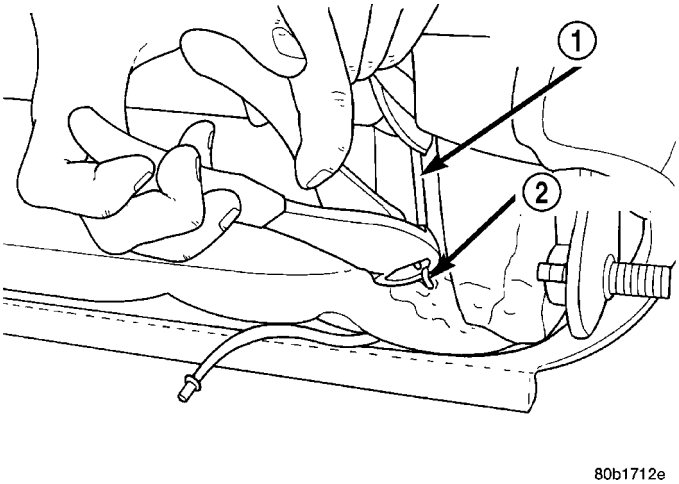

Fig. 15 Hog Rings

1 - SEAT COVER SEAM STRAP
2 - HOG RING

(9) Remove hog rings holding seat cover seam cords to wires in seat back foam (Fig. 15) and (Fig. 16).

(10) Feed seat belt bezel and seat belt through seat cover while pulling cover from seat back foam.

(11) Remove hog rings attaching the seat cover seam cords and wires to seat back foam.

(12) Poll seat cover upward to mid point position.

(13) Remove head restraint guides (Fig. 17).

(14) Remove seat back cover from seat back foam and frame.

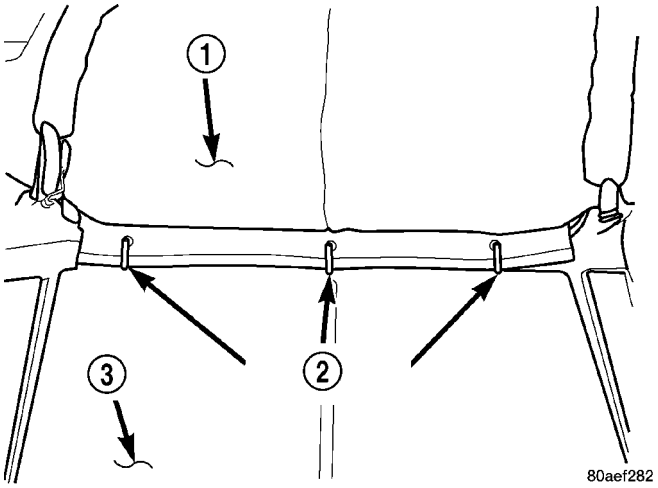

Fig. 16 Mid Seat Back Hog Rings

1 - CUSHION COVER
2 - HOG RINGS
3 - CUSHION

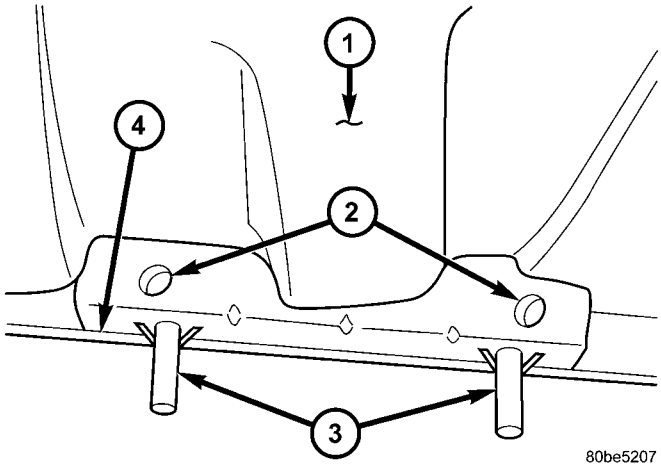

Fig. 17 2 Head Restraint Guides

1 - SEAT CUSHION
2 - HOG RINGS
3 - HEADREST GUIDES
4 - BOTTOM OF TOP SEAT FRAME RAIL

FRONT SEAT BACK COVER (Continued)

INSTALLATION

INSTALLATION

NOTE: Do not reuse the recliner assembly attaching bolts.

(1) Position cover on the top of seat back.
(2) Install new head restraint sleeve guides.
(3) Carefully roll cover down to the area that hog rings are to be installed.
(4) Install hog rings.
(5) Install hog rings attaching back frame to foam pad.
(6) Roll cover downward.
(7) Engage the J-strap retainer
(8) Install lumbar support handle, if equipped.
(9) Install new head restraint sleeve guides.
(10) Install seat back to seat cushion. Tighten recliner bolts to 40 N·m (30 ft. lbs.) torque. Tighten pivot bolts to 12 N·m (9 ft. lbs.) torque.
(11) Install seat in vehicle.
(12) Install head restraint.
(13) Check seat back and headrest operation.

INSTALLATION - JR-27 ONLY

(1) Position seat back cover on to seat back foam and frame.
(2) Install hog rings attaching seat back foam to seat back frame.
(3) Feed seat belt bezel and seat belt through hole in seat cover.
(4) Route recliner cable in front of metal strap at bottom of the seat back frame (Fig. 11).
(5) Pull seat cover downward to first horizontal trench in seat back foam.
(6) Align seat cover upper horizontal seam center notch to center hog ring location.
(7) Install hog rings, center first, to attach upper insert cover seam wire to wire in seat back foam.
(8) Install hog rings to attach seat cover seam cords to wires in seat back foam.
(9) Pull seat cover down fully over seat back foam.
(10) Connect seat cover J-strips at bottom of seat back.
(11) Install head restraint guides
(12) Slide long snaps on outboard portion of seat belt bezel inside seat back cover and seat belt retractor cover.
(13) Install upper recliner handle and lumbar adjustment handle, if so equipped.
(14) Attach lower seat belt anchor to bolt on seat adjuster.
(15) Verify that seat belt is routed such that it will not be twisted when engaged to the seat belt buckle.
(16) Install new nut attaching lower seat belt anchor to seat frame (Fig. 8).

NOTE: Tighten the lower seat belt anchor nut to 47 N·m (35 ft. lbs.) torque.

(17) Verify that a minimum of three threads extend beyond the lower seat belt anchor nut and that the lower seat belt anchor swivels freely. If both conditions are not found, check that the bolt is fully engaged to the seat adjuster.
(18) Install seat to vehicle(Refer to 23 - BODY/SEATS/SEAT - INSTALLATION).
(19) Check seat belt operation.

FRONT SEAT CUSHION SIDE SHIELDS

REMOVAL

REMOVAL

(1) Remove seat from vehicle.
(2) Remove screws attaching seat cushion side shield to the bottom and side of seat cushion (Fig. 18) and (Fig. 19).
(3) Remove shield from seat
(4) Disconnect switch wire connectors, if equipped.
(5) Remove seat switches, if equipped.

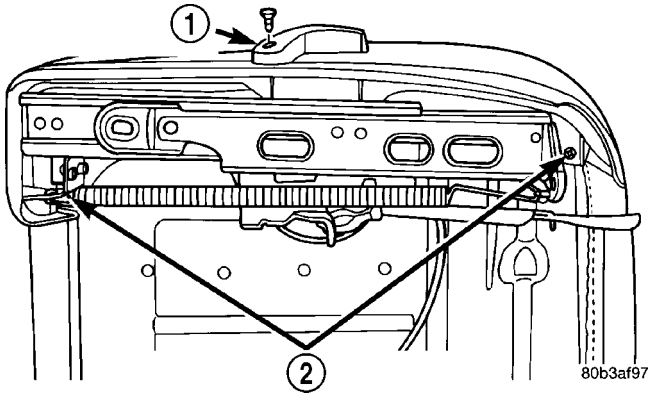

Fig. 18 Bottom View of Side Shield

1 - RECLINER HANDLE AND FASTENER
2 - SIDE SHIELD FASTENERS

REMOVAL - JR-27 ONLY

(1) Remove lower recliner handle.
(2) Remove screws attaching seat side shield to seat frame.
(3) Remove screws attaching power seat switch to side shield, if so equipped.
(4) Remove side shield from vehicle (Fig. 20).

FRONT SEAT CUSHION SIDE SHIELDS (Continued)

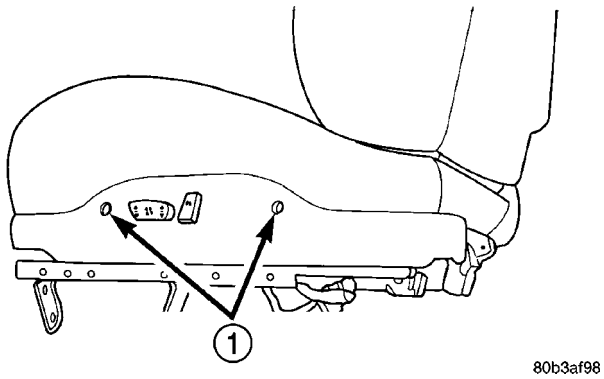

Fig. 19 Side View of Side Shield

1 - SIDESHIELD FASTENERS

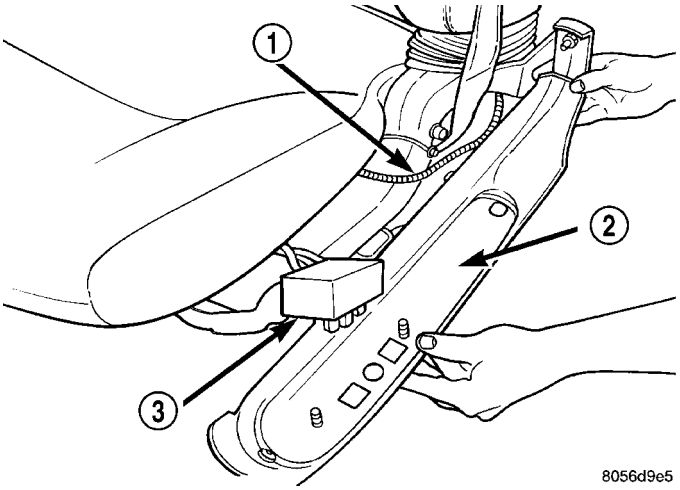

Fig. 20 Front Seat Side Shield

1 - SEAT FRAME
2 - SEAT SIDE SHIELD
3 - POWER SEAT SWITCH

INSTALLATION

INSTALLATION

(1) Transfer seat switches, if equipped.

(2) Connect switch wire connectors to cushion side shield, if equipped.

(3) Place shield in position on seat cushion.

(4) Install screws attaching seat cushion side shield.

(5) Install seat. Tighten front screws to 61 N·m (45 ft. lbs.) and the rear screws to 61 N·m (45 ft. lbs.).

INSTALLATION - JR-27 ONLY

(1) Position side shield near seat.

(2) Install screws attaching power seat switch to side shield, if so equipped.

(3) Install screws attaching side shield to seat frame.

(4) Install lower recliner handle.

FRONT SEAT CUSHION

REMOVAL - FRONT

(1) Remove seat from vehicle.

(2) Remove front seat cushion side shields and disconnect wire connectors, if equipped.

(3) Remove seat back.

(4) Remove seat cushion bolts.

(5) Disconnect wire harness fasteners from cushion frame (Fig. 21).

(6) Remove seat cushion (Fig. 22).

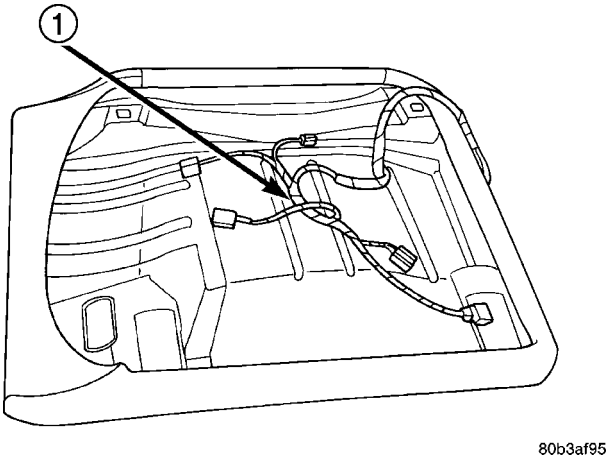

Fig. 21 Front Seat Cushion Wire Harness

1 - WIRE HARNESS

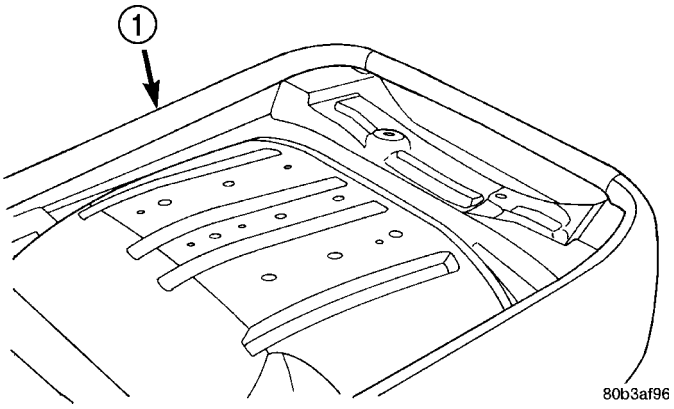

Fig. 22 Front Seat Cushion

1 - FRONT SEAT CUSHION

INSTALLATION - FRONT

(1) Install wire harness fasteners to cushion frame.

(2) Install seat cushion bolts.

(3) Install seat back. Tighten recliner bolts to 12 N·m (9 ft. lbs.) torque. Tighten pivot bolts to 40 N·m (30 ft. lbs.) torque.

(4) Connect switch wire connectors to the cushion side shield, if equipped.

(5) Install cushion side shields.

(6) Install seat in vehicle.

FRONT SEAT CUSHION COVER

REMOVAL - FRONT SEAT CUSHION COVER

NOTE: Fabric covered cushions are serviced as an assembly.

(1) Remove seat from vehicle.
(2) Remove front seat cushion side shields and disconnect wire connectors, if equipped.
(3) Remove seat back.
(4) Remove seat cushion bolts.
(5) Disconnect wire harness fasteners from cushion pan. (Fig. 21).
(6) Disengage J-strap attaching seat cover from the seat cushion frame (Fig. 23).
(7) Pull cover off to the hog rings (Fig. 24).
(8) Cut hog rings attaching seat cover seat cushion.
(9) Remove seat cushion cover from seat cushion.

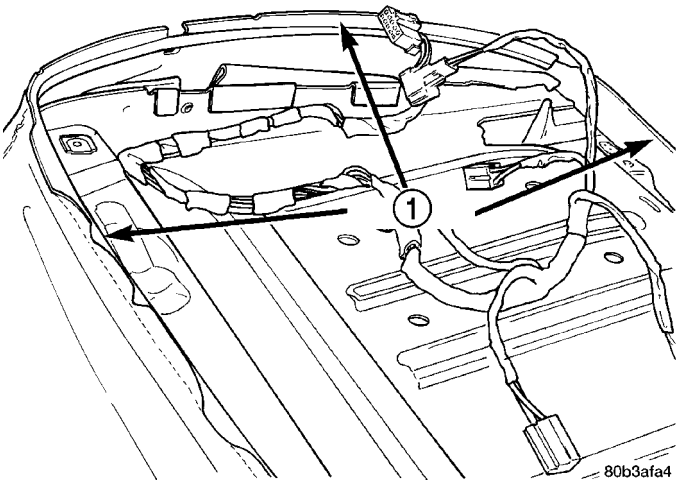

Fig. 23 Front Seat Cushion J-Strap

1 - J-STRAP

INSTALLATION - FRONT SEAT CUSHION COVER

NOTE: Fabric covered cushions are serviced as an assembly.

(1) Position seat cover on cushion.
(2) Align seat cover with cushion alignment indentations (Fig. 25).
(3) Install hog rings.
(4) Engage J-strap attaching seat cover to front of seat cushion frame.

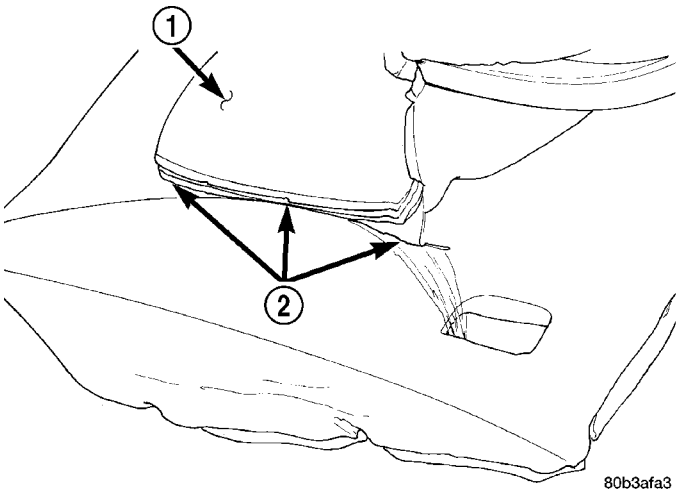

Fig. 24 Seat Cushion Cover

1 - SEAT COVER
2 - HOG RINGS

(5) Install wire harness fasteners to cushion pan.
(6) Install seat cushion bolts.
(7) Install seat back. Tighten recliner bolts to 12 N·m (9 ft. lbs.) torque. Tighten pivot bolts to 40 N·m (30 ft. lbs.) torque.
(8) Connect switch wire connectors to the cushion side shield, if equipped.
(9) Install cushion side shields.
(10) Install seat in vehicle.

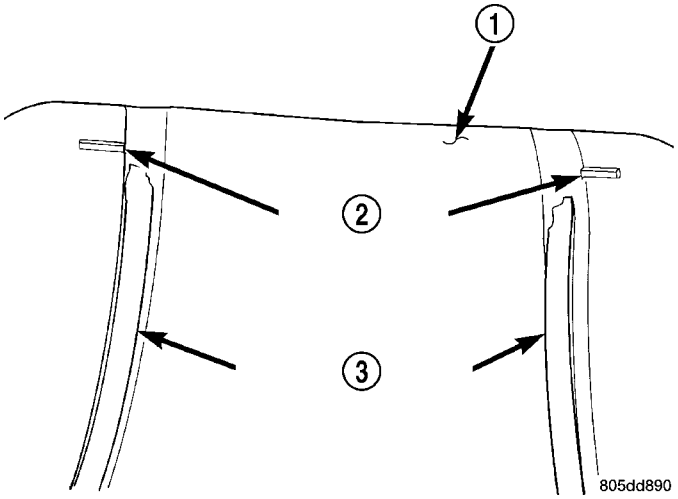

Fig. 25 Seat Cushion

1 - SEAT CUSHION
2 - ALIGNMENT INDENTATIONS
3 - HOOK AND LOOP FASTENER

REAR SEAT

DESCRIPTION

Refer to (Fig. 26) for more information while servicing the rear seat.

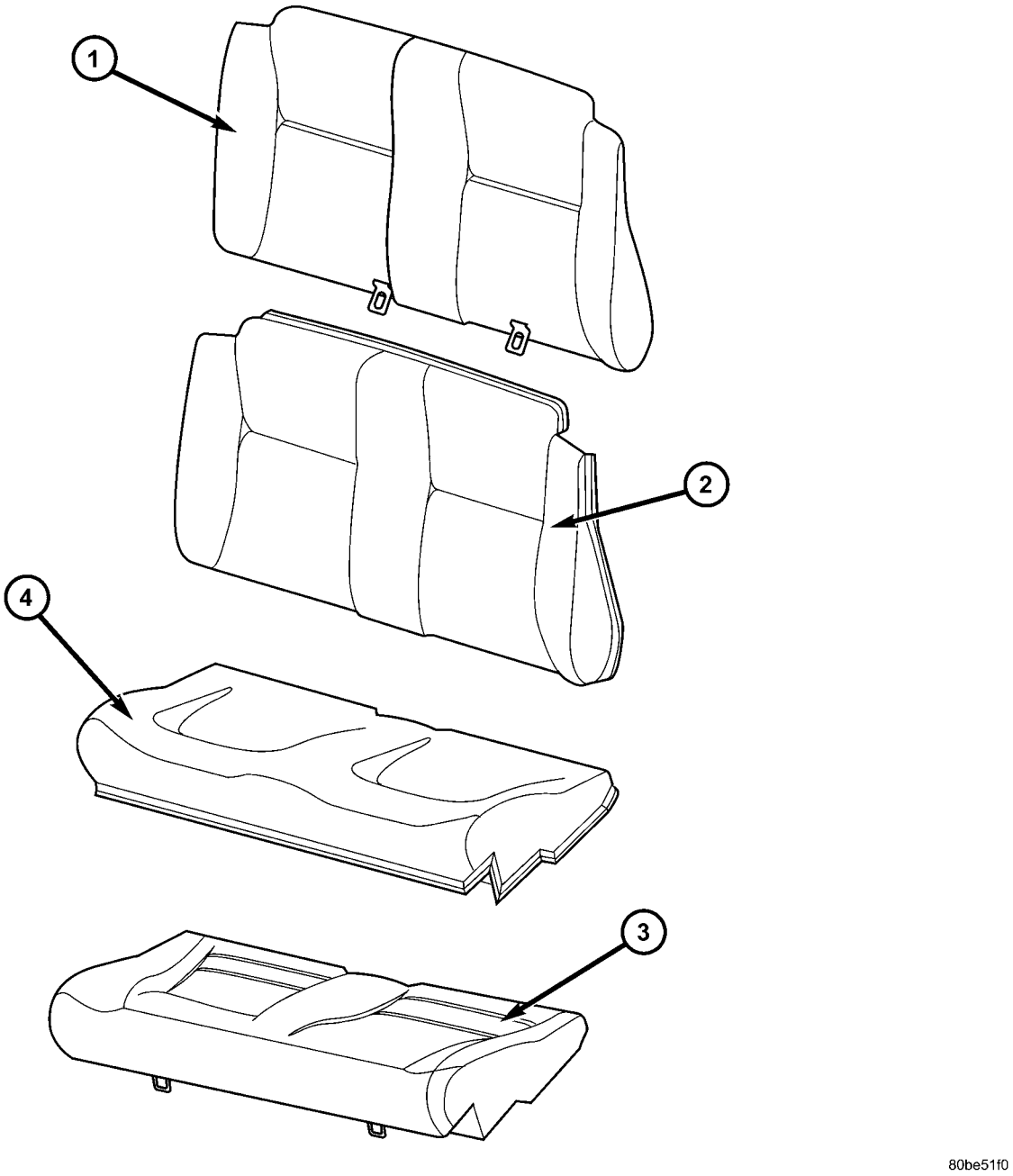

Fig. 26 Rear Seat Exploded View

1 - SEAT BACK FOAM AND FRAME
2 - SEAT BACK COVER
3 - SEAT CUSHION COVER
4 - SEAT CUSHION FOAM AND FRAME

REAR SEAT CUSHION

REMOVAL

REMOVAL - REAR

NOTE: Fabric covered cushions are serviced as an assembly.

(1) Pull upward at forward edge of cushion each retainer loop of the rear seat cushion to disengage retainer loops from cups in floor (Fig. 27).
(2) Guild seat belts through loops.
(3) Remove rear seat cushion from vehicle.

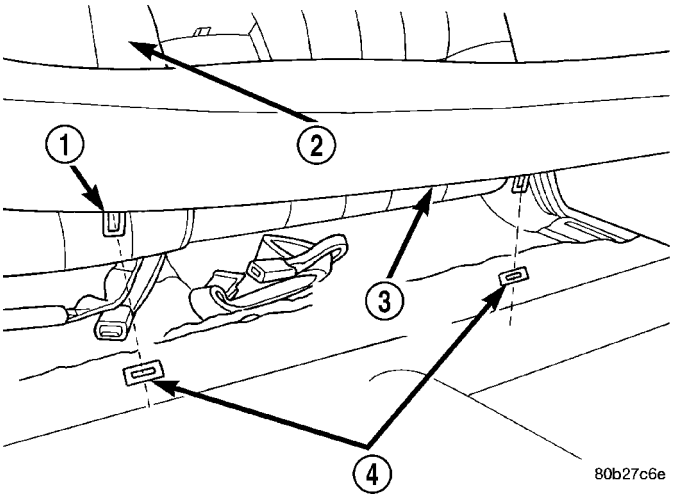

Fig. 27 Rear Seat Cushion

1 - RETAINER LOOP
2 - REAR SEAT BACK
3 - REAR SEAT CUSHION
4 - CUPS

REMOVAL - JR-27 ONLY

NOTE: Special care should be taken when removing rear seat cushion to prevent damage to the cushion frame. Remove cushion at attachment areas, not at wing area.

(1) Push firmly rearward and upward at one attachment point and disengage wire loops from retainers in floor pan (Fig. 28).
(2) Repeat for other attachment point.
(3) Separate rear seat cushion from vehicle.

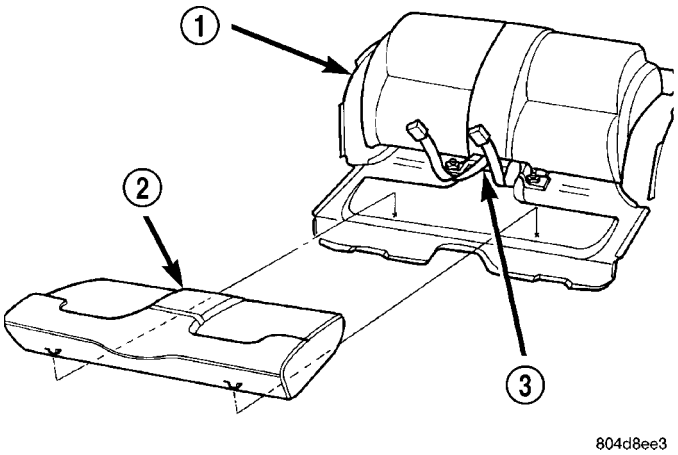

Fig. 28 Rear Seat Cushion

1 - REAR SEAT BACK
2 - REAR SEAT CUSHION
3 - INNER SEAT BELTS

INSTALLATION

INSTALLATION - REAR

NOTE: Fabric covered cushions are serviced as an assembly.

NOTE: Verify visibility of “Latch” bars in the seat bite area.

(1) Place rear seat cushion in position.
(2) Guild seat belts through loops.
(3) Engage retainer loops into cup on floor kick-up.
(4) Push downward at forward edge at each retainer loop of the rear seat cushion to engage retainers.

INSTALLATION - JR-27 ONLY

NOTE: Special care should be taken when removing rear seat cushion to prevent damage to the cushion frame. Remove cushion at attachment areas, not at wing area.

(1) Position rear seat cushion in vehicle.
(2) Place inner seat belts on top of seat cushion.
(3) Push seat cushion rearward and align wire loops to retainers in floor pan.
(4) Push rear seat cushion firmly downward and engage wire loops to retainers in floor pan.

REAR SEAT CUSHION COVER

REMOVAL

REMOVAL - REAR SEAT CUSHION COVER

(1) Remove rear seat cushion.
(2) Disengage the J-strap retainers (Fig. 29).
(3) Cut hog rings to free cover (Fig. 30).
(4) Remove seat cushion cover from seat cushion.

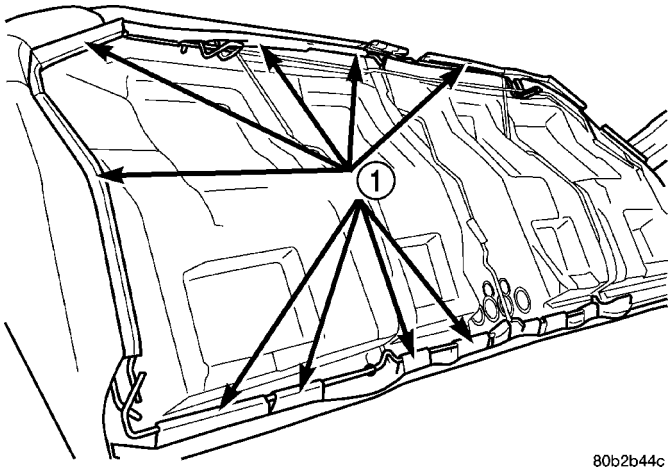

Fig. 29 Rear Seat Cushion Cover J-Straps

1 - J-STRAPS

REMOVAL - JR-27 ONLY

(1) Remove rear seat cushion from vehicle (Refer to 23 - BODY/SEATS/SEAT CUSHION - REMOVAL).

(2) Place seat cushion on a suitable work surface in inverted position.

(3) Remove hog rings around perimeter of seat cushion attaching seat cushion cover to seat cushion frame.

(4) Pull seat cover from seat cushion frame and seat cushion foam.

(5) Remove hog rings attaching seat cover seam wires to seat foam wires.

(6) Remove seat cover from seat frame and seat cushion foam.

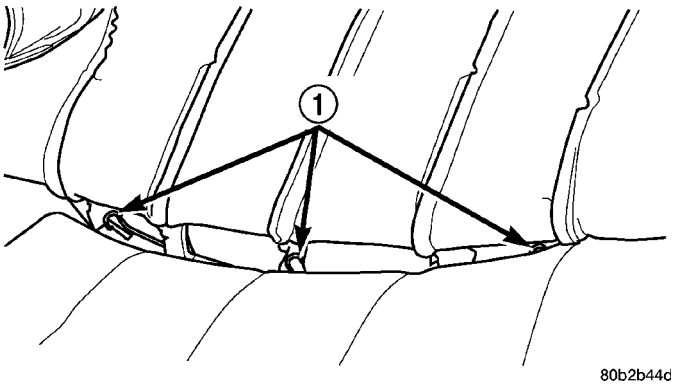

Fig. 30 Rear Seat Cushion Cover Hog Rings

1 - HOG RINGS

INSTALLATION

INSTALLATION - REAR SEAT CUSHION COVER

(1) Position seat cushion cover on cushion.
(2) Install hog rings to seat cover.
(3) Engage the J-strap retainers.
(4) Steam wrinkles from seat cushion, if necessary.
(5) Install seat cushion.

INSTALLATION - JR-27 ONLY

(1) Position seat cushion cover to seat cushion frame and seat cushion foam.

(2) Install a hog ring at each hog ring location to attach seat cushion cover seam wires to wires in seat cushion foam. Begin at center location and work outward.

(3) Repeat above steps for opposite inboard vertical seam, both outboard vertical seams, and for the horizontal seams.

(4) Pull seat cover over seat cushion frame and seat cushion foam.

(5) Install hog rings at hog ring locators around perimeter of seat cushion foam attaching seat cushion cover to seat cushion frame.

(6) Install rear seat cushion to vehicle (Refer to 23 - BODY/SEATS/SEAT CUSHION - INSTALLATION).

REAR SEAT BACK

REMOVAL

REMOVAL - FOLDING BACK

NOTE: Fabric covered cushions are serviced as an assembly.

(1) Remove rear seat cushion. (Refer to 23 - BODY/SEATS/SEAT CUSHION - REMOVAL)
(2) Remove the rear seat buckles and belt anchors. (Refer to 8 - ELECTRICAL/RESTRAINTS/SEAT BELT - REAR INBOARD - REMOVAL)
(3) Remove the outer seat back bracket nuts (Fig. 31).
(4) Release folding rear seat back latches.
(5) Remove seat back from vehicle.

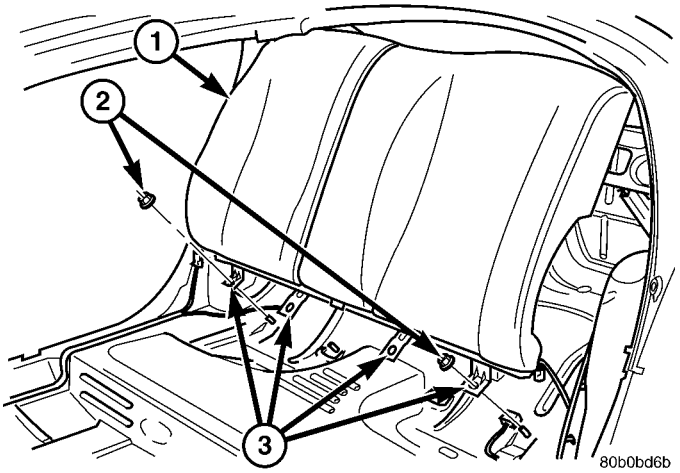

Fig. 31 REAR SEAT BACK

1 - SEAT BACK
2 - NUTS
3 - BRACKETS

REMOVAL - JR-27 ONLY

(1) Remove rear seat cushion (Refer to 23 - BODY/SEATS/SEAT CUSHION - REMOVAL).
(2) Pull bottom of rear seat back forward until seat back brackets clear studs on floor pan (Fig. 32).
(3) Push upward on rear seat back and disengage hooks attaching seat back to rear seat back support.
(4) Remove rear seat back from vehicle.

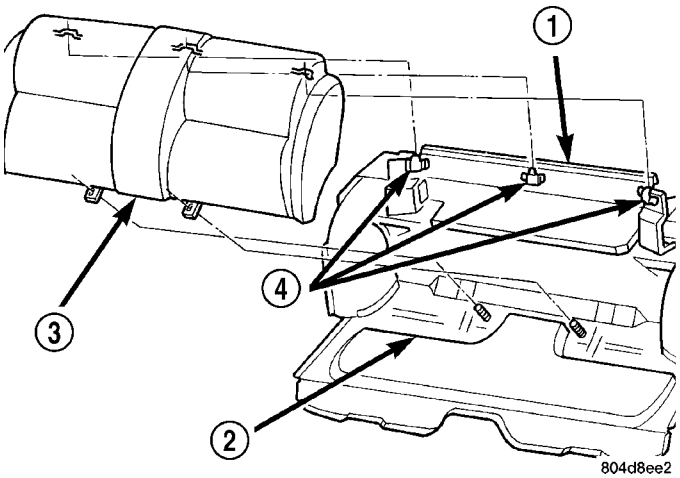

Fig. 32 Rear Seat Back

1 - REAR SEAT BACK SUPPORT
2 - FLOOR PAN
3 - REAR SEAT BACK
4 - RETAINING BRACKET

INSTALLATION

INSTALLATION - FOLDING BACK

NOTE: Fabric covered cushions are serviced as an assembly.

(1) Place the four seat back brackets over the body mounted weld studs and position seat back in vehicle.
(2) Engage folding rear seat back latch.
(3) Install the outer seat back bracket nuts and tighten to 61 Nm (45 ft. lbs.).
(4) Install the rear seat buckles and belt anchors. (Refer to 8 - ELECTRICAL/RESTRAINTS/SEAT BELT - REAR INBOARD - INSTALLATION)
(5) Install rear seat cushion. (Refer to 23 - BODY/SEATS/SEAT CUSHION - INSTALLATION)

INSTALLATION - JR-27 ONLY

(1) Position rear seat back in vehicle.
(2) Tilt rear seat back rearward and raise seat back above retaining brackets on rear seat back support.
(3) Lower rear seat back until center loop begins to engage.
(4) Lower rear seat back and push rearward on outboard corners of seat back to engage outboard hooks to brackets on rear seat back support.
(5) Push downward on rear seat back until all hooks are fully engaged into retaining brackets.
(6) Install rear seat cushion.

REAR SEAT BACK COVER

REMOVAL - JR-27 ONLY

(1) Remove rear seat back from vehicle (Refer to 23 - BODY/SEATS/REAR SEAT BACK - REMOVAL).
(2) Place seat back on a suitable work surface in inverted position.
(3) Remove hog rings around perimeter of seat back holding seat back cover to seat back frame.
(4) Pull seat cover from seat back frame and seat back foam.
(5) Remove any hog rings holding seat cover seam wires to seat foam wires.
(6) Remove seat cover from seat frame and seat back foam.

INSTALLATION - JR-27 ONLY

(1) Position seat cover to seat back frame and seat back foam.
(2) Align notch in center of seat back cover vertical seam to center hog ring locator.
(3) Install a hog ring at each hog ring location, center first, attaching seat back cover seam to wires in seat back foam.
(4) Repeat the above steps for the opposite inboard vertical seam, both outboard vertical seams, and the lower horizontal seam.
(5) Install hog rings at each hog ring locator, center first, to attach ends of vertical portions of U-shaped wires to vertical foam wires.
(6) Align notch in center of upper horizontal seat cover seam to center hog ring location.
(7) Install a hog ring at each hog ring locator to hold upper horizontal seam wire to wire in seat back foam.
(8) Install hog rings attaching seat cover seam wires to seat frame.
(9) Pull seat cover over seat back frame and seat back foam.
(10) Install hog rings at hog ring locators around perimeter of seat back cushion attaching seat cover to seat back frame.
(11) Install rear seat back to vehicle (Refer to 23 - BODY/SEATS/REAR SEAT BACK - INSTALLATION).

SEAT ADJUSTERS

REMOVAL

REMOVAL - FRONT SEAT ADJUSTER – POWER

(1) Remove front seat from vehicle.
(2) Remove seat cushion side shield and disconnect switch connector.
(3) Remove seat back.
(4) Remove bolts attaching seat adjuster to cushion pan (Fig. 33).
(5) Disconnect wire harness fasteners from cushion pan.
(6) Remove seat adjuster from seat cushion.

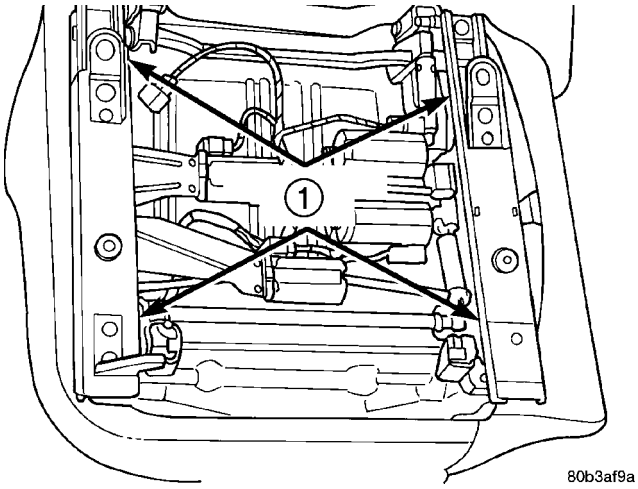

Fig. 33 Front Seat Track

1 - ATTACHING BOLTS

REMOVAL - MANUAL ADJUSTER

(1) Remove front seat from vehicle (Refer to 23 - BODY/SEATS/SEAT - REMOVAL).
(2) Remove recliner handle.
(3) Remove seat cushion side shield (Refer to 23 - BODY/SEATS/SEAT CUSHION SIDE SHIELDS - REMOVAL).
(4) Remove seat back (Refer to 23 - BODY/SEATS/SEAT BACK - REMOVAL).
(5) Remove recliner.
(6) Remove towel bar spring.
(7) Remove push nuts attaching towel bar to seat adjuster.
(8) Remove towel bar from seat adjuster.
(9) Remove seat adjuster.

INSTALLATION

INSTALLATION - FRONT SEAT ADJUSTER – POWER

(1) Place seat adjuster in position on seat cushion pan.
(2) Connect wire harness fasteners to the cushion pan.
(3) Install bolts attaching seat adjuster to cushion pad.
(4) Install seat back.
(5) Install bolt to attach seat back recliner to seat back on each side of seat. Tighten bolt to 12 N·m (9 ft. lbs.) torque.

SEAT ADJUSTERS (Continued)

(6) Connect wire connectors and install the cushion side shields.
(7) Install front seat in vehicle.

INSTALLATION - MANUAL ADJUSTER

(1) Place seat adjuster in position.
(2) Install seat adjuster.
(3) Install towel bar to seat adjuster.
(4) Install new push nuts to attach towel bar to seat adjuster.
(5) Install towel bar spring.
(6) Install recliner.
(7) Install seat back(Refer to 23 - BODY/SEATS/SEAT BACK - INSTALLATION).
(8) Install bolt to attach seat back recliner to seat back on each side of seat. Tighten recliner bolt to 12 N·m (9 ft. lbs.) torque. Tighten pivot bolts to 40 N·m (30 ft. lbs.) torque.
(9) Install recliner handle.
(10) Install front seat in vehicle(Refer to 23 - BODY/SEATS/SEAT - INSTALLATION).

SEAT BACK LATCH STRIKER

REMOVAL

(1) Release seat back latch and fold down.
(2) Remove the bolts and remove the latch striker (Fig. 34).

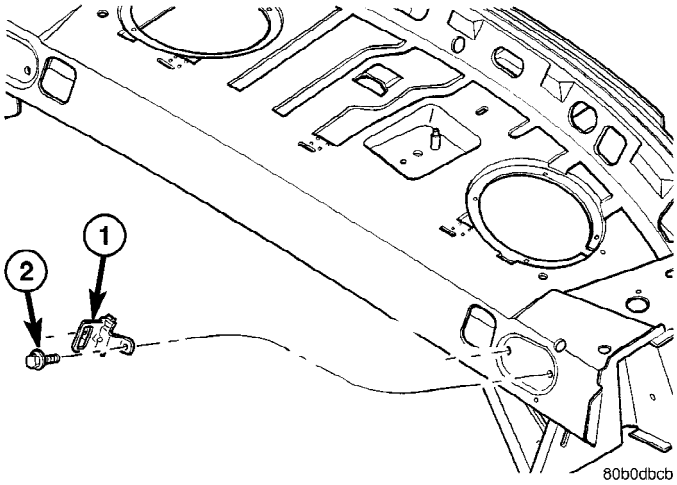

Fig. 34 SEAT BACK STRIKER

1 - STRIKER
2 - BOLTS

INSTALLATION

NOTE: Striker is not symmetrical and should be installed with the white date code towards the outside of the vehicle.

(1) Install the seat back striker and install the bolts.
(2) Tighten the bolts to 12 N·m (9 ft. lbs.).
(3) Lock seat back in the up position and check for operation.

SEAT BACK RECLINER

REMOVAL

REMOVAL

(1) Remove front seat from vehicle.
(2) Remove recliner handle
(3) Remove seat cushion side shield.
(4) Remove seat back.
(5) Remove manual recliner right and left bolts.
(6) Remove manual recliner assembly.

REMOVAL - JR-27 ONLY

(1) Remove seat from vehicle(Refer to 23 - BODY/SEATS/SEAT - REMOVAL).
(2) Remove seat back from lower seat frame(Refer to 23 - BODY/SEATS/SEAT BACK - REMOVAL).
(3) Remove upper recliner handle.
(4) Remove seat back cover until the screws attaching the upper recliner mechanism to the seat back frame can be accessed.
(5) Remove rubber bellows covering lower part of seat back frame.
(6) Remove screws attaching upper recliner mechanism to seat frame.
(7) Remove bolts attaching recliner housing to seat frame.
(8) Push upper recliner mechanism into seat frame with handle shaft facing the front of the seat frame.

NOTE: Do not reuse bolts holding recliner housing to seat frame. Verify availability prior to proceeding.

(9) Pull recliner housing and upper recliner handle mechanism downward and out through bottom of seat frame (Fig. 35).

SEAT BACK RECLINER (Continued)

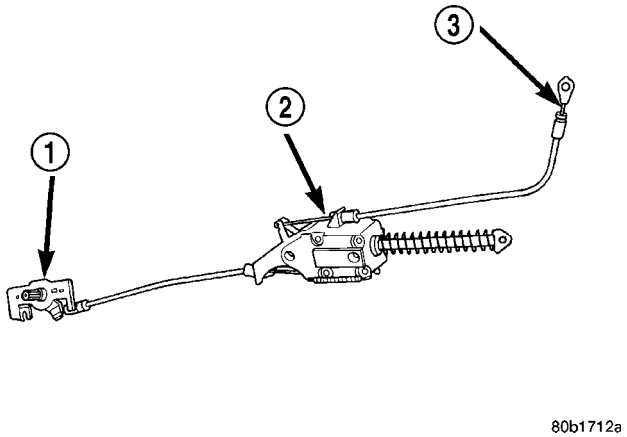

Fig. 35 Recliner Housing

1 - UPPER RECLINER MECHANISM
2 - RECLINER HOUSING
3 - RECLINER CABLE

INSTALLATION

INSTALLATION

(1) Place seat recliner in position.
(2) Install manual recliner right and left bolts.
(3) Install seat back.
(4) Install recliner.
(5) Install bolt to attach seat back recliner to seat back on each side of seat. Tighten recliner bolt to 12 N·m (9 ft. lbs.) torque. Tighten pivot bolts to 40 N·m (30 ft. lbs.) torque.
(6) Remove seat cushion side shield.
(7) Install recliner handle.
(8) Install front seat in vehicle.

INSTALLATION - JR-27 ONLY

(1) Feed upper recliner mechanism and then recliner housing into the seat back frame with handle shaft facing the front of the seat frame.
(2) Install new bolts to attach seat recliner housing to seat frame. Tighten to 34 N·m (300 in. lbs.) torque.
(3) Pull upper recliner mechanism through hole in seat frame.
(4) Install screws attaching upper recliner mechanism to seat frame.
(5) Install rubber bellows covering lower part of seat back frame.
(6) Install seat back cover.
(7) Install recliner spring bracket, spring, and lead screw.
(8) Install seat back to lower seat frame(Refer to 23 - BODY/SEATS/SEAT BACK - INSTALLATION).
(9) Install recliner handle.
(10) Install seat into vehicle(Refer to 23 - BODY/SEATS/SEAT - INSTALLATION).

STATIONARY GLASS

TABLE OF CONTENTS

	page
WINDSHIELD	
DESCRIPTION	118
WARNING	
WINDSHIELD SAFETY PRECAUTIONS	118
REMOVAL	
REMOVAL - JR-27 ONLY	118
REMOVAL	119
INSTALLATION	
INSTALLATION - JR-27	120
INSTALLATION	121
BACKLITE	
REMOVAL	122
INSTALLATION	123

WINDSHIELD

DESCRIPTION

The windshield is attached to the window frame with urethane adhesive. The urethane adhesive is applied cold and seals the surface area between the window opening and the glass. The primer adheres the urethane adhesive to the windshield.

It is difficult to salvage a windshield during the removal operation. The windshield is part of the structural support for the roof. The urethane bonding used to secure the windshield to the fence is difficult to cut or clean from any surface. If the moldings are set in urethane, it would also be unlikely they could be salvaged. Before removing the windshield, check the availability of the windshield and moldings from the parts supplier.

WARNING

WINDSHIELD SAFETY PRECAUTIONS

WARNING: DO NOT OPERATE THE VEHICLE WITHIN 24 HOURS OF WINDSHIELD INSTALLATION. IT TAKES AT LEAST 24 HOURS FOR URETHANE ADHESIVE TO CURE. IF IT IS NOT CURED, THE WINDSHIELD MAY NOT PERFORM PROPERLY IN AN ACCIDENT.
URETHANE ADHESIVES ARE APPLIED AS A SYSTEM. USE GLASS CLEANER, GLASS PREP SOLVENT, GLASS PRIMER, PVC (VINYL) PRIMER AND PINCH WELD (FENCE) PRIMER PROVIDED BY THE ADHESIVE MANUFACTURER. IF NOT, STRUCTURAL INTEGRITY COULD BE COMPROMISED.
DAIMLERCHRYSLER DOES NOT RECOMMEND GLASS ADHESIVE BY BRAND. TECHNICIANS SHOULD REVIEW PRODUCT LABELS AND TECHNICAL DATA SHEETS, AND USE ONLY ADHESIVES THAT THEIR MANUFACTURES WARRANT WILL RESTORE A VEHICLE TO THE REQUIREMENTS OF FMVSS 212. TECHNICIANS SHOULD ALSO INSURE THAT PRIMERS AND CLEANERS ARE COMPATIBLE WITH THE PARTICULAR ADHESIVE USED.
BE SURE TO REFER TO THE URETHANE MANUFACTURER'S DIRECTIONS FOR CURING TIME SPECIFICATIONS, AND DO NOT USE ADHESIVE AFTER ITS EXPIRATION DATE.
VAPORS THAT ARE EMITTED FROM THE URETHANE ADHESIVE OR PRIMER COULD CAUSE PERSONAL INJURY. USE THEM IN A WELL-VENTILATED AREA.
SKIN CONTACT WITH URETHANE ADHESIVE SHOULD BE AVOIDED. PERSONAL INJURY MAY RESULT.
ALWAYS WEAR EYE AND HAND PROTECTION WHEN WORKING WITH GLASS.

CAUTION: Protect all painted and trimmed surfaces from coming in contact with urethane or primers.
Be careful not to damage painted surfaces when removing moldings or cutting urethane around windshield.

REMOVAL

REMOVAL - JR-27 ONLY

EXTERIOR METHOD

(1) Open convertible top.
(2) Remove header/A-pilllar weatherstrip from weatherstrip retainers.
(3) Remove A-pillar weatherstrip retainer and molding.
(4) Remove header weatherstrip/molding.
(5) Mark top edge of the windshield glass at three locations on the header.
(6) Remove windshield wiper arms.
(7) Remove cowl cover.

WINDSHIELD (Continued)

(8) Place protective covers over instrument panel and hood.

(9) Using a sharp cold knife, cut urethane adhesive holding the windshield to the A-pillars, header and cowl pinch weld fences (Fig. 1). A power cutting device can be used if available.

(10) Remove windshield from vehicle.

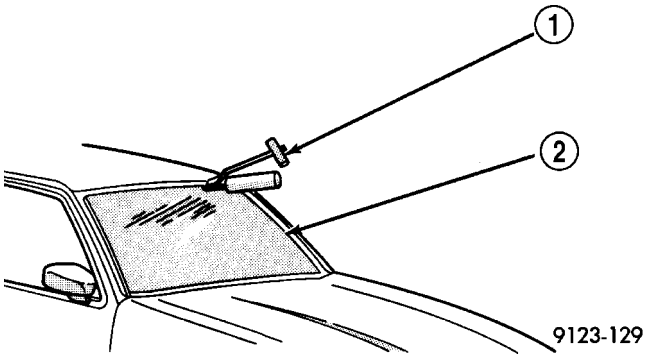

Fig. 1 Cut Urethane Around Windshield

1 - COLD KNIFE
2 - WINDSHIELD

INTERIOR METHOD

(1) Remove cowl cover.

(2) Open convertible top.

(3) Remove header/A-pillar weatherstrip from weatherstrip retainers.

(4) Remove A-pillar weatherstrip retainer and molding.

(5) Remove header weatherstrip/molding.

(6) Mark top edge of the windshield glass at three locations on the header.

(7) Remove header panel trim cover.

(8) Remove header panel weatherstrip from channel.

(9) Remove instrument panel top cover (Refer to 23 - BODY/INSTRUMENT PANEL/INSTRUMENT PANEL TOP COVER - REMOVAL).

(10) Remove A-pillar trim covers.

(11) Place protective covers over instrument panel and hood.

(12) Using a reciprocating or oscillating power knife, cut urethane adhesive holding the windshield to the A-pillars, roof header and cowl pinch weld fences. Refer to instructions provided with the equipment being used.

(13) Remove windshield from vehicle.

REMOVAL

The urethane adhesive holding the windshield to the opening pinch weld (fence) can be cut using a sharp cold knife from the exterior of the vehicle. Using the cold knife method is effective if the windshield is already broken. If the glass must be salvaged, cutting the urethane adhesive from the interior of the vehicle using a reciprocating or oscillating power knife is recommended.

(1) Remove inside rear view mirror.

(2) Remove cowl cover. (Refer to 23 - BODY/INTERIOR/COWL TRIM COVER - REMOVAL).

(3) Remove drip rail weatherstrips as necessary to gain access to screws holding windshield side moldings to A-pillars.

(4) Remove screws holding windshield side moldings to A-pillars

(5) Remove windshield moldings. (Fig. 2)Pull outward on molding at the bottom of A-pillars using pliers.

(6) Cut urethane bonding from around windshield using a suitable sharp cold knife. A pneumatic cutting device can be used if available. (Fig. 3)

(7) Separate windshield from vehicle.

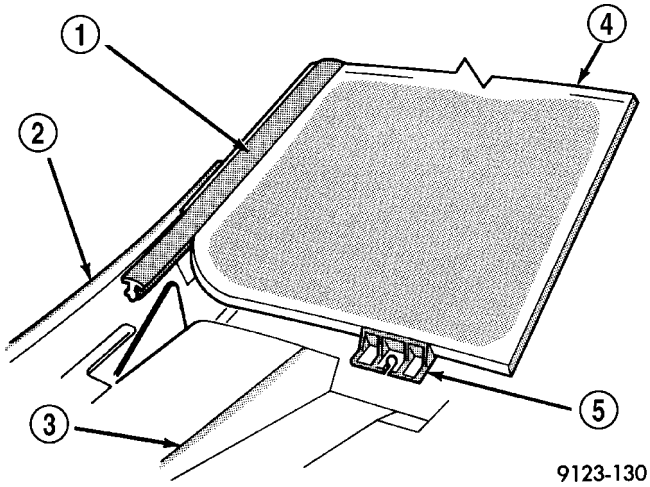

Fig. 2 Windshield Moldings

1 - MOLDING
2 - FENDER
3 - COWL
4 - WINDSHIELD
5 - SUPPORT SPACER

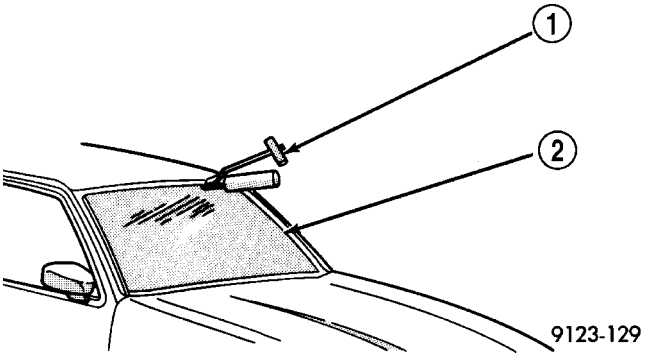

Fig. 3 Cut Urethane Around Windshield

1 - COLD KNIFE
2 - WINDSHIELD

WINDSHIELD (Continued)

INSTALLATION

INSTALLATION - JR-27

CAUTION: Open the left front door glass before installing windshield to avoid pressurizing the passenger compartment. If a door is slammed before urethane bonding is cured, water leaks can result.
Allow the urethane at least 24 hours to cure before returning the vehicle to use.
To avoid stressing the replacement windshield, the urethane bonding material on the windshield fence should be smooth and consistent to the shape of the replacement windshield. The support spacers should be cleaned and properly installed on weld studs or repair screws at bottom of windshield opening.

NOTE: The JR 27 uses adjustable support spacers along the bottom. Once the support spacers are set, use care not to move them.

(1) Place replacement windshield into windshield opening and position glass in the center of the opening against the support spacers.
(2) Verify the glass lays evenly against the pinch weld fence at the sides, top and bottom of the replacement windshield. If not, the pinch weld fence must be formed to the shape of the new glass.
(3) Move the support spacers as necessary so that the top of the windshield aligns with the marks on the header, from the original windshield.
(4) Place a piece of tape over the ratcheting portion of the bottom support spacer to prevent them from moving.
(5) Repeat Step 3 and Step 4for the opposite side of the windshield.
(6) Mark the glass at the support spacers with a grease pencil or pieces of masking tape and ink pen to use as a reference for installation (Fig. 4).
(7) Remove replacement windshield from windshield opening.
(8) Position the windshield inside up on a suitable work surface with two padded, wood 10 cm by 10 cm by 50 cm (4 in. by 4 in. by 20 in.) blocks, placed parallel 75 cm (2.5 ft.) apart (Fig. 5).

WARNING: DO NOT USE SOLVENT BASED GLASS CLEANER TO CLEAN WINDSHIELD BEFORE APPLYING GLASS PREP AND PRIMER. POOR ADHESION CAN RESULT.

(9) Clean inside of windshield with ammonia based glass cleaner and lint-free cloth.
(10) Apply Glass Prep adhesion promoter 25 mm (1 in.) wide around perimeter of windshield and wipe with clean/dry lint-free cloth until no streaks are visible.

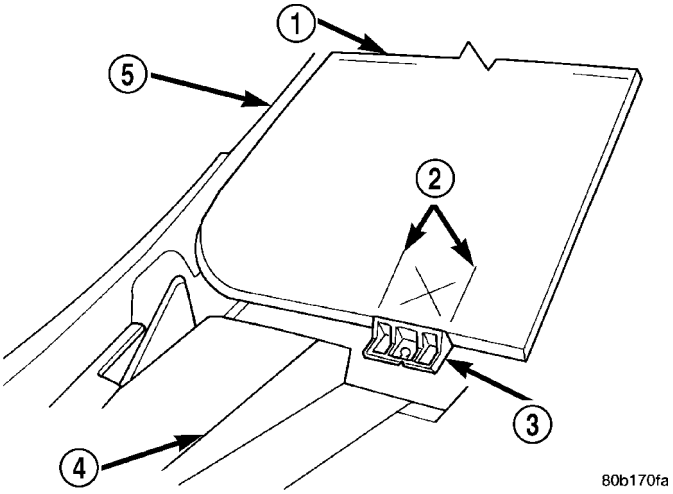

Fig. 4 Center Windshield and Mark at Support Spacers

1 - WINDSHIELD
2 - MARKS
3 - ADJUSTABLE SUPPORT SPACER
4 - COWL
5 - A-PILLAR

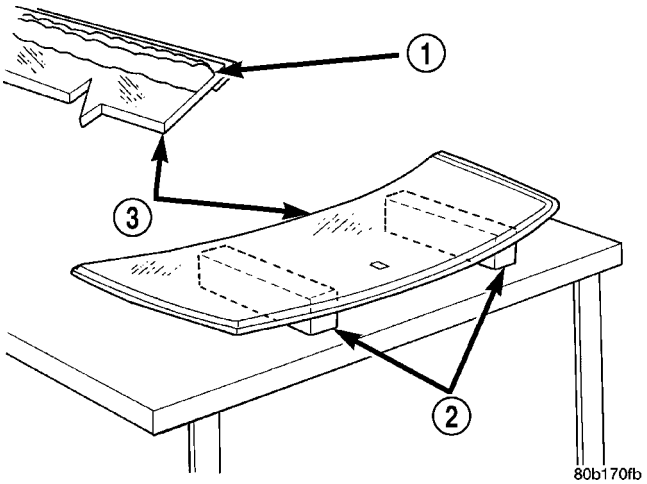

Fig. 5 Work Surface Set Up

1 - URETHANE BEAD AROUND GLASS 7mm (.3 in.) FROM EDGE
2 - BLOCKS
3 - WINDSHIELD

(11) Apply Glass Primer 25 mm (1 in.) wide around perimeter of windshield. Allow at least three minutes drying time.
(12) Using a razor knife, remove as much original urethane as possible. Do not damage paint on windshield fence.
(13) Apply pinch weld primer 15 mm (.75 in.) wide around the windshield fence. Allow at least three minutes drying time.
(14) If a low viscosity urethane adhesive is used, install compression spacers on the fence around the windshield opening at original locations (Fig. 6).

WINDSHIELD (Continued)

(15) Apply a 10 mm (0.4 in.) bead of urethane on center line of windshield fence.

(16) With the aid of a helper, position the windshield over the windshield opening. Align the reference marks at the bottom of the windshield to the support spacers.

(17) Slowly lower windshield glass to windshield opening fence. Push windshield inward until glass is flush to A-pillars (Fig. 7).

(18) Clean access urethane from exterior with Mopar® Super Kleen or equivalent.

(19) Apply 150 mm (6 in.) lengths of 50 mm (2 in.) masking tape spaced 250 mm (10 in.) apart to hold molding in place until urethane cures.

(20) Install cowl cover and wipers.

(21) Install inside rear view mirror to header.

(22) After urethane has cured, remove tape strips and water test windshield to verify repair.

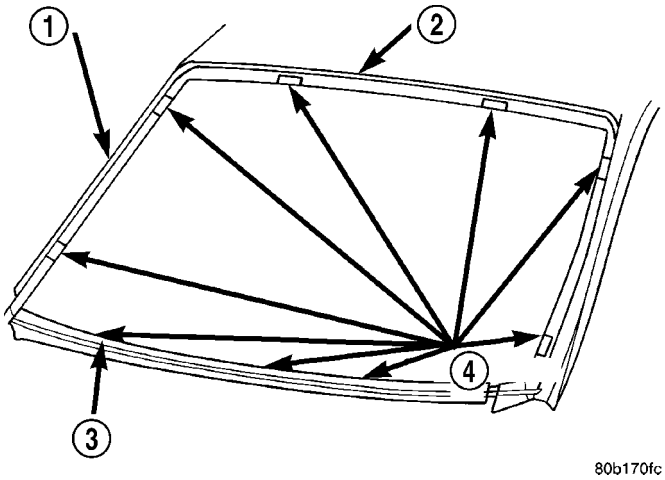

Fig. 6 Position Urethane Compression Spacers – Typical

1 - A-PILLAR
2 - ROOF PANEL
3 - WINDSHIELD OPENING
4 - SPACERS

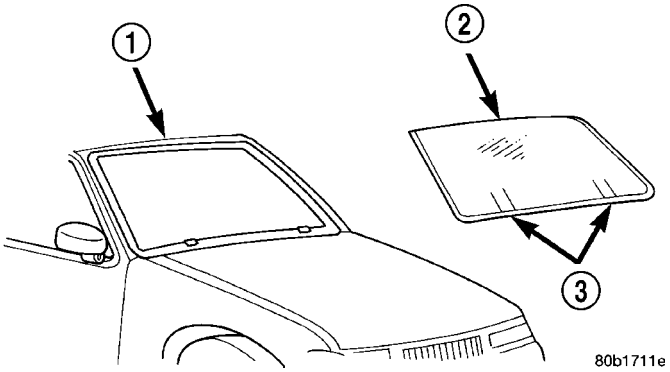

Fig. 7 Lower Windshield Into Position

1 - FENCE
2 - WINDSHIELD WITH URETHANE APPLIED
3 - REFERENCE MARKS

INSTALLATION

CAUTION: Open the left front door glass before installing windshield to avoid pressurizing the passenger compartment. If a door is slammed before urethane bonding is cured, water leaks can result. Allow the urethane at least 24 hours to cure before returning the vehicle to use.
To avoid stressing the replacement windshield, the urethane bonding material on the windshield fence should be smooth and consistent to the shape of the replacement windshield. The support spacers should be cleaned and properly installed on weld studs or repair screws at bottom of windshield opening.

(1) Place replacement windshield into position and center in the opening against the support spacers.

(2) Verify the glass lays evenly against the pinch weld fence at the sides, top and bottom of the replacement windshield. If not, the pinch weld fence must be formed to the shape of the new glass.

(3) Mark the glass at the support spacers with a grease pencil or pieces of masking tape and ink pen to use as a reference for installation (Fig. 8).

(4) Remove replacement windshield from windshield opening.

(5) Position the windshield inside up on a suitable work surface with two padded, wood 10 cm by 10 cm by 50 cm (4 in. by 4 in. by 20 in.) blocks, placed parallel 75 cm (2.5 ft.) apart (Fig. 9).

WARNING: DO NOT USE SOLVENT BASED GLASS CLEANER TO CLEAN WINDSHIELD BEFORE APPLYING GLASS PREP AND PRIMER. POOR ADHESION CAN RESULT.

(6) Clean inside of windshield with ammonia based glass cleaner and lint free cloth.

(7) Apply molding to perimeter of windshield.

(8) Apply Glass Prep adhesion promoter 25 mm (1 in.) wide around perimeter of windshield and wipe with clean/dry lint free cloth until no streaks are visible.

(9) Apply Glass Primer 25 mm (1 in.) wide around perimeter of windshield. Allow at least three minutes drying time.

(10) Using a razor knife, remove as much original urethane as possible. Do not damage paint on windshield fence.

(11) Apply pinch weld primer 15 mm (.75 in.) wide around the windshield fence. Allow at least three minutes drying time.

(12) If a low viscosity urethane adhesive is used, install compression spacers on the fence around the windshield opening (Fig. 10).

WINDSHIELD (Continued)

(13) Apply a 10 mm (0.4 in.) bead of urethane on center line of windshield fence.

(14) With the aid of a helper, position the windshield over the windshield opening. Align the reference marks at the bottom of the windshield to the support spacers.

(15) Slowly lower windshield glass to windshield opening fence. Guide the molding into proper position as necessary. Push windshield inward molding is flush to roof line and A-pillars.

(16) Clean access urethane from exterior with Mopar® Super Kleen or equivalent.

(17) Apply 150 mm (6 in.) lengths of 50 mm (2 in.) masking tape spaced 250 mm (10 in.) apart to hold molding in place until urethane cures.

(18) Install windshield side moldings and drip rail weatherstrips.

(19) Install cowl cover and wipers.

(20) Install inside rear view mirror.

(21) After urethane has cured, remove tape strips and water test windshield to verify repair.

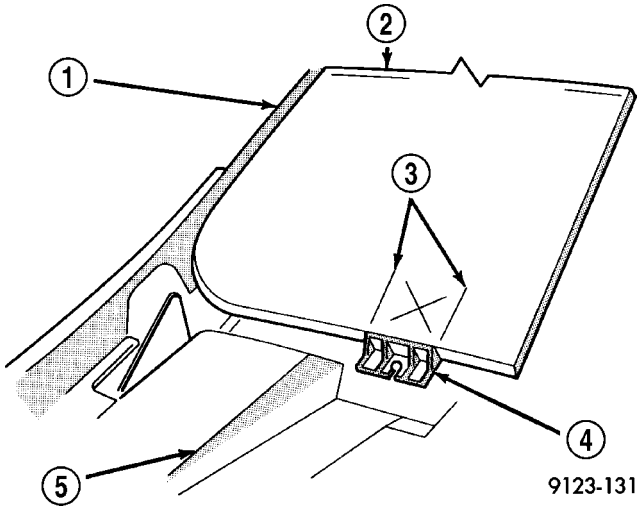

Fig. 8 Center Windshield and Mark at Support Spacers

1 - A-PILLAR
2 - WINDSHIELD
3 - MARKS
4 - SUPPORT SPACER
5 - COWL

BACKLITE

REMOVAL

For a description of tools and adhesive systems that are recommended for use in this procedure (Refer to 23 - BODY/STATIONARY GLASS/WINDSHIELD - REMOVAL).

WARNING: DO NOT OPERATE THE VEHICLE WITHIN 24 HOURS OF WINDSHIELD INSTALLATION. IT TAKES AT LEAST 24 HOURS FOR URETHANE ADHESIVE TO CURE. IF IT IS NOT CURED, THE WINDSHIELD MAY NOT PERFORM PROPERLY IN AN ACCIDENT. BE SURE TO REFER TO THE URETHANE MANUFACTURER'S DIRECTIONS FOR CURING TIME SPECIFICATIONS, AND DO NOT USE ADHESIVE AFTER ITS EXPIRATION DATE.

CAUTION: Open the left front door glass before installing the rear window to avoid pressurizing the passenger compartment if a door is slammed before the urethane bonding is fully cured. Water leaks can result

(1) Remove rear window moldings.

(2) Remove upper quarter trim panel.

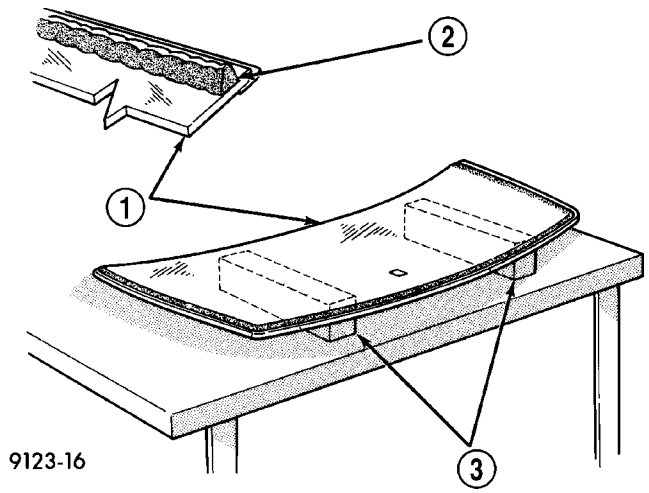

Fig. 9 Work Surface Set up and Molding Installation

1 - WINDSHIELD AND MOULDINGS
2 - URETHANE BEAD AROUND GLASS 7mm (.3 in.) FROM EDGE
3 - BLOCKS

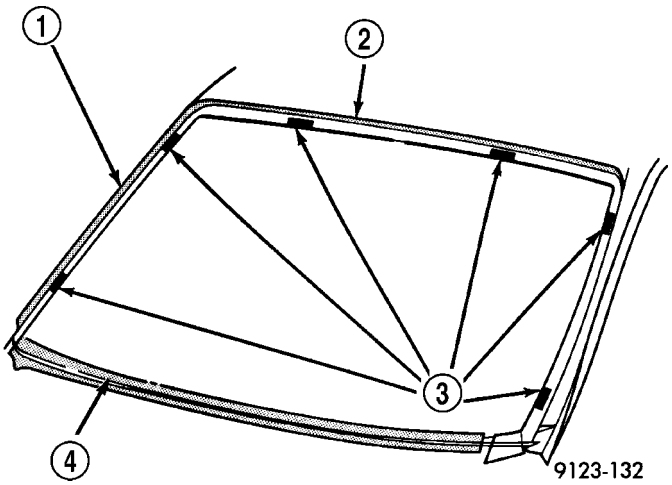

Fig. 10 Position Urethane Compression Spacers

1 - A-PILLAR
2 - ROOF PANEL
3 - SPACERS
4 - WINDSHIELD OPENING

BACKLITE (Continued)

(3) Disengage wire connectors from rear window defogger, and rear window mounted radio antenna, if so equipped.

(4) Remove C-pillar applique, if so equipped.

WARNING: WEAR EYE AND HAND PROTECTION WHEN HANDLING SAFETY GLASS. PERSONAL INJURY CAN RESULT.

CAUTION: Do not damage body or trim finish when cutting out glass or applying fence primer.

(5) Cut the urethane around the perimeter of the rear window glass. (Refer to 23 - BODY/STATIONARY GLASS/WINDSHIELD - REMOVAL).

(6) Remove the rear window from the vehicle.

INSTALLATION

For a description of tools and adhesive systems that are recommended for use in this procedure (Refer to 23 - BODY/STATIONARY GLASS/WINDSHIELD - INSTALLATION).

WARNING: DO NOT OPERATE THE VEHICLE WITHIN 24 HOURS OF WINDSHIELD INSTALLATION. IT TAKES AT LEAST 24 HOURS FOR URETHANE ADHESIVE TO CURE. IF IT IS NOT CURED, THE WINDSHIELD MAY NOT PERFORM PROPERLY IN AN ACCIDENT. BE SURE TO REFER TO THE URETHANE MANUFACTURER'S DIRECTIONS FOR CURING TIME SPECIFICATIONS, AND DO NOT USE ADHESIVE AFTER ITS EXPIRATION DATE.

CAUTION: Open the left front door glass before installing the rear window to avoid pressurizing the passenger compartment if a door is slammed before the urethane bonding is fully cured. Water leaks can result

(1) Prepare the work area, window fence, and glass the same way as described in the Windshield section of this group (Refer to 23 - BODY/STATIONARY GLASS/WINDSHIELD - INSTALLATION).

(2) Place fence spacers at the locations shown (Fig. 11).

(3) Install the rear window molding on glass.

(4) Apply a 10 mm (0.4 in.) bead of urethane along center line of window fence.

(5) Install the glass in the same manner described in the Windshield section of this group (Refer to 23 - BODY/STATIONARY GLASS/WINDSHIELD - INSTALLATION) (Fig. 11).

(6) Connect rear window defogger wiring, and rear window mounted radio antenna, if so equipped.

(7) Install C-pillar applique, and interior trim.

(8) After urethane has cured, water test rear window to verify repair. Verify rear window defogger operation.

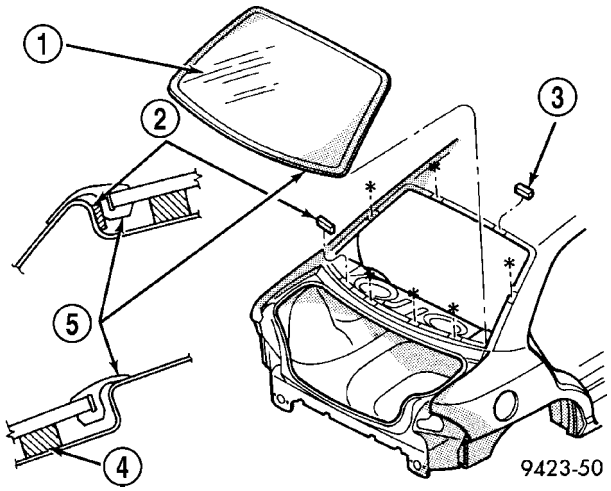

Fig. 11 Rear Window Glass – Typical

1 - REAR WINDOW GLASS
2 - SHIM
3 - SPACERS
4 - URETHANE
5 - MOLDING

SUNROOF

TABLE OF CONTENTS

	page
SUNROOF	
DESCRIPTION	124
DIAGNOSIS AND TESTING - SUNROOF	124
SUNROOF CONTROL SWITCH	
REMOVAL	126
INSTALLATION	126
SUNROOF DRIVE MOTOR	
REMOVAL	126
INSTALLATION	127
ADJUSTMENTS	
ADJUSTMENT	127
SUNROOF GLASS PANEL	
REMOVAL	128
INSTALLATION	128
ADJUSTMENTS	
ADJUSTMENT	128
SUNROOF GLASS PANEL SEAL	
REMOVAL	128
INSTALLATION	128
SUNROOF HOUSING DRAIN HOSE	
REMOVAL	128
INSTALLATION	129
SUNROOF MODULE ASSEMBLY	
REMOVAL	130
INSTALLATION	130
OPENING TRIM LACE	
REMOVAL	130
INSTALLATION	130
SUNSHADE	
REMOVAL	
REMOVAL	131
REMOVAL	131
INSTALLATION	132
WIND DEFLECTOR	
REMOVAL	132
INSTALLATION	132
SUNROOF EXPRESS MODULE	
REMOVAL	133
INSTALLATION	133

SUNROOF

DESCRIPTION

WARNING: Keep fingers and other body parts out of sunroof opening at all times.

The sunroof features a power sliding glass panel and a sunshade which can be manually positioned anywhere along its travel, rearward of glass panel front edge.

The sunroof is electrically operated from a three switches located on the windshield header, rearward of the map lamp. To operate the sunroof the ignition switch must be in either the Accessory or On/Run position. One switch (vent) is a push button type and opens the sunroof to the vent position only. The other switch (open/close) is a rocker type for opening and closing the sunroof. Pressing and releasing the open button once the sunroof will express open and the wind deflector will raise. If the button is pressed a second time the sunroof will stop in that position. Pressing and holding the close button will close the sunroof. If the close button is released the sunroof will stop in that position.

DIAGNOSIS AND TESTING - SUNROOF

Before beginning sunroof diagnostics verify that all other power accessories are in proper operating condition. Refer to Sunroof Diagnostic Chart for possible causes. If not, a common electrical problem may exist. (Refer to 8 - ELECTRICAL/WIRING DIAGRAM INFORMATION - DESCRIPTION) for circuit, splice and component descriptions. Check the condition of the circuit protection (20 amp circuit breaker in cavity 19 of the Junction Block). Inspect all wiring connector pins for proper engagement and continuity. Check for battery voltage at the power sunroof controller, (Refer to 8W - WIRING DIAGRAMS), for circuit information. If battery voltage of more than 10 volts is detected at the controller, proceed with the following tests (the controller will not operate at less than 10 volts).

Before beginning diagnosis for wind noise or water leaks, verify that the problem was not caused by releasing the control switch before the sunroof was fully closed. The sunroof module has a water management system. If however, the sunroof glass is in a partial closed position, high pressure water may be forced beyond the water management system boundaries and onto the headlining.

SUNROOF (Continued)

SUNROOF DIAGNOSIS CHART

SYMPTOM	POSSIBLE CAUSE
Sunroof motor inoperative.	Faulty control switch. Faulty circuit ground between sunroof electronics module, control switch, and body harness. Faulty power circuit between sunroof electronics module, control switch, and body harness. Faulty sunroof drive motor. Faulty sunroof electronics module. Faulty sunroof drive motor or electronics module.
Audible whine when switch is depressed, sunroof does not operate.	Faulty sunroof drive motor. Binding cable.
Audible clicking or ratcheting when switch is pressed, sunroof does not operate.	Broken or worn drive cable. Worn drive motor gear. Mechanisms not synchronized.
Sunroof vents and opens, but does not close.	Binding cable. Faulty circuit. Faulty control switch. Faulty sunroof electronic module. Faulty drive motor.
Sunroof vents, but does not open.	Binding cable or mechanism. Faulty circuit. Faulty switch. Faulty sunroof electronic module.
Sunroof does not vent	Binding cable or mechanism. Faulty circuit. Faulty control switch. Faulty sunroof electronic module.
Sunroof water leak.	Drain tubes clogged or kinked or disconnected from the sunroof. Glass panel improperly adjusted. Faulty glass panel seal.
Gurgling sound from sunroof	Low spot in drain hose routing, allowing water to stand.
Wind noise from sunroof.	Front of glass panel too high or rear too low. Wind deflector not deploying. Glass not centered in opening. Faulty glass panel seal.
Rattles from open sunroof while driving	Loose or broken attaching hardware. Worn or broken mechanism.

SUNROOF (Continued)

WATER DRAINAGE AND WIND NOISE DIAGNOSIS

The sliding glass panel is designed to minimize seal water entry with a snug fit between the roof and the seal. The fit can be checked by inserting a piece of paper between the roof and the seal. The piece of paper should have some resistance when pulled out when the glass panel is in the closed position. The sunroof housing will drain off a minimum amount of water. Excessive wind noise could result if the gap clearances are exceeded. The sunroof glass panel may need to be adjusted. (Refer to 23 - BODY/SUNROOF/GLASS PANEL - DESCRIPTION).

Adequate drainage is provided by a drain trough in the sunroof housing which encircles the sliding glass panel and leads to drain hoses. If a wet headliner or other water leak complaints are encountered, before performing any adjustments, first ensure that the drainage system is not plugged or disconnected. Use a pint container to pour water into the sunroof housing drain trough. If water flow is restricted, use compressed air to blow out any material plugging the drain system. Retest system again.

To further check for a disconnected drain hose:

(1) Remove A-pillar trim, sun visors, and map lamps/mini console.

(2) Remove sunroof opening trim lace. (Refer to 23 - BODY/SUNROOF/OPENING TRIM LACE - REMOVAL).

(3) Lower headliner as necessary to gain access to sunroof housing drain tubes. (Refer to 23 - BODY/INTERIOR/HEADLINER - REMOVAL).

(4) Repair as necessary.

SUNROOF CONTROL SWITCH

REMOVAL

(1) Using a flat blade tool, release switch from the headliner (Fig. 1).

(2) Disconnect the wire connector from the switch.

INSTALLATION

(1) Connect the wire connector to the control switch.

(2) Install control switch into headliner.

(3) Test sunroof operation.

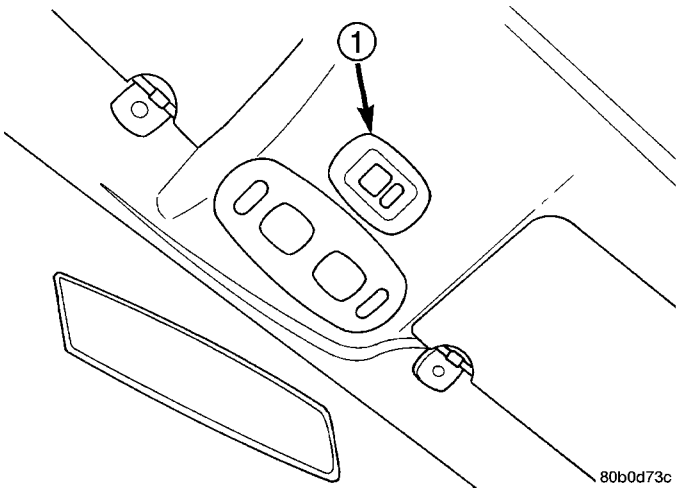

Fig. 1 Sunroof Control Switch

1 - SUN ROOF CONTROL SWITCH

SUNROOF DRIVE MOTOR

REMOVAL

NOTE: The sunroof system is timed from the factory so that the motor shuts off automatically when the sunroof window reaches a certain position. Extreme care must be taken when removing the motor from the sunroof module assembly or this timing may be thrown off causing damage to the sunroof system. Anytime the motor needs to be removed from the module assembly the sunroof window must be in the FULLY CLOSED POSITION if possible.

If glass panel is not in the fully closed position and the motor is removed or inoperative, (Refer to 23 - BODY/SUNROOF/DRIVE MOTOR - ADJUSTMENTS)

(1) Remove A-pillar trim (Refer to 23 - BODY/INTERIOR/A-PILLAR TRIM - REMOVAL)

(2) Remove sun visors (Refer to 23 - BODY/INTERIOR/SUN VISOR - REMOVAL)

(3) Remove map lamps/mini console

(4) Disconnect the control switch wire connector.

(5) Remove sunroof opening trim lace. (Refer to 23 - BODY/SUNROOF/OPENING TRIM LACE - REMOVAL).

(6) Remove headliner as necessary to gain access to sunroof drive motor. (Refer to 23 - BODY/INTERIOR/HEADLINER - REMOVAL).

(7) Disconnect the drive motor wire harness connectors.

(8) Remove drive motor attaching screws.

(9) Remove motor from the sunroof housing

SUNROOF DRIVE MOTOR (Continued)

INSTALLATION

NOTE: Before installing a new motor or the original motor ensure that the sunroof glass panel is in the FULLY CLOSED POSITION. If sunroof glass panel is not in the FULLY CLOSED POSITION (Refer to 23 - BODY/SUNROOF/DRIVE MOTOR - ADJUSTMENTS). If the original drive motor or new drive motor is not in the CLOSED POSITION (Refer to 23 - BODY/SUNROOF/DRIVE MOTOR - ADJUSTMENTS). A new drive motor comes in the PARK POSITION, but if the drive motor not in the fully closed position (Refer to 23 - BODY/SUNROOF/DRIVE MOTOR - ADJUSTMENTS).

(1) Ensure that sunroof module is in the FULLY closed position before mounting the motor. If not in the fully closed position (Refer to 23 - BODY/SUNROOF/DRIVE MOTOR - ADJUSTMENTS).

(2) To time the drive motor (Refer to 23 - BODY/SUNROOF/DRIVE MOTOR - ADJUSTMENTS).

(3) Place drive motor into position on the sunroof housing and install attaching screws.

(4) Connect drive motor, and control switch wire connectors.

(5) Test sunroof drive motor operation, adjust as necessary (Refer to 23 - BODY/SUNROOF/DRIVE MOTOR - ADJUSTMENTS).

(6) Install sunroof glass panel (Refer to 23 - BODY/SUNROOF/GLASS PANEL - INSTALLATION).

(7) Verify sunroof operation and alignment, and adjust as necessary. (Refer to 23 - BODY/SUNROOF/GLASS PANEL - ADJUSTMENTS).

(8) Installing the headliner (Refer to 23 - BODY/INTERIOR/HEADLINER - INSTALLATION).

(9) Install sunroof opening trim lace. (Refer to 23 - BODY/SUNROOF/OPENING TRIM LACE - INSTALLATION).

ADJUSTMENTS

ADJUSTMENT

DRIVE MOTOR

NOTE: The timing of both the drive motor and the sunroof module play a critical roles in the proper function of the sunroof. The sunroof assembly come in the proper position. As long as the motor is not has not been removed. If the drive motor is removed and cycled the motor will have to be Timed. If the sunroof glass panel has been moved from the park position with the drive motor removed (Refer to 23 - BODY/SUNROOF/GLASS PANEL - ADJUSTMENTS).

(1) With drive motor removed from the sunroof assembly check the time of the drive motor.

(2) Plug the wire connectors to the drive motor. Do not attach motor to sunroof assembly.

(3) Turn ignition switch to the accessory position, tap the drive motor open position switch until the motor timing mark align up straight across (Fig. 2).

(4) Install drive motor. (Refer to 23 - BODY/SUNROOF/DRIVE MOTOR - INSTALLATION).

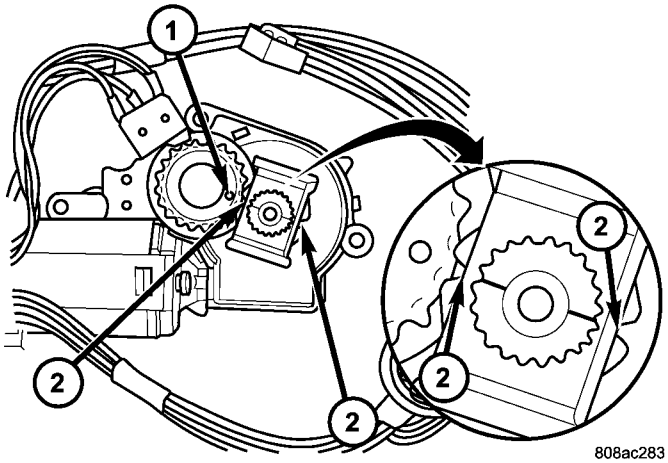

Fig. 2 Sunroof Drive Motor Timing

1 - HOLE
2 - TIMING MARKS

SUNROOF MODULE

NOTE: If the drive motor is removed and the sunroof glass or cables are moved the sunroof module will have to be timed.

(1) With the drive motor removed.

(2) Remove sunroof glass panel (Refer to 23 - BODY/SUNROOF/GLASS PANEL - REMOVAL).

(3) Now place both right and left arms in the closed position. Using a screwdriver, push the plastic cable all the way forward in the track until the glass mounting arm drops into the closed position.

(4) Repeat this on the other side.

(5) To verify correct timing, there is an 1/8 inch hole in the cable ramp that must be aligned with the front glass mounting screw hole.

(6) Using an awl, verify alignment of both right and left timing holes. The tracks will now be timed to the fully closed position.

(7) With the drive motor in the fully closed position. Install drive motor (Refer to 23 - BODY/SUNROOF/DRIVE MOTOR - INSTALLATION).

SUNROOF GLASS PANEL

REMOVAL

(1) Slide sunshade rearward to the open position.
(2) Move the glass panel to the vent position.
(3) Remove the glass panel screws on each side (Fig. 3).
(4) Lift off glass panel and remove from vehicle.

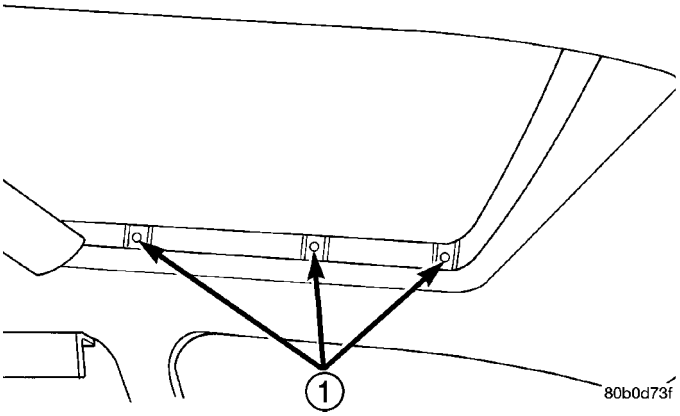

Fig. 3 Sunroof Glass Panel Screws

1 - ATTACHING SCREWS

INSTALLATION

(1) Position glass panel on to mechanism.
(2) Start the six attaching screws.
(3) Close glass.
(4) Center glass in opening by running a business card around the glass.
(5) Adjust front height of glass, just below roof panel.
(6) Tighten front two screws.
(7) Adjust rear height of glass, just above roof panel.
(8) Tighten remaining screws.
(9) Verify sunroof operation and alignment. Check fit and adjust as necessary, (Refer to 23 - BODY/SUNROOF/GLASS PANEL - DESCRIPTION).

ADJUSTMENTS

ADJUSTMENT

(1) Move the sunshade rearward to the open position.
(2) Move the sunroof glass panel to the fully closed position.
(3) Loosen the forward and center screws on each side enough to make the front adjustment.
(4) Adjust the front of the sunroof glass panel 1 mm (1/32 inch) below the top surface of the roof panel.
(5) Tighten the front two screws.
(6) Loosen the rear screws on each side enough to make the rear adjustment.
(7) Adjust the rear of the sunroof glass panel 1 mm (1/32 inch) above the top surface of the roof panel.
(8) Tighten the rear two screws.
(9) Check for proper fit. If not OK, repeat glass panel adjustment. If OK, tighten the center two screws.

SUNROOF GLASS PANEL SEAL

REMOVAL

(1) Remove sunroof glass panel. (Refer to 23 - BODY/SUNROOF/GLASS PANEL - REMOVAL).
(2) Grasp the seal and pull seal away from the glass panel. The seal is a one piece seal.

INSTALLATION

NOTE: Always position seal seam on center of the passenger side of glass panel.

(1) Install seal on glass. Using care working the seal around the glass, being careful not to over stretch the seal while installing.
(2) Install sunroof glass panel.
(3) Test sunroof operation, adjust as necessary.

SUNROOF HOUSING DRAIN HOSE

REMOVAL

FRONT HOSES

(1) Move glass panel to the fully closed position.
(2) Remove sunroof opening trim lace. (Refer to 23 - BODY/SUNROOF/OPENING TRIM LACE - REMOVAL).
(3) Disconnect the control switch and wire connector.
(4) Remove headliner. (Refer to 23 - BODY/INTERIOR/HEADLINER - REMOVAL).
(5) Disconnect the drain hose from the sunroof housing (Fig. 4).
(6) Drain any liquid from hose connection, if necessary.
(7) Attach new drain hose to old hose with tape that is to be replaced.
(8) Work the old hose back and forth to loosen the sealer.
(9) Pull the old hose out through the bottom and the new hose through.

SUNROOF HOUSING DRAIN HOSE (Continued)

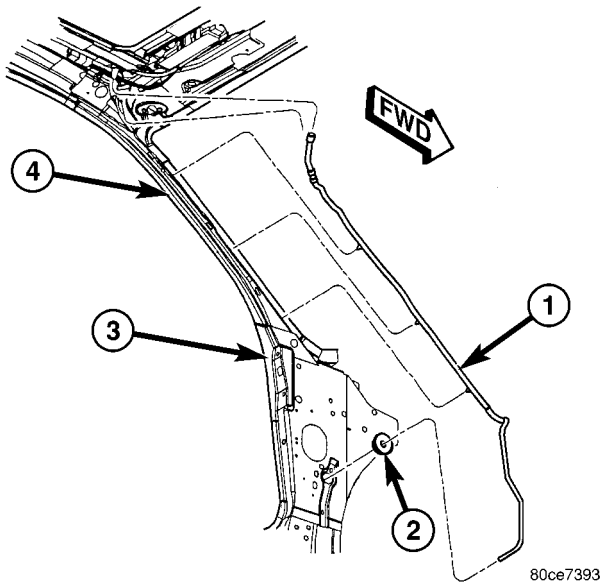

Fig. 4 FRONT DRAIN HOSE

1 - FRONT DRAIN TUBE
2 - DRAIN TUBE GRUMMET
3 - COWL SIDE PANEL
4 - WINDSHIELD OPENING SIDE OUTER FRAME

REAR HOUSING HOSE

(1) Move glass panel to the fully closed position.

(2) Remove sunroof opening trim lace. (Refer to 23 - BODY/SUNROOF/OPENING TRIM LACE - REMOVAL).

(3) Disconnect the control switch and wire connector.

(4) Remove headliner. (Refer to 23 - BODY/INTERIOR/HEADLINER - REMOVAL).

(5) Disconnect the drain hose from the sunroof housing (Fig. 5).

(6) Drain any liquid from hose connection, if necessary.

(7) Attach new drain hose to old hose with tape that is to be replaced.

(8) Work the old hose back and forth to loosen the sealer.

(9) Pull the old hose out through the bottom and the new hose through.

INSTALLATION

FRONT HOSES

(1) Connect the drain hose to the sunroof housing and test drainage (Fig. 4).

(2) Set headliner into position.

(3) Connect express module, drive motor, and control switch wire connectors.

(4) Test sunroof operation, adjust as necessary.

(5) Finish installing headliner. (Refer to 23 - BODY/INTERIOR/HEADLINER - INSTALLATION).

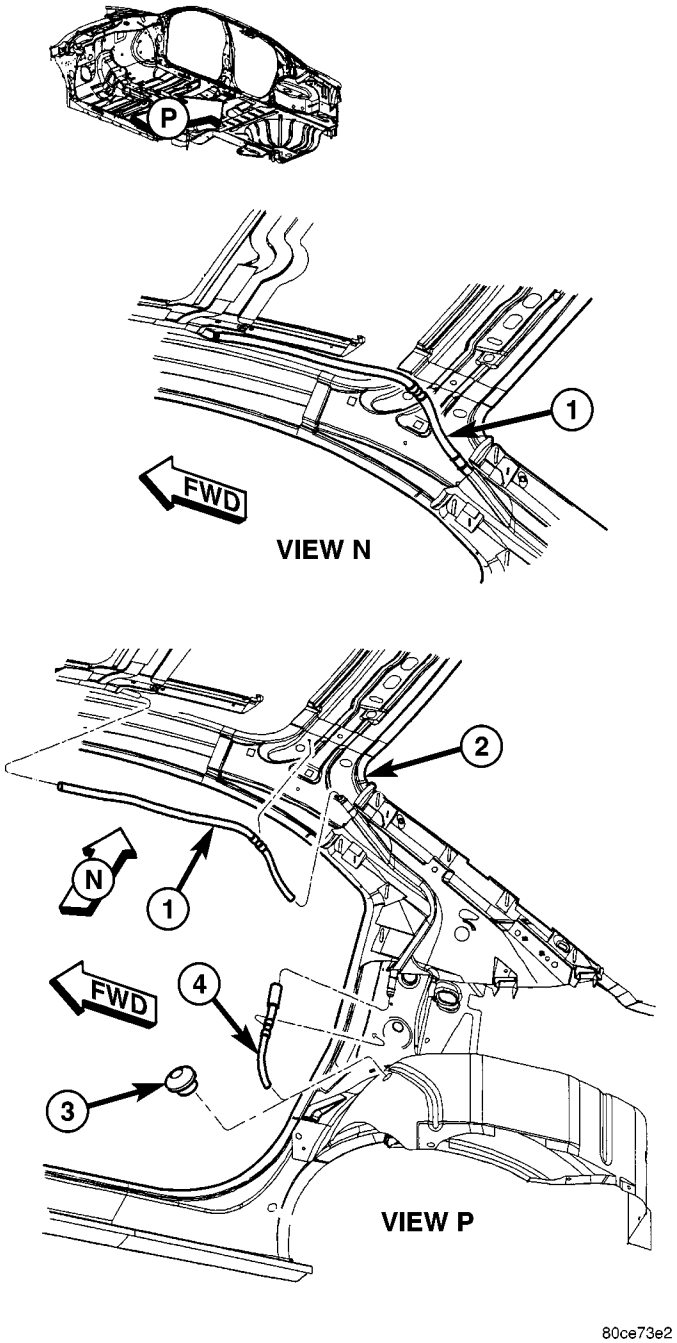

Fig. 5 REAR DRAIN TUBE

1 - REAR DRAIN TUBE
2 - QUARTER INNER UPPER PANEL
3 - DRAIN TUBE GROMMET
4 - REAR DRAIN LOWER TUBE

(6) Install sunroof opening trim lace. (Refer to 23 - BODY/SUNROOF/OPENING TRIM LACE - INSTALLATION).

(7) Connect the control switch wire connector. Install control switch.

SUNROOF HOUSING DRAIN HOSE (Continued)

REAR HOUSING HOSE

(1) Connect the drain hose to the sunroof housing and test drainage (Fig. 5).
(2) Set headliner into position.
(3) Connect express module, drive motor, and control switch wire connectors.
(4) Test sunroof operation, adjust as necessary.
(5) Finish installing headliner. (Refer to 23 - BODY/INTERIOR/HEADLINER - INSTALLATION).
(6) Install sunroof opening trim lace. (Refer to 23 - BODY/SUNROOF/OPENING TRIM LACE - INSTALLATION).
(7) Connect the control switch wire connector. Install control switch.

SUNROOF MODULE ASSEMBLY

REMOVAL

(1) Move glass panel to the fully closed position.
(2) Disconnect battery negative cable.
(3) Recline both front seats.
(4) Remove sunroof opening trim lace. (Refer to 23 - BODY/SUNROOF/OPENING TRIM LACE - REMOVAL).
(5) Remove control switch. (Refer to 23 - BODY/SUNROOF/CONTROL SWITCH).
(6) Disconnect wire harness.
(7) Remove headliner
(8) Disconnect the drain tubes from sunroof housing.
(9) Loosen fasteners attaching sunroof module assembly (Fig. 6).
(10) With the aid of a helper, remove fasteners attaching sunroof module assembly to roof panel.

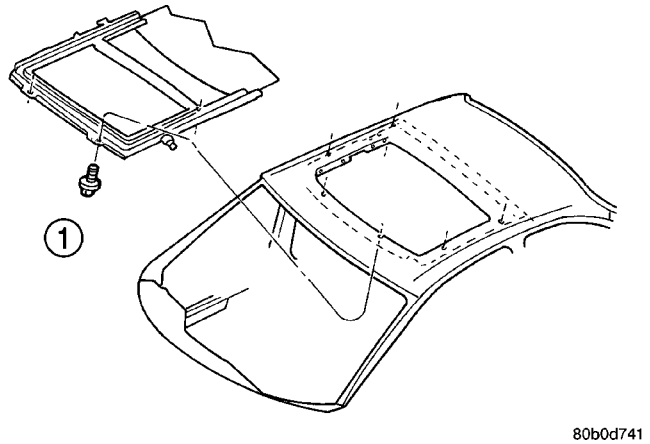

Fig. 6 Sunroof Module Assembly

1 - (6) SCREWS

INSTALLATION

NOTE: There are locating pins on the roof panel near the front corners of the sunroof opening that will help position the sunroof module correctly.

(1) With the Glass panel in the fully closed position.
(2) Raise rear end of sunroof module assembly and guide into position and start fasteners.
(3) Tighten the fasteners holding the sunroof module to roof panel. Tighten the fasteners to 11 N·m (97 in. lbs.) torque.
(4) Connect the drain tubes to the sunroof housing.
(5) Connect wire harness.
(6) Set headliner into position.
(7) Connect battery negative cable.
(8) Connect express module, drive motor, and control switch wire connectors.
(9) Test sunroof operation, adjust as necessary.
(10) Finish installing the headliner.
(11) Install sunroof opening trim lace. (Refer to 23 - BODY/SUNROOF/OPENING TRIM LACE - INSTALLATION).

OPENING TRIM LACE

REMOVAL

Remove lace by starting at the joint and pull one end of the lace away from the headliner until the entire lace is removed (Fig. 7).

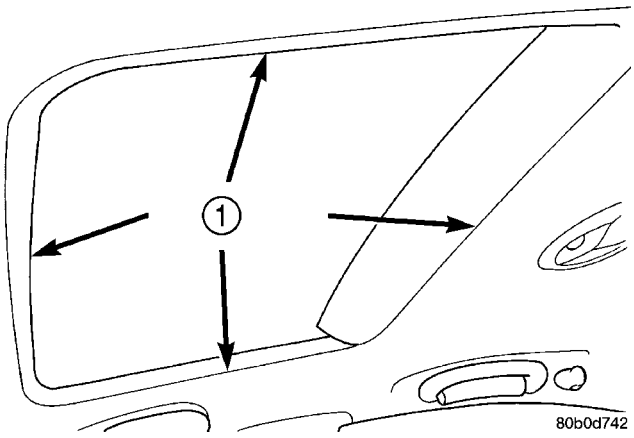

Fig. 7 Sunroof Opening Trim Lace

1 - OPENING TRIM LACE

INSTALLATION

Install lace by starting at the spot of the previous joint, fully seat the lace in place around the sunroof opening. Cut to fit if necessary.

SUNSHADE

REMOVAL

REMOVAL

(1) Place the sunroof glass panel in the vent position.

(2) Move the sunshade to the closed position

(3) From the outside of the vehicle, using a flat blade tool, disengage the rear sunshade guides. Pushing the guide toward the center of the vehicle (Fig. 8). Raise up on sunshade and slide it rearward out through the opening (Fig. 9). Release the front two guides and remove sunshade from the vehicle (Fig. 10).

CAUTION: Use care not to crease the sunshade when removing or installing.

(4) Remove the sunshade handle from sunshade by compressing the back side of the handle together and pull the handle out.

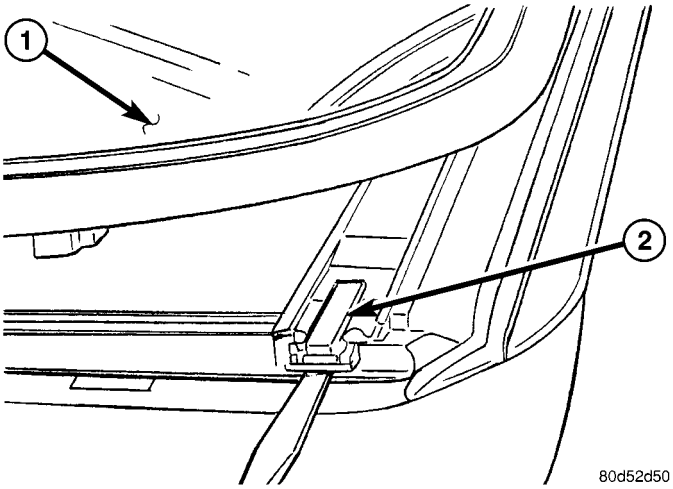

Fig. 8 SUNSHADE REAR GUIDE

1 - GLASS PANEL
2 - SUNSHADE REAR GUIDE

REMOVAL

(1) Place the sunroof glass panel in the vent position.

(2) Move the sunshade to the closed position

(3) From the outside of the vehicle, using a flat blade tool, disengage the rear sunshade guides. Pushing the guide toward the center of the vehicle (Fig. 11). Raise up on sunshade and slide it rearward out through the opening (Fig. 12). Release the front two guides and remove sunshade from the vehicle (Fig. 13).

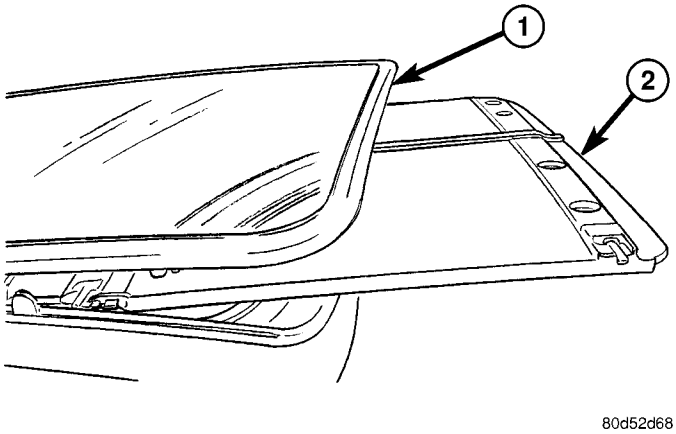

Fig. 9 SUNSHADE REMOVAL

1 - GLASS PANEL
2 - SUNSHADE REMOVAL

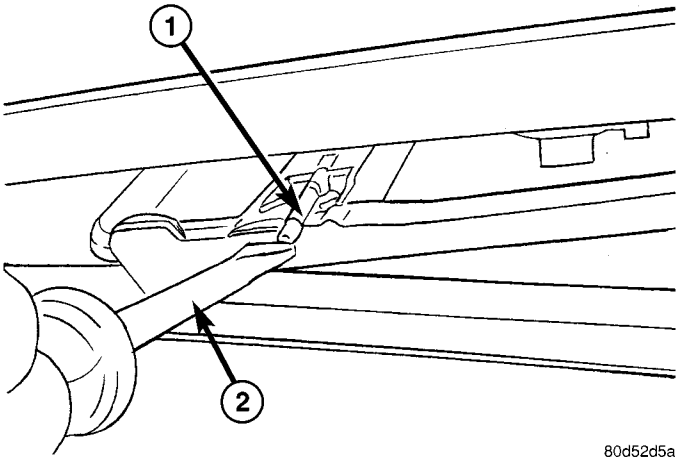

Fig. 10 SUNSHADE FRONT GUIDE

1 - SUNSHADE FRONT GUIDE
2 - SCREWDRIVER DEPRESSING FRONT GUIDE

CAUTION: Use care not to crease the sunshade when removing or installing.

(4) Remove the sunshade handle from sunshade by compressing the back side of the handle together and pull the handle out.

SUNSHADE (Continued)

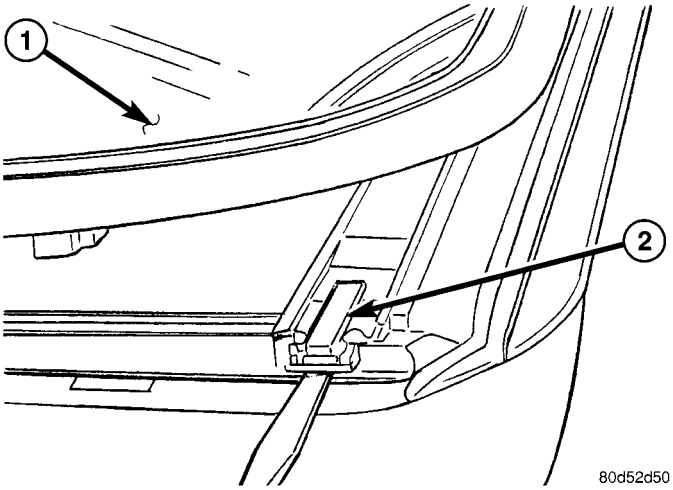

Fig. 11 SUNSHADE REAR GUIDE

1 - GLASS PANEL
2 - SUNSHADE REAR GUIDE

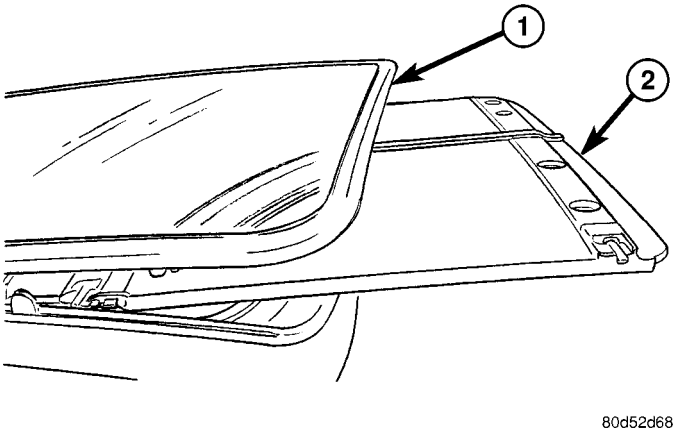

Fig. 12 SUNSHADE REMOVAL

1 - GLASS PANEL
2 - SUNSHADE REMOVAL

INSTALLATION

(1) Install sunshade handle into the sunshade, by pressing the handle into place until the tabs lock behind the sunshade.

(2) Install the sunshade into the vehicle between the roof and the glass panel in the vent position (Fig. 12).

(3) Move the sunshade to the closed position. Through the opening using a flat tool, engage the rear guides into the guide rails (Fig. 11).

(4) Slide sunshade rearward to access the front two guides. Engage the front guides into the guide rails (Fig. 13).

(5) Ensure the sunshade operation and operate the sunroof.

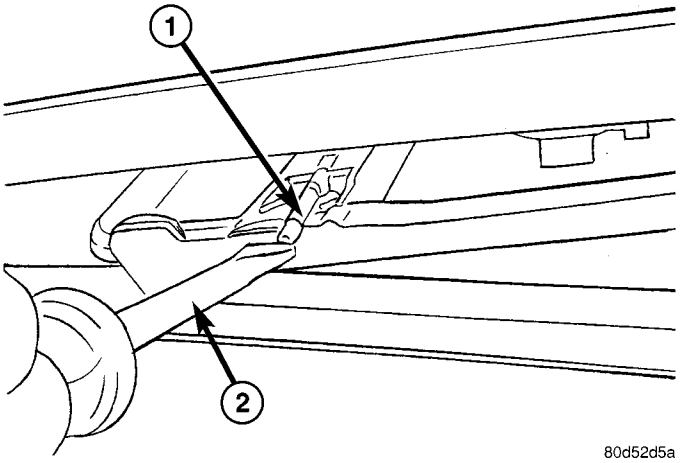

Fig. 13 SUNSHADE FRONT GUIDE

1 - SUNSHADE FRONT GUIDE
2 - SCREWDRIVER DEPRESSING FRONT GUIDE

WIND DEFLECTOR

REMOVAL

(1) Open sunroof glass panel.

(2) Remove hinge pins by pushing them outboard to release the wind deflector from sunroof housing (Fig. 14).

(3) Remove wind deflector (Fig. 15).

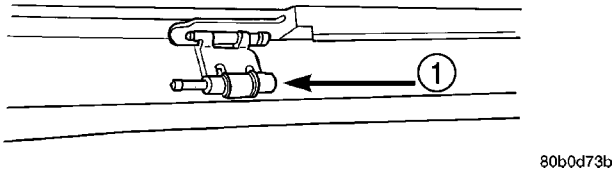

Fig. 14 Wind Deflector Hinge Pin

1 - PUSH

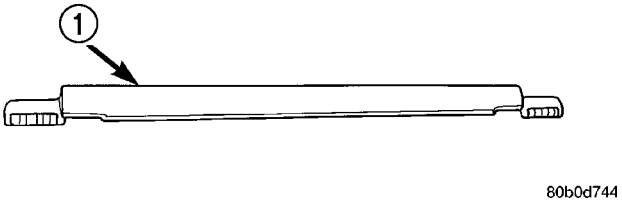

Fig. 15 Wind Deflector

1 - WIND DEFLECTOR

INSTALLATION

(1) Place wind deflector on wind deflector brackets.

(2) Install wind deflector hinge pins.

(3) Test sunroof operation.

SUNROOF EXPRESS MODULE

REMOVAL

(1) Remove A-pillar trim, sun visors, and map lamps/mini console.

(2) Remove sunroof opening trim lace. (Refer to 23 - BODY/SUNROOF/OPENING TRIM LACE - REMOVAL).

(3) Pull headliner down as necessary to gain access to sunroof express module.

(4) Disconnect the express module wire harness connectors (Fig. 16).

(5) Remove express module from the keyway by sliding module towards the center of the vehicle.

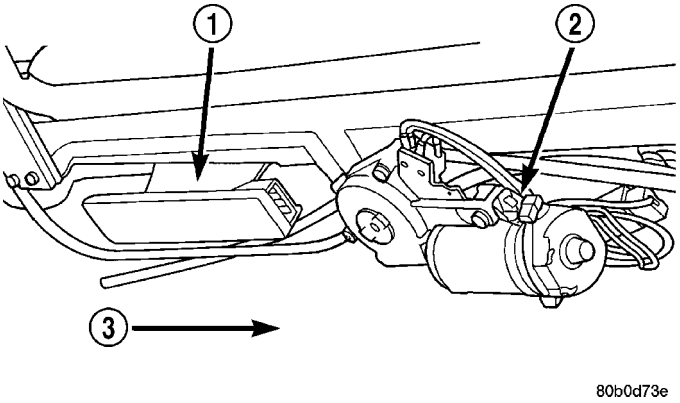

Fig. 16 Sunroof Express Module & Drive Motor

1 - SUN ROOF EXPRESS MODULE
2 - DRIVE MOTOR
3 - TO REMOVE SLIDE

INSTALLATION

(1) Place express module in the keyway located in sunroof module and slide module outward to lock it into position.

(2) Set headliner into position.

(3) Connect drive motor, express module, and control switch wire connectors.

(4) Test sunroof operation, adjust as necessary.

(5) Finish installing headliner.

(6) Install sunroof opening trim lace. (Refer to 23 - BODY/SUNROOF/OPENING TRIM LACE - INSTALLATION).

(7) Install A-pillar trim, sun visors, and map lamps/mini console.

WEATHERSTRIP/SEALS

TABLE OF CONTENTS

page

A-PILLAR SEAL
REMOVAL 134
INSTALLATION 134
A-PILLAR WEATHERSTRIP RETAINER AND MOLDING
REMOVAL 135
INSTALLATION 135
DECKLID OPENING WEATHERSTRIP
REMOVAL 135
INSTALLATION 135
DOOR INNER BELT WEATHERSTRIP
REMOVAL 136
INSTALLATION 136
DOOR OPENING TRIM WELT
REMOVAL 136
INSTALLATION 136
DRIP RAIL WEATHERSTRIP
REMOVAL 136
INSTALLATION 137
FRONT & REAR DOOR OPENING WEATHERSTRIP
REMOVAL 137
INSTALLATION 137
FRONT DOOR GLASS RUN WEATHERSTRIP
REMOVAL 137
INSTALLATION 138
FRONT DOOR INNER BELT WEATHERSTRIP
REMOVAL 138
INSTALLATION 138
FRONT DOOR OUTER BELT MOLDING
REMOVAL 138
INSTALLATION 138
HEADER / A-PILLAR WEATHERSTRIP
REMOVAL 139
INSTALLATION 139
HEADER WEATHERSTRIP RETAINER/MOLING
REMOVAL 140
INSTALLATION 140
OUTER DOOR BELT WEATHERSTRIP
REMOVAL 140
INSTALLATION 140
QUARTER PANEL WEATHERSTRIP
REMOVAL 140
INSTALLATION 141
QUARTER PANEL OUTER BELT WEATHERSTRIP/MOLDING
REMOVAL 141
INSTALLATION 141
REAR DOOR B-PILLAR DOOR SEAL
REMOVAL 141
INSTALLATION 141
REAR DOOR GLASS RUN WEATHERSTRIP
REMOVAL 141
INSTALLATION 141
REAR DOOR INNER BELT WEATHERSTRIP
REMOVAL 142
INSTALLATION 142
REAR DOOR OUTER BELT MOLDING
REMOVAL 142
INSTALLATION 142
SECONDARY SILL WEATHERSTRIP
REMOVAL 143
INSTALLATION 143
SIDE RAIL WEATHERSTRIP
REMOVAL 143
INSTALLATION 144

A-PILLAR SEAL

REMOVAL

(1) Open front door.

(2) Using a fork-type tool (C-4829), disengage push-in fasteners attaching A-pillar seal to A-pillar.

(3) Remove A-pillar seal from vehicle.

INSTALLATION

(1) Place A-pillar seal into position.

(2) Install push-in fasteners attaching A-pillar seal to A-pillar.

(3) Close front door.

A-PILLAR WEATHERSTRIP RETAINER AND MOLDING

REMOVAL

(1) Partially raise convertible top.

(2) Remove header and A-pillar weatherstrip as necessary to gain access.

(3) Remove screws holding A-pillar weatherstrip retainer to A-pillar (Fig. 1).

(4) Remove retainer from vehicle.

(5) Remove screws attaching A-pillar molding to A-pillar.

(6) Remove A-pillar molding from vehicle.

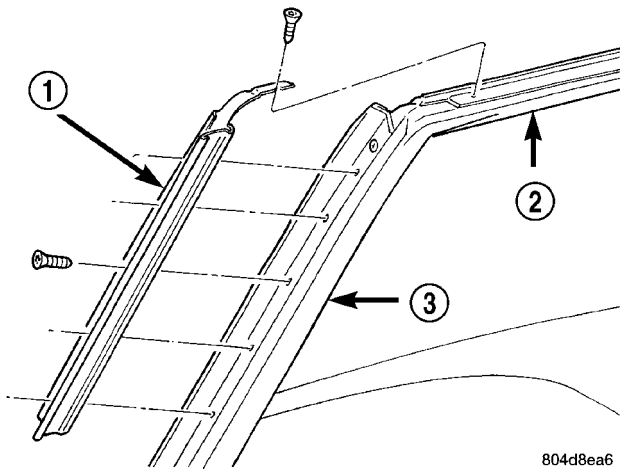

Fig. 1 A-Pillar Weatherstrip Retainer

1 - A-PILLAR WEATHERSTRIP RETAINER
2 - HEADER
3 - A-PILLAR

INSTALLATION

(1) Clean A-pillar of any seal material residue.

(2) Position A-pillar molding to vehicle.

(3) Install screws attaching A-pillar molding to A-pillar.

(4) Position A-pillar weatherstrip retainer on A-pillar.

(5) Install screws attaching retainer to A-pillar. Install middle screw first and then work outward.

(6) Install header and A-pillar weatherstrip.

(7) Lower and secure convertible top.

DECKLID OPENING WEATHERSTRIP

REMOVAL

(1) Release decklid latch and open decklid.

(2) Disconnect and isolate the battery negative cable.

(3) Remove four push pins and remove the latch cover.

(4) Disconnect the three harness electrical connectors and remove the ground strap screw.

(5) Tape the wires together and tape in one chase wire.

(6) Route the wires through the decklid.

(7) Pull decklid opening weatherstrip from decklid opening flange (Fig. 2).

(8) Remove decklid opening weatherstrip from vehicle.

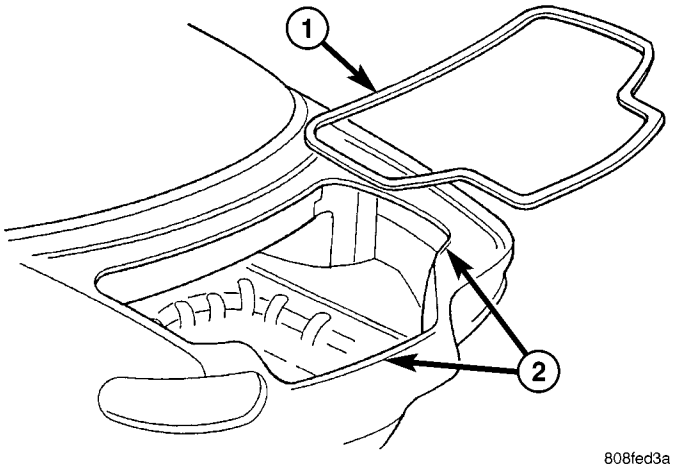

Fig. 2 DECKLID OPENING WEATHERSTRIP

1 - TRUNK OPENING WEATHERSTRIP
2 - TRUNK OPENING FLANGE

INSTALLATION

(1) Position decklid opening weatherstrip on vehicle (Fig. 2).

(2) Starting at center weatherstrip over decklid latch striker and press weatherstrip firmly onto decklid opening flange. Ensure that the weatherstrip seats properly along the entire length.

(3) Route the wire harness through the decklid and remove the tape and chase wire.

(4) Connect the three harness connectors and install the ground strap screw.

(5) Install the latch cover and install the four push pins.

(6) Connect the battery negative cable.

(7) Verify decklid operation and sealing.

DOOR INNER BELT WEATHERSTRIP

REMOVAL

(1) Remove door trim panel.

(2) Pull upward on rear edge of inner belt weatherstrip (Fig. 3).

(3) Remove weatherstrip from vehicle.

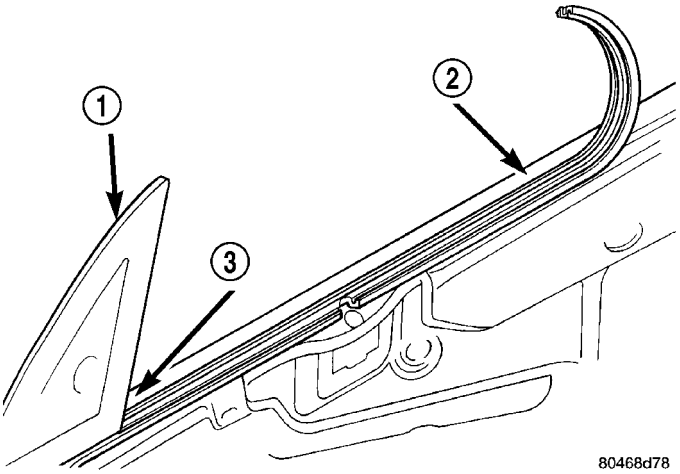

Fig. 3 Door Inner Belt Weatherstrip

1 - MIRROR FLAG/GLASS CHANNEL
2 - INNER BELT WEATHERSTRIP
3 - START THIS END FIRST

INSTALLATION

(1) Start leading edge of weatherstrip on vehicle.

(2) Press the leading edge of the weatherstrip forward until edge is tight to the mirror flag.

(3) Press weatherstrip into position on door panel.

(4) Install door trim panel.

DOOR OPENING TRIM WELT

REMOVAL

(1) Using trim stick, special tool C-4755, remove one end of door opening trim welt from door opening flange.

(2) Remove welt from vehicle (Fig. 4).

INSTALLATION

(1) Position door opening trim welt on vehicle.

(2) Butt end of welt to edge of header/A–pillar weatherstrip.

(3) Push door opening welt onto door opening flange.

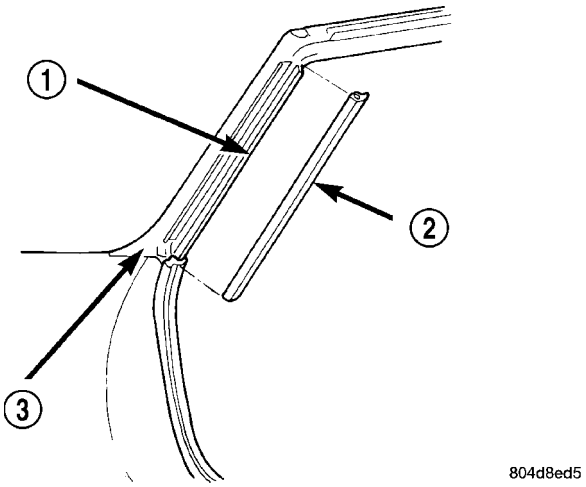

Fig. 4 Door Opening Trim Welt

1 - DOOR OPENING FLANGE
2 - DOOR OPENING TRIM WELT
3 - HEADER A-PILLAR WEATHERSTRIP

DRIP RAIL WEATHERSTRIP

REMOVAL

(1) Open front and rear doors.

(2) Remove two screws (Fig. 5).

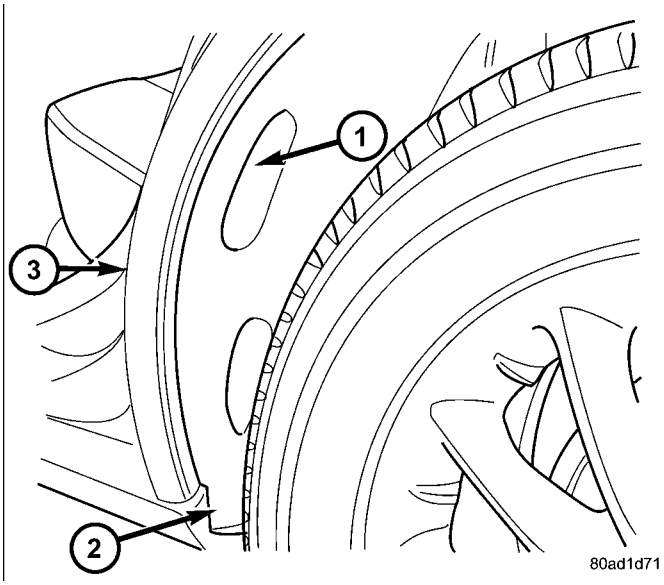

Fig. 5 Splash Shield

1 - FASTENERS
2 - SPALSH SHIELD
3 - DRIP RAIL WEATHERSTRIP

DRIP RAIL WEATHERSTRIP (Continued)

(3) Position splash shield out of way.

(4) Starting at the bottom of the A-pillar, pull the drip rail weatherstrip from the windshield side molding.

(5) Pull the drip rail weatherstrip from the roof rail pinch flange above door openings.

(6) Remove drip rail weatherstrip from vehicle (Fig. 6).

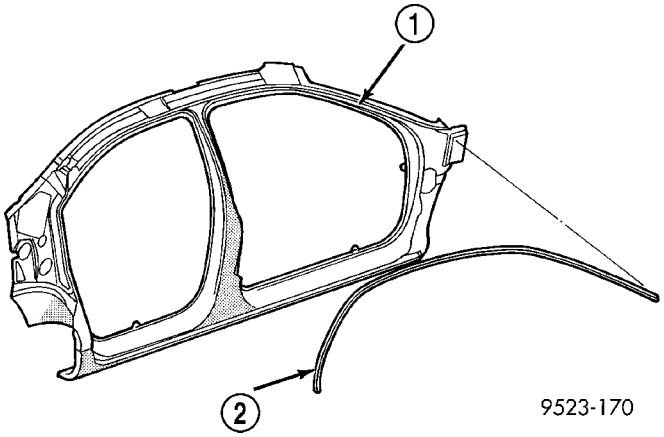

Fig. 6 Drip Rail Weatherstrip

1 - DRIP RAIL
2 - DRIP RAIL WEATHERSTRIP

INSTALLATION

(1) Place drip rail weatherstrip into position.

(2) Push drip rail weatherstrip on to the roof rail pinch flange above door openings.

(3) Starting at the bottom of the A-pillar, push the drip rail weatherstrip on to the windshield side molding.

(4) Position splash shield.

(5) Install two screws.

(6) Close front and rear doors.

FRONT & REAR DOOR OPENING WEATHERSTRIP

REMOVAL

(1) Open door.

(2) Remove door sill plate.

(3) Pull weatherstrip from pinch flange around door opening (Fig. 7).

INSTALLATION

Position the splice in the door opening weatherstrip in the center of the bottom of the opening and reverse the preceding operation.

(1) Push weatherstrip on to pinch flange around door opening.

(2) Install door sill plate.

(3) Close door.

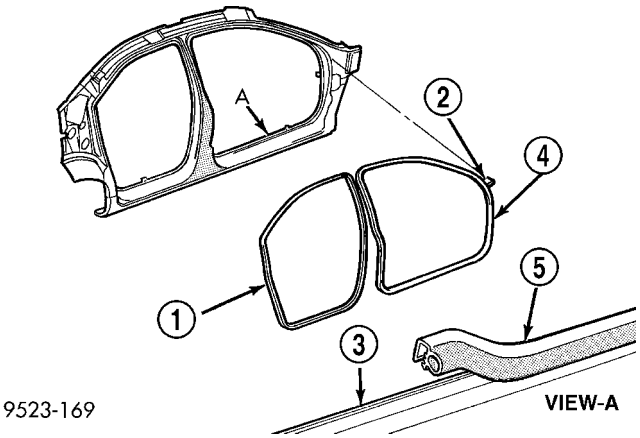

Fig. 7 Door Opening Weatherstrips

1 - REAR DOOR WEATHERSTRIP
2 - A-PILLAR SEAL
3 - PINCH FLANGE
4 - FRONT DOOR WEATHERSTRIP
5 - WEATHERSTRIP

FRONT DOOR GLASS RUN WEATHERSTRIP

REMOVAL

(1) Remove door glass. (Refer to 23 - BODY/DOOR - FRONT/DOOR GLASS - REMOVAL)

(2) Remove bolt attaching bottom of front lower run channel to inner door panel.

(3) Pull glass run weatherstrip from door glass opening frame.

(4) Remove lower run channel through opening at top of door (Fig. 8).

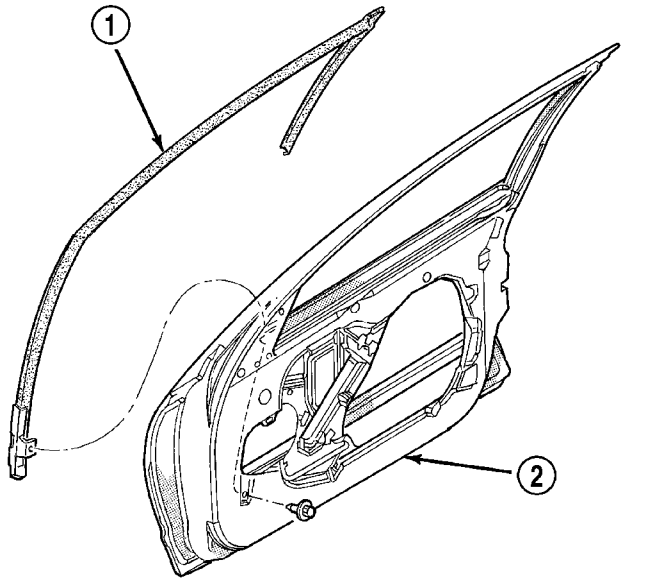

Fig. 8 Door Glass Run Weatherstrip

1 - GLASS RUN WEATHERSTRIP
2 - FRONT DOOR

FRONT DOOR GLASS RUN WEATHERSTRIP (Continued)

INSTALLATION

(1) Install lower run channel through opening at top of door.

(2) Push glass run weatherstrip to door glass opening frame.

(3) Install bolt attaching bottom of front lower run channel to inner door panel.

(4) Install door glass. (Refer to 23 - BODY/DOOR - FRONT/DOOR GLASS - INSTALLATION)

FRONT DOOR INNER BELT WEATHERSTRIP

REMOVAL

(1) Remove front door trim panel. (Refer to 23 - BODY/DOOR - FRONT/TRIM PANEL - REMOVAL)

(2) Pull upward at rear end of inner belt weatherstrip.

(3) Remove inner belt weatherstrip from vehicle (Fig. 9).

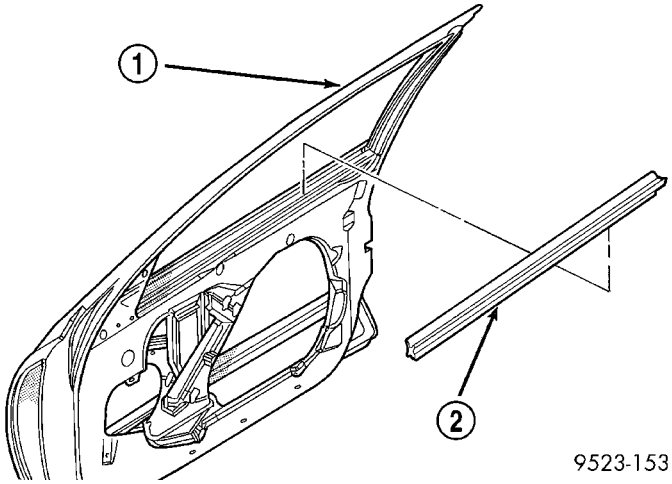

Fig. 9 Front Door Inner Belt Weatherstrip

1 - FRONT DOOR
2 - INNER BELT WEATHERSTRIP

INSTALLATION

(1) Place inner belt weatherstrip into position.

(2) Start weatherstrip at the front and rear edge door. Press downward on the inner belt weatherstrip till it is fully seated.

(3) Install front door trim panel. (Refer to 23 - BODY/DOOR - FRONT/TRIM PANEL - INSTALLATION)

FRONT DOOR OUTER BELT MOLDING

REMOVAL

(1) Remove screw attaching rearward end of molding to front door (Fig. 10).

(2) Using a rubber mallet and block of wood, tap upward at each clip attaching belt molding to door (Fig. 11).

(3) Lift up on the rear of the belt molding and pull rearward to remove.

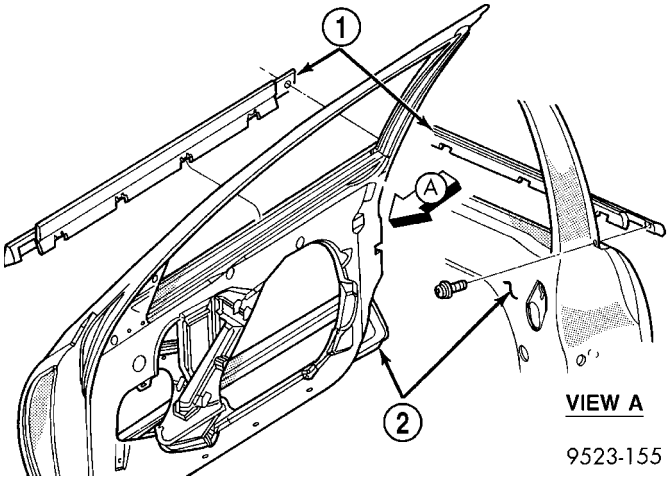

Fig. 10 Front Door Outer Belt Molding

1 - OUTSIDE BELT MOLDING
2 - FRONT DOOR

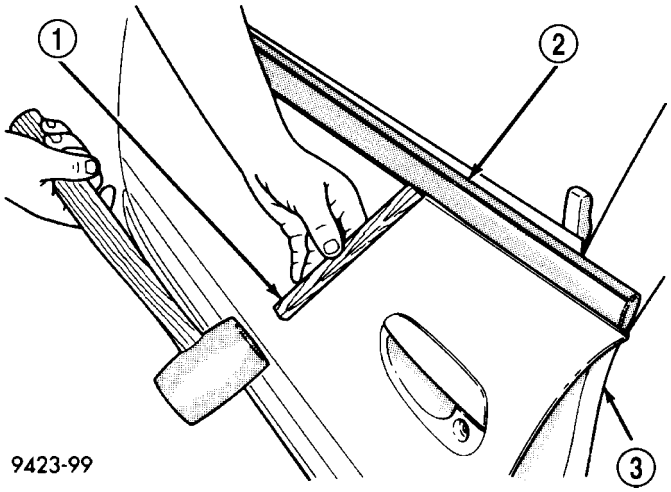

Fig. 11 Front Door Outer Belt Molding Removal

1 - WOOD BLOCK
2 - BELT MOLDING
3 - DOOR

INSTALLATION

(1) Place belt molding in position.

(2) Using your hand press downward at each clip attaching belt molding to door till in position.

(3) Install screw attaching rearward end of molding to front door.

HEADER / A-PILLAR WEATHERSTRIP

REMOVAL

(1) Partially raise convertible top.
(2) Remove inside rear view mirror.
(3) Remove sun visors.
(4) Remove header trim panel.
(5) Remove both door sill trim panels.
(6) Remove nuts holding header and A-pillar weatherstrip at upper corners of windshield (Fig. 12).
(7) Remove push in fasteners at lower corners of windshield holding weatherstrip to A-pillar.
(8) Remove header and A-pillar weatherstrip from vehicle.
(9) Clean any residual seal material from header panel.

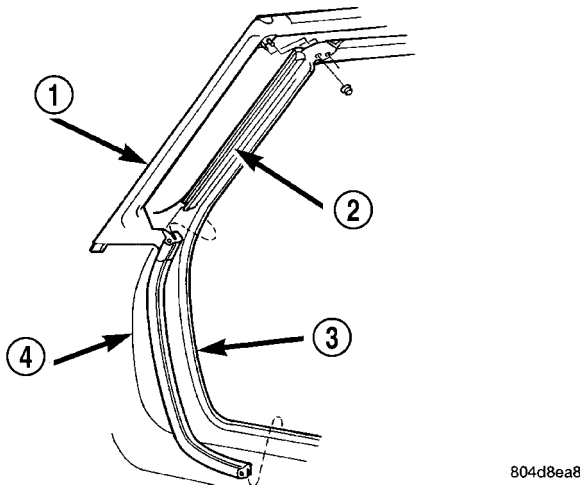

Fig. 12 Header/A-Pillar Weatherstrip

1 - HEADER/A-PILLAR WEATHERSTRIP
2 - A-PILLAR WEATHERSTRIP RETAINER
3 - DOOR OPENING FLANGE
4 - FENDER

INSTALLATION

CAUTION: Ensure that the butyl patch and butyl rope at each corner of the windshield is present and in good condition (Fig. 13). The butyl is critical for the water management system. Replace as necessary.

(1) Install new L foam starting at upper screw on A-pillar retainer.
(2) Install new L foam starting at upper screw on A-pillar retainer (Fig. 14).
(3) Position header and A-pillar weatherstrip on vehicle.
(4) Secure weatherstrip into retainers at header and A-pillar.
(5) Install nuts at upper corners of windshield.
(6) Install push in fasteners at lower corners of windshield.
(7) Install door sill trim panels.
(8) Install header trim panel.
(9) Install sun visors.
(10) Install inside rear view mirror.
(11) Lower and secure convertible top.

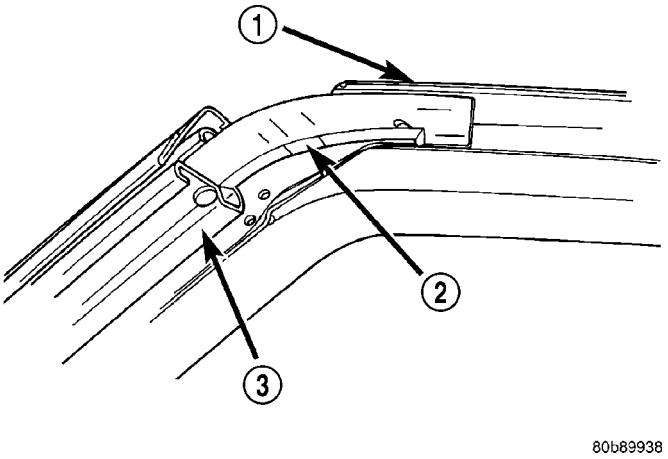

Fig. 13 Butyl Patch and L – FOAM

1 - HEADER WEATHERSTRIP RETAINER
2 - L-SHAPE FOAM ROPE
3 - A-PILLAR WEATHERSTRIP RETAINER

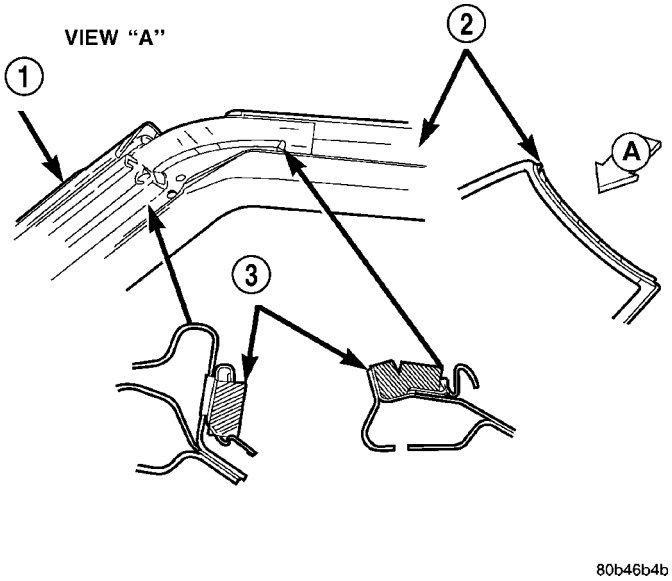

Fig. 14 L Shape Foam Location

1 - A-PILLAR
2 - HEADER
3 - L SHAPE FOAM

HEADER WEATHERSTRIP RETAINER/MOLING

REMOVAL

(1) Partially raise convertible top.

(2) Remove header and A-pillar weatherstrip as necessary to gain access.

(3) Remove screws attaching A-pillar weatherstrip retainer to header weatherstrip retainer.

(4) Remove screws attaching header weatherstrip retainer to header panel (Fig. 15).

(5) Remove retainer from vehicle.

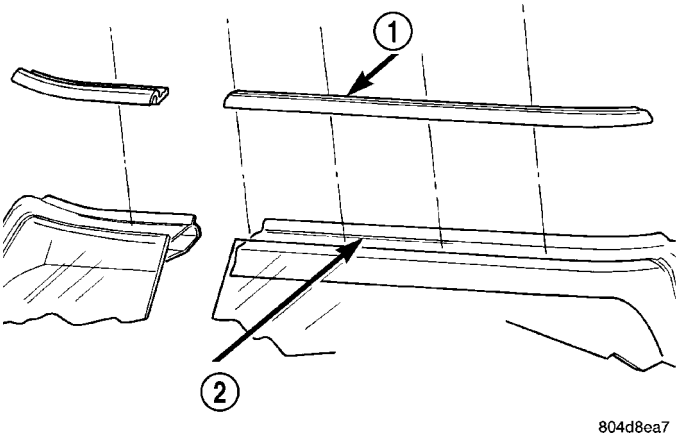

Fig. 15 Header Weatherstrip Retainer

1 - HEADER WEATHERSTRIP RETAINER
2 - HEADER

INSTALLATION

(1) Clean any residual seal material from header panel.

(2) Position header weatherstrip retainer on vehicle.

(3) Install screws attaching retainer to header panel. Install center screw first and then work outward.

(4) Install screws attaching A-pillar weatherstrip retainer to header retainer.

(5) Install L foam in upper corner starting at upper screw on the A-pillar retainer.

(6) Install L foam in upper corner starting at upper screw on A-pillar.

(7) Install header and A-pillar weatherstrip.

(8) Lower and secure convertible top.

OUTER DOOR BELT WEATHERSTRIP

REMOVAL

(1) Remove door glass.

(2) Remove screws attaching outer belt weatherstrip to outer door panel (Fig. 16).

(3) Remove outer belt weatherstrip from the vehicle.

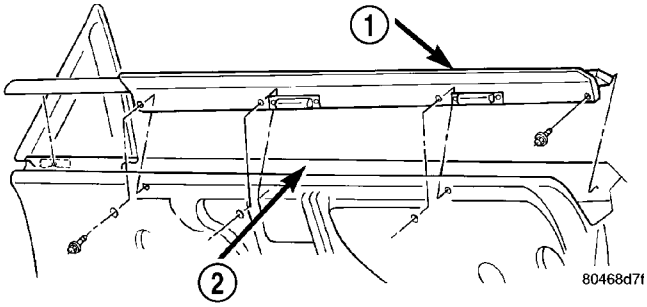

Fig. 16 Door Outer Belt Weatherstrip

1 - DOOR OUTER BELT WEATHERSTRIP
2 - OUTER DOOR PANEL

INSTALLATION

(1) Position outer belt weatherstrip on vehicle.

(2) Install screws to hold outer weatherstrip to outer door panel.

(3) Install door glass.

QUARTER PANEL WEATHERSTRIP

REMOVAL

(1) Remove door sill trim panel.

(2) Remove push in fasteners holding weatherstrip to B-pillar.

(3) Remove weatherstrip from door opening flange.

(4) Remove quarter panel weatherstrip from vehicle (Fig. 17).

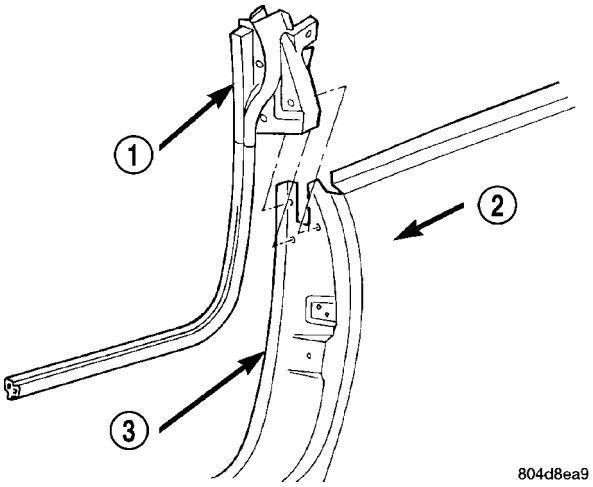

Fig. 17 Quarter Panel Weatherstrip

1 - QUARTER PANEL WEATHERSTRIP
2 - QUARTER PANEL
3 - DOOR OPENING FLANGE

QUARTER PANEL WEATHERSTRIP (Continued)

INSTALLATION

(1) Position panel weatherstrip onto vehicle.
(2) Install weatherstrip to door opening flange.
(3) Install push in fasteners attaching weatherstrip to B-pillar.
(4) Install door sill trim panel.

QUARTER PANEL OUTER BELT WEATHERSTRIP/MOLDING

REMOVAL

(1) Lower convertible top to midway position.
(2) Lower quarter glass to full down position.
(3) Remove quarter trim panel.
(4) Remove screws attaching quarter panel outer belt weatherstrip/molding to outer quarter panel.
(5) Loosen appropriate side of upper deck molding.
(6) Pull upward at one end of outer belt weatherstrip to separate from vehicle.
(7) Remove outer belt weatherstrip from vehicle.

INSTALLATION

(1) Position quarter panel outer belt weatherstrip/molding on vehicle.
(2) Push outer belt weatherstrip/molding downward until weatherstrip/molding is fully seated.
(3) Install screws attaching outer belt weatherstrip to outer quarter panel.
(4) Tighten fasteners for upper belt molding.
(5) Install quarter trim panel.
(6) Raise and secure convertible top.

REAR DOOR B-PILLAR DOOR SEAL

REMOVAL

(1) Using a suitable heat gun, warm seal to approximately 100° F to ease adhesive separation.
(2) Peel B-pillar seal from upper door frame, top to bottom (Fig. 18).
(3) Clean adhesive residue from door frame.

INSTALLATION

(1) If original seal is reused, clean adhesive residue from back of seal.
(2) Apply body side molding tape to back of seal.
(3) Peel protective paper from back of tape.
(4) Place cutout in seal around screw head at bottom of seal location.
(5) Align seal to edge of door frame.
(6) Press adhesive onto door frame.

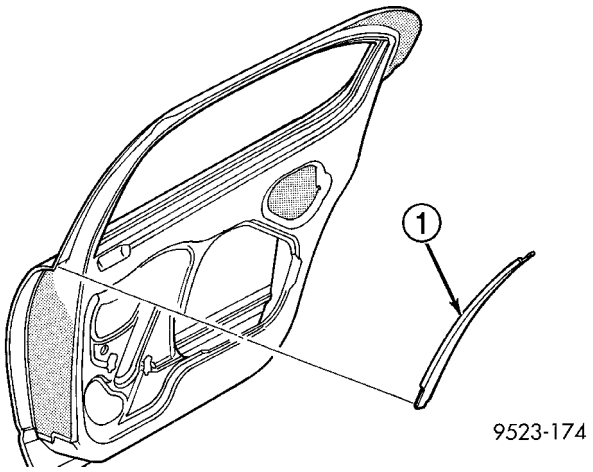

Fig. 18 Rear Door B-Pillar Seal

1 - B-PILLAR SEAL

REAR DOOR GLASS RUN WEATHERSTRIP

REMOVAL

(1) Remove door glass. (Refer to 23 - BODY/DOORS - REAR/DOOR GLASS - REMOVAL)
(2) Pull glass run weatherstrip from door glass opening frame (Fig. 19).

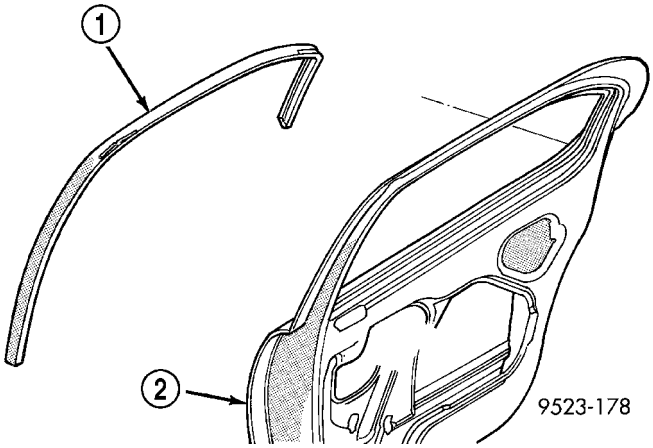

Fig. 19 Door Glass Run Weatherstrip

1 - GLASS RUN WEATHERSTRIP
2 - REAR DOOR

INSTALLATION

(1) Install glass run weatherstrip to door glass opening frame.
(2) Install door glass. (Refer to 23 - BODY/DOORS - REAR/DOOR GLASS - INSTALLATION)

REAR DOOR INNER BELT WEATHERSTRIP

REMOVAL

(1) Remove rear door trim panel. (Refer to 23 - BODY/DOORS - REAR/TRIM PANEL - REMOVAL)

(2) Pull upward at front end of inner belt weatherstrip.

(3) Remove inner belt weatherstrip from vehicle (Fig. 20).

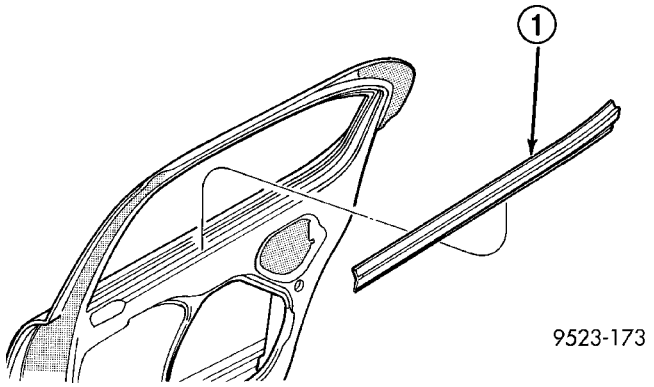

Fig. 20 Rear Door Inner Belt Weatherstrip

1 - INNER BELT WEATHERSTRIP

INSTALLATION

(1) Place inner belt weatherstrip into position.

(2) Push downward on the inner belt weatherstrip.

(3) Install rear door trim panel. (Refer to 23 - BODY/DOORS - REAR/TRIM PANEL - INSTALLATION)

REAR DOOR OUTER BELT MOLDING

REMOVAL

(1) Remove screw attaching forward end of molding to rear door (Fig. 21).

(2) Disengage clips attaching rearward end of belt molding to rear door.

(3) Using a rubber mallet and block of wood, tap upward at each clip attaching belt molding to door (Fig. 22).

(4) Remove belt molding from door.

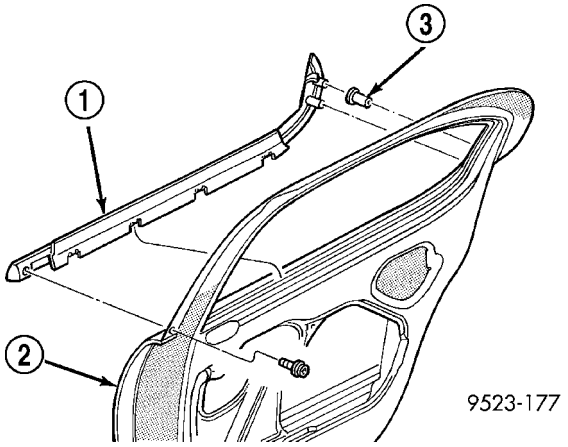

Fig. 21 Rear Door Outer Belt Molding

1 - OUTSIDE BELT MOLDING
2 - REAR DOOR
3 - BARREL CLIP

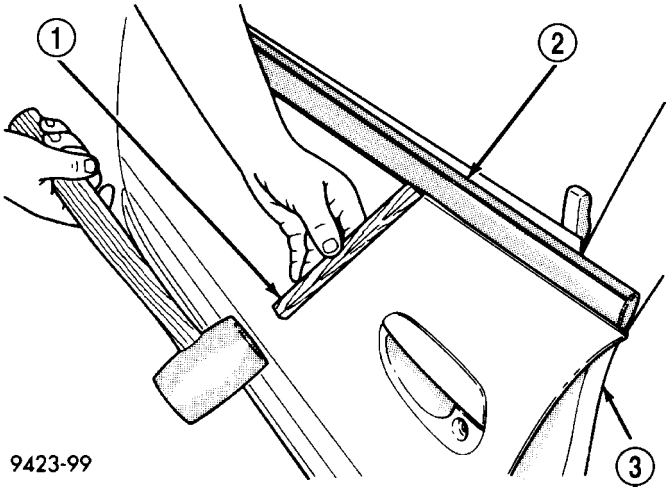

Fig. 22 Outer Belt Molding Removal

1 - WOOD BLOCK
2 - BELT MOLDING
3 - DOOR

INSTALLATION

(1) Place belt molding into position.

(2) Push or tap downward at each clip attaching belt molding to door.

(3) Engage clips attaching rearward end of belt molding to rear door.

(4) Install screw attaching forward end of molding to rear door.

SECONDARY SILL WEATHERSTRIP

REMOVAL

(1) Open door.

(2) Using fork tool C-4829, disengage push in fasteners attaching secondary sill weatherstrip to bottom of door.

(3) Remove secondary sill weatherstrip from vehicle (Fig. 23).

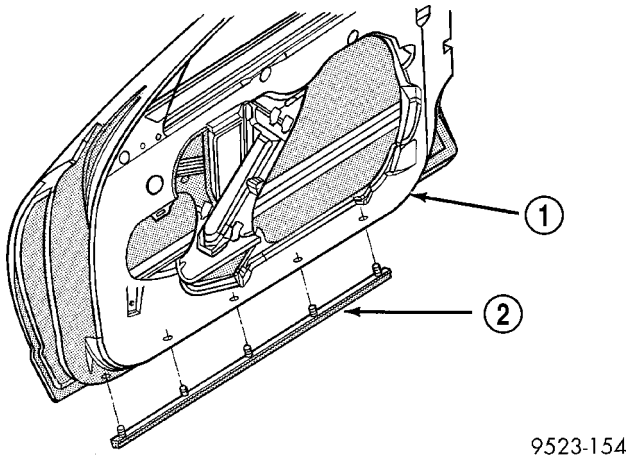

Fig. 23 Secondary Sill Weatherstrip – Typical

1 - DOOR
2 - SECONDARY SILL WEATHERSTRIP

INSTALLATION

(1) Place secondary sill weatherstrip into position.

(2) Install push in fasteners attaching secondary sill weatherstrip to bottom of door.

(3) Close door.

SIDE RAIL WEATHERSTRIP

REMOVAL

FRONT

(1) Partially raise convertible top.

(2) Remove push in fasteners attaching weatherstrip to retainer.

(3) Remove weatherstrip from vehicle (Fig. 24).

CENTER

(1) Partially raise convertible top.

(2) Remove push in fasteners attaching weatherstrip to retainer.

(3) Remove weatherstrip from vehicle (Fig. 25).

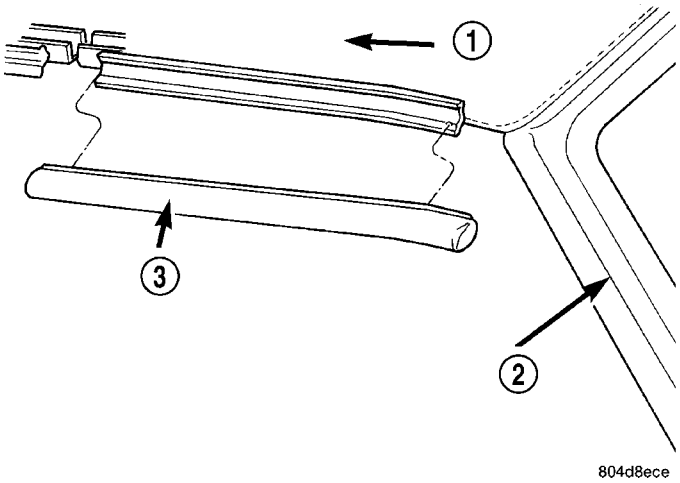

Fig. 24 Front Side Rail Weatherstrip

1 - CONVERTIBLE TOP
2 - A-PILLAR
3 - FRONT SIDE RAIL WEATHERSTRIP

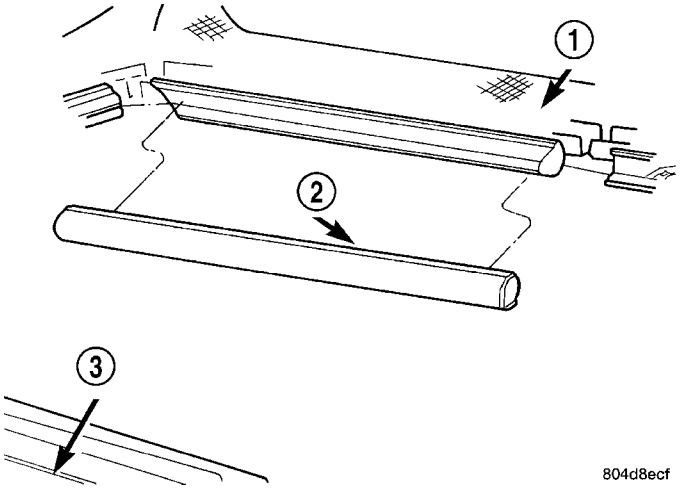

Fig. 25 Center Side Rail Weatherstrip

1 - CONVERTIBLE TOP
2 - CENTER SIDE RAIL WEATHERSTRIP
3 - QUARTER PANEL

SIDE RAIL WEATHERSTRIP (Continued)

REAR

(1) Partially raise convertible top.

(2) Remove push in fasteners attaching weatherstrip to retainer.

(3) Separate weatherstrip from vehicle (Fig. 26).

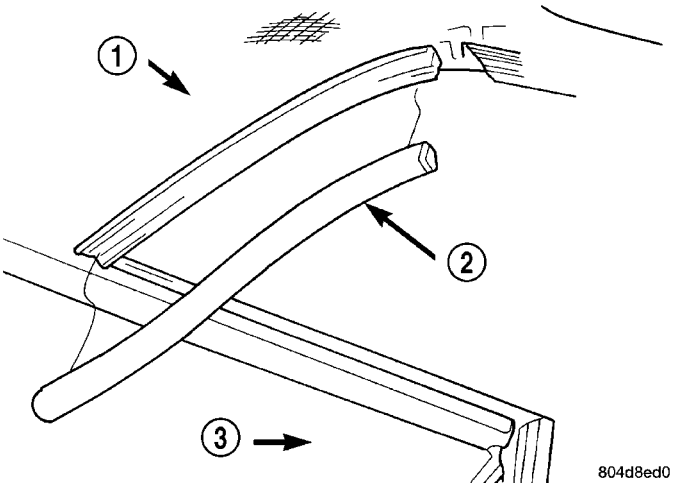

Fig. 26 Rear Side Rail

1 - CONVERTIBLE TOP
2 - REAR SIDE RAIL WEATHERSTRIP
3 - QUARTER PANEL

INSTALLATION

FRONT

(1) Position weatherstrip on vehicle.

(2) Install push in fasteners into retainer channel, aligning embossment on back side of weatherstrip to corner of retainer.

(3) Lower convertible top.

(4) Secure convertible top.

CENTER

(1) Position weatherstrip on vehicle.

(2) Install push in fasteners into retainer channel, aligning embossment on back side of weatherstrip to corner of retainer.

(3) Lower convertible top.

(4) Secure convertible top.

REAR

(1) Position weatherstrip on vehicle.

(2) Install push in fasteners into retainer channel, aligning embossment on back side of weatherstrip to corner of retainer.

(3) Push weatherstrip into retainer channel, aligning embossment on backside of weatherstrip to corner of retainer.

(4) Lower convertible top.

(5) Secure convertible top.

BODY STRUCTURE

TABLE OF CONTENTS

page

GAP AND FLUSH
SPECIFICATIONS - BODY GAP AND FLUSH MEASUREMENTS - JR-27 145
OPENING DIMENSIONS
SPECIFICATIONS
SPECIFICATIONS - BODY OPENING DIMENSION - JR-27 148
SPECIFICATIONS - BODY OPENING DIMENSIONS - JR-41 150
SEALER LOCATIONS
SPECIFICATIONS
SPECIFICATIONS - SEALER LOCATIONS - JR-27 AND JR-41 152
SPECIFICATIONS - SEALER LOCATIONS - JR-27 ONLY 156
SPECIFICATIONS - SEALER LOCATIONS - JR-41 ONLY 172

page

STRUCTURAL ADHESIVE LOCATIONS
SPECIFICATIONS
SPECIFICATIONS - STRUCTURAL ADHESIVE LOCATIONS - JR-27 188
SPECIFICATIONS - STRUCTURAL ADHESIVE LOCATIONS - JR-41 199
WELD LOCATIONS
SPECIFICATIONS
SPECIFICATIONS - WELD LOCATIONS - JR-27 AND JR-41 206
SPECIFICATIONS - WELD LOCATIONS - JR-27 ONLY 238
SPECIFICATIONS - WELD LOCATIONS - JR-41 ONLY 257

GAP AND FLUSH

SPECIFICATIONS - BODY GAP AND FLUSH MEASUREMENTS - JR-27

INDEX

DESCRIPTION	FIGURE
BODY GAP AND FLUSH	1

GAP AND FLUSH (Continued)

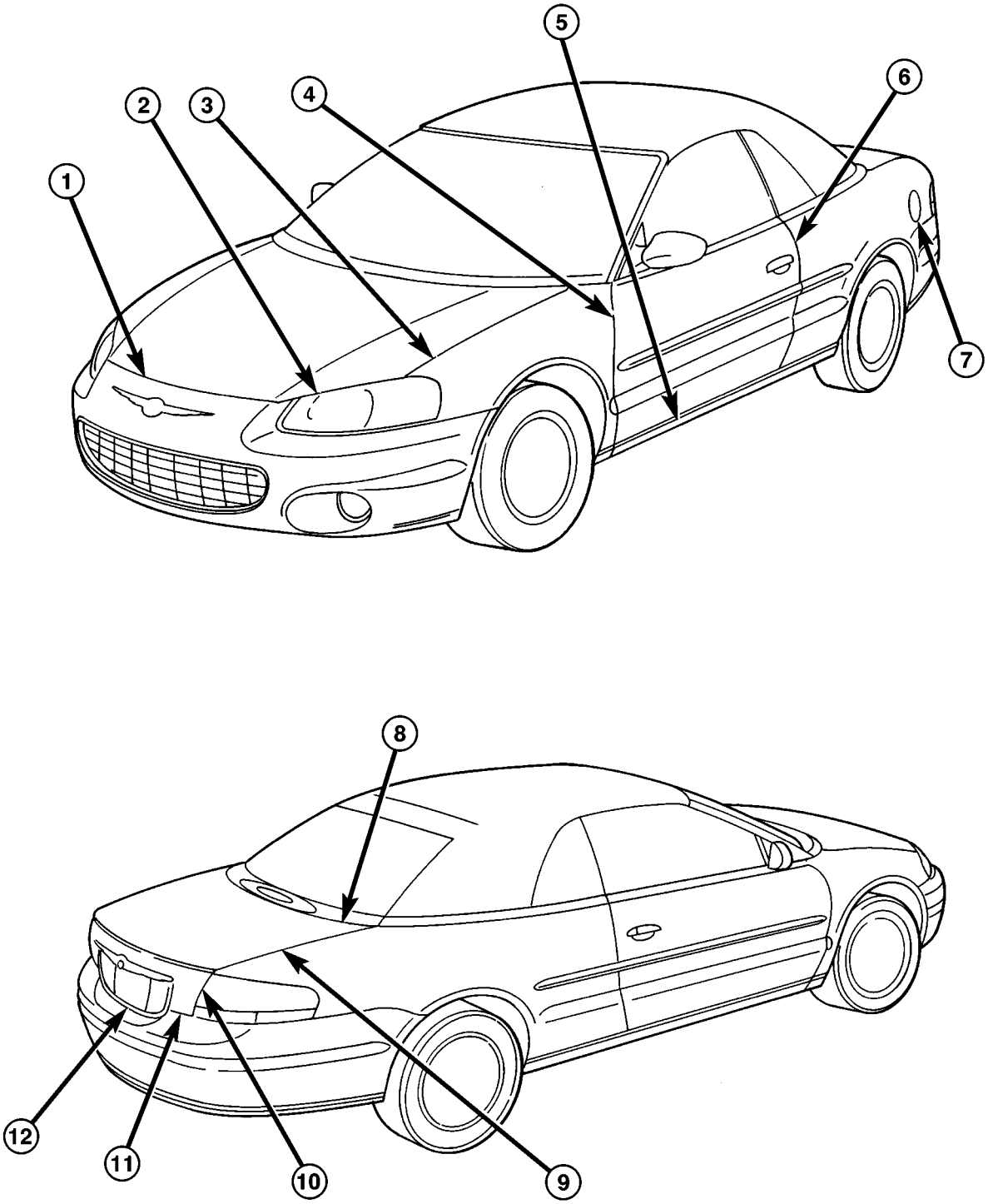

80c623e3

Fig. 1 BODY GAP AND FLUSH

GAP AND FLUSH (Continued)

	LOCATION	GAP	FLUSH
1	Fascia to Hood	6.0 Blending to 8.0 ± 2.5 Parallel within 2.5	1.6 Under Flush ± 2.5 Consistent within 2.5
2	Headlamp to Hood	8.0 ± 2.5 Parallel within 2.0	
3	Hood to Fender	4.0 ± 1.0 Parallel within 1.5	Flush ± 1.5 Consistent within 2.0
4	Fender to Door	5.0 ± 1.0 Parallel within 2.5	0.8 Over Flush ± 1.5 Consistent within 2.0
5	Doors to Body Side Sill	6.0 ± 1.5 Parallel within 2.0	6.0 Under Flush ± 1.5 Consistent within 2.5
6	Door to Quarter Panel	4.0 ± 1.0 Parallel within 1.5	Flush ± 1.5 Consistent within 2.0
7	Fuel Filter Door to Quarter Panel	3.0 ± 0.75 Uniform within 1.0	Flush ± 1.0
8	Deck Lid Molding to Deck Lid	4.5 ± 2.0 Parallel within 2.5	
9	Deck Lid to Quarter Panel	4.0 ± 1.0 Parallel within 1.0	Flush ± 1.5 Consistent within 1.5
10	Tail Lamp to Deck Lid	5.0 Blending to 5.5 ± 1.5 LH & RH to be within 2.0	
11	Fascia to Deck Lid	7.0 ± 2.0 Parallel Within 1.5	
12	Deck Lid Applique to Fascia	9.0 ± 2.0 Parallel within 2.0	
NOTE: ALL MEASUREMENTS ARE IN mm			

OPENING DIMENSIONS

SPECIFICATIONS

SPECIFICATIONS - BODY OPENING DIMENSION - JR-27

INDEX

DESCRIPTION	FIGURE
WINDSHIELD OPENING	2
TRUNK OPENING	3
DOOR OPENINGS	4

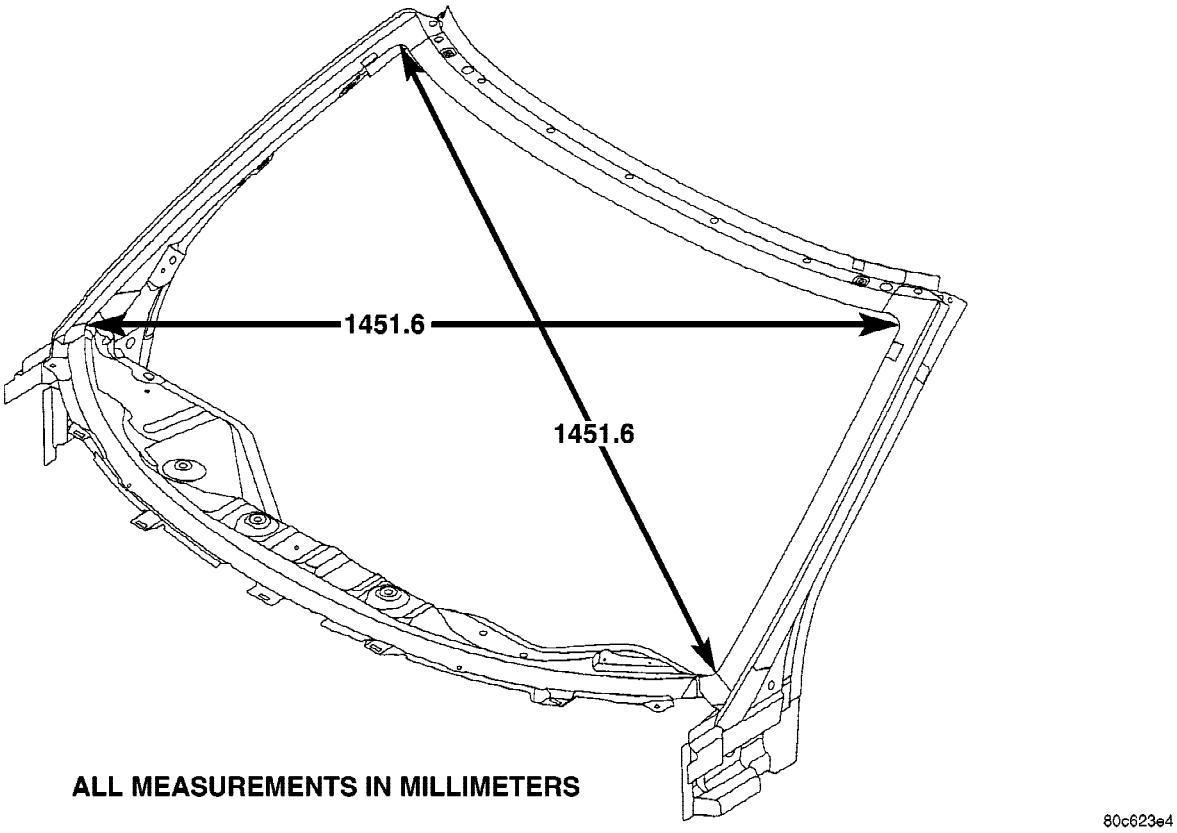

Fig. 2 WINDSHIELD OPENING

OPENING DIMENSIONS (Continued)

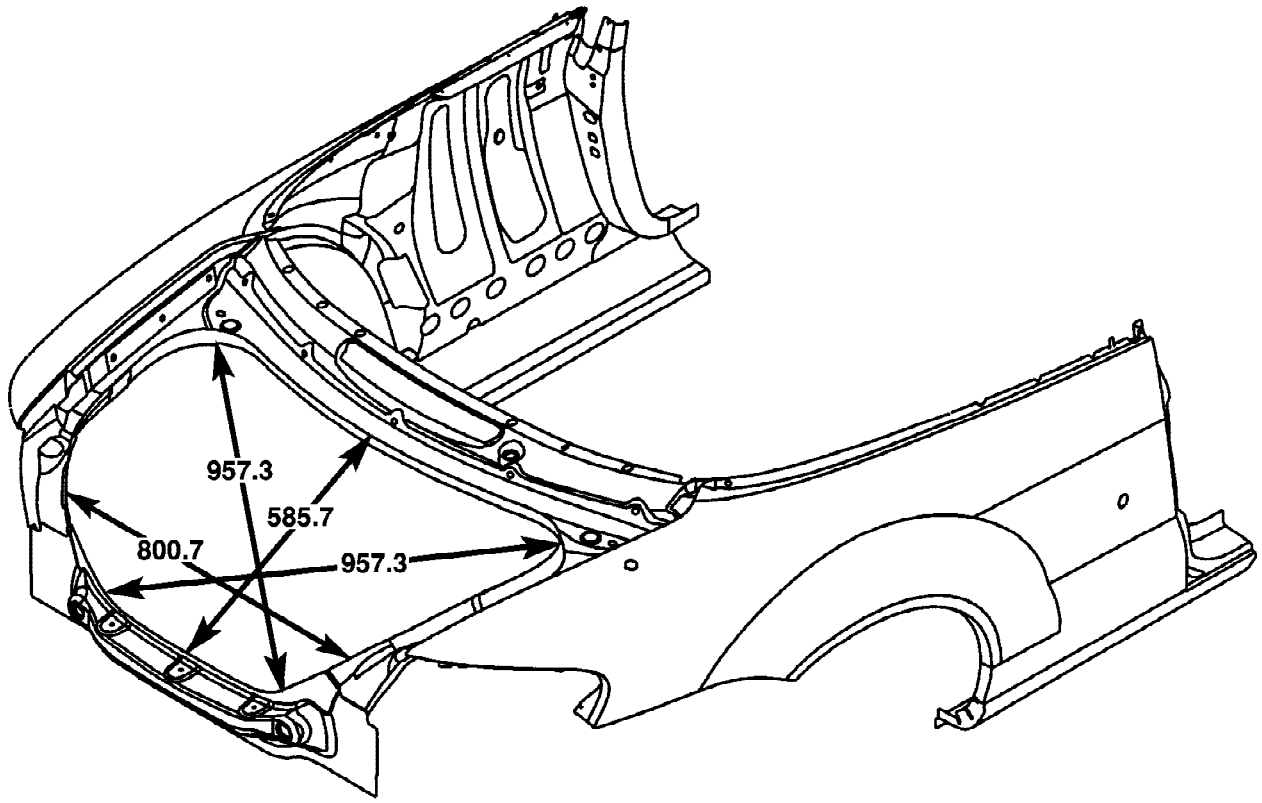

ALL MEASUREMENTS IN MILLIMETERS

80c623e5

Fig. 3 TRUNK OPENING

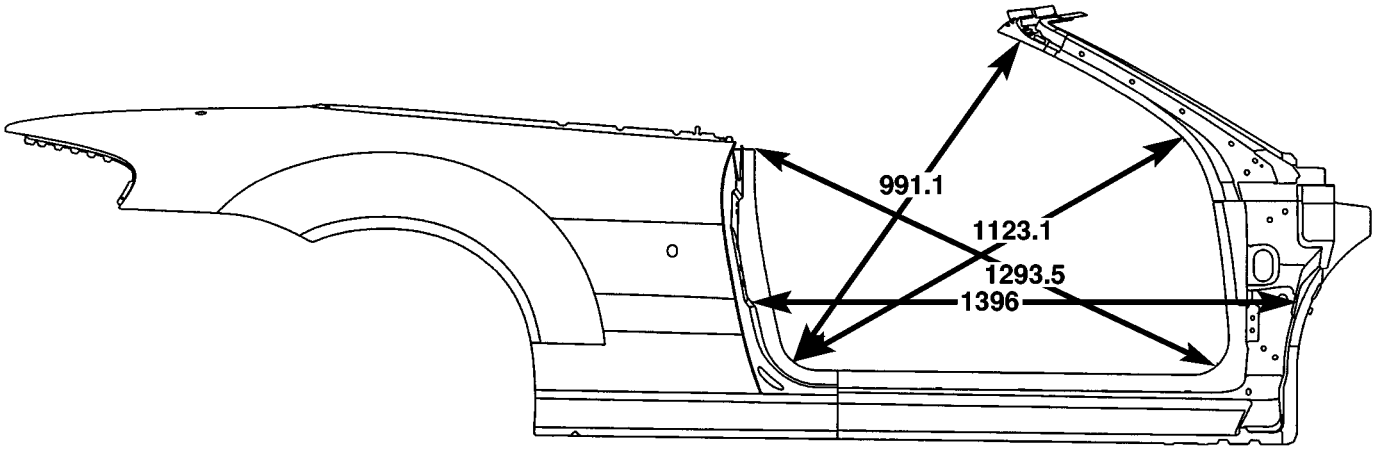

ALL MEASUREMENTS IN MILLIMETERS

80bf8386

Fig. 4 DOOR OPENING

OPENING DIMENSIONS (Continued)

SPECIFICATIONS - BODY OPENING DIMENSIONS - JR-41

INDEX

DESCRIPTION	FIGURE
WINDSHIELD OPENING	5
REAR WINDOW AND TRUNK OPENING	6
DOOR OPENINGS	7

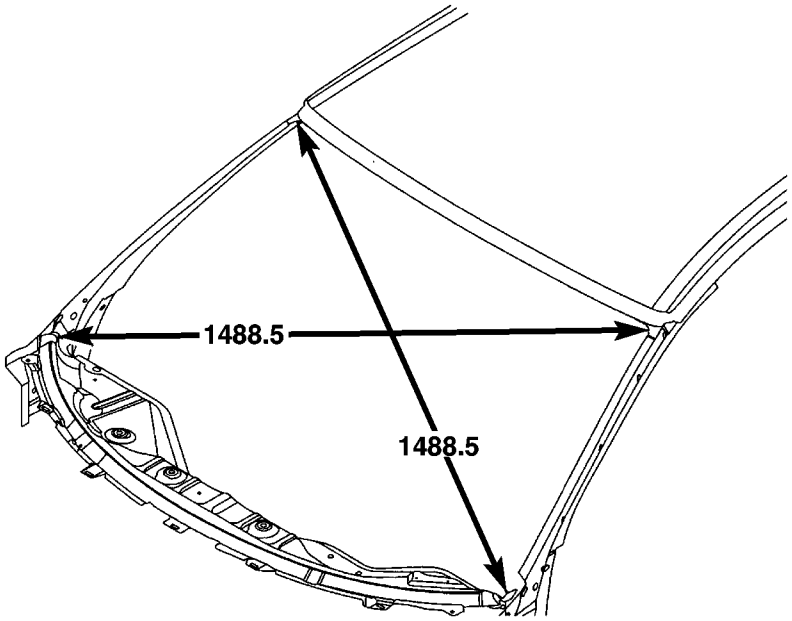

ALL MEASUREMENTS IN MILLIMETERS

80be62ce

Fig. 5 WINDSHIELD OPENING

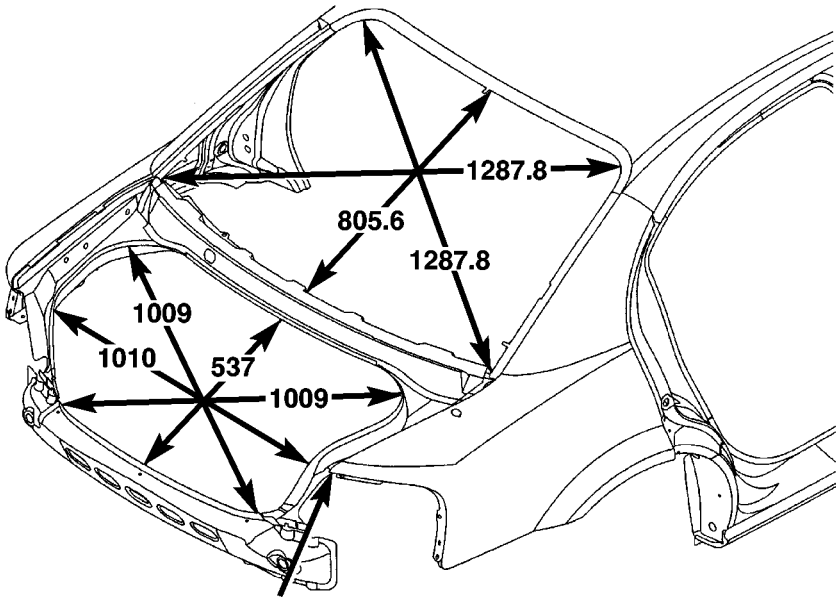

1168.80 B/S/A CORNER TO CORNER

ALL MEASUREMENTS IN MILLIMETERS

80be62d5

Fig. 6 REAR WINDOW AND TRUNK OPENING

OPENING DIMENSIONS (Continued)

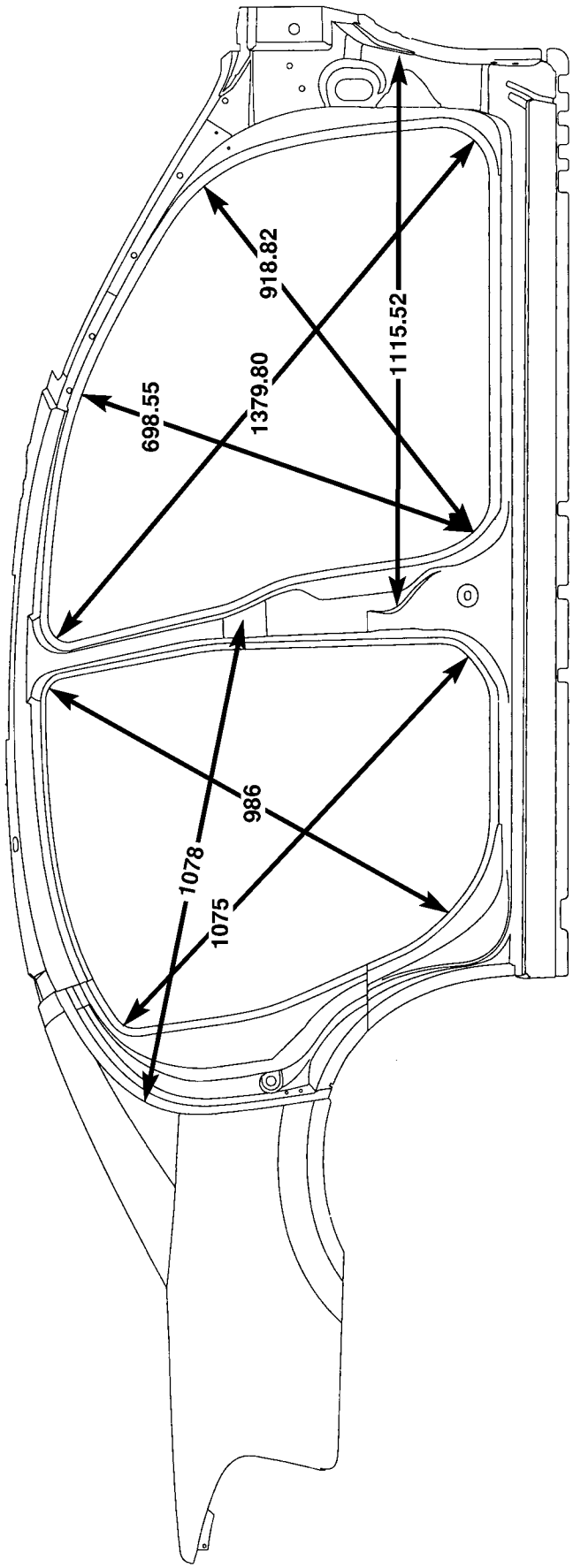

ALL MEASUREMENTS IN MILLIMETERS

Fig. 7 DOOR OPENINGS

SEALER LOCATIONS

SPECIFICATIONS

SPECIFICATIONS - SEALER LOCATIONS - JR-27 AND JR-41

INDEX

DESCRIPTION	FIGURE
HOOD HEM FLANGE	8
DASH PANEL TO LOWER COWL PLENUM PANEL	9
DASH PANEL TO FRONT FLOOR PAN	10
FRONT SUSPENSION UPPER MOUNTING	11
″A″ PILLAR TO UPPER COWL	12
DASH PANEL & LOWER COWL PLENUM	13
COWL PLENUM CLOSURE, LOWER COWL PLENUM & UPPER COWL PLENUM	14

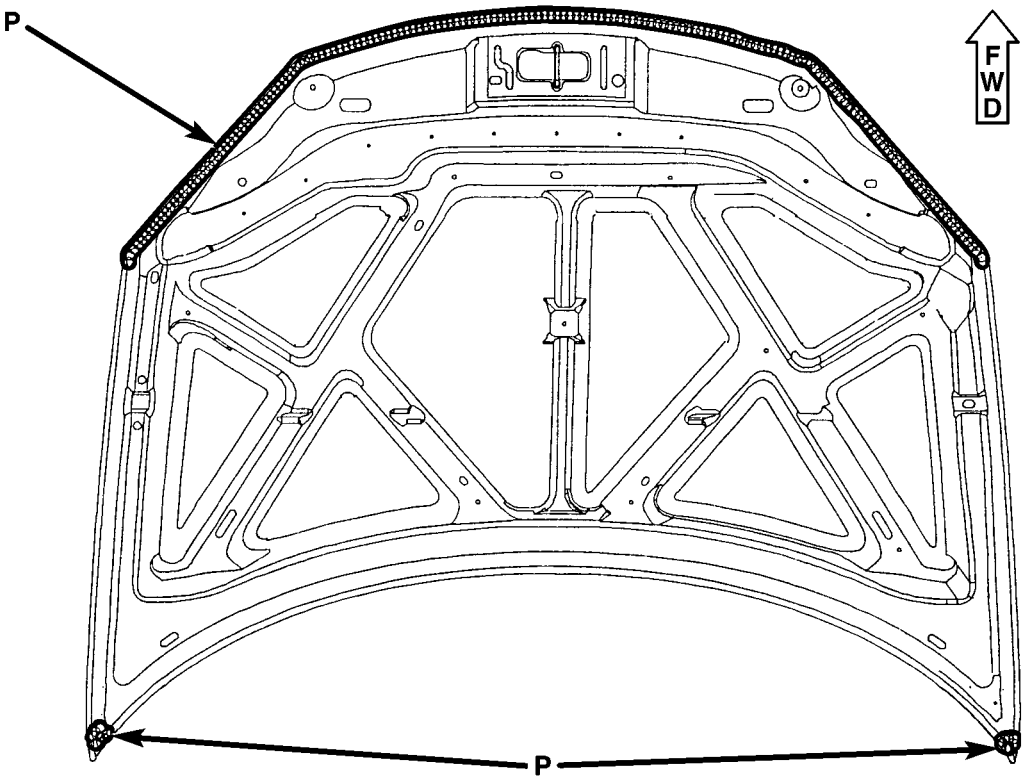

P = PUMPABLE SEALER

80c623a7

Fig. 8 HOOD HEM FLANGE

SEALER LOCATIONS (Continued)

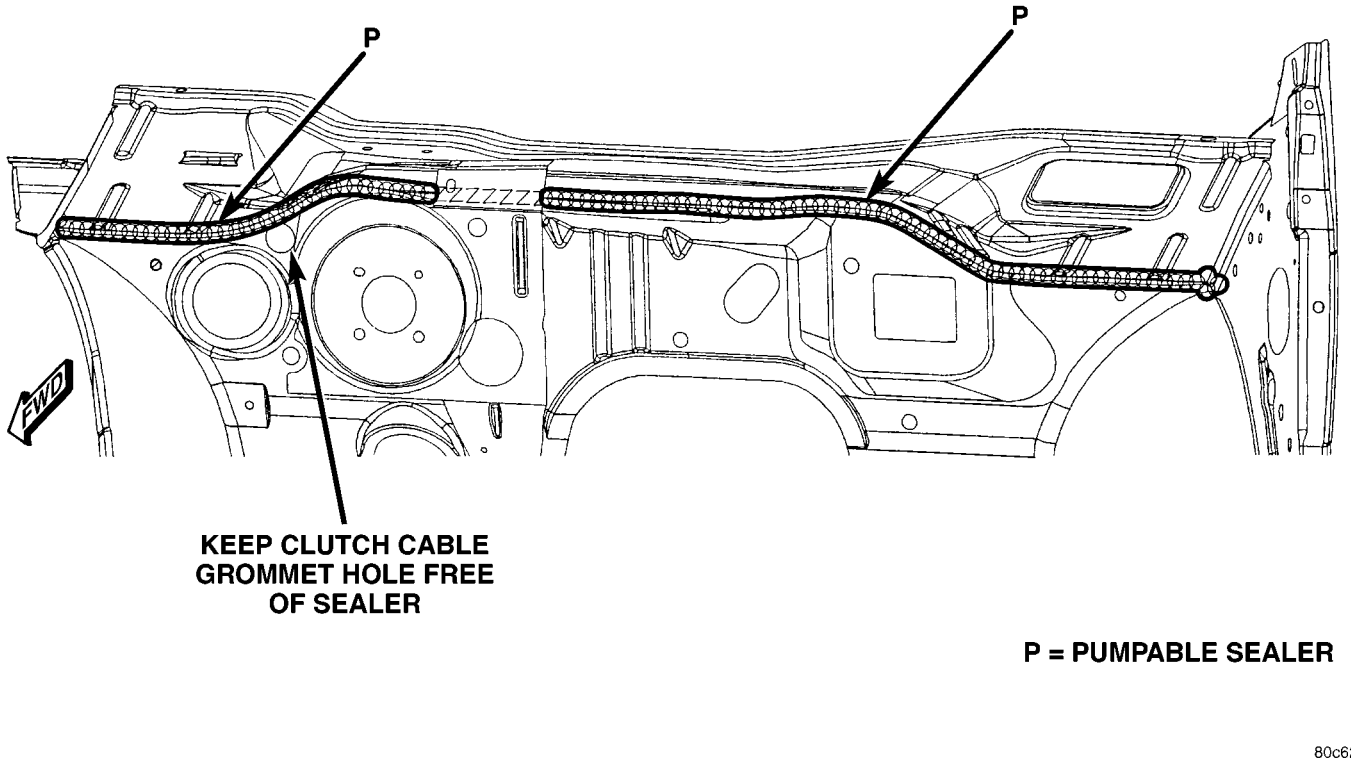

Fig. 9 DASH PANEL TO LOWER COWL PLENUM PANEL

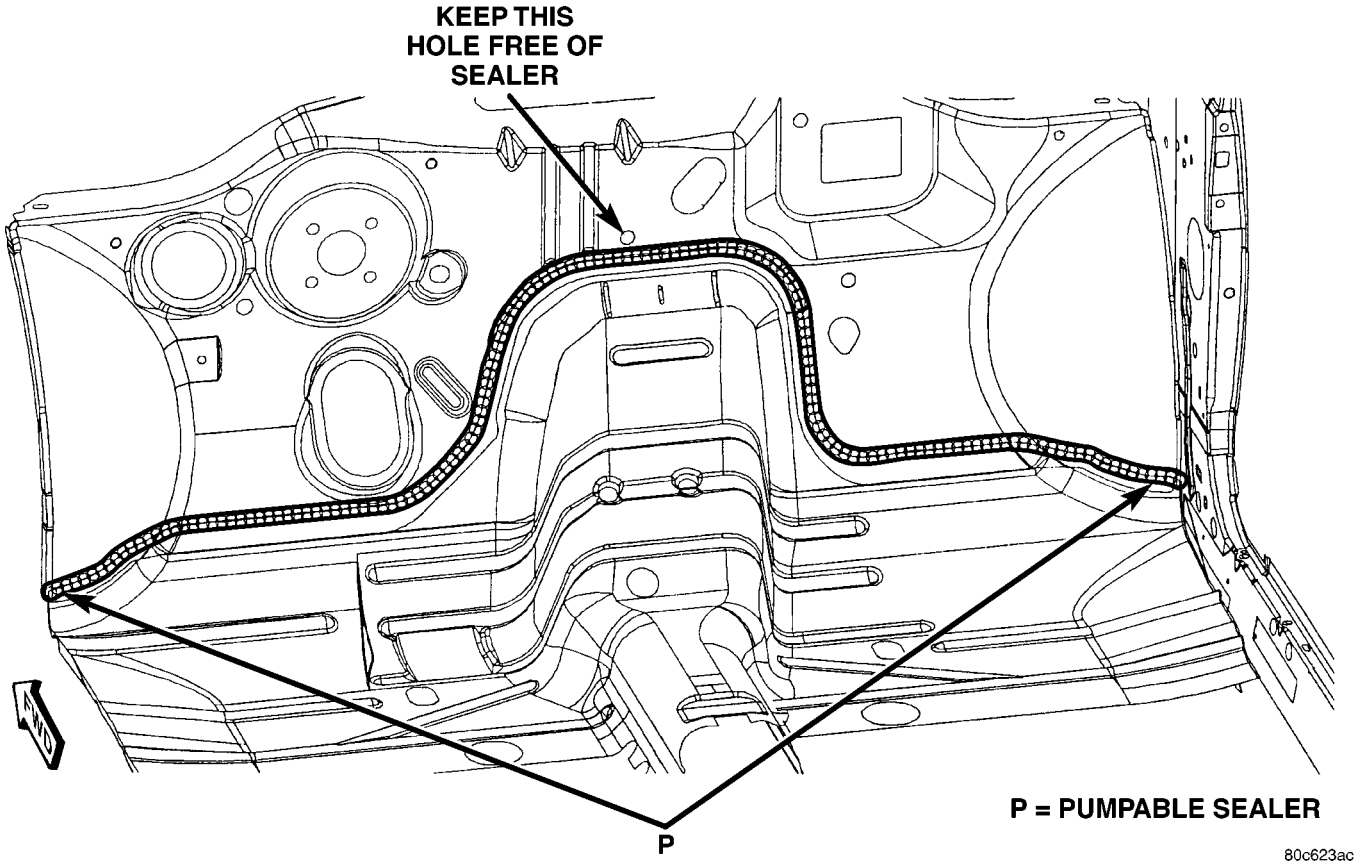

Fig. 10 DASH PANEL TO FRONT FLOOR PAN

SEALER LOCATIONS (Continued)

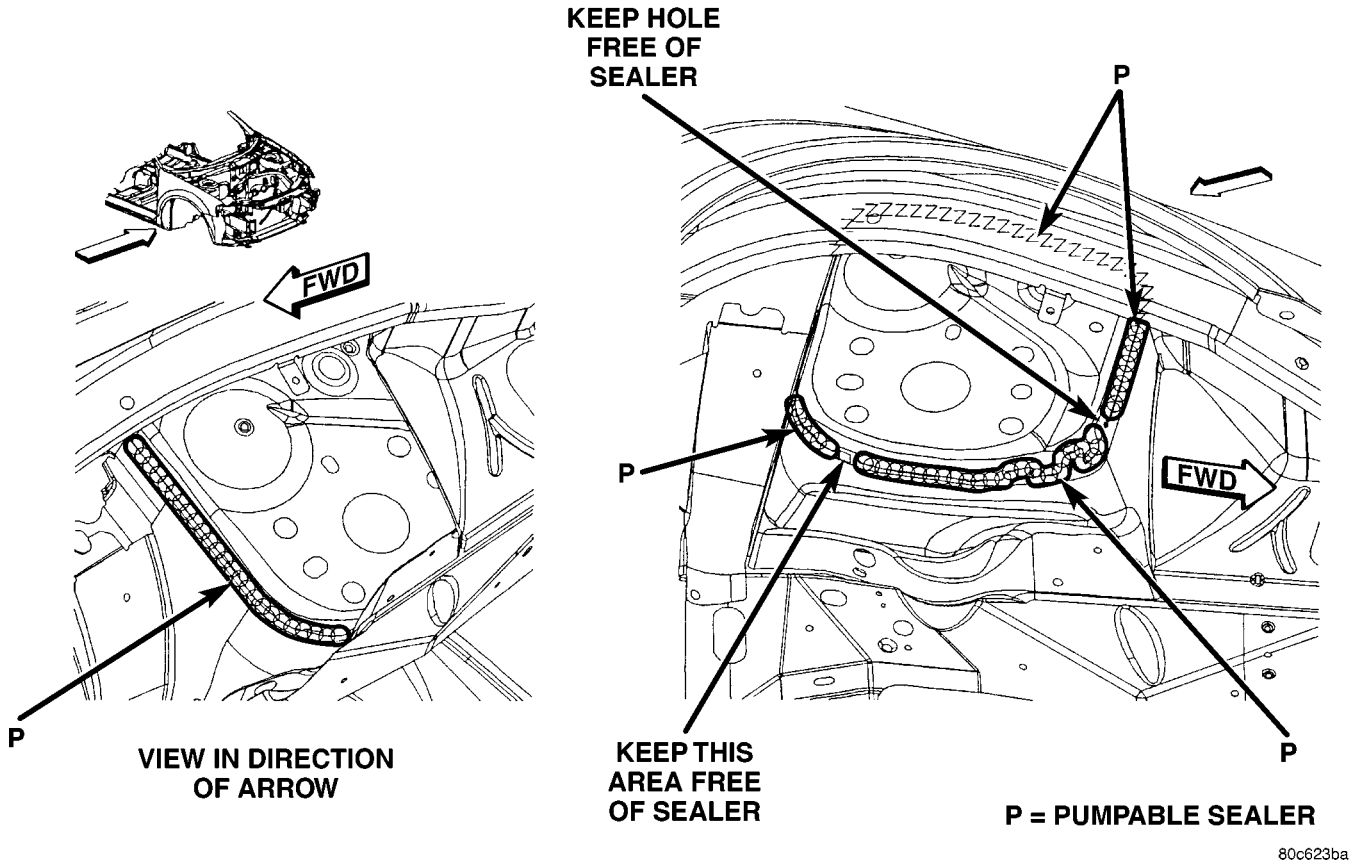

Fig. 11 FRONT SUSPENSION UPPER MOUNTING

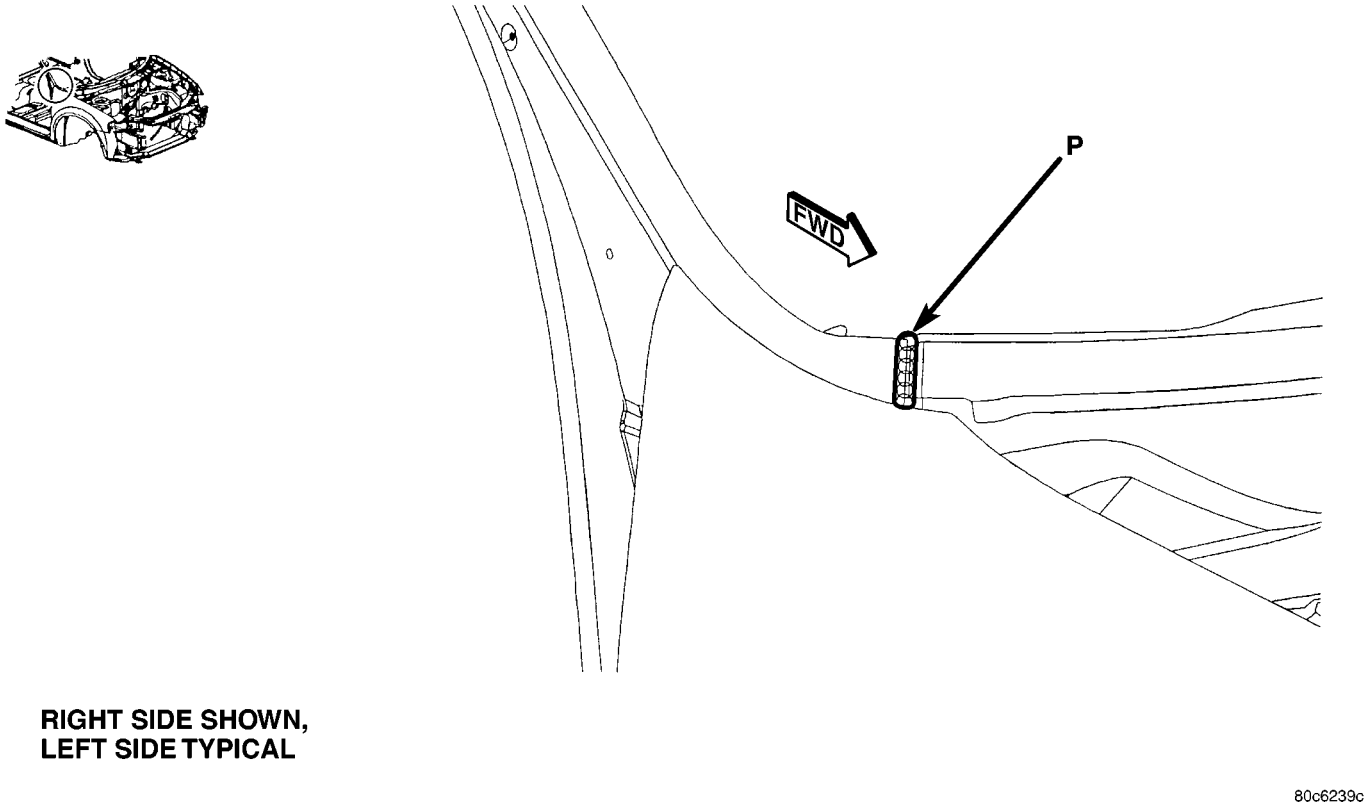

Fig. 12 "A" PILLAR TO UPPER COWL

SEALER LOCATIONS (Continued)

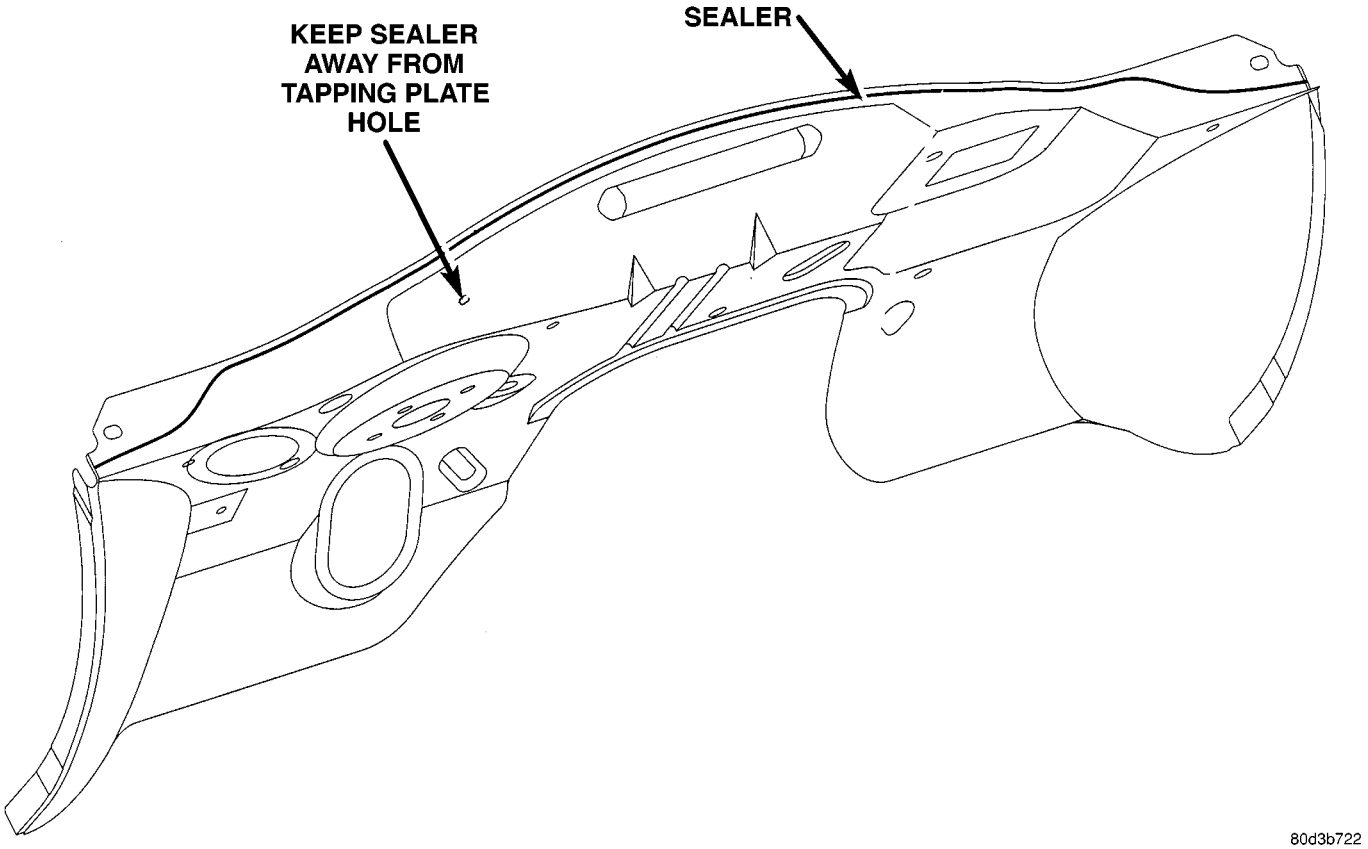

Fig. 13 DASH PANEL & LOWER COWL PLENUM

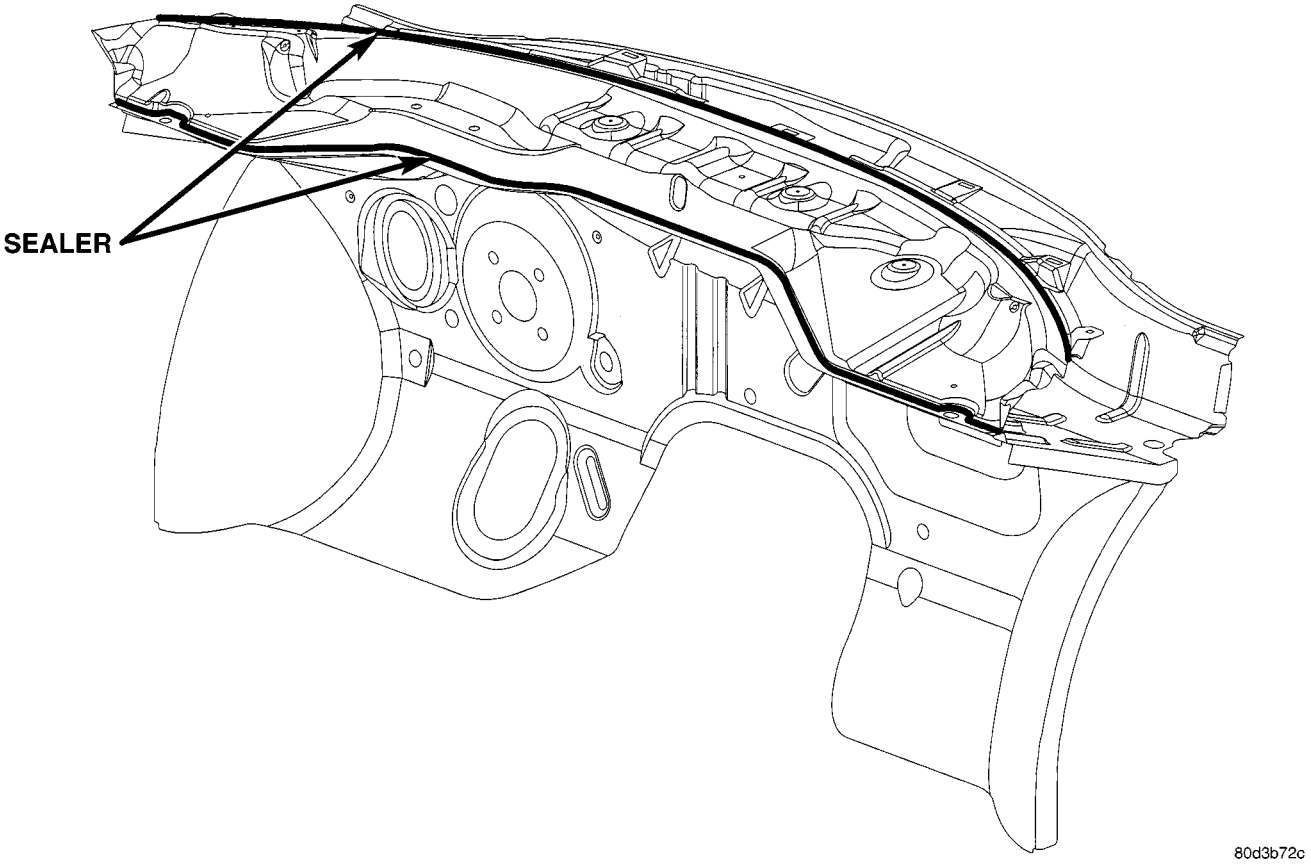

Fig. 14 COWL PLENUM CLOSURE, LOWER COWL PLENUM & UPPER COWL PLENUM

SEALER LOCATIONS (Continued)

SPECIFICATIONS - SEALER LOCATIONS - JR-27 ONLY

INDEX

DESCRIPTION	FIGURE
WINDSHIELD HEADER FRAME TO A-PILLAR	15
TAIL LAMP EXTENSION TO QUARTER PANEL AND DRAIN TROUGH	16
TAIL LAMP EXTENSION TO LOWER DECKLID PANEL	17
QUARTER PANEL TO DRAIN TROUGH	18
REAR SHELF PANEL REINFORCEMENT TO DRAIN TROUGH	19
A-PILLAR TO BODY SIDE OUTER PANEL	20
OUTER QUARTER TO BODY SIDE OUTER DOG LEG	21
LOWER DECK TO DRAIN TROUGH EXTENSION	22
FRONT DOOR LOWER HEM FLANGE	23
DECKLID HEM FLANGE	24
FRONT FLOOR PAN TO REAR FLOOR PAN	25
A-PILLAR TO COWL PLENUM PANEL	26
LOWER DECK OPENING TO REAR FLOOR PAN	27
LOWER INNER DECK OPENING TO TAIL LAMP EXTENSION	28
INNER BODY SILL TO FRONT FLOOR PAN	29
INNER SILL EXTENSION TO SHOULDER BELT SUPPORT REINFORCEMENT	30
INNER REAR WHEEL HOUSING TO EXTENSION	31
REAR FLOOR PAN DECKLID INNER AREA - RIGHT SIDE	32
REAR FLOOR PAN DECKLID INNER AREA - LEFT SIDE	33
REAR WHEEL HOUSE - LEFT SIDE	34
REAR WHEEL HOUSE - RIGHT SIDE	35
REAR SHOCK TOWER BRACKET	36
OUTER DECKLID TO OUTER DECKLID EXTENSION	37
UPPER & LOWER COWL PLENUM & COWL SIDE PANEL	38
INNER & OUTER UPPER LOAD PATH BEAM, COWL SIDE PANEL	39
OUTER QUARTER PANEL	40
OUTER QUARTER PANEL & SHELF ASSEMBLY	41
BODY SIDE APERTURE - INNER	42
INNER BODY SIDE APERTURE	43
BAFFLES SEAL & TAPE	44

SEALER LOCATIONS (Continued)

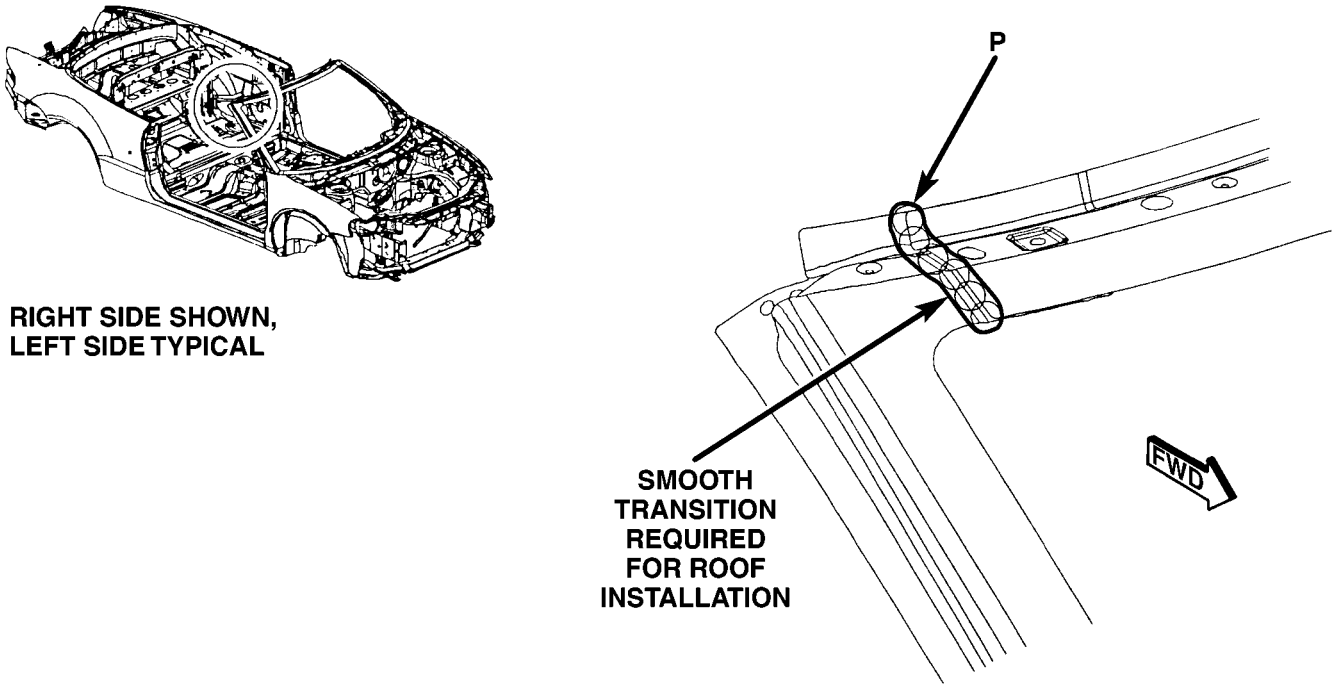

P = PUMPABLE SEALER

80c623bc

Fig. 15 WINDSHIELD HEADER FRAME TO A-PILLAR

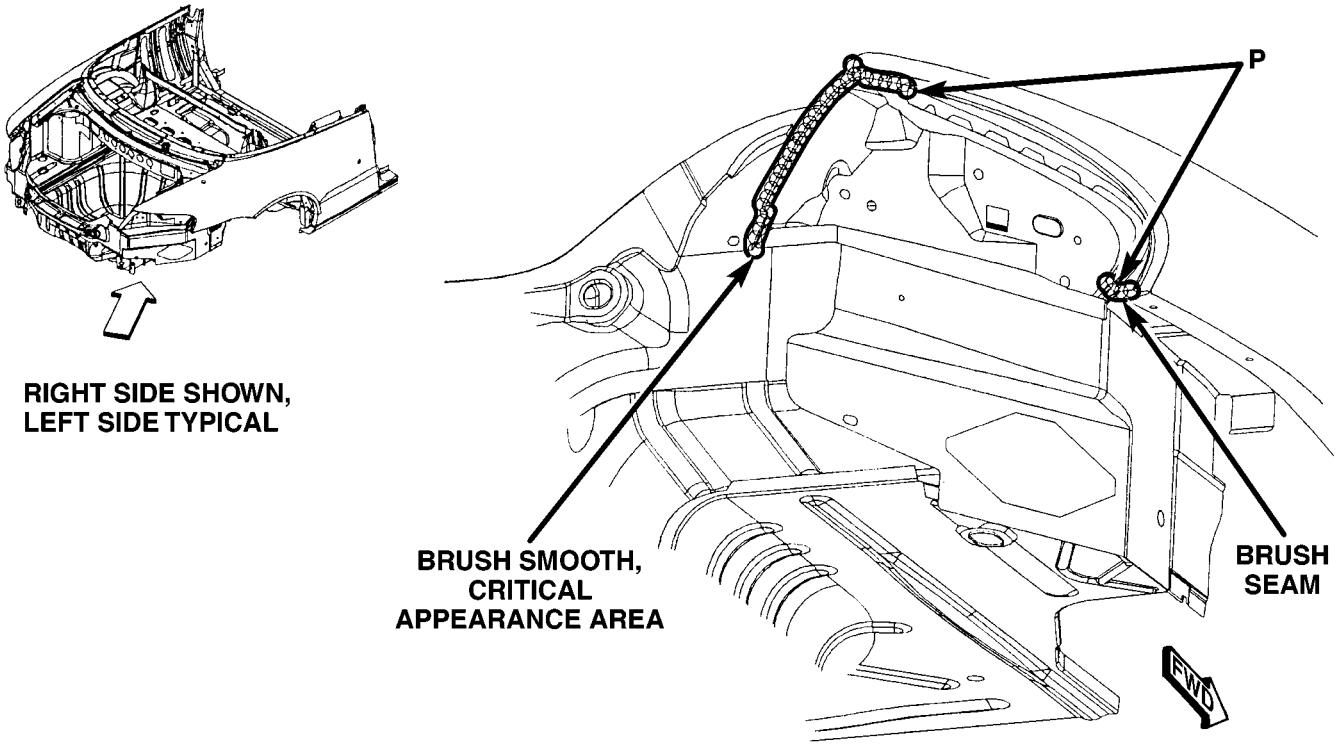

P = PUMPABLE SEALER

80c623bb

Fig. 16 TAIL LAMP EXTENSION TO QUARTER PANEL AND DRAIN TROUGH

SEALER LOCATIONS (Continued)

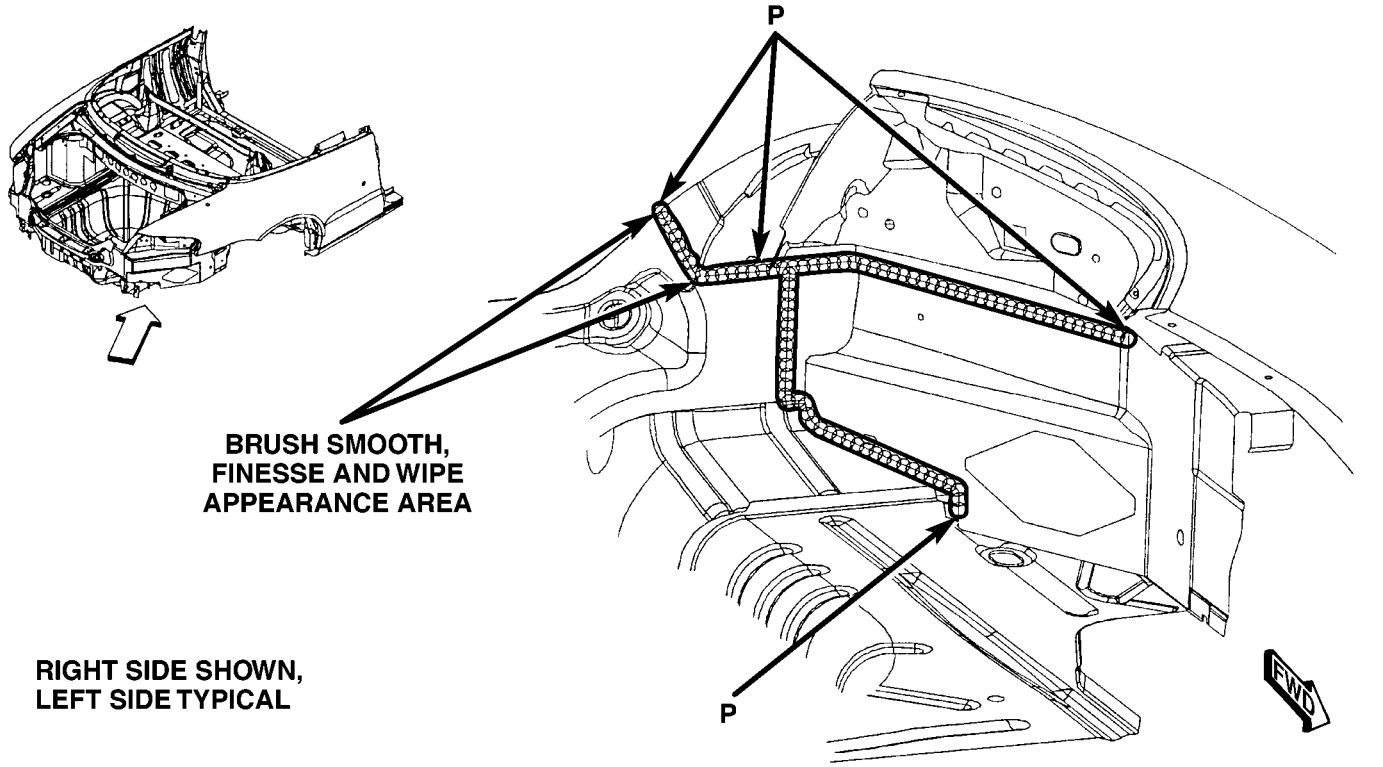

RIGHT SIDE SHOWN,
LEFT SIDE TYPICAL

P = PUMPABLE SEALER

80c623be

Fig. 17 TAIL LAMP EXTENSION TO LOWER DECKLID PANEL

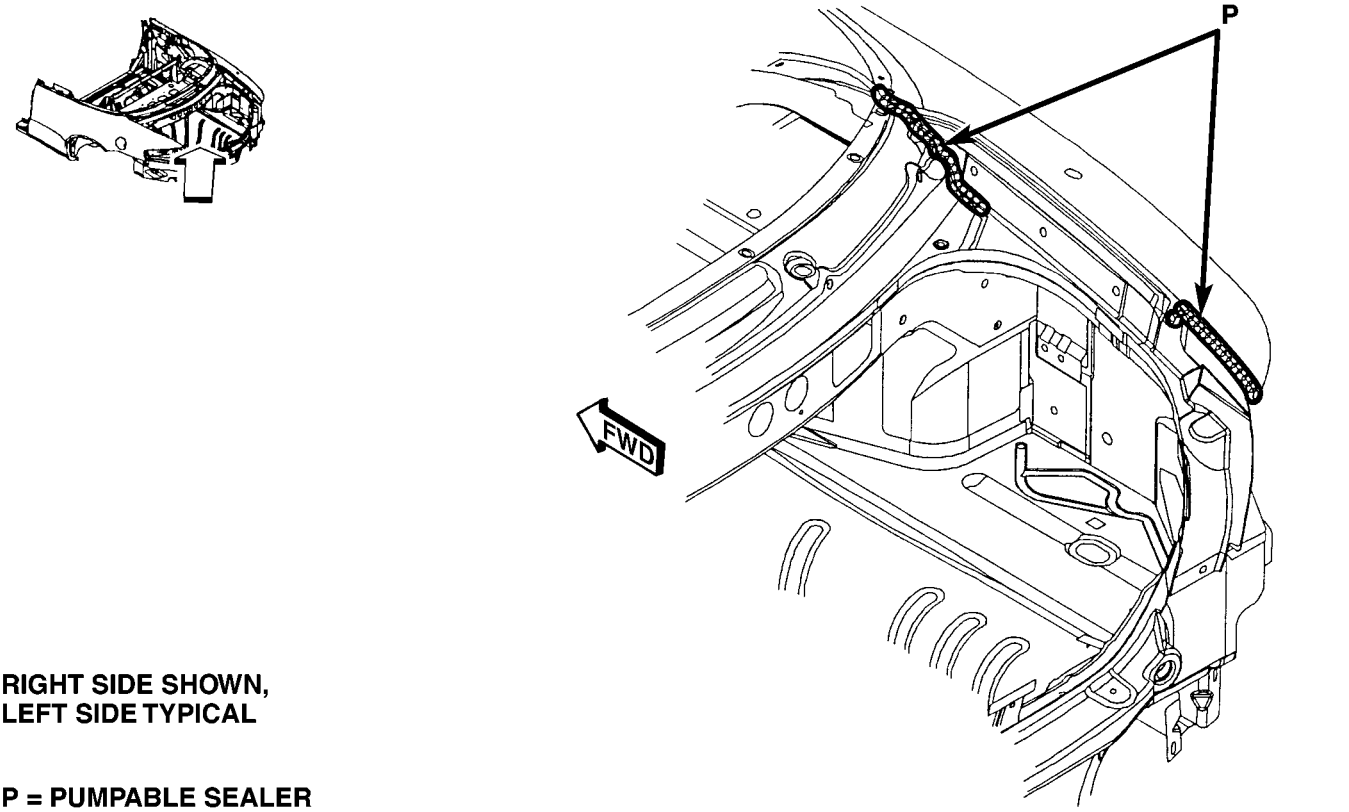

RIGHT SIDE SHOWN,
LEFT SIDE TYPICAL

P = PUMPABLE SEALER

80c623bf

Fig. 18 QUARTER PANEL TO DRAIN TROUGH

SEALER LOCATIONS (Continued)

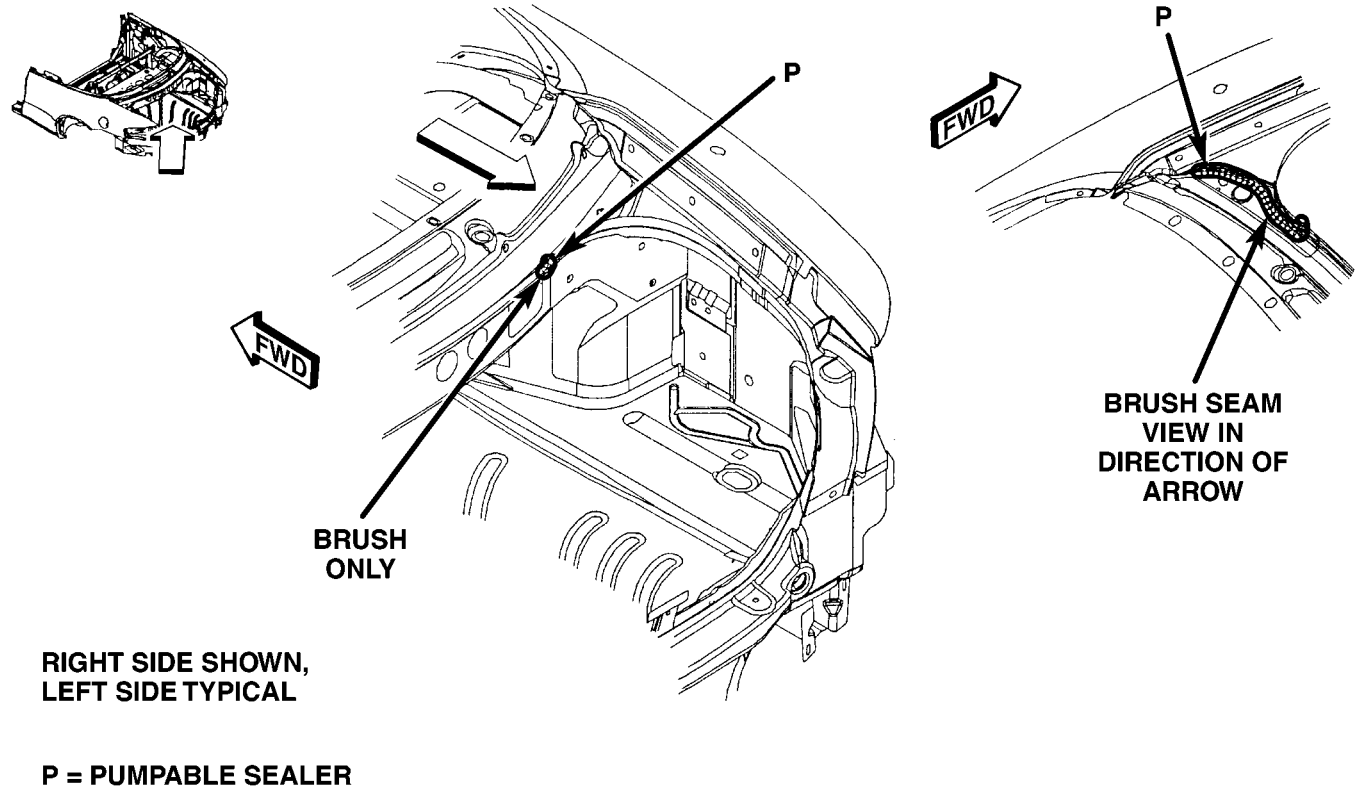

Fig. 19 REAR SHELF PANEL REINFORCEMENT TO DRAIN TROUGH

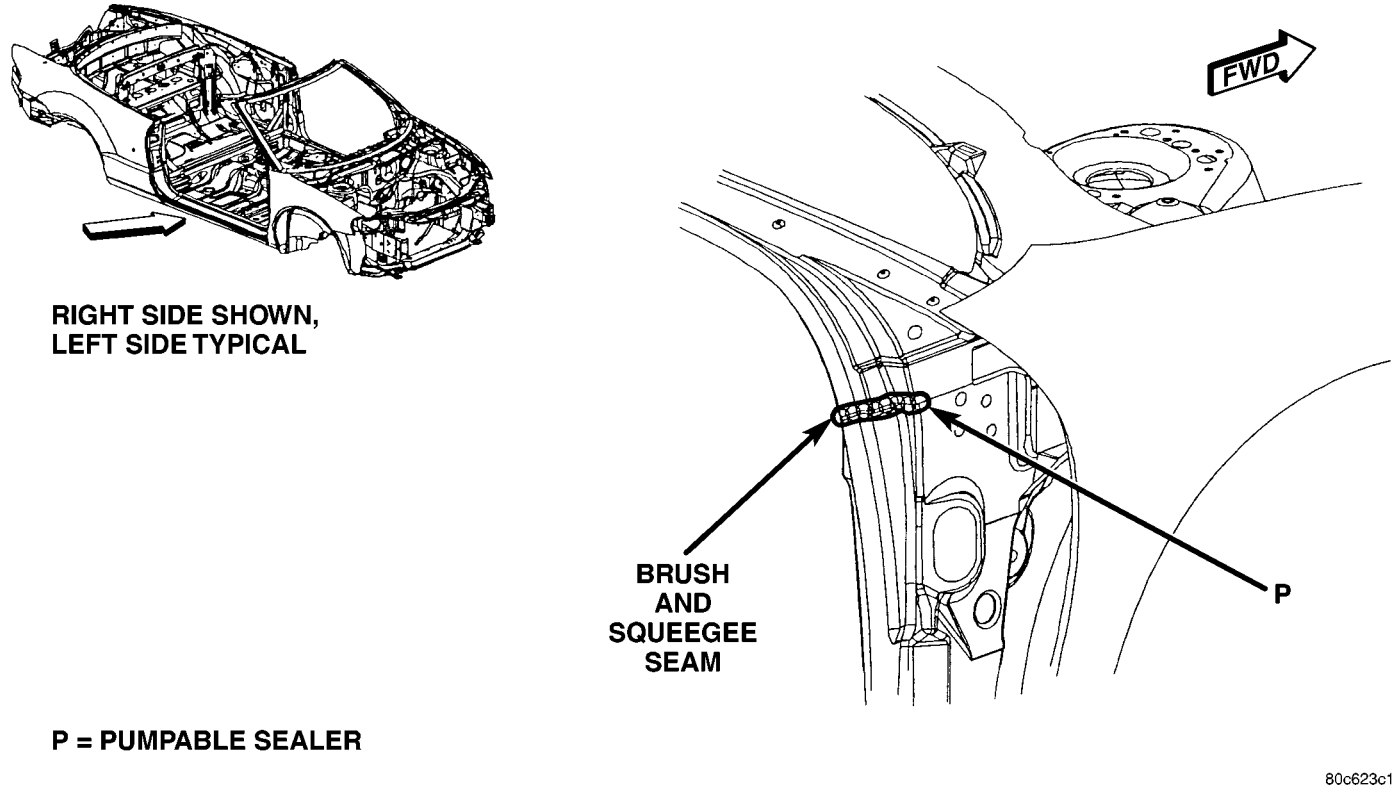

Fig. 20 A-PILLAR TO BODY SIDE OUTER PANEL

SEALER LOCATIONS (Continued)

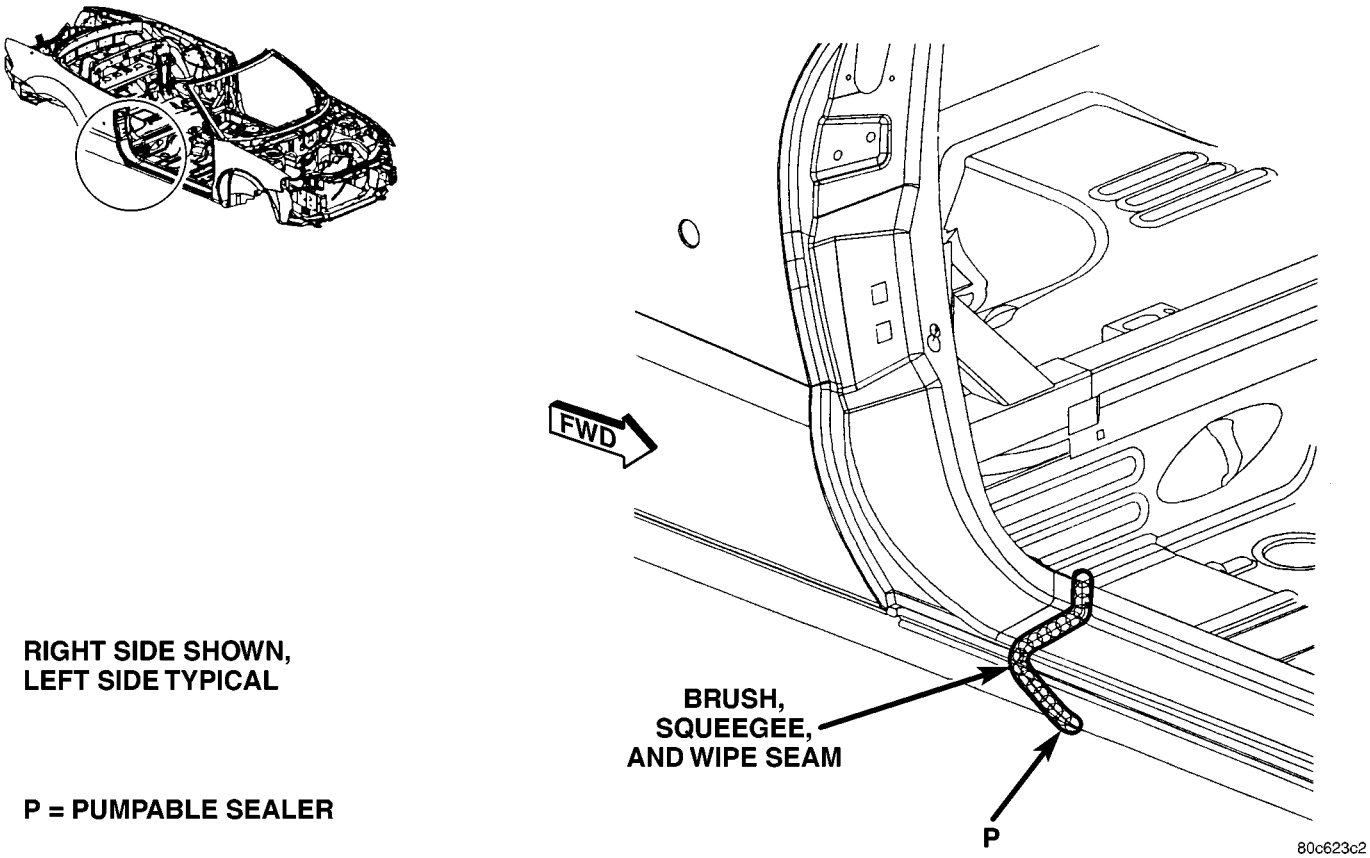

Fig. 21 OUTER QUARTER TO BODY SIDE OUTER DOG LEG

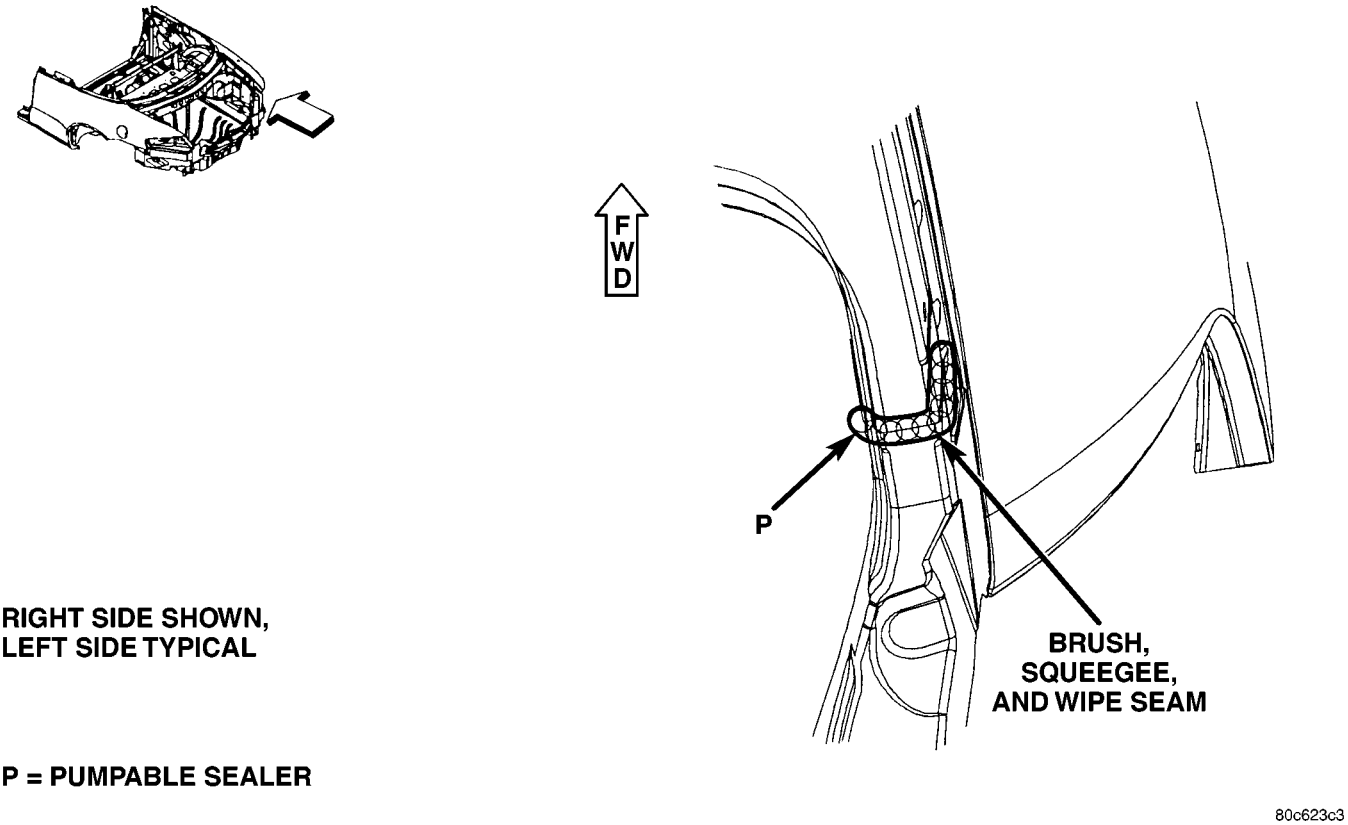

Fig. 22 LOWER DECK TO DRAIN TROUGH EXTENSION

SEALER LOCATIONS (Continued)

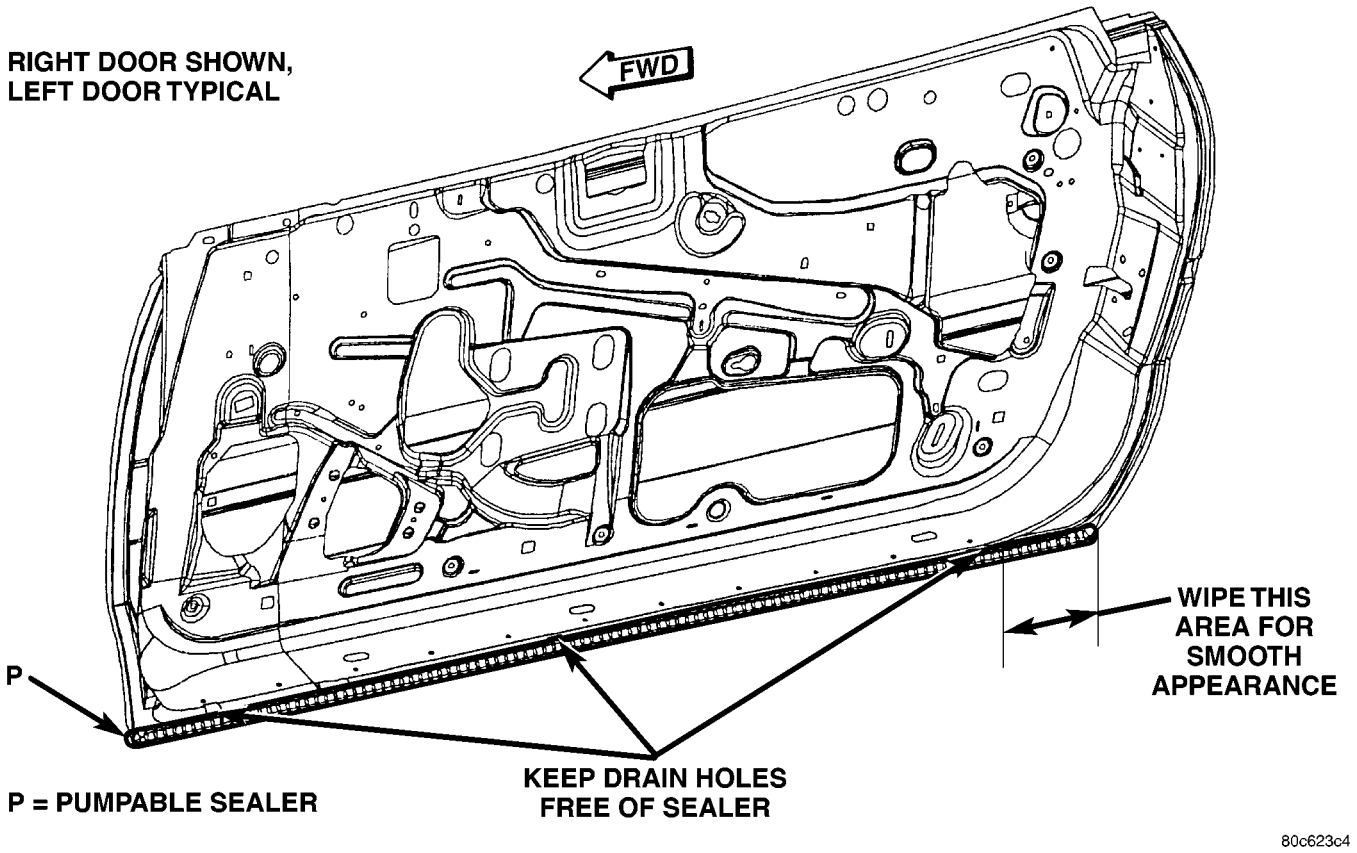

Fig. 23 FRONT DOOR LOWER HEM FLANGE

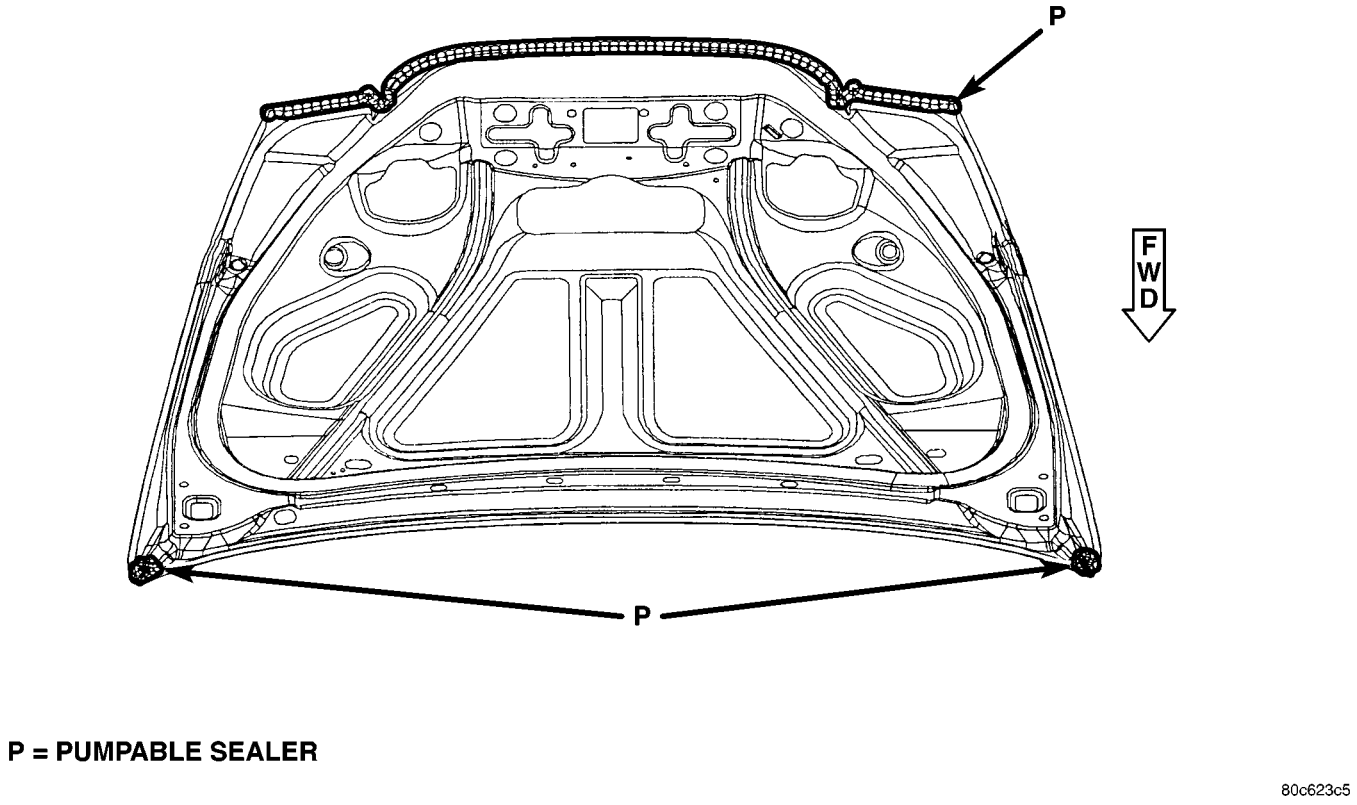

Fig. 24 DECKLID HEM FLANGE

SEALER LOCATIONS (Continued)

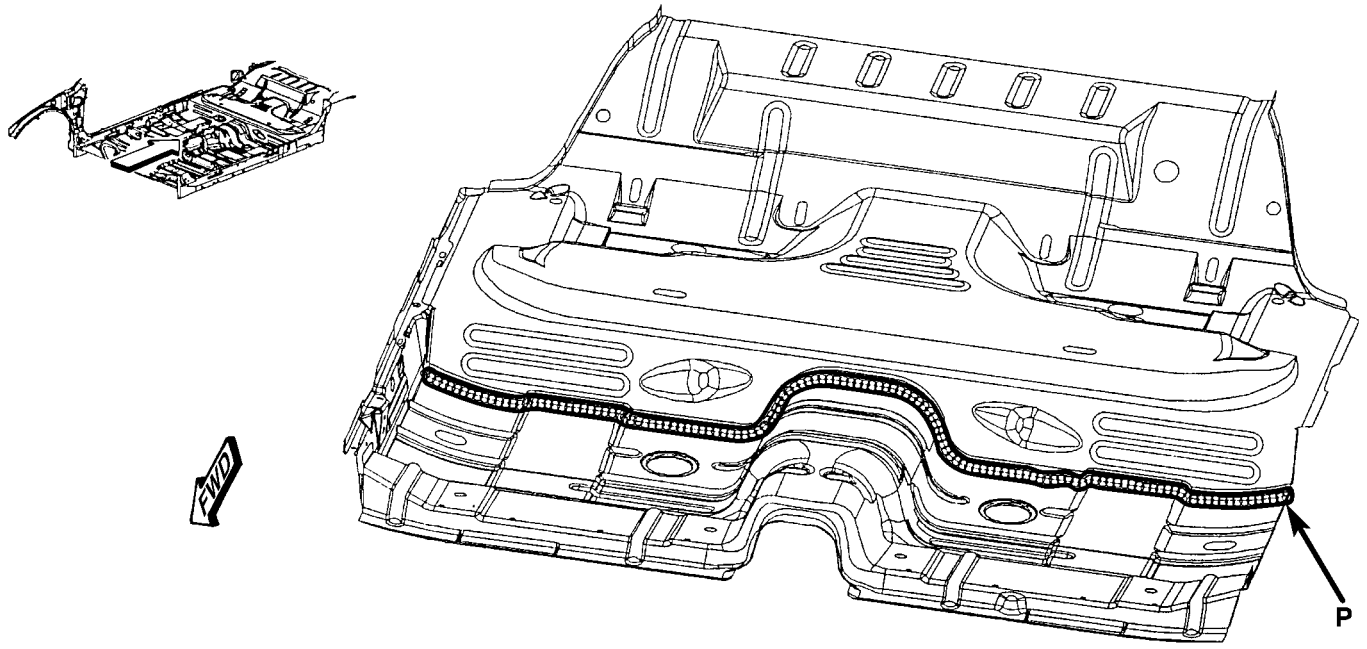

P = PUMPABLE SEALER

80c623c6

Fig. 25 FRONT FLOOR PAN TO REAR FLOOR PAN

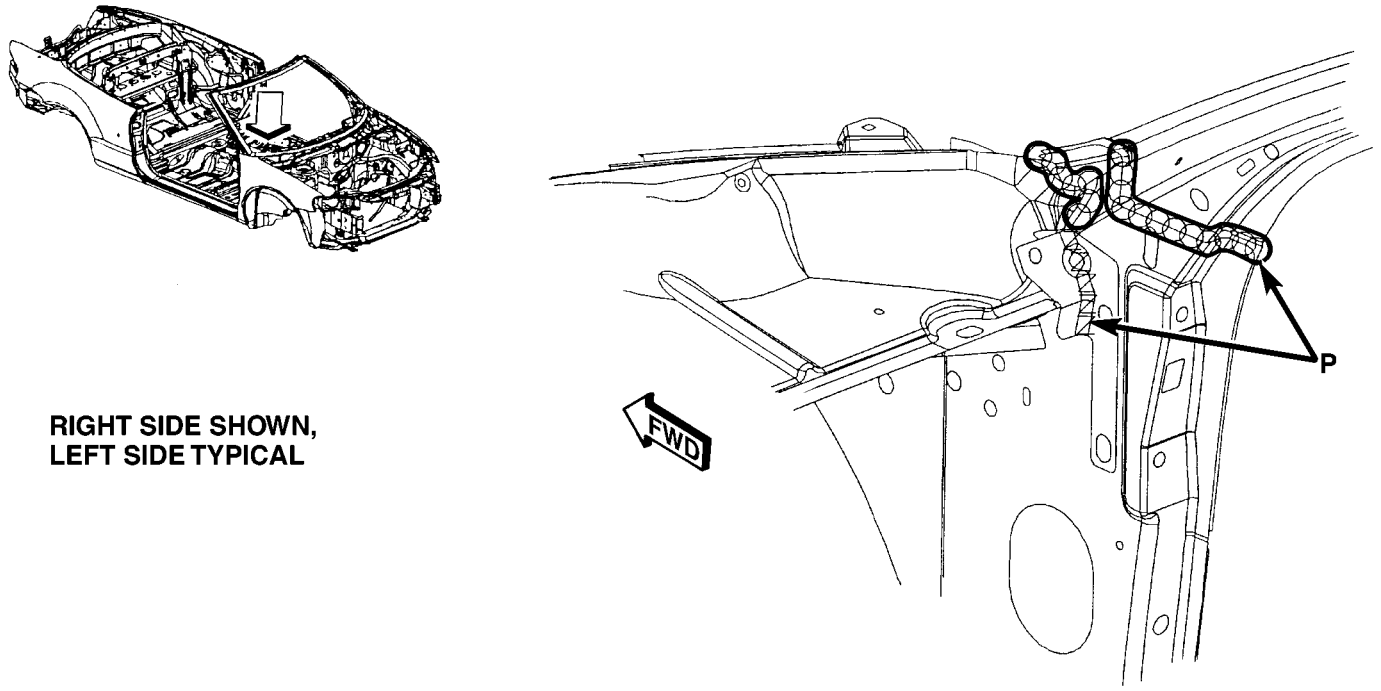

RIGHT SIDE SHOWN,
LEFT SIDE TYPICAL

P = PUMPABLE SEALER

80c623c7

Fig. 26 A-PILLAR TO COWL PLENUM PANEL

SEALER LOCATIONS (Continued)

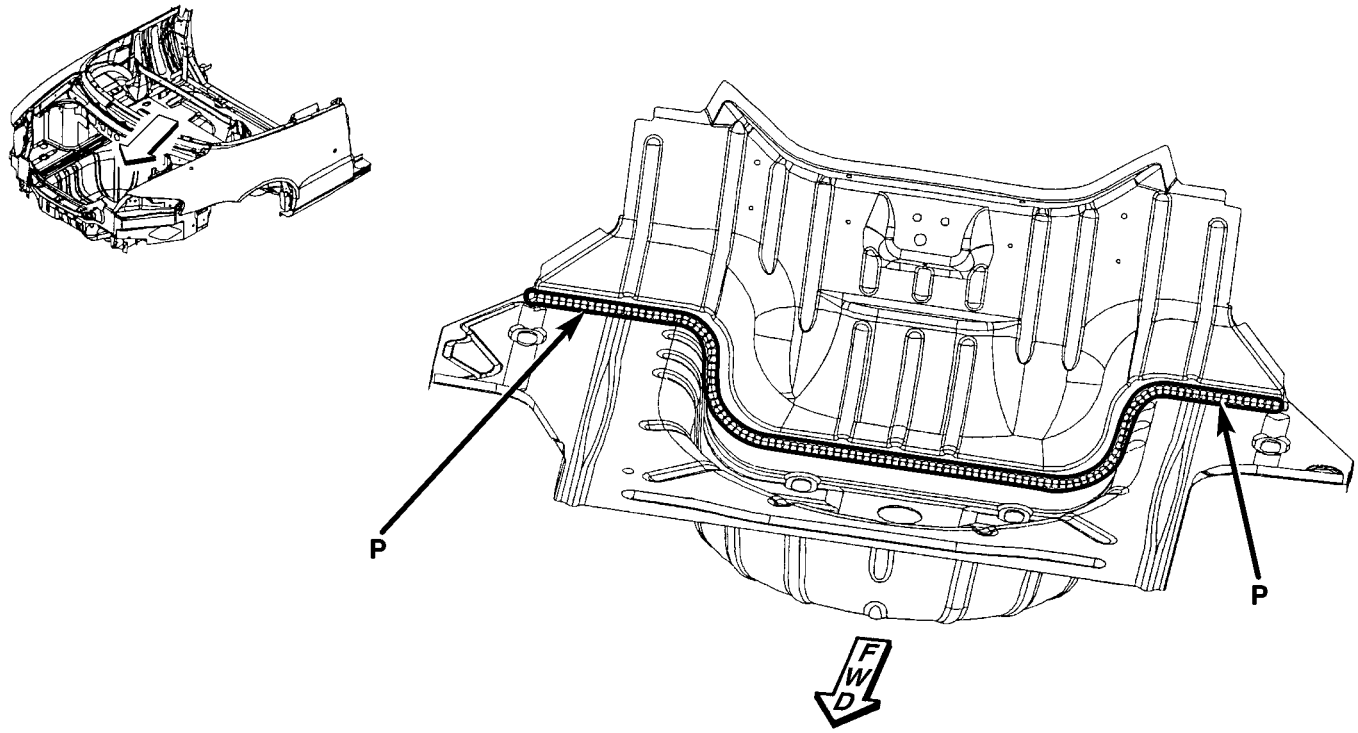

P = PUMPABLE SEALER

80c623c8

Fig. 27 LOWER DECK OPENING TO REAR FLOOR PAN

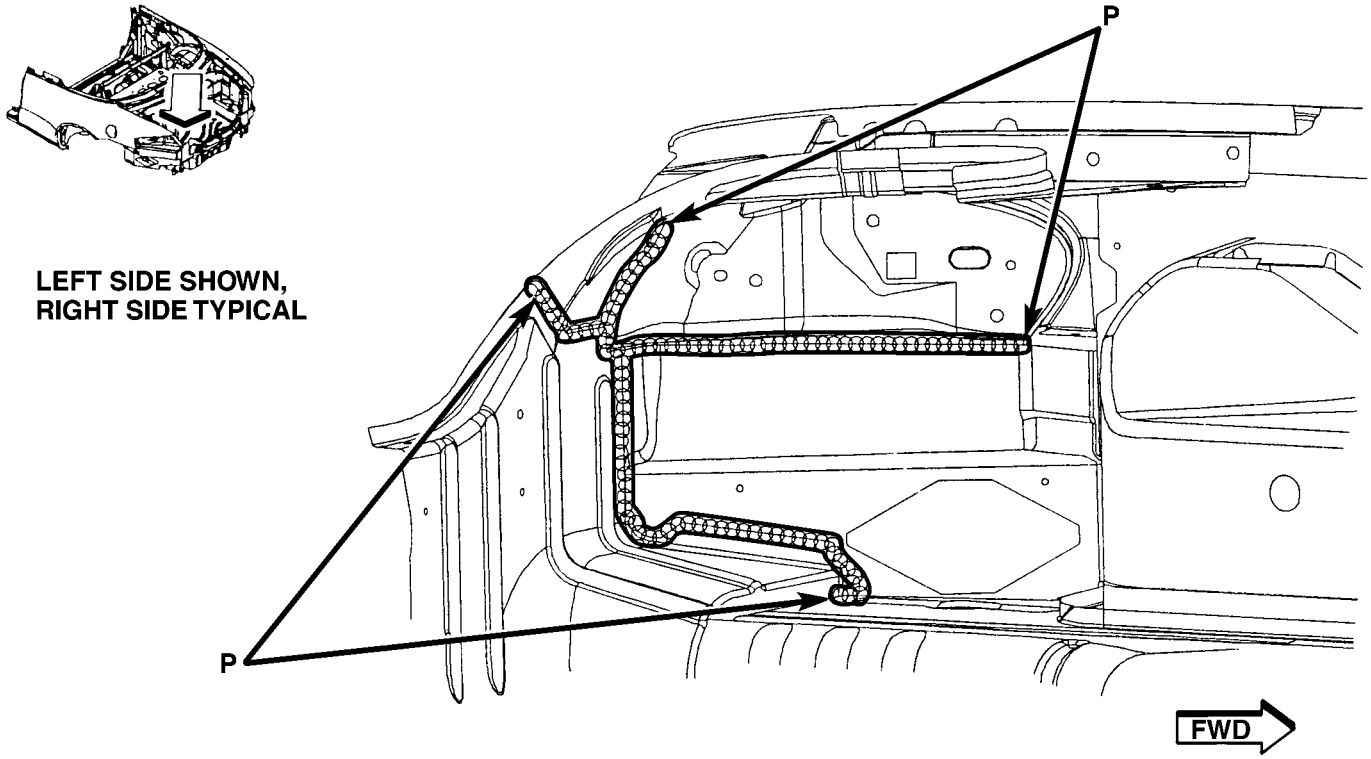

LEFT SIDE SHOWN,
RIGHT SIDE TYPICAL

P = PUMPABLE SEALER

80c623c9

Fig. 28 LOWER INNER DECK OPENING TO TAIL LAMP EXTENSION

SEALER LOCATIONS (Continued)

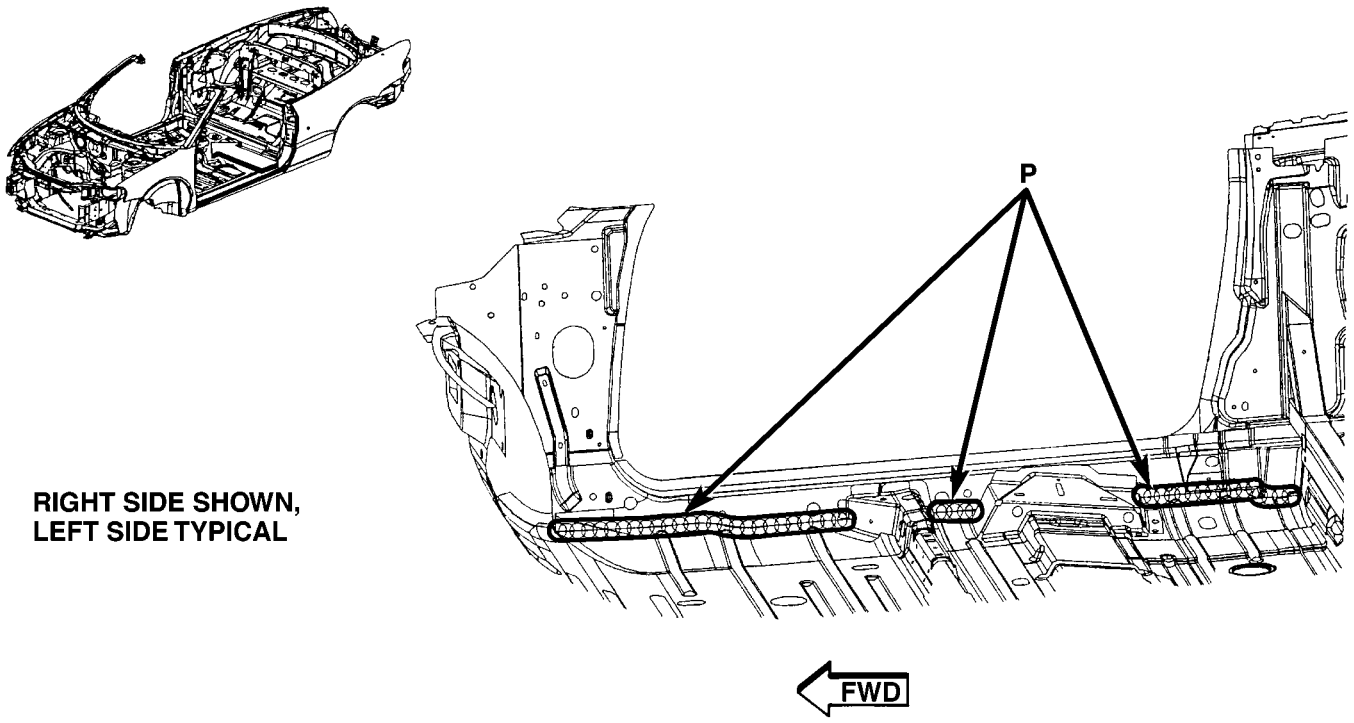

Fig. 29 INNER BODY SILL TO FRONT FLOOR PAN

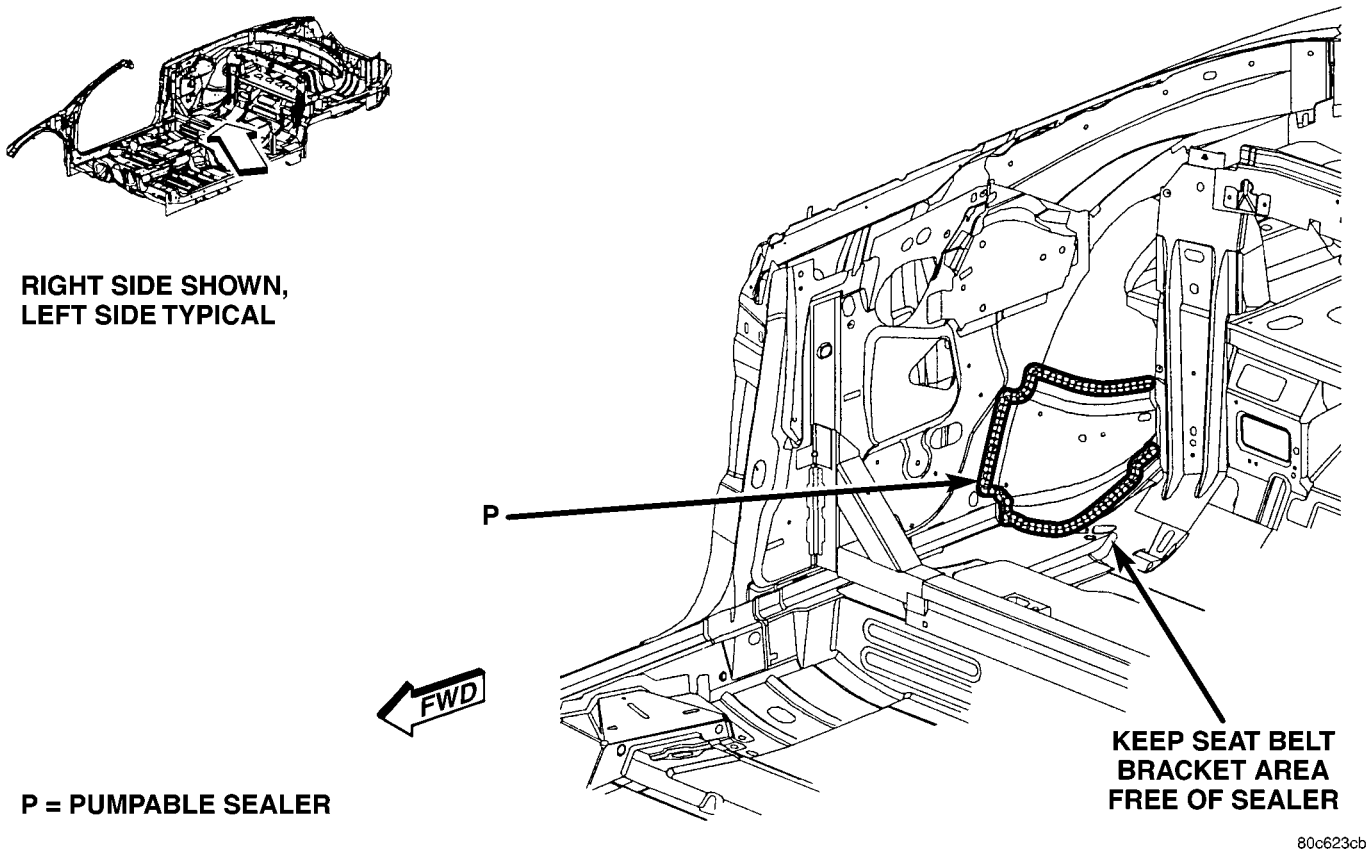

Fig. 30 INNER SILL EXTENSION TO SHOULDER BELT SUPPORT REINFORCEMENT

SEALER LOCATIONS (Continued)

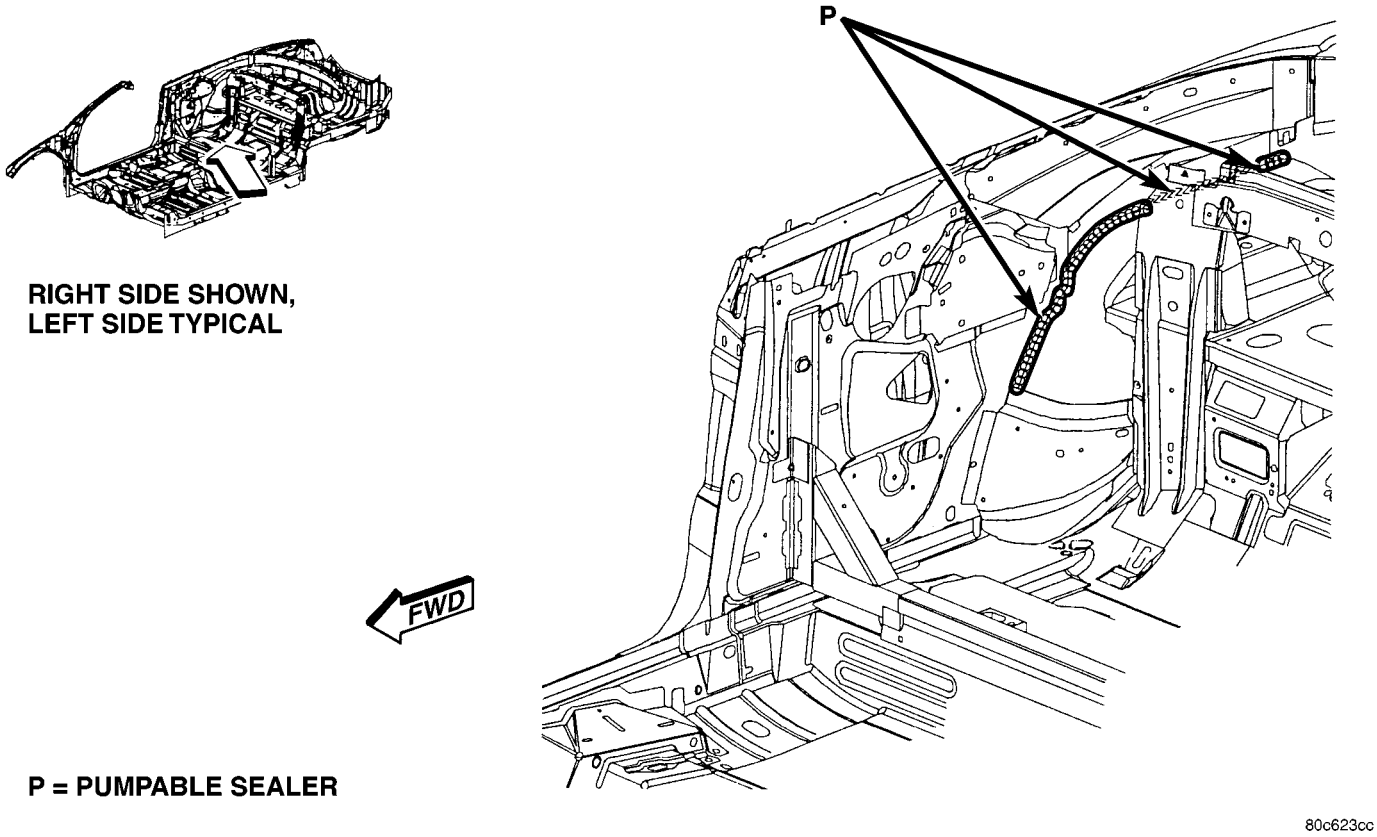

Fig. 31 INNER REAR WHEEL HOUSING TO EXTENSION

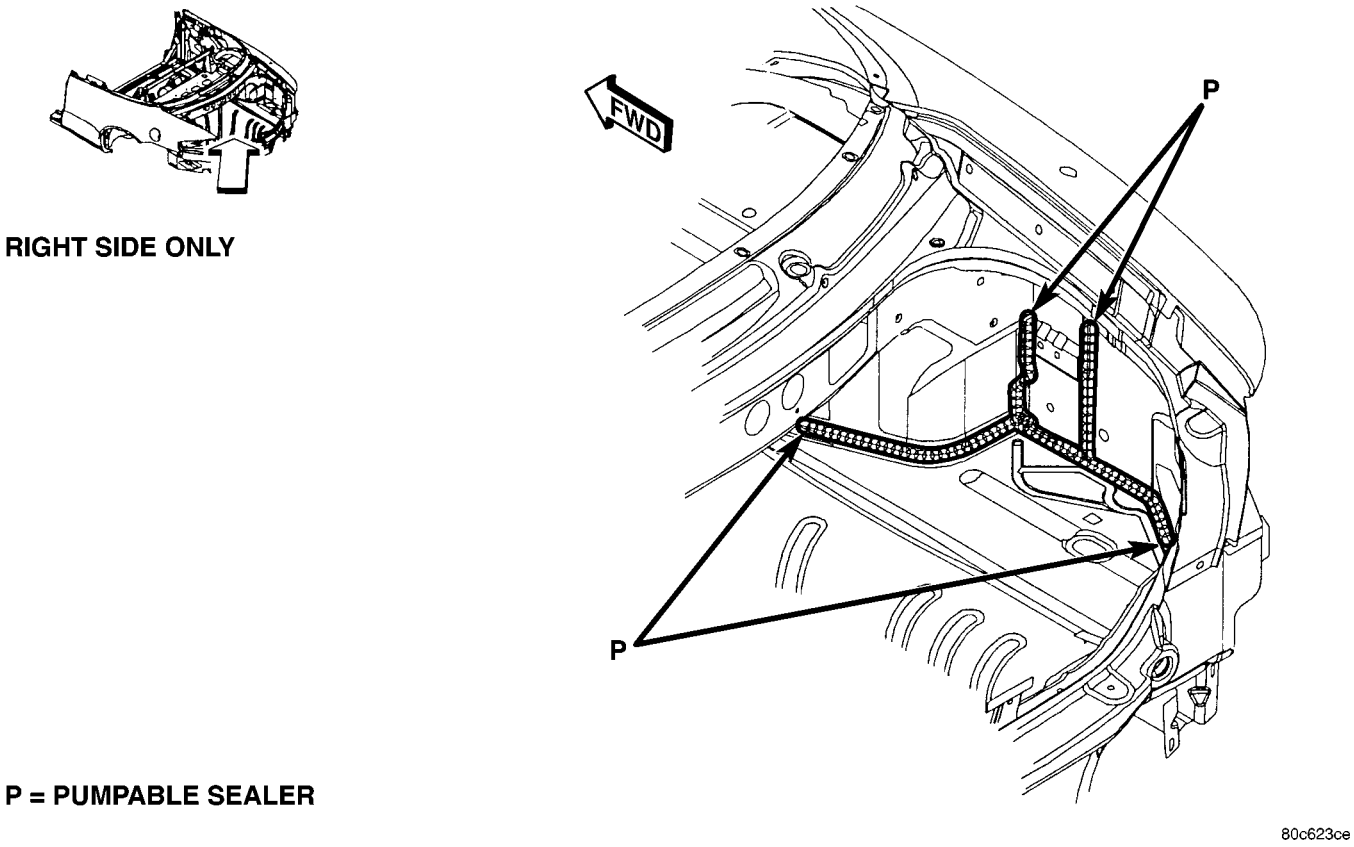

Fig. 32 REAR FLOOR PAN DECKLID INNER AREA - RIGHT SIDE

SEALER LOCATIONS (Continued)

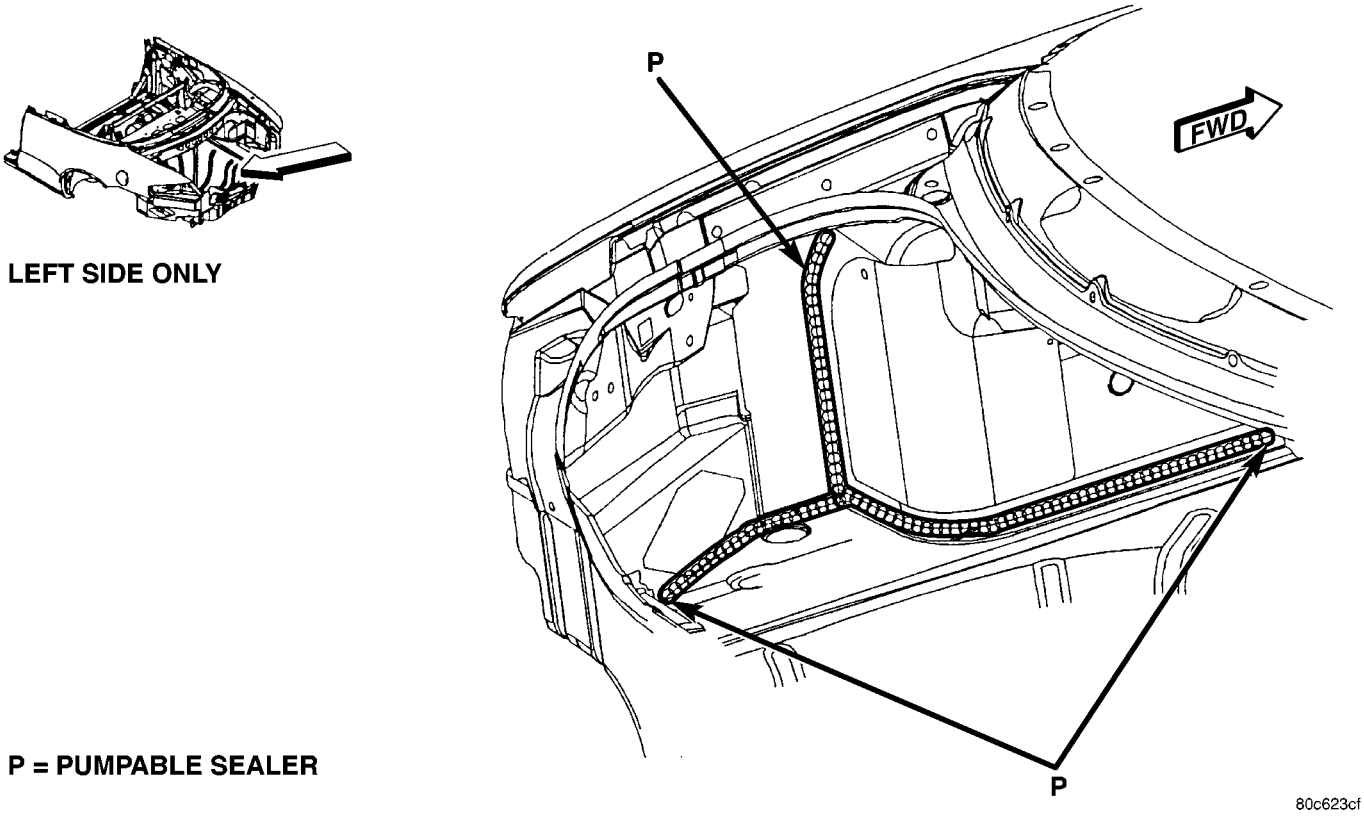

Fig. 33 REAR FLOOR PAN DECKLID INNER AREA - LEFT SIDE

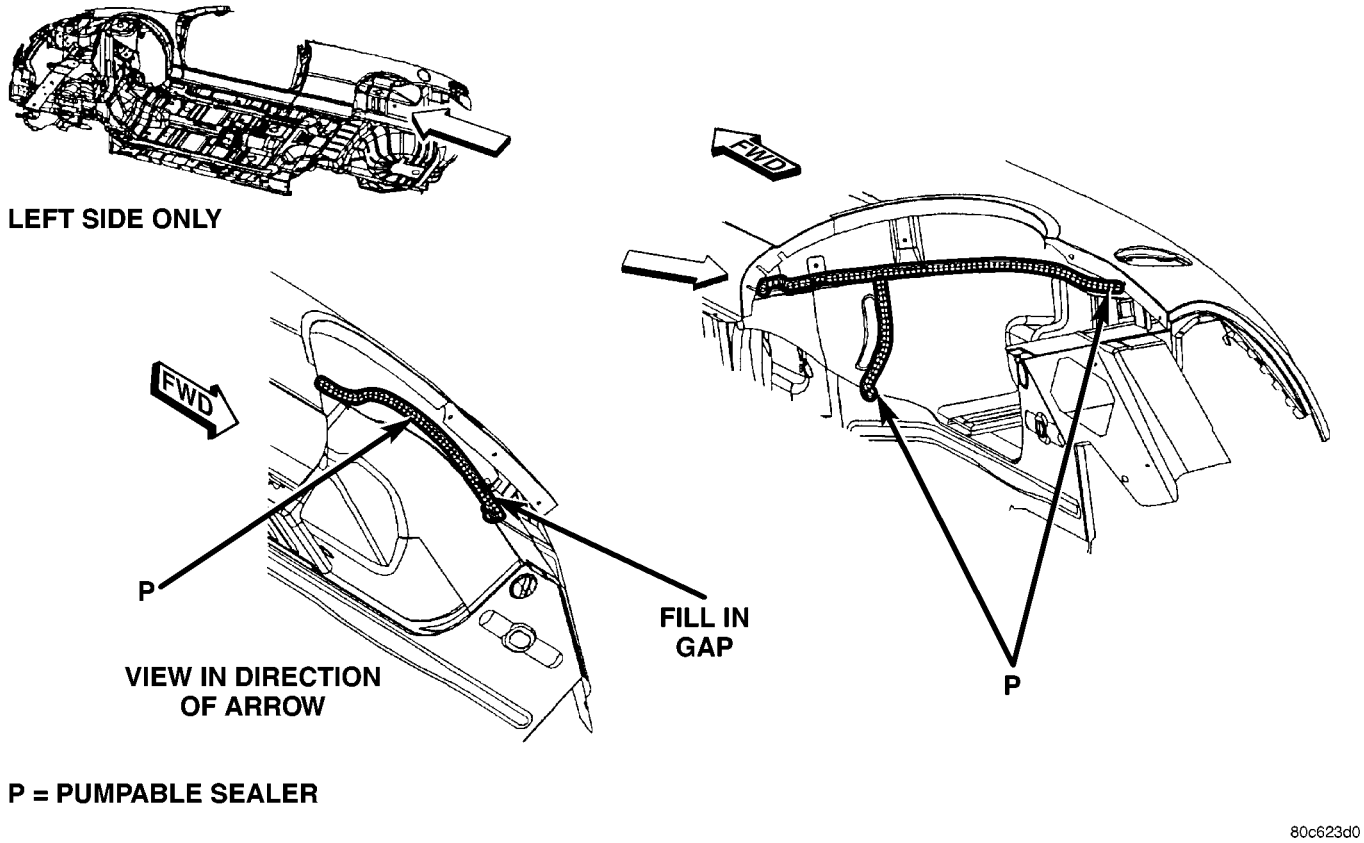

Fig. 34 REAR WHEEL HOUSE - LEFT SIDE

SEALER LOCATIONS (Continued)

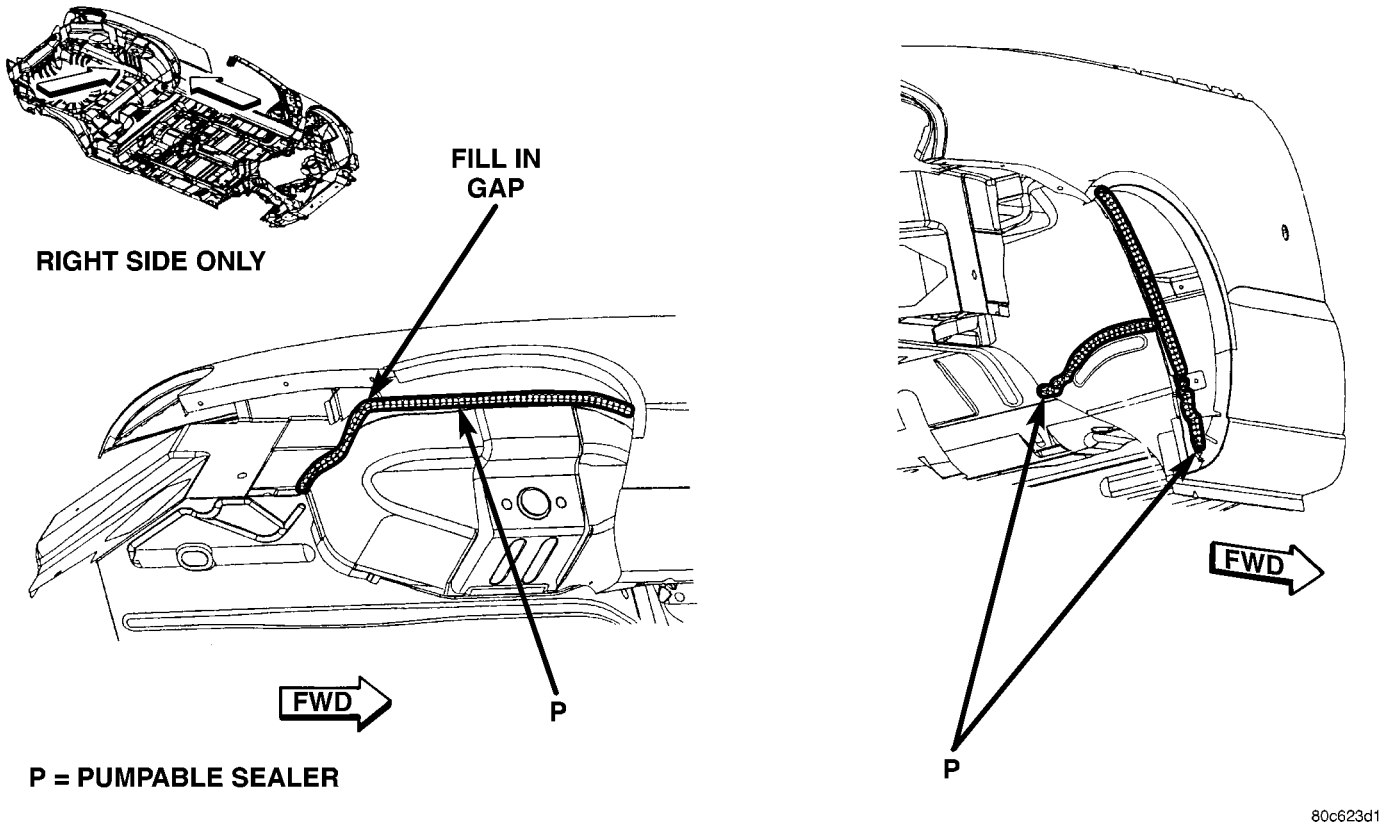

Fig. 35 REAR WHEEL HOUSE - RIGHT SIDE

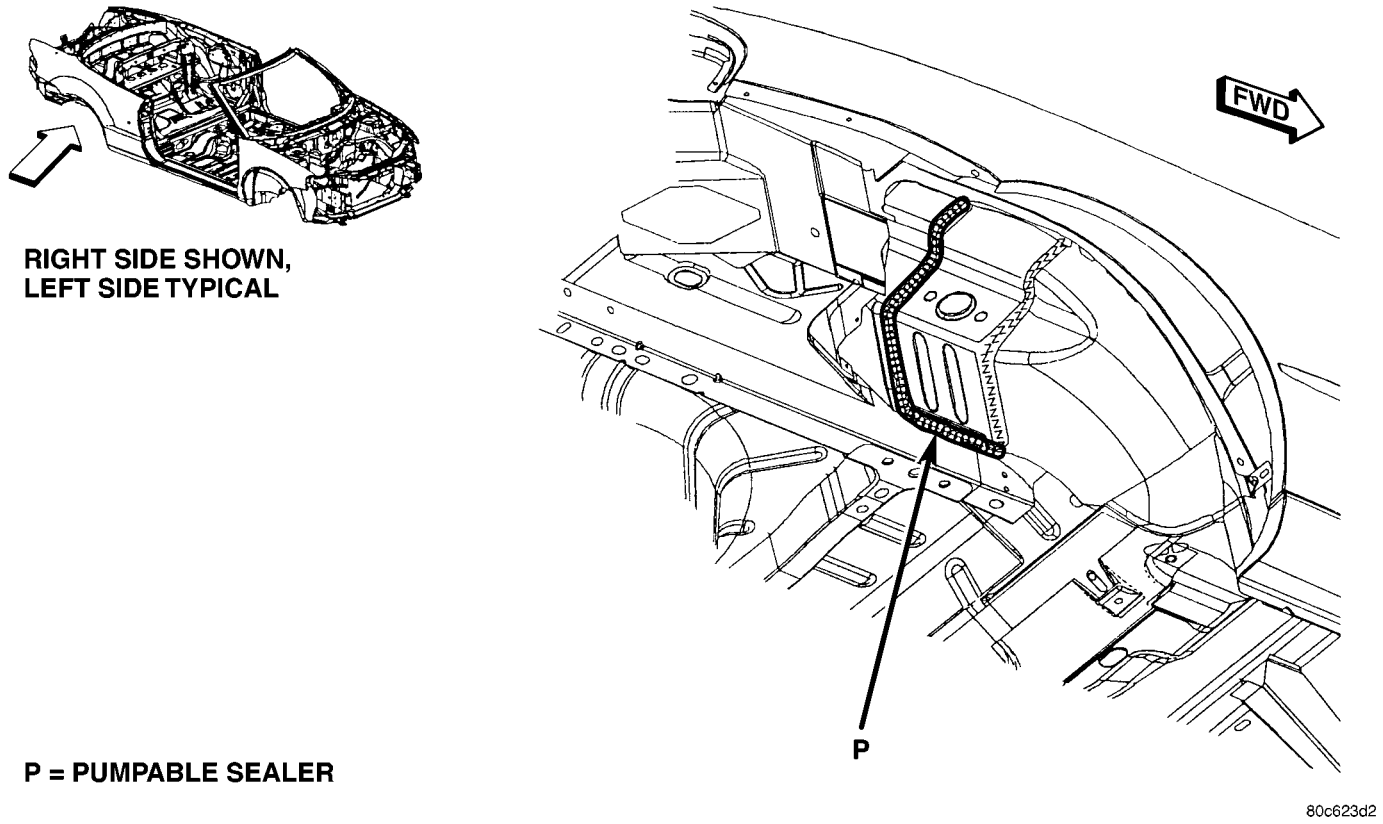

Fig. 36 REAR SHOCK TOWER BRACKET

SEALER LOCATIONS (Continued)

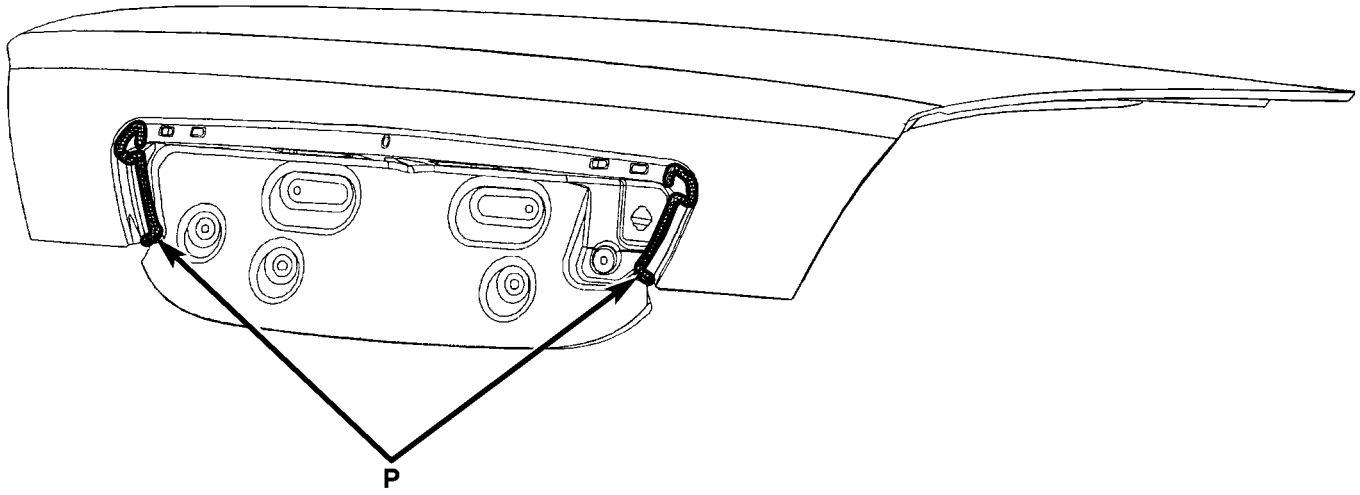

P = PUMPABLE SEALER

80c623d3

Fig. 37 OUTER DECKLID TO OUTER DECKLID EXTENSION

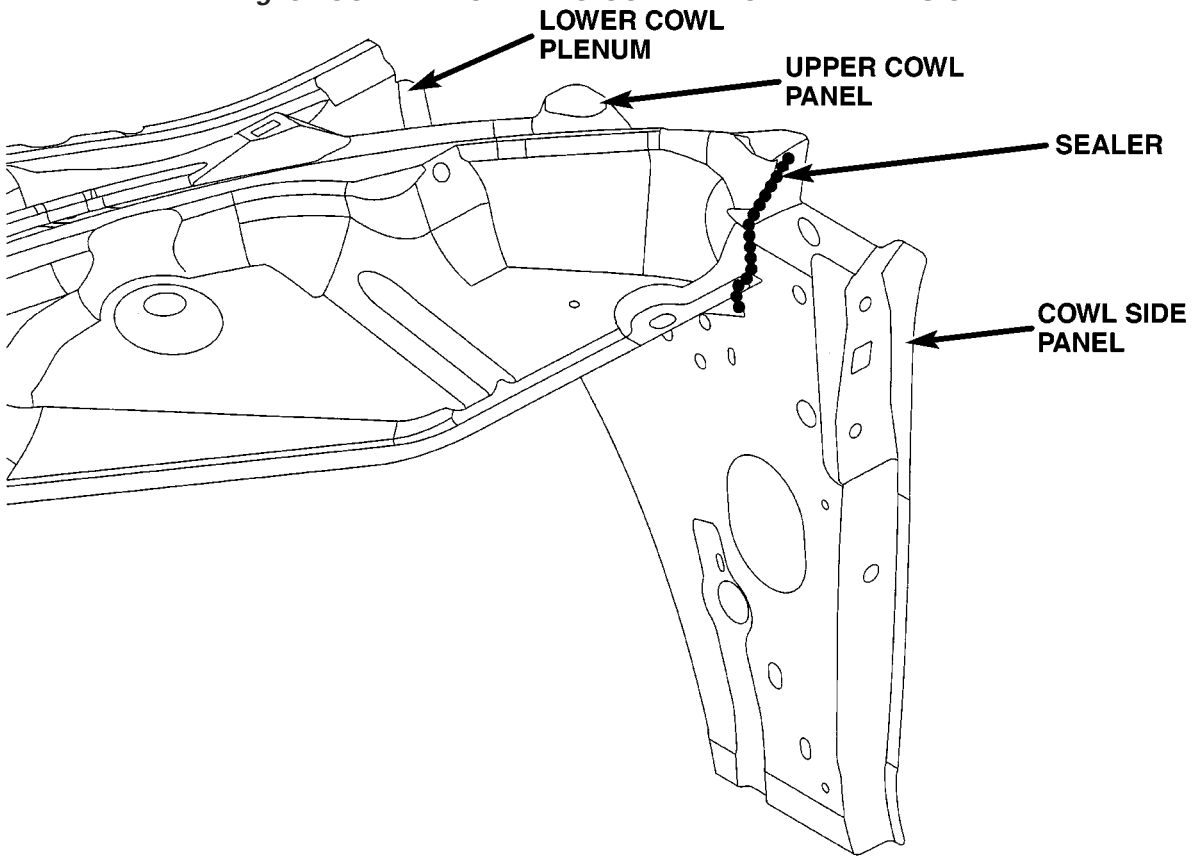

80d3b8e9

Fig. 38 UPPER & LOWER COWL PLENUM & COWL SIDE PANEL

SEALER LOCATIONS (Continued)

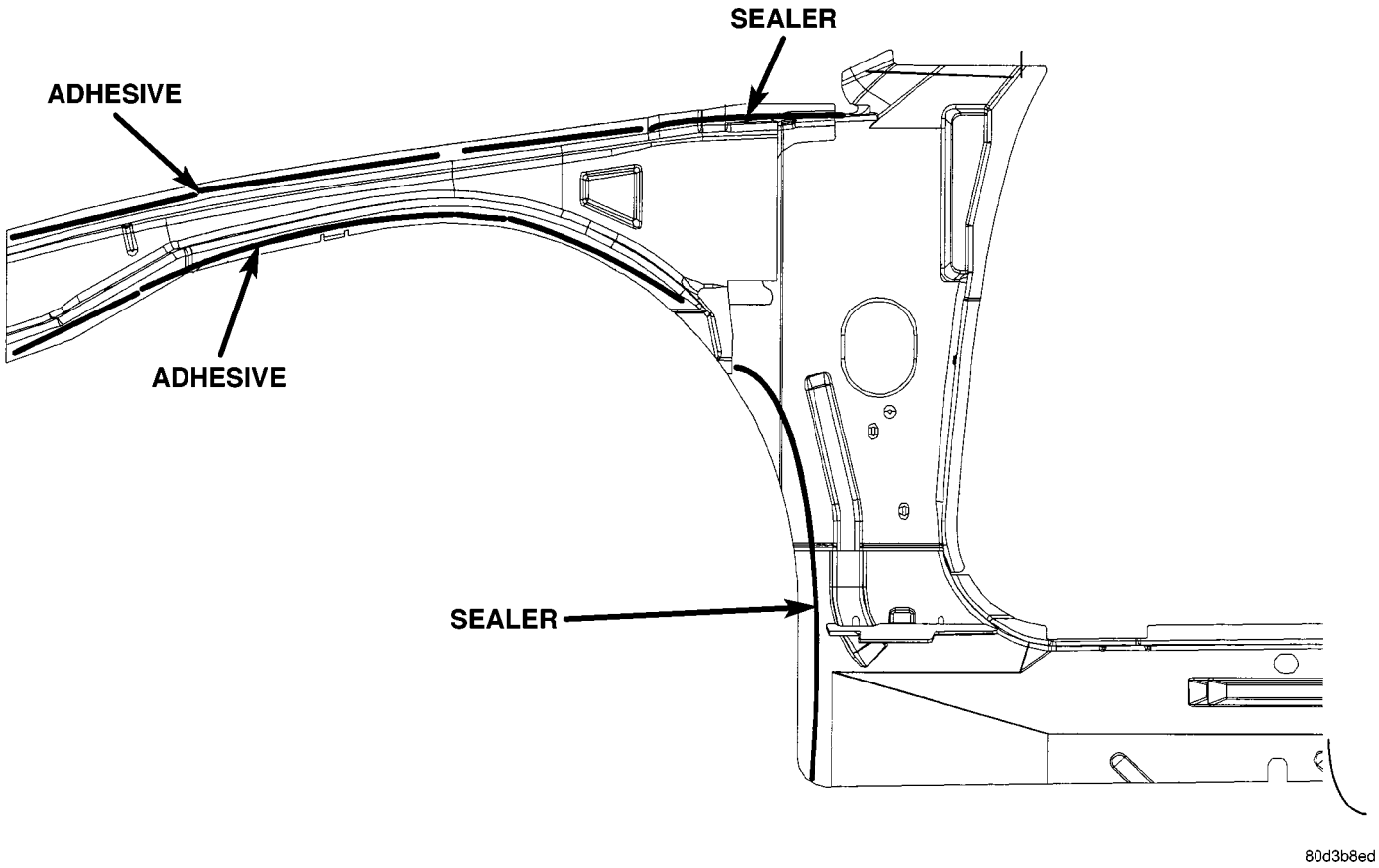

Fig. 39 INNER & OUTER UPPER LOAD PATH BEAM, COWL SIDE PANEL

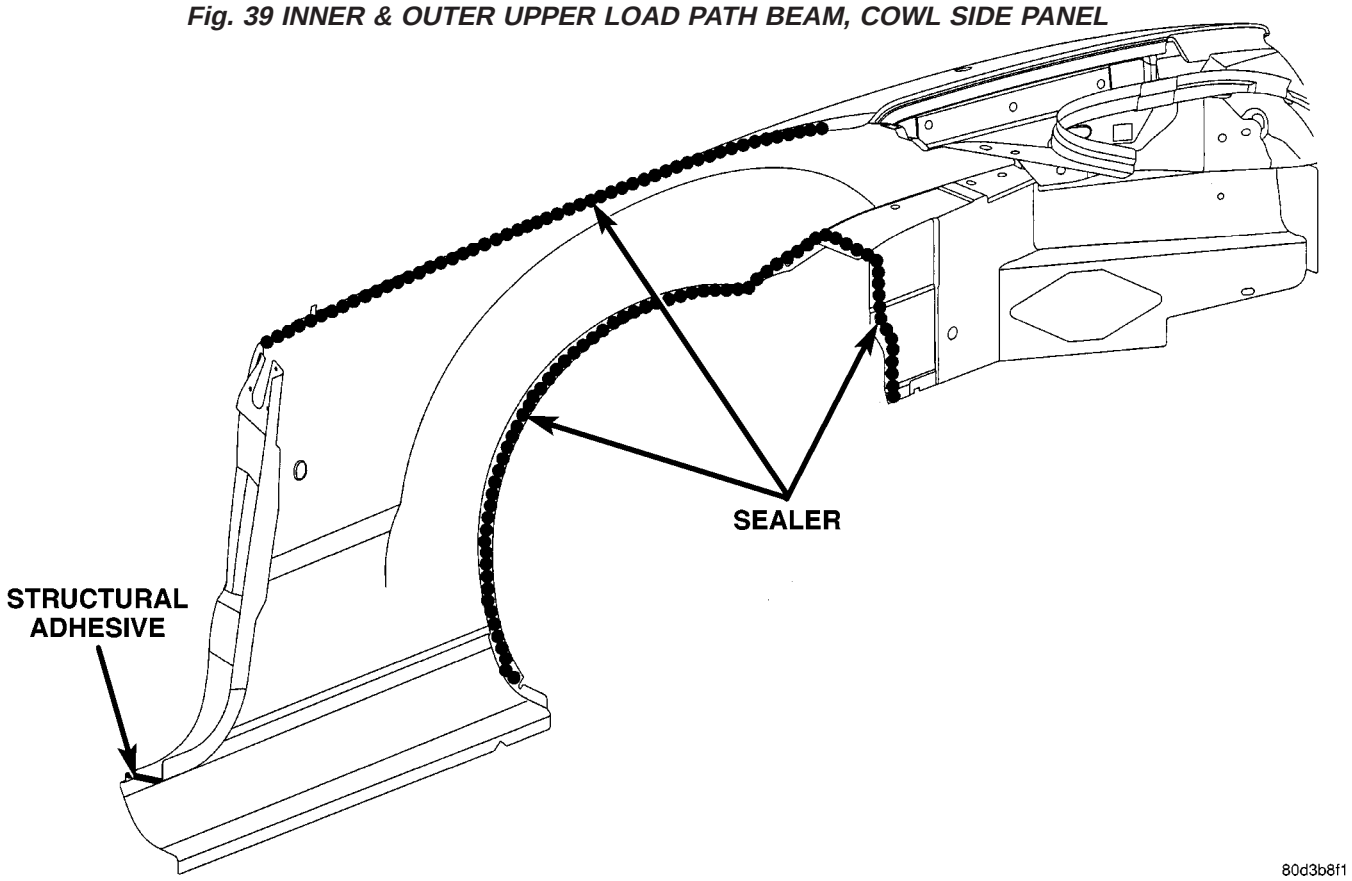

Fig. 40 OUTER QUARTER PANEL

SEALER LOCATIONS (Continued)

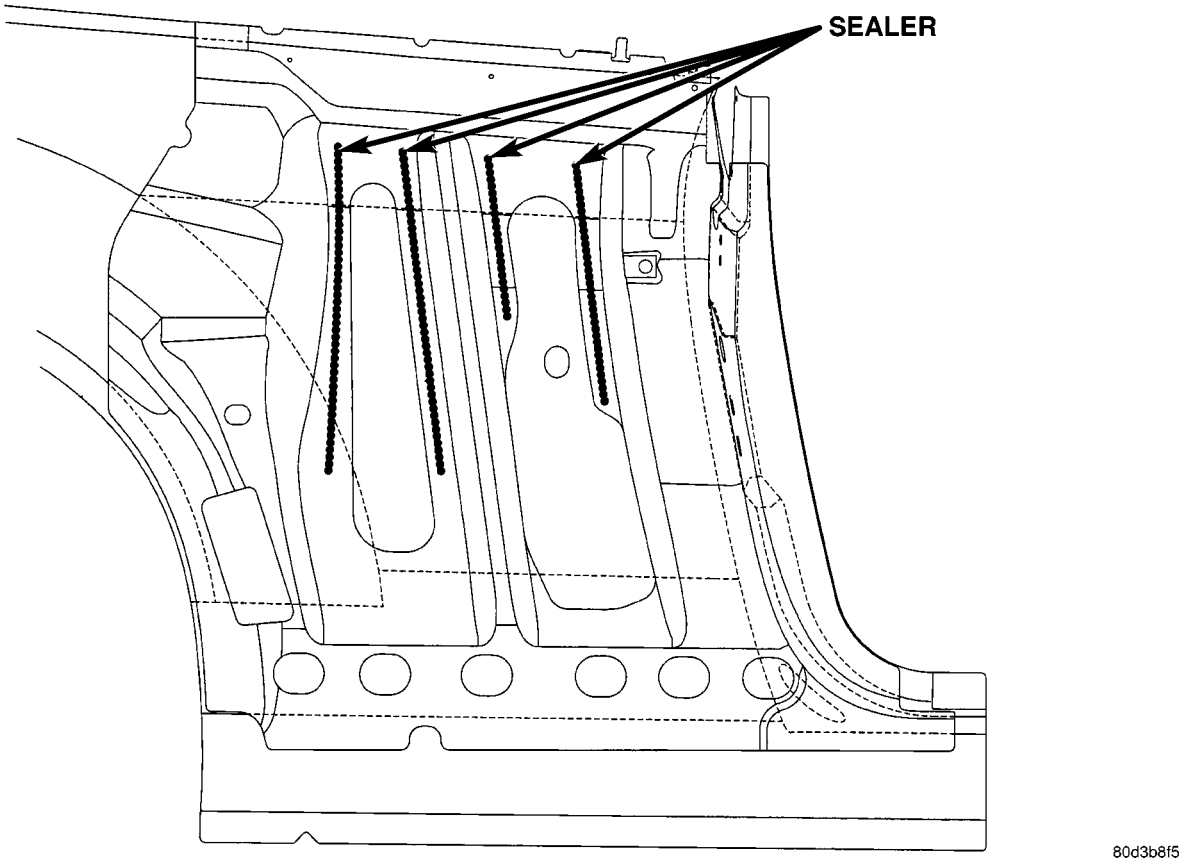

Fig. 41 OUTER QUARTER PANEL & SHELF ASSEMBLY

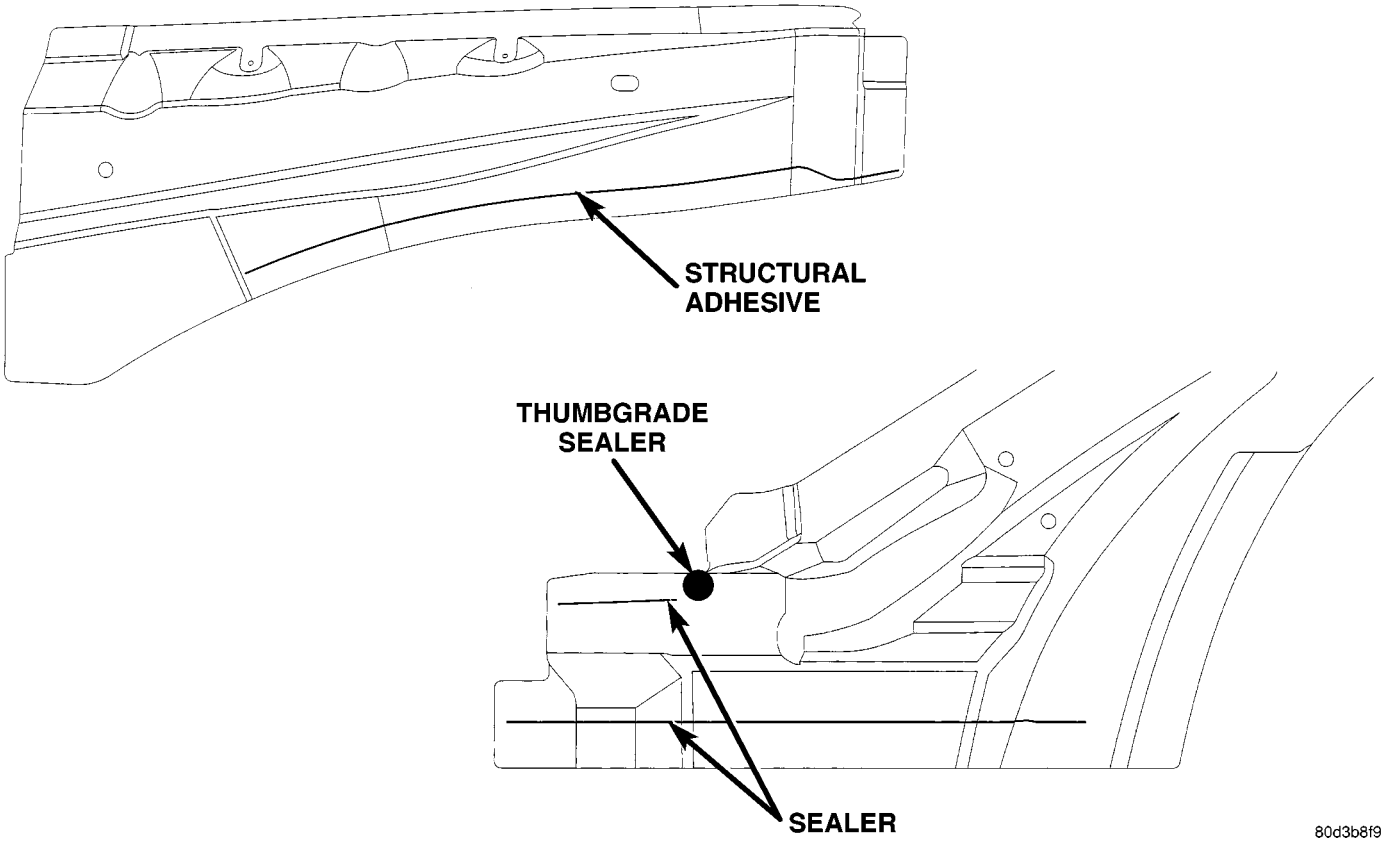

Fig. 42 BODY SIDE APERTURE - INNER

SEALER LOCATIONS (Continued)

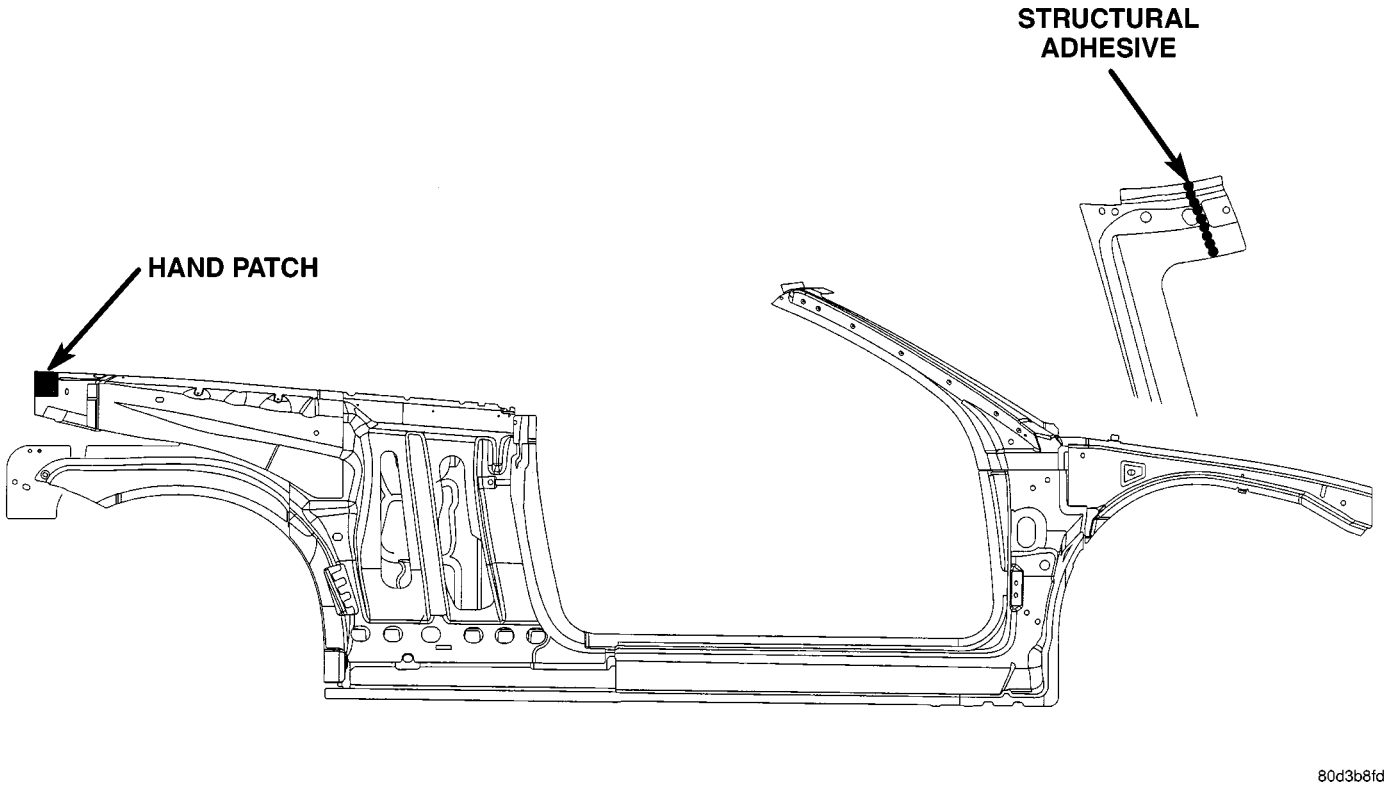

Fig. 43 INNER BODY SIDE APERTURE

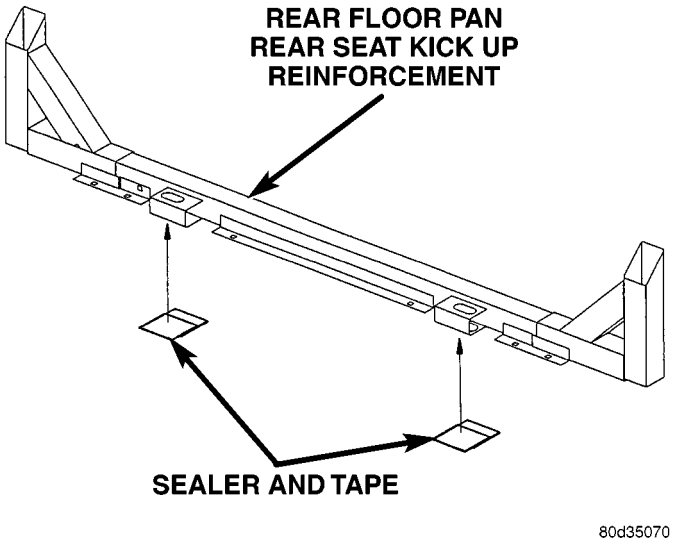

Fig. 44 BAFFLES SEAL & TAPE

SEALER LOCATIONS (Continued)

SPECIFICATIONS - SEALER LOCATIONS - JR-41 ONLY

INDEX

DESCRIPTION	FIGURE
SILL INNER EXTENSION TO REAR FLOOR PAN	45
INNER BODY SILL TO FRONT FLOOR PAN	46
INNER LOWER DECK OPENING TO TAIL LAMP EXTENSION	47
LOWER DECK OPENING TO REAR FLOOR PAN	48
DASH PANEL TO COWL INNER PANEL	49
SILL INNER EXTENSION TO INNER REAR WHEELHOUSE	50
SHELF PANEL TO INNER BODY SIDE APERTURE	51
INNER REAR WHEELHOUSE TO REAR FLOOR PAN	52
REAR WHEELHOUSE	53
REAR SHOCK TOWER BRACKET	54
LOWER REAR FLOOR PAN TO LOWER DECK OPENING	55
ROOF TO ″A″ PILLAR	56
TAIL LAMP EXTENSION TO QUARTER PANEL & DRAIN THROUGH	57
TAIL LAMP EXTENSION TO LOWER DECKLID PANEL	58
QUARTER PANEL TO DRAIN TROUGH	59
REAR SHELF PANEL REINFORCEMENT TO DRAIN TROUGH	60
ROOF DRIP RAIL SEAL SUPPORT	61
QUARTER DRIP RAIL SEAL SUPPORT	62
QUARTER PANEL TO BODY SIDE APERTURE DOOR FRAME JOINT	63
QUARTER PANEL TO BODY SIDE APERTURE DOG LEG	64
ROOF FLANGE TO QUARTER PANEL FLANGE	65
FRONT DOOR LOWER HEM FLANGE	66
REAR DOOR LOWER HEM FLANGE	67
DECKLID HEM FLANGE	68
FRONT FLOOR PAN TO REAR FLOOR PAN	69
INNER UPPER LOAD BEAM & COWL SIDE PANEL	70
WINDSHIELD OPENING SIDE FRAME & BODY SIDE APERTURE	71
OUTER UPPER LOAD BEAM & BODY SIDE APERTURE	72
COWL SIDE PANEL, BODY SIDE APERTURE & INNER SIDE SILL	73
ROOF SUPPORT, DRIP RAIL & ROOF PANEL	74

SEALER LOCATIONS (Continued)

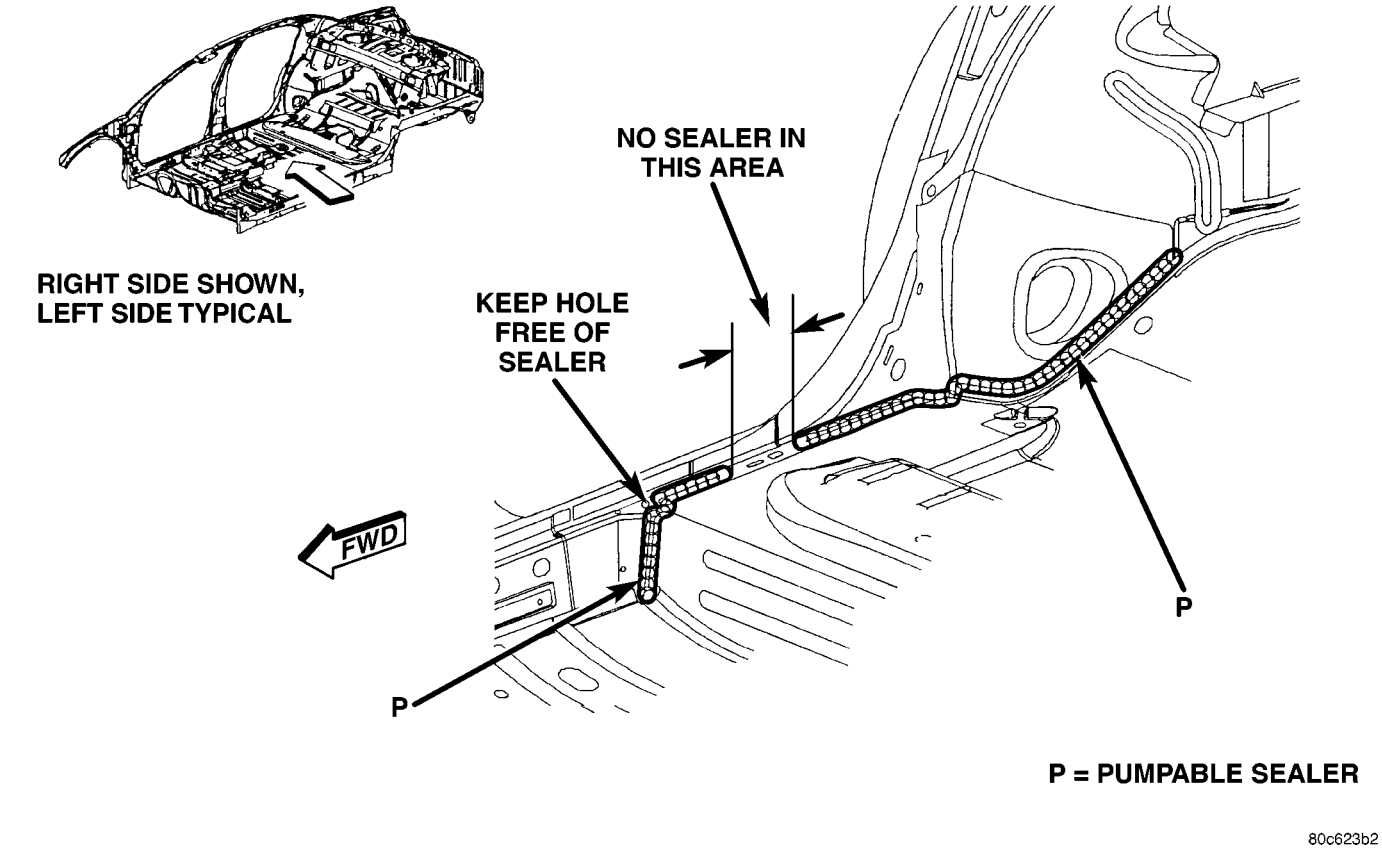

Fig. 45 SILL INNER EXTENSION TO REAR FLOOR PAN

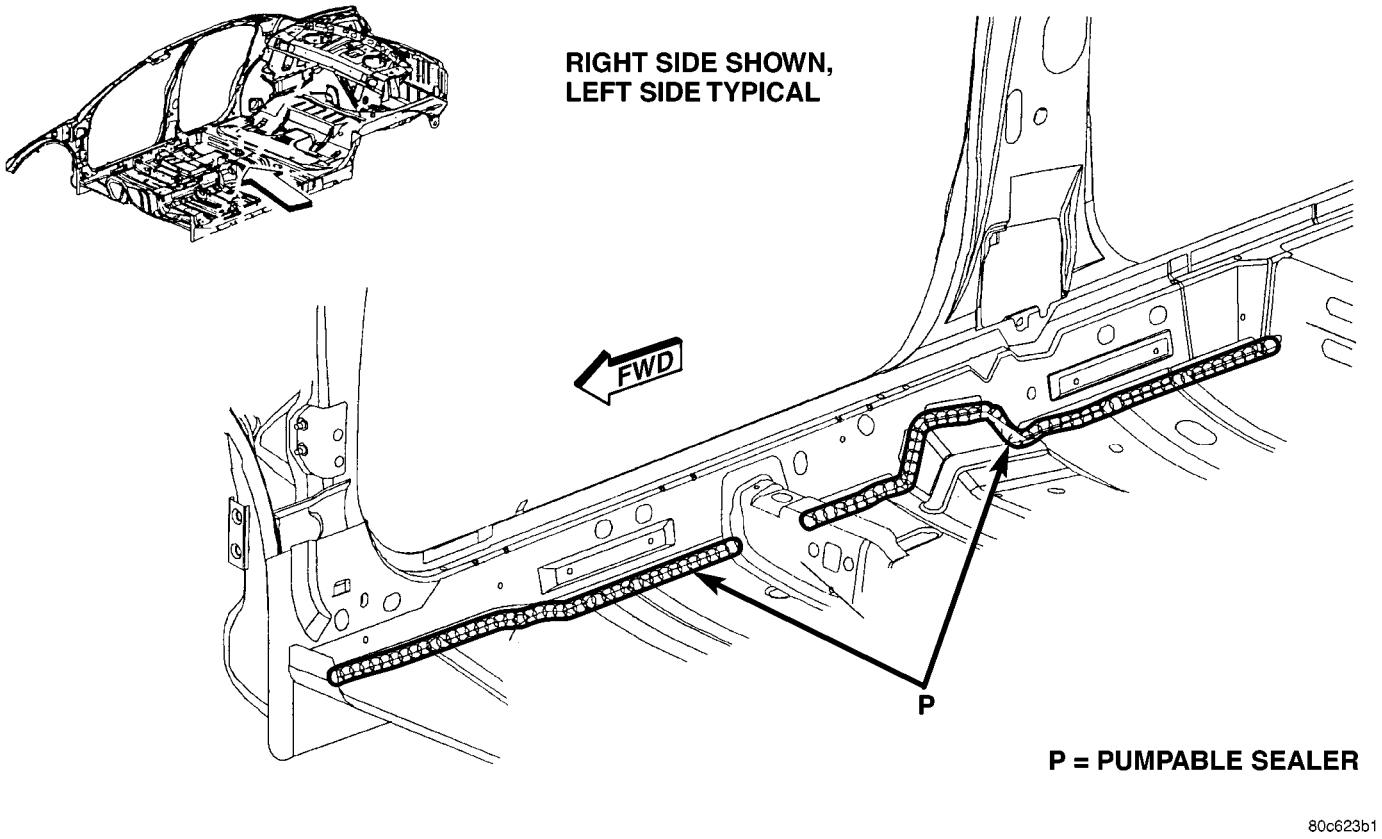

Fig. 46 INNER BODY SILL TO FRONT FLOOR PAN

SEALER LOCATIONS (Continued)

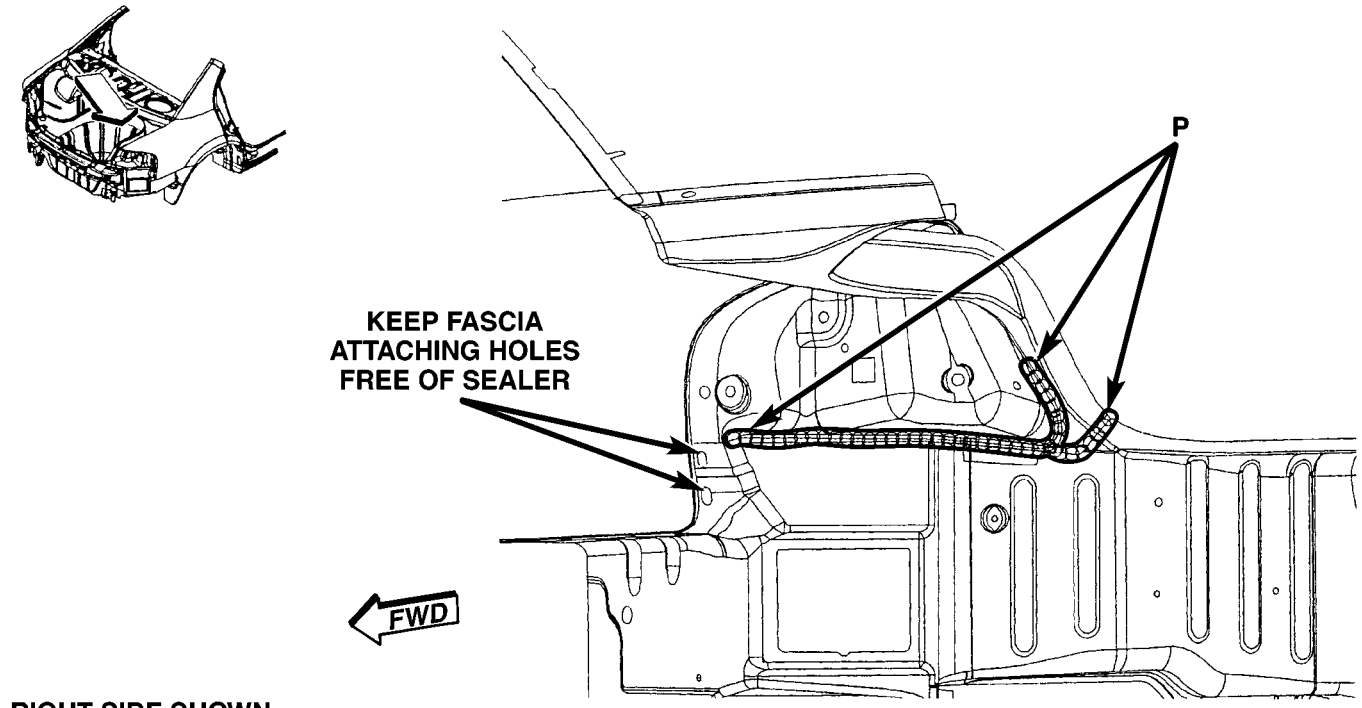

RIGHT SIDE SHOWN,
LEFT SIDE TYPICAL

P = PUMPABLE SEALER

80c623b0

Fig. 47 INNER LOWER DECK OPENING TO TAIL LAMP EXTENSION

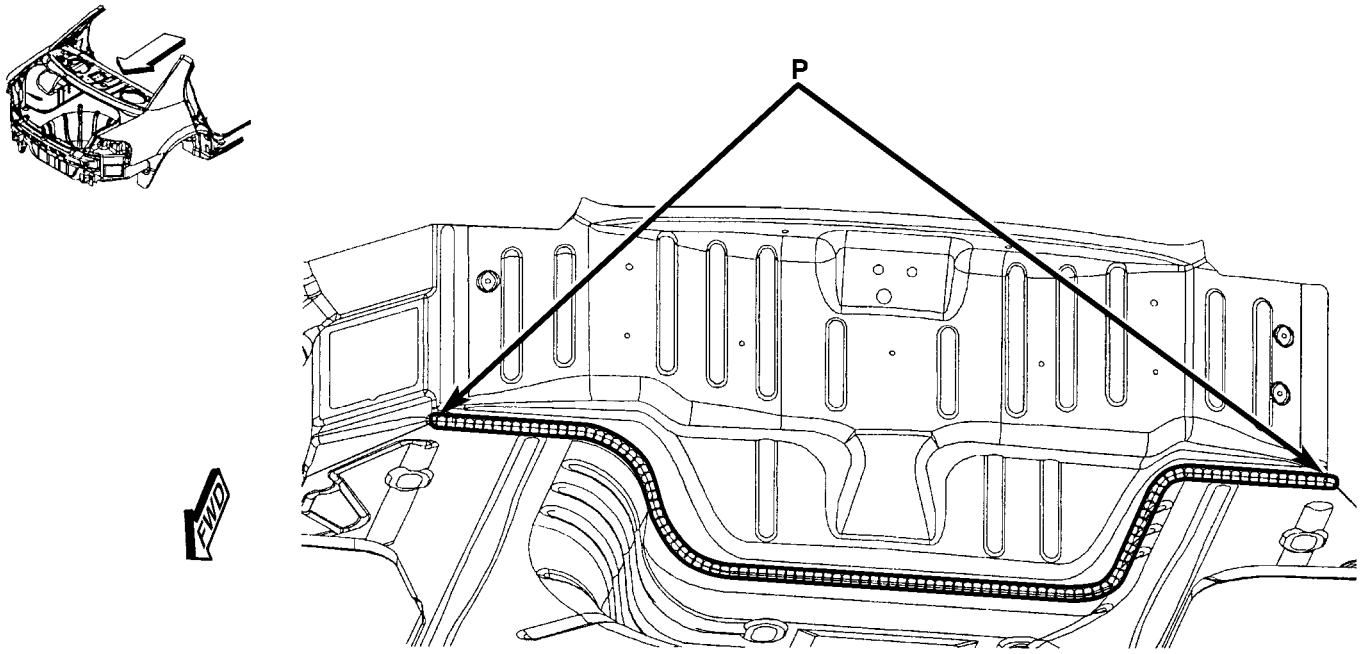

P = PUMPABLE SEALER

80c623af

Fig. 48 LOWER DECK OPENING TO REAR FLOOR PAN

SEALER LOCATIONS (Continued)

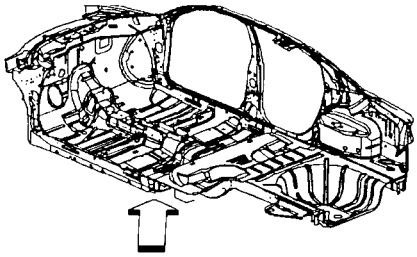

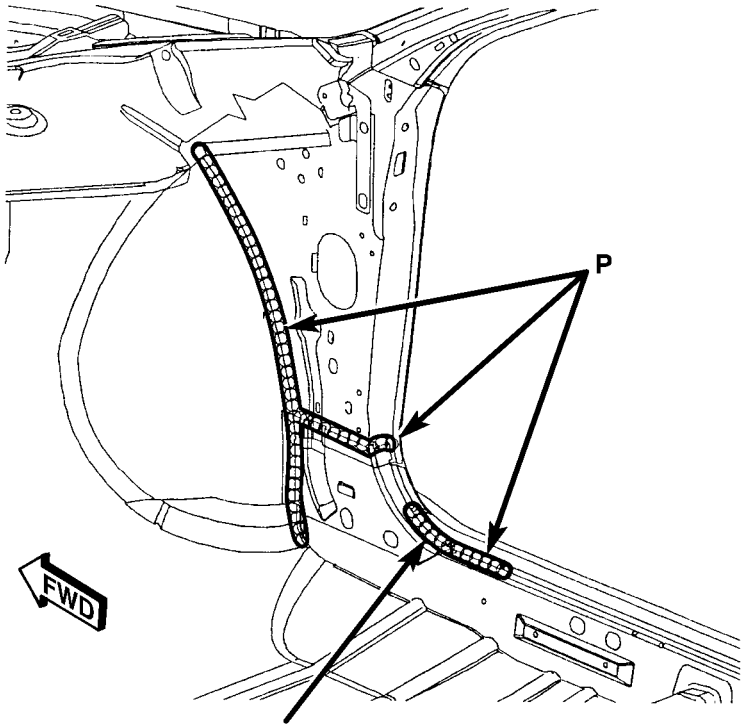

RIGHT SIDE SHOWN,
LEFT SIDE TYPICAL

HAND BRUSH
SEALER THIS AREA

P = PUMPABLE SEALER

80c623ae

Fig. 49 DASH PANEL TO COWL INNER PANEL

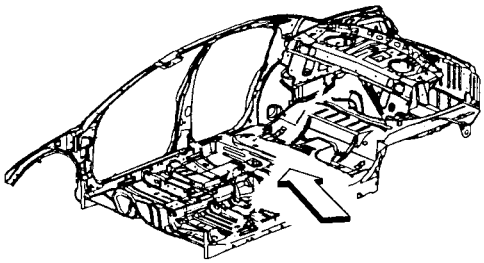

RIGHT SIDE SHOWN,
LEFT SIDE TYPICAL

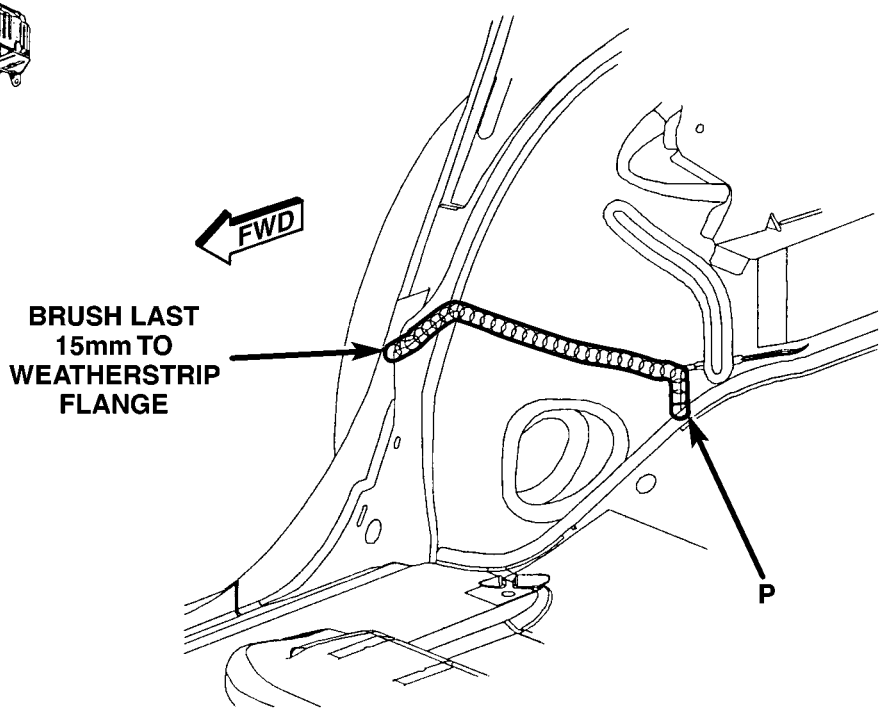

P = PUMPABLE SEALER

80c623b3

Fig. 50 SILL INNER EXTENSION TO INNER REAR WHEELHOUSE

SEALER LOCATIONS (Continued)

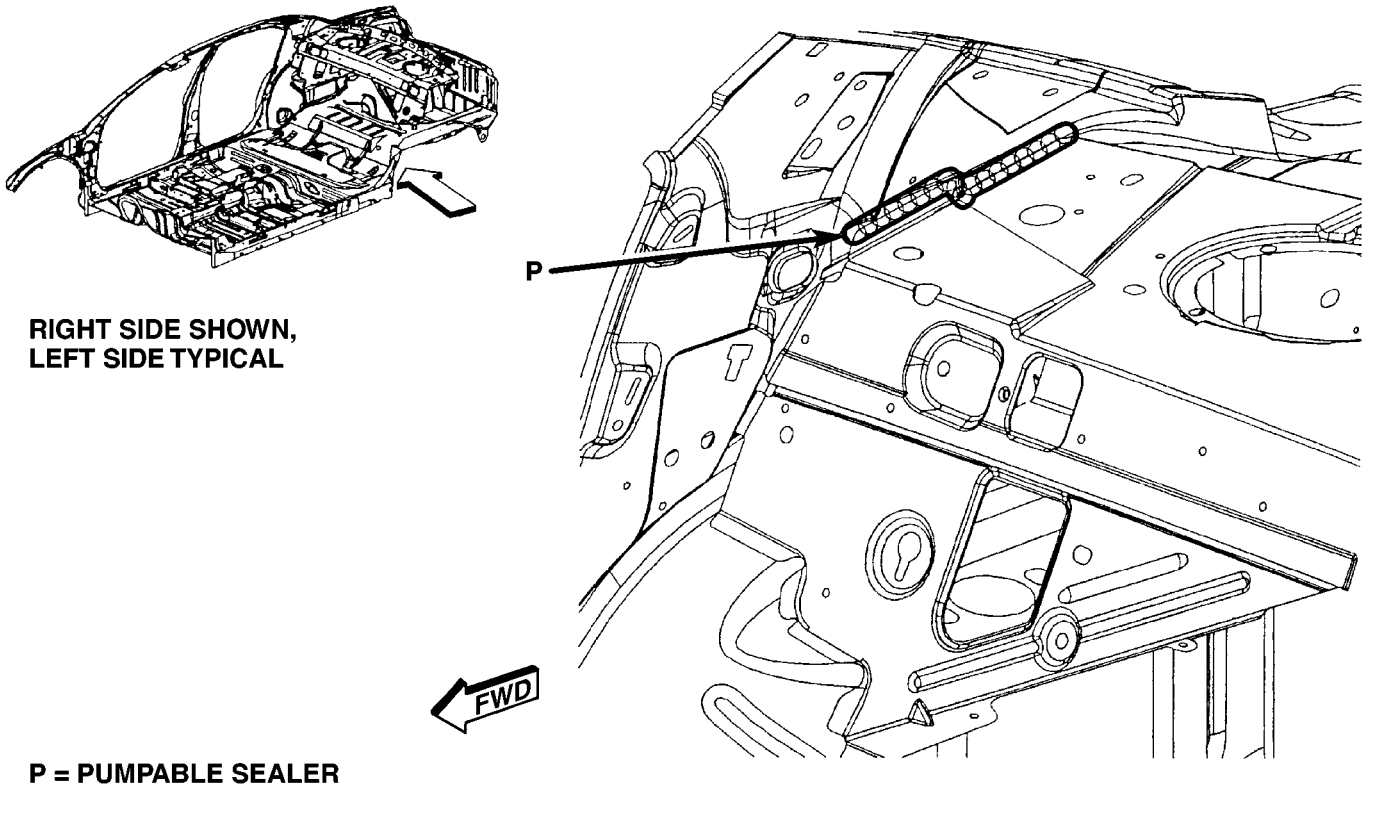

Fig. 51 SHELF PANEL TO INNER BODY SIDE APERTURE

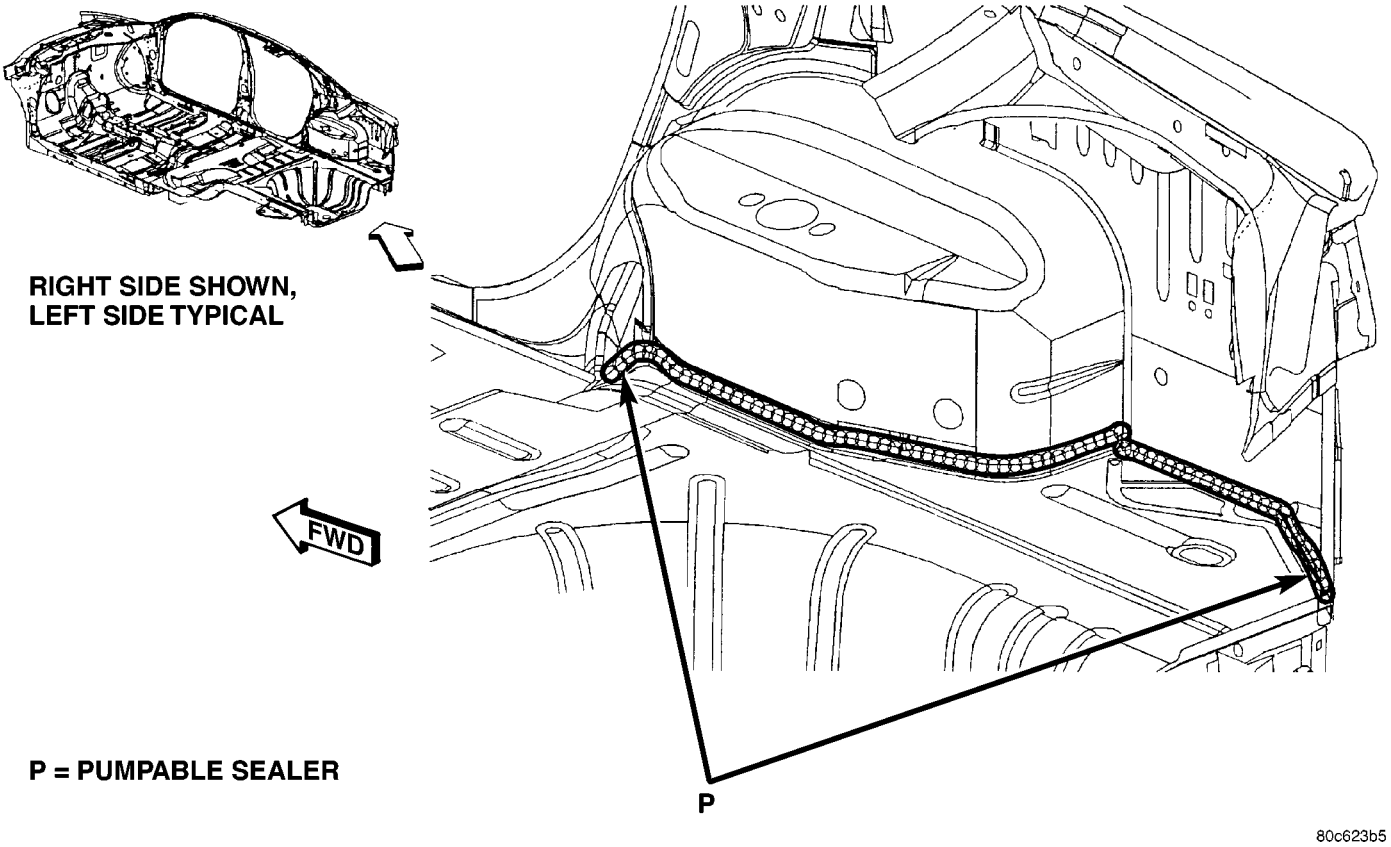

Fig. 52 INNER REAR WHEELHOUSE TO REAR FLOOR PAN

SEALER LOCATIONS (Continued)

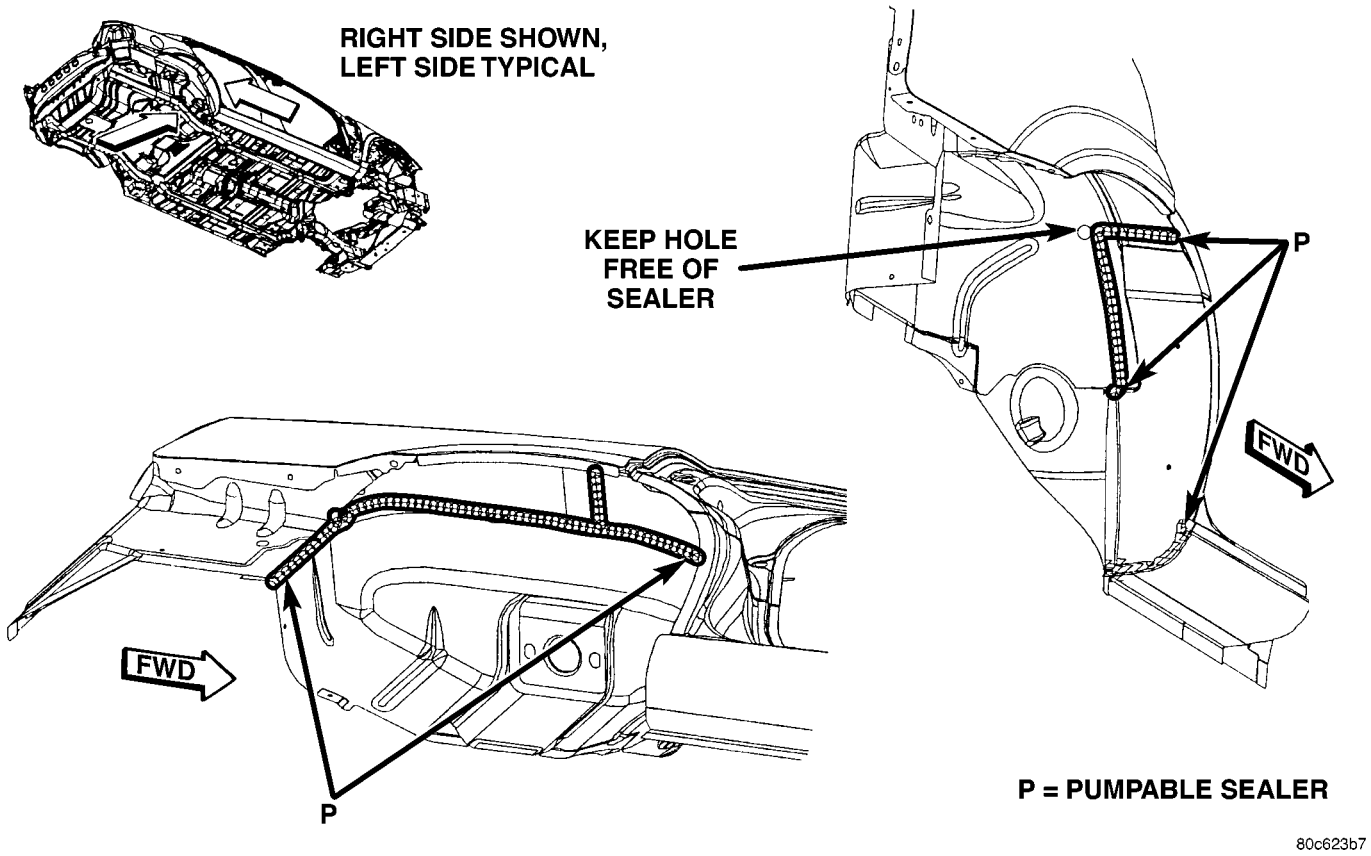

Fig. 53 REAR WHEELHOUSE

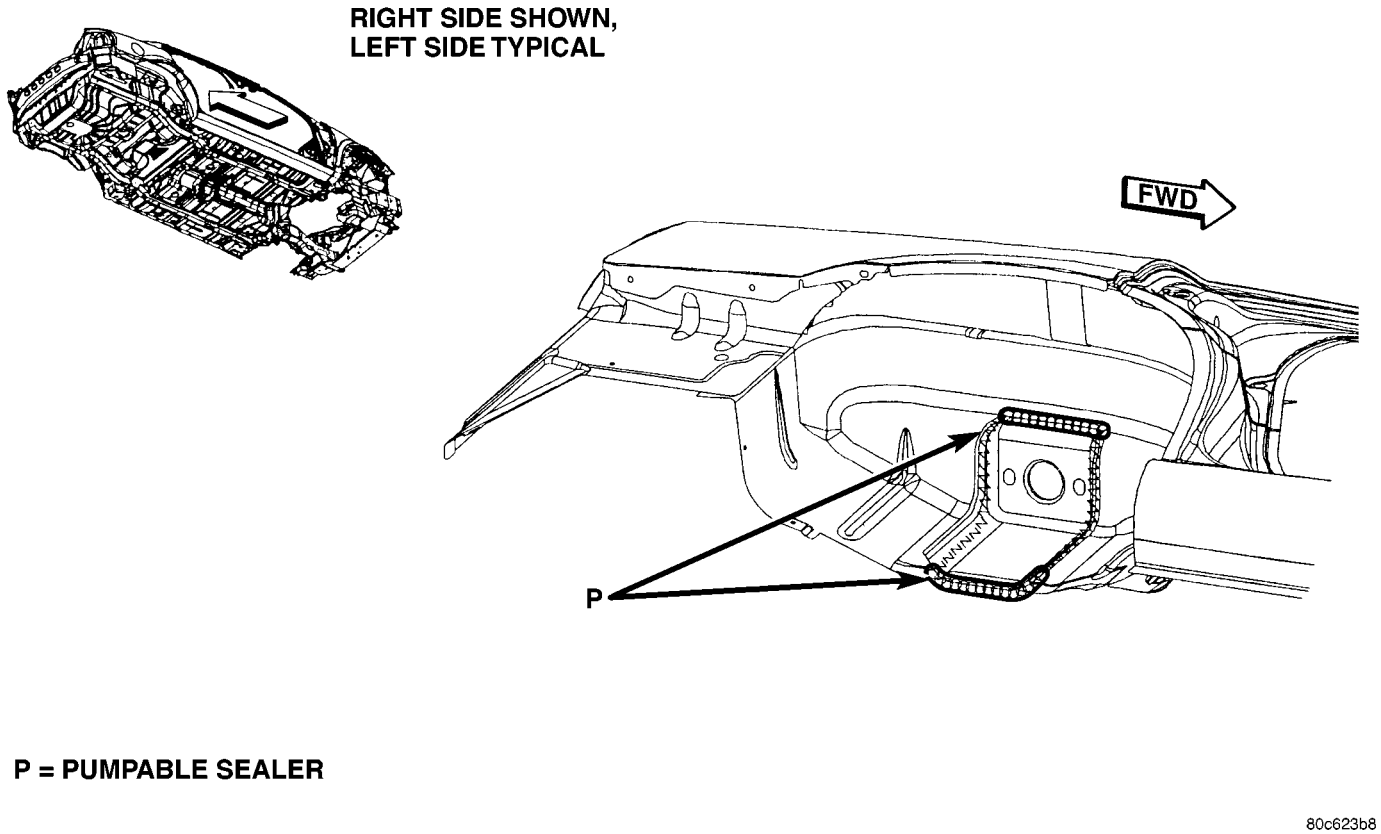

Fig. 54 REAR SHOCK TOWER BRACKET

SEALER LOCATIONS (Continued)

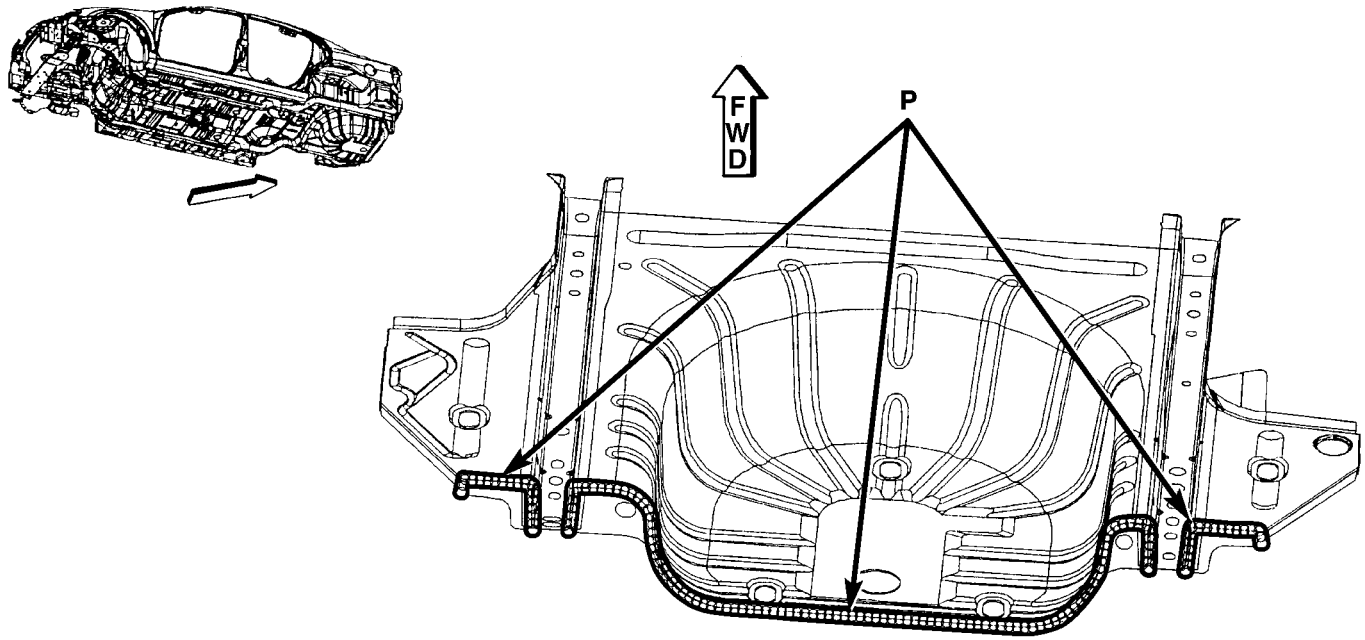

P = PUMPABLE SEALER

80c623b9

Fig. 55 LOWER REAR FLOOR PAN TO LOWER DECK OPENING

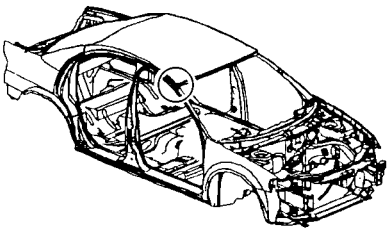

RIGHT SIDE SHOWN,
LEFT SIDE TYPICAL

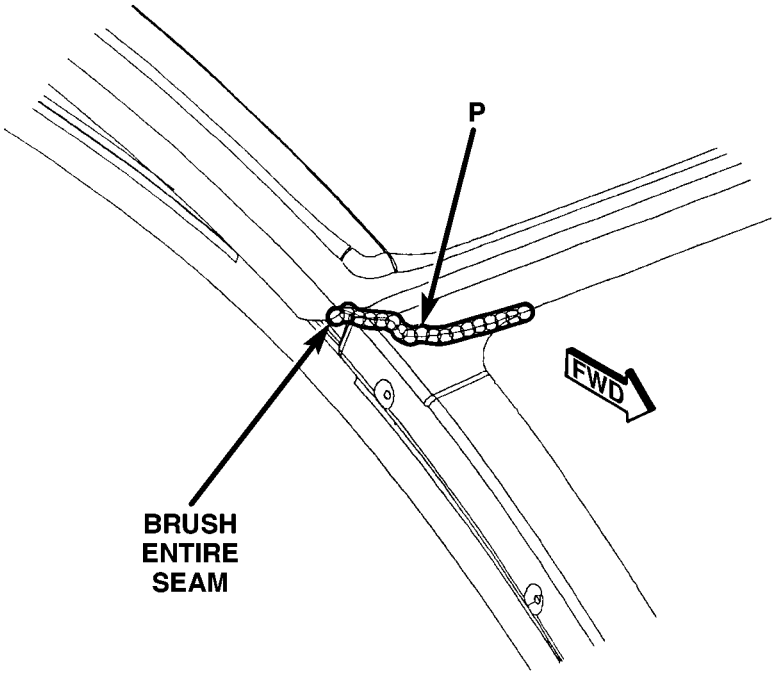

P = PUMPABLE SEALER

80c6239b

Fig. 56 ROOF TO "A" PILLAR

SEALER LOCATIONS (Continued)

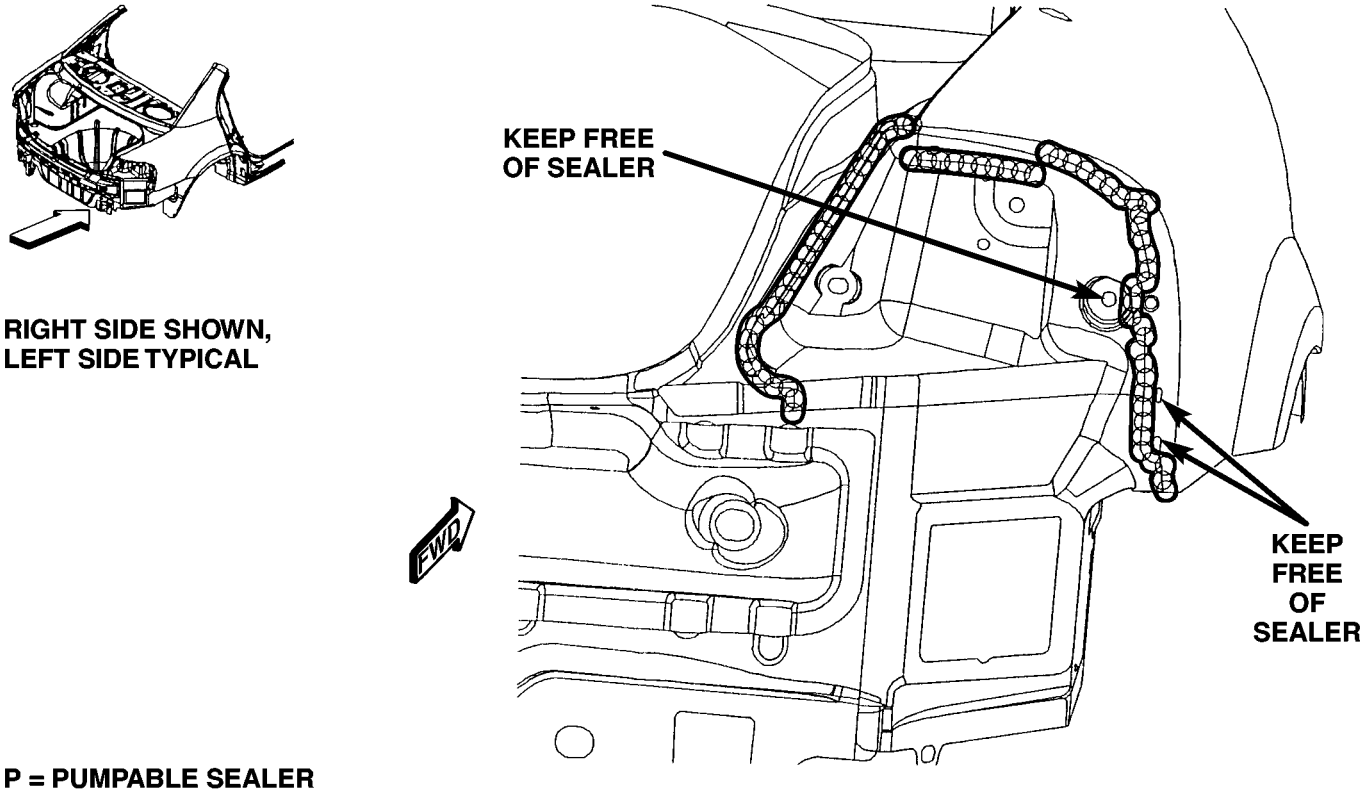

Fig. 57 TAIL LAMP EXTENSION TO QUARTER PANEL & DRAIN THROUGH

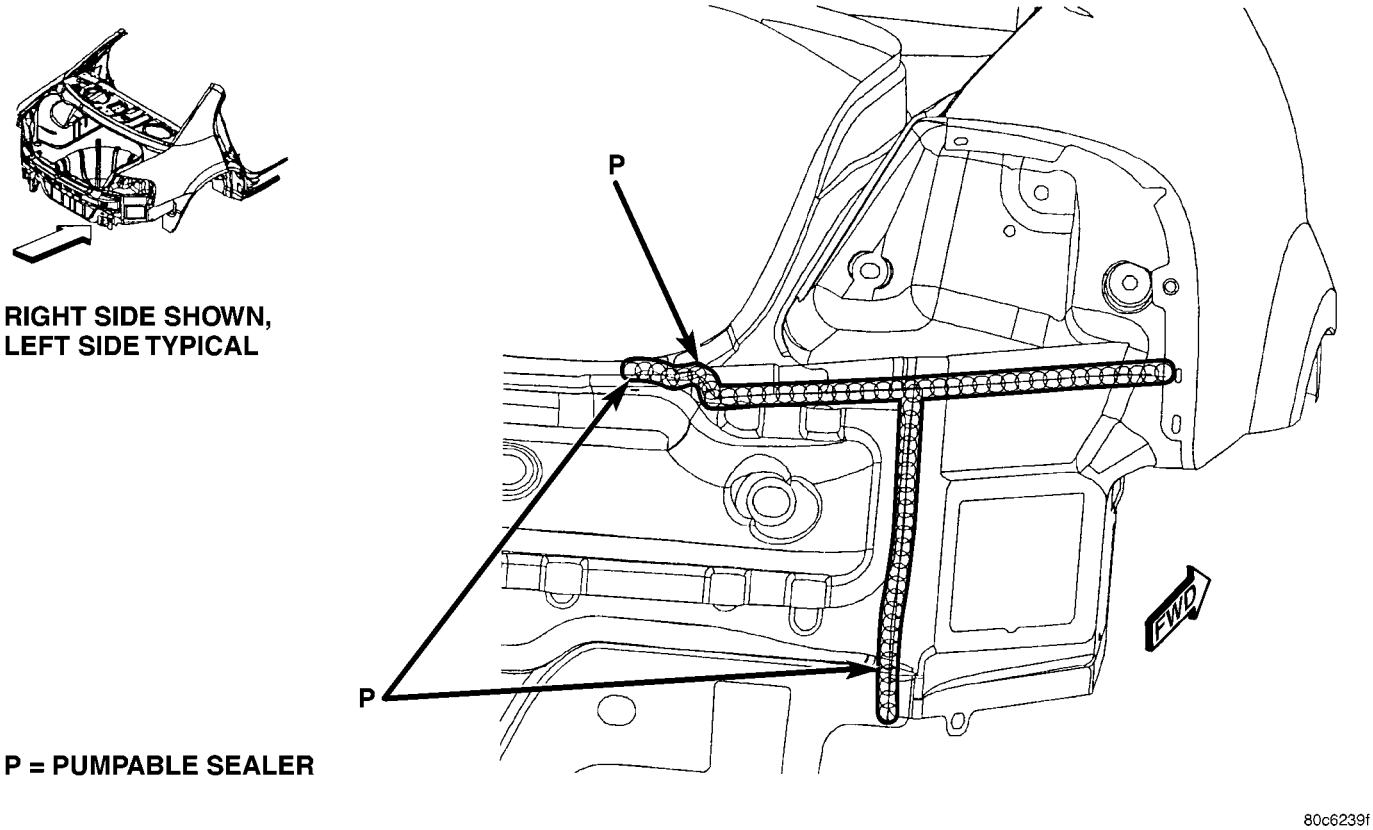

Fig. 58 TAIL LAMP EXTENSION TO LOWER DECKLID PANEL

SEALER LOCATIONS (Continued)

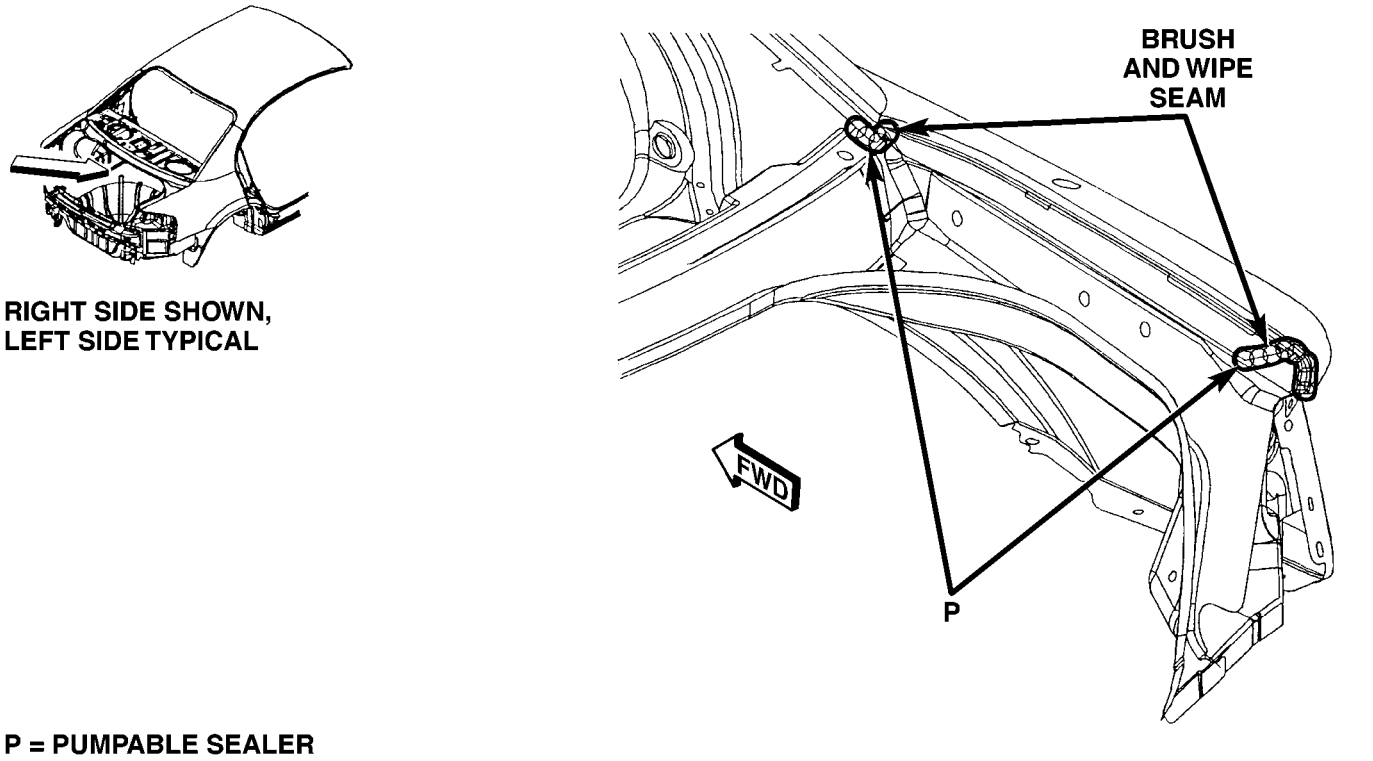

Fig. 59 QUARTER PANEL TO DRAIN TROUGH

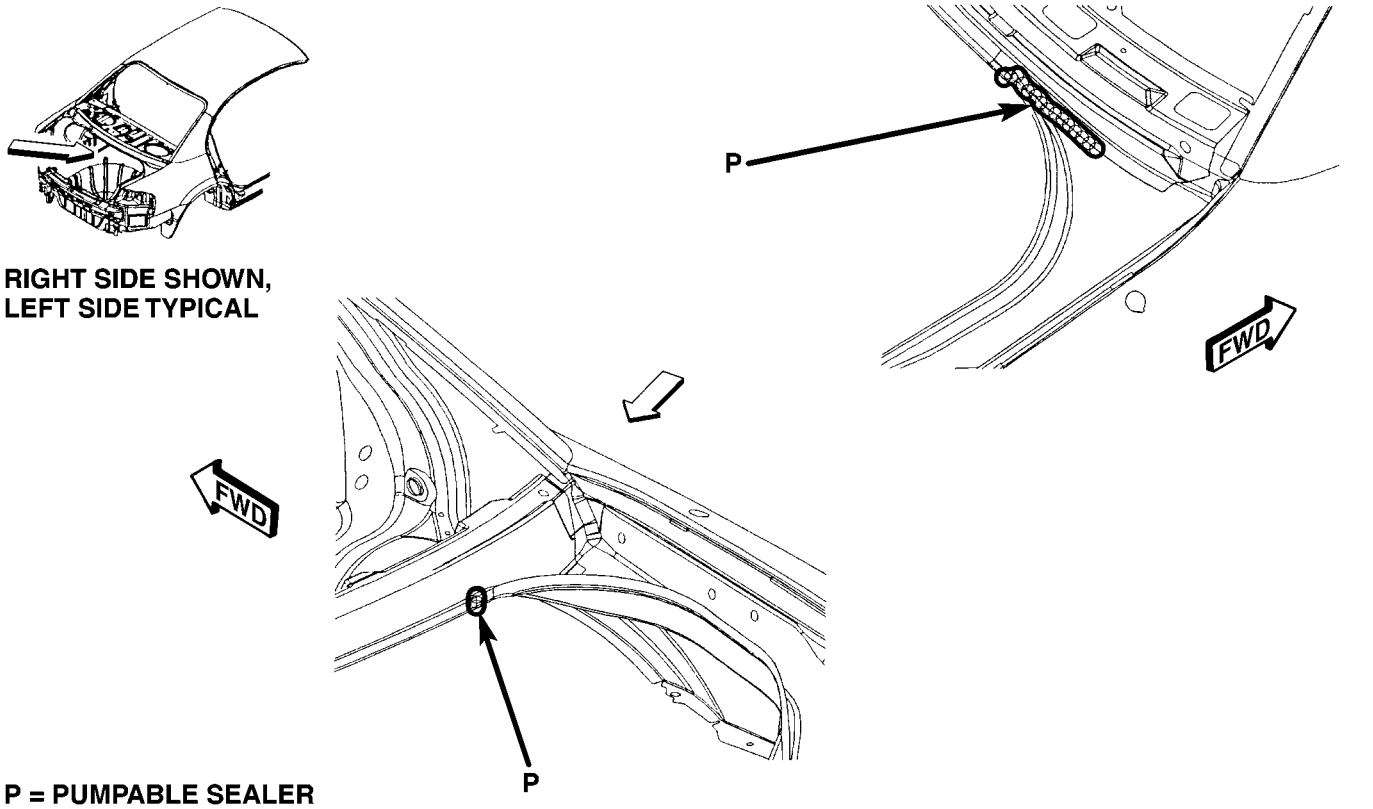

Fig. 60 REAR SHELF PANEL REINFORCEMENT TO DRAIN TROUGH

SEALER LOCATIONS (Continued)

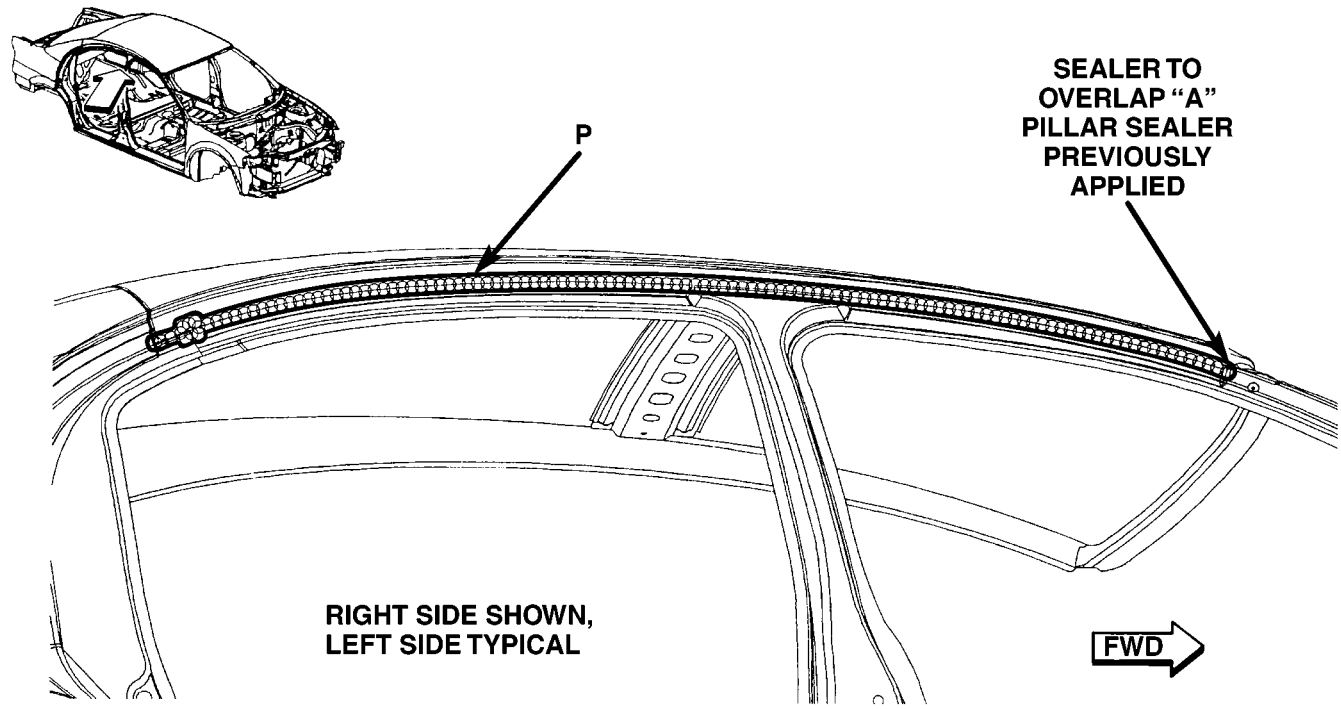

P = PUMPABLE SEALER

80c623a2

Fig. 61 ROOF DRIP RAIL SEAL SUPPORT

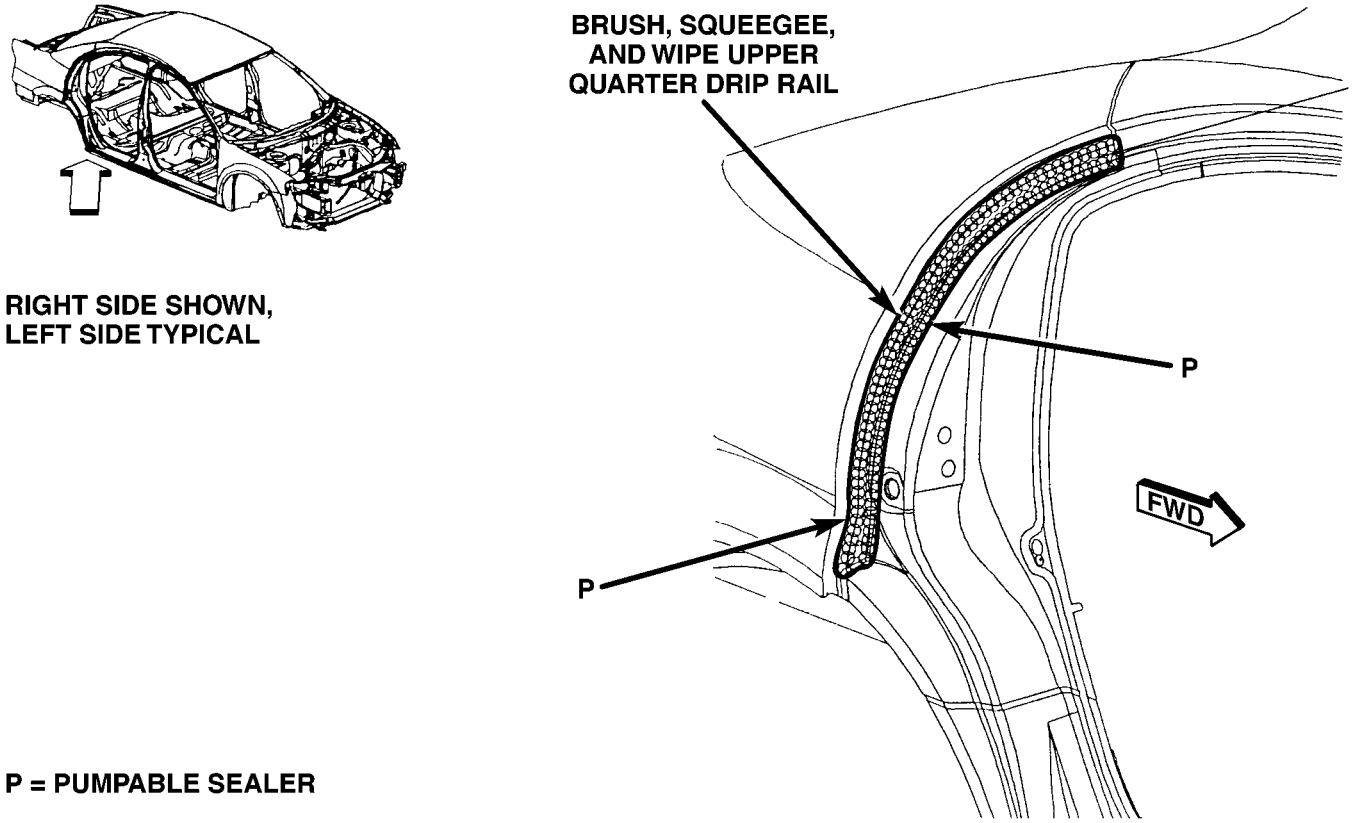

P = PUMPABLE SEALER

80c623a3

Fig. 62 QUARTER DRIP RAIL SEAL SUPPORT

SEALER LOCATIONS (Continued)

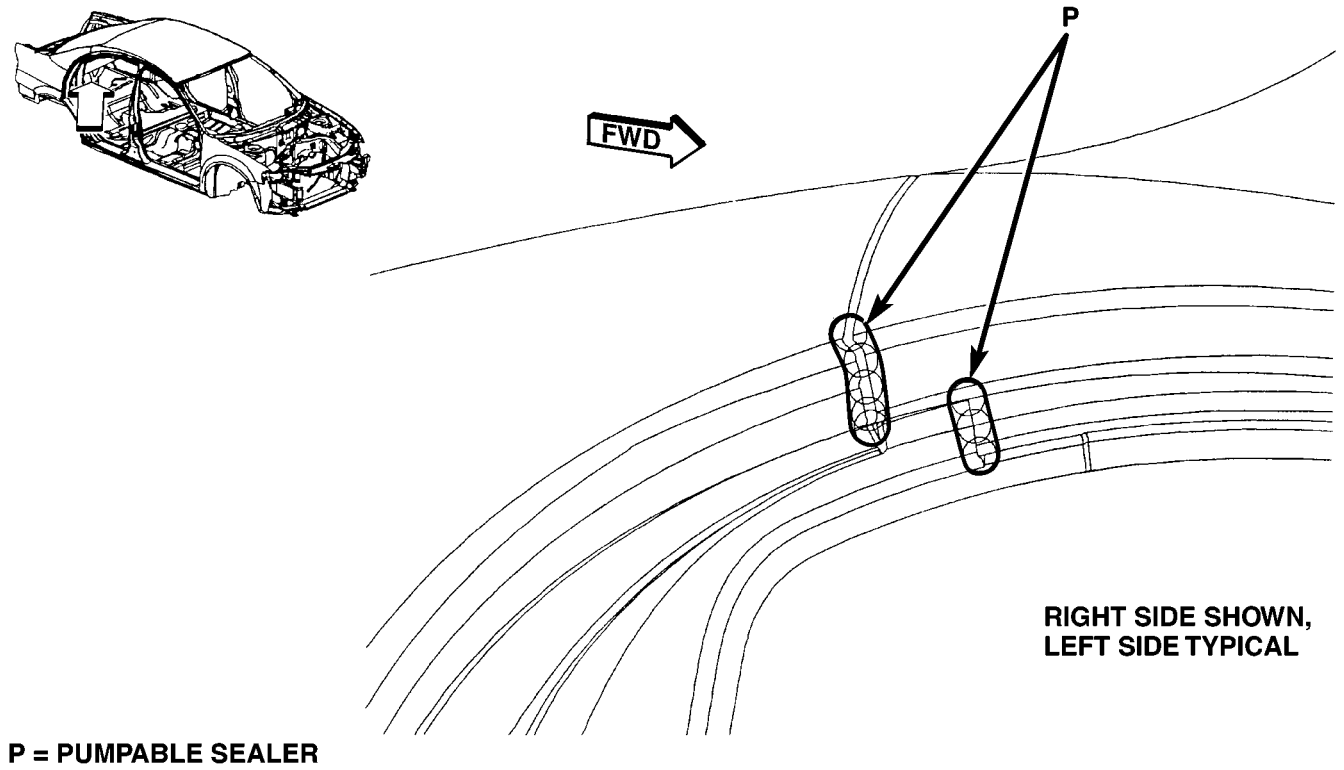

Fig. 63 QUARTER PANEL TO BODY SIDE APERTURE DOOR FRAME JOINT

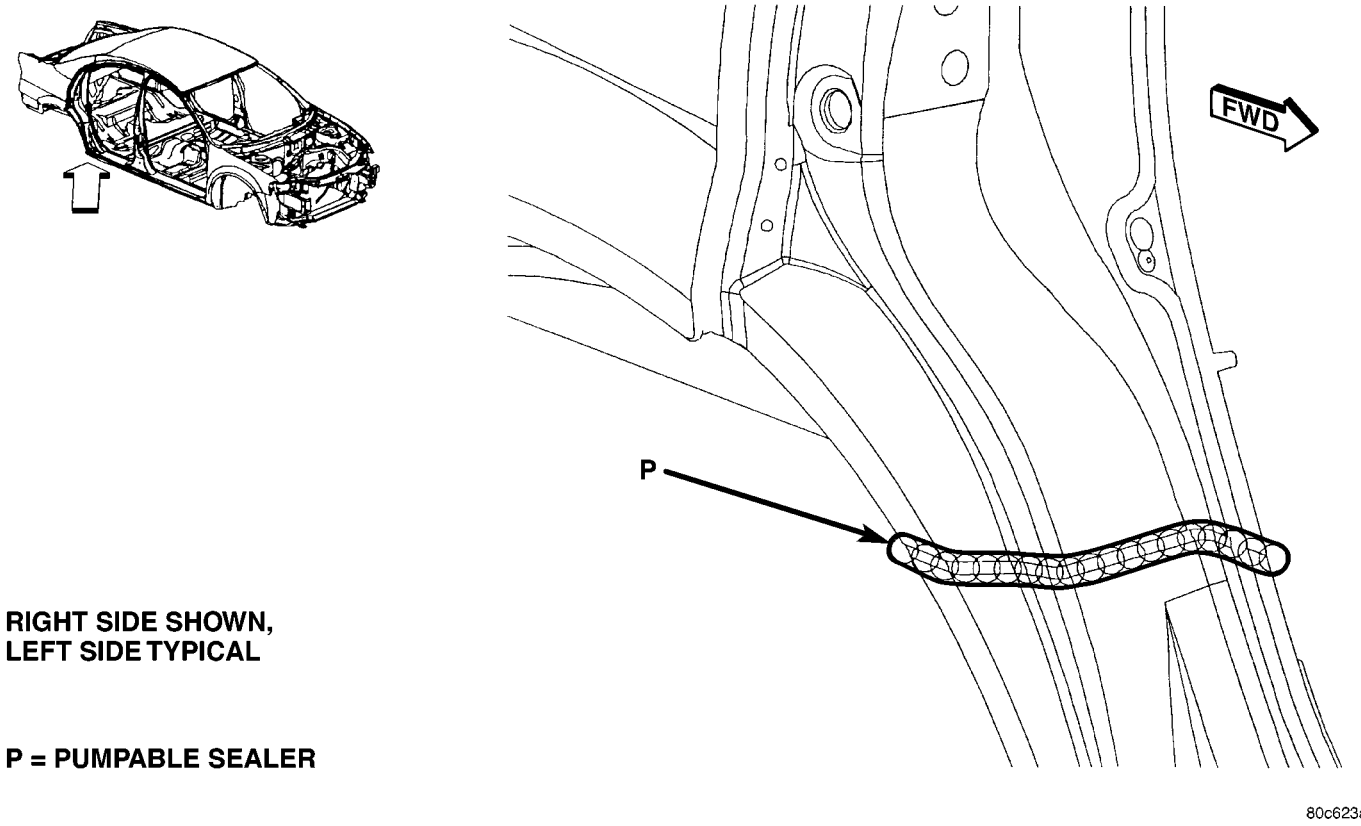

Fig. 64 QUARTER PANEL TO BODY SIDE APERTURE DOG LEG

SEALER LOCATIONS (Continued)

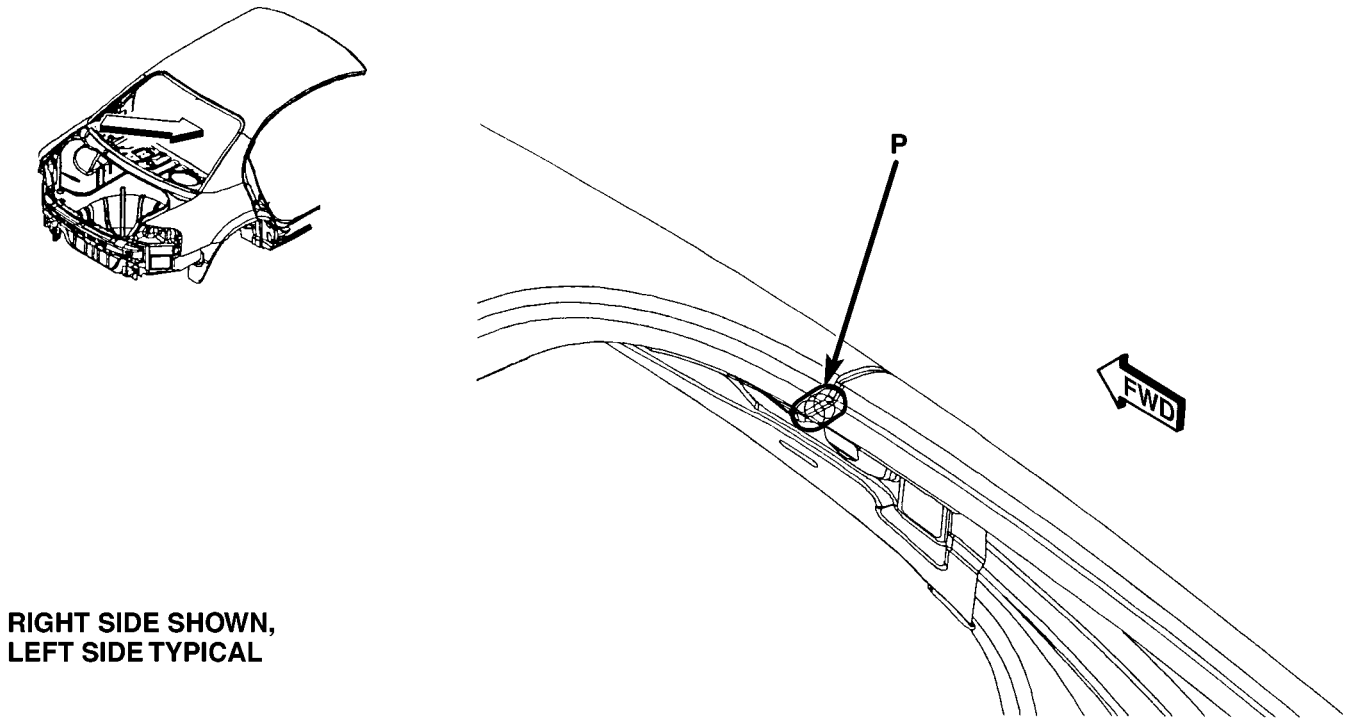

80c623a6

Fig. 65 ROOF FLANGE TO QUARTER PANEL FLANGE

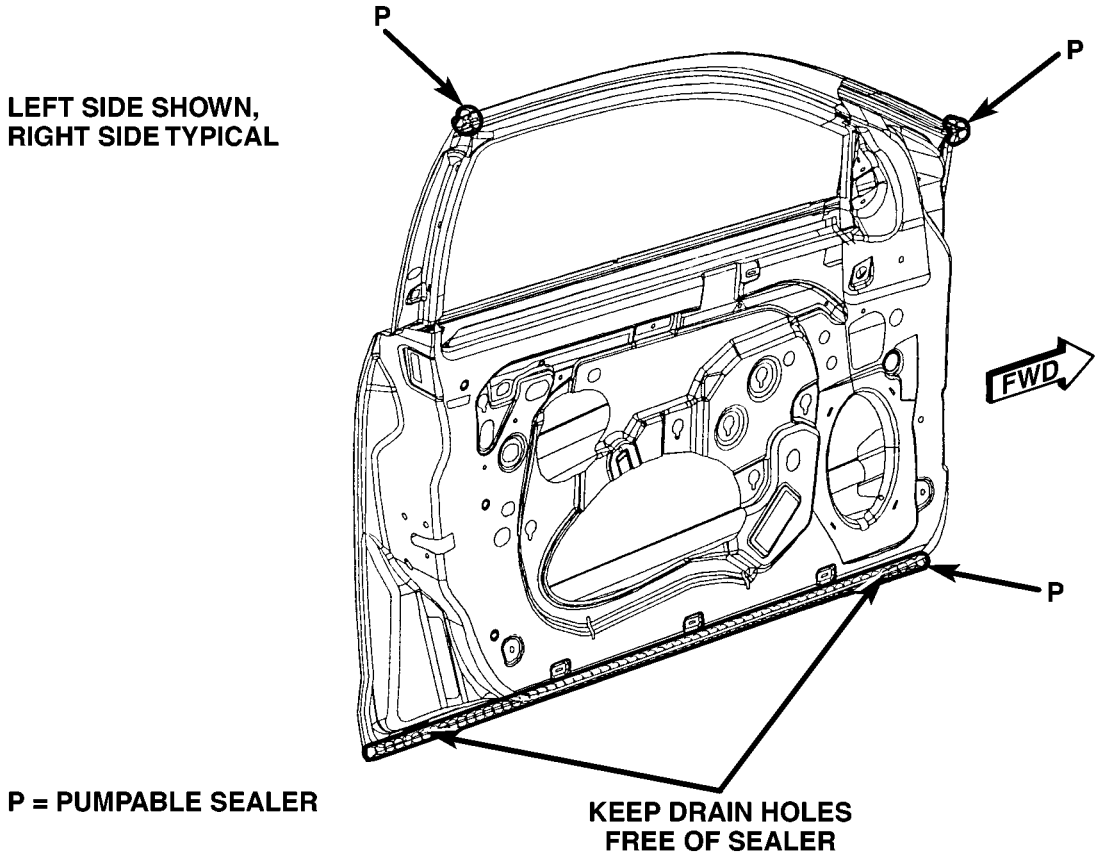

80c623a8

Fig. 66 FRONT DOOR LOWER HEM FLANGE

SEALER LOCATIONS (Continued)

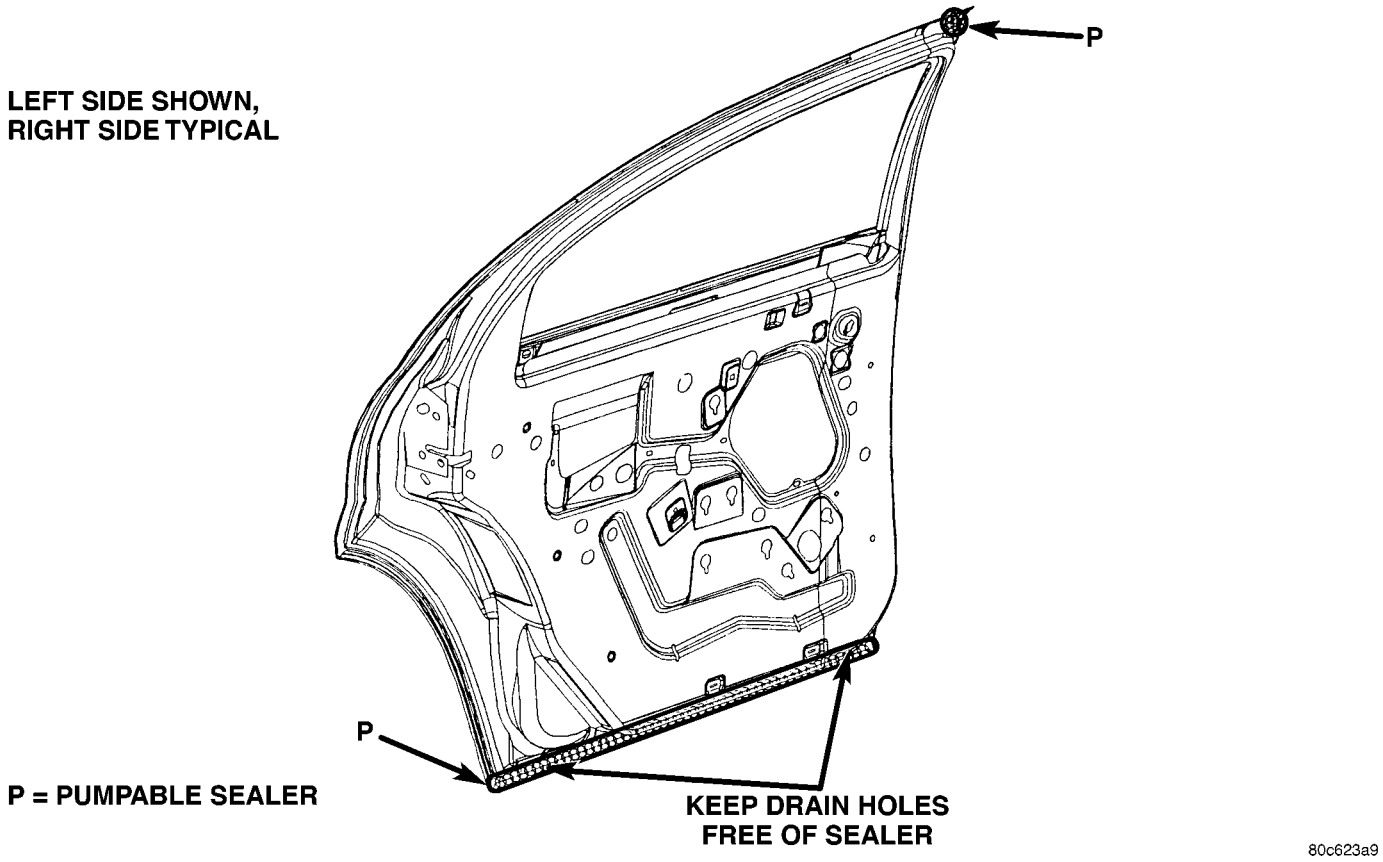

Fig. 67 REAR DOOR LOWER HEM FLANGE

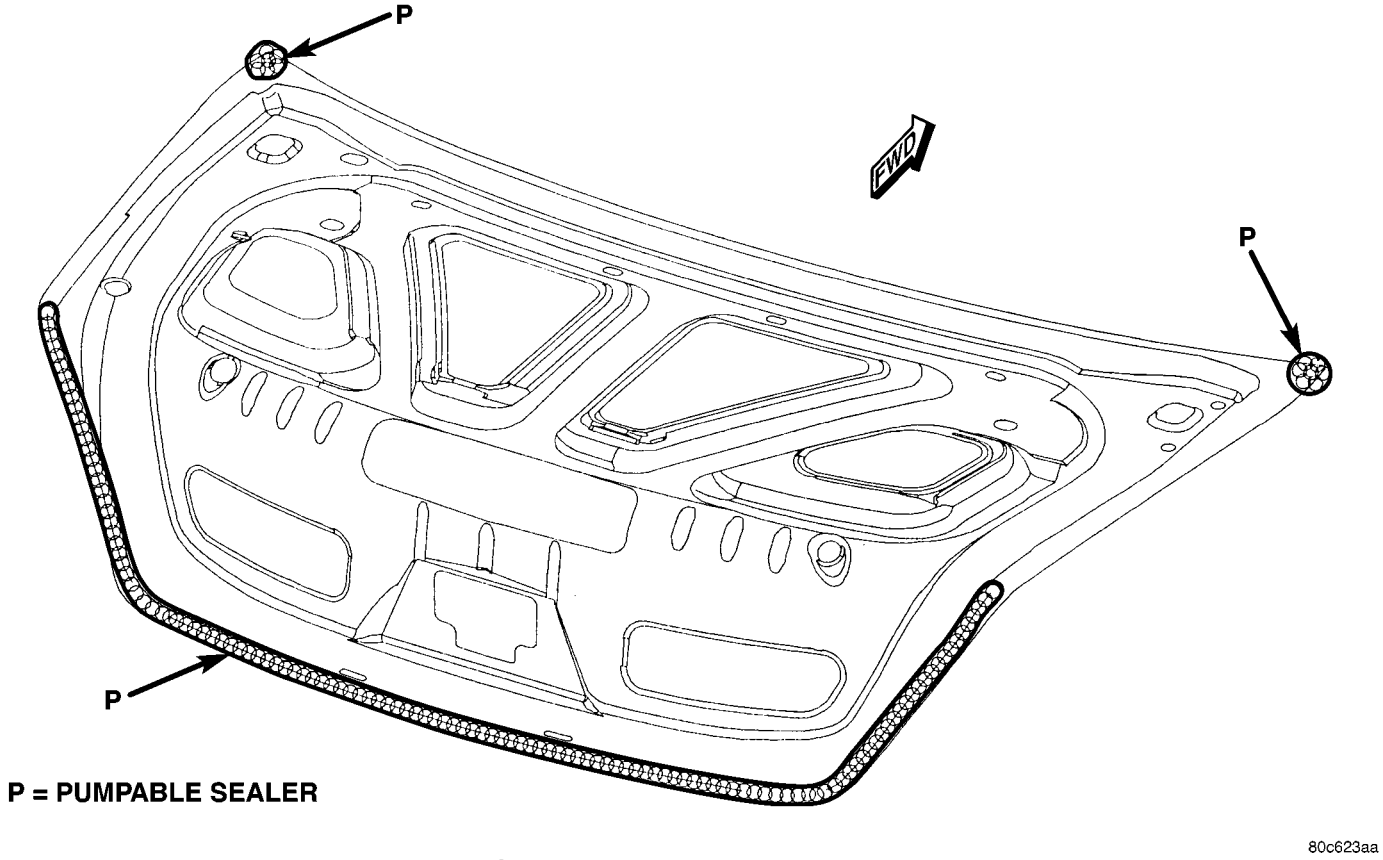

Fig. 68 DECKLID HEM FLANGE

SEALER LOCATIONS (Continued)

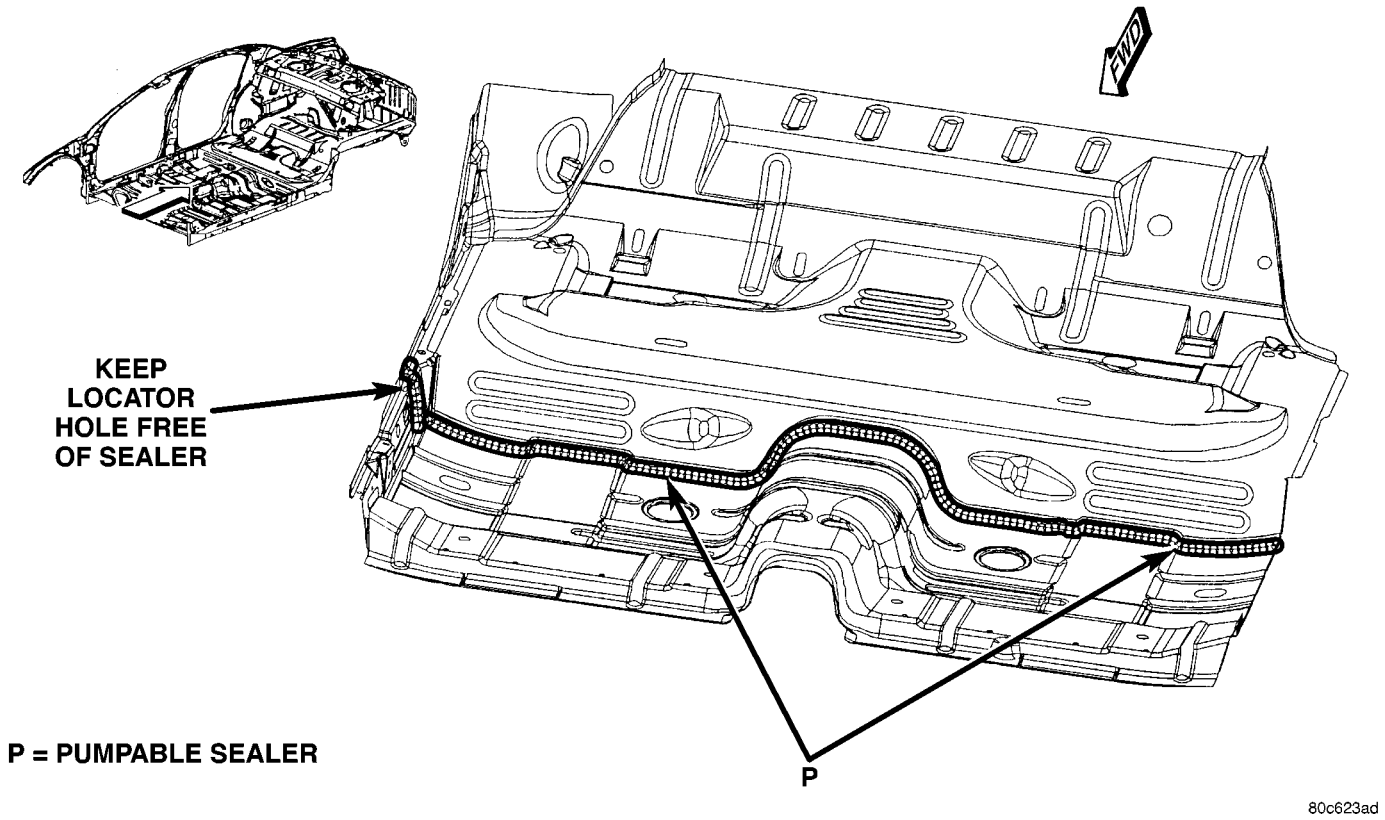

Fig. 69 FRONT FLOOR PAN TO REAR FLOOR PAN

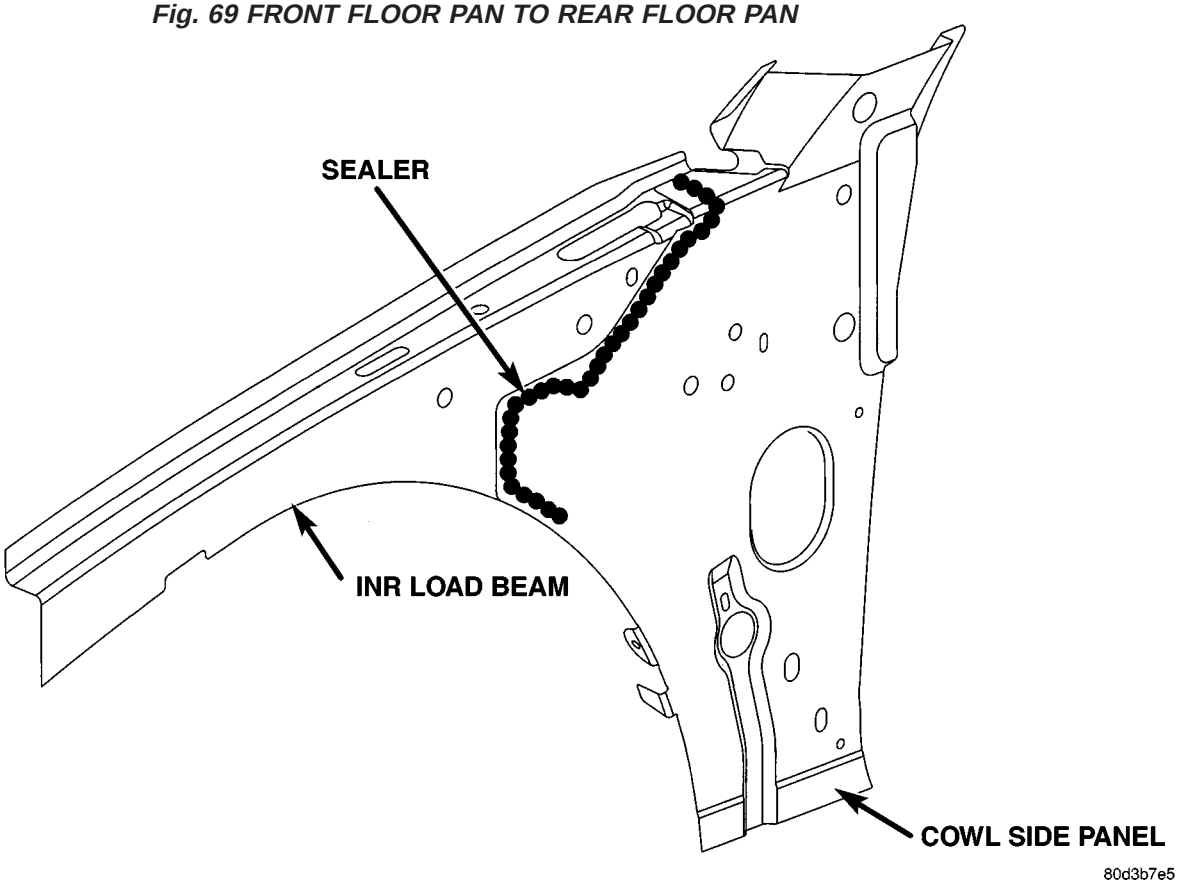

Fig. 70 INNER UPPER LOAD BEAM & COWL SIDE PANEL

SEALER LOCATIONS (Continued)

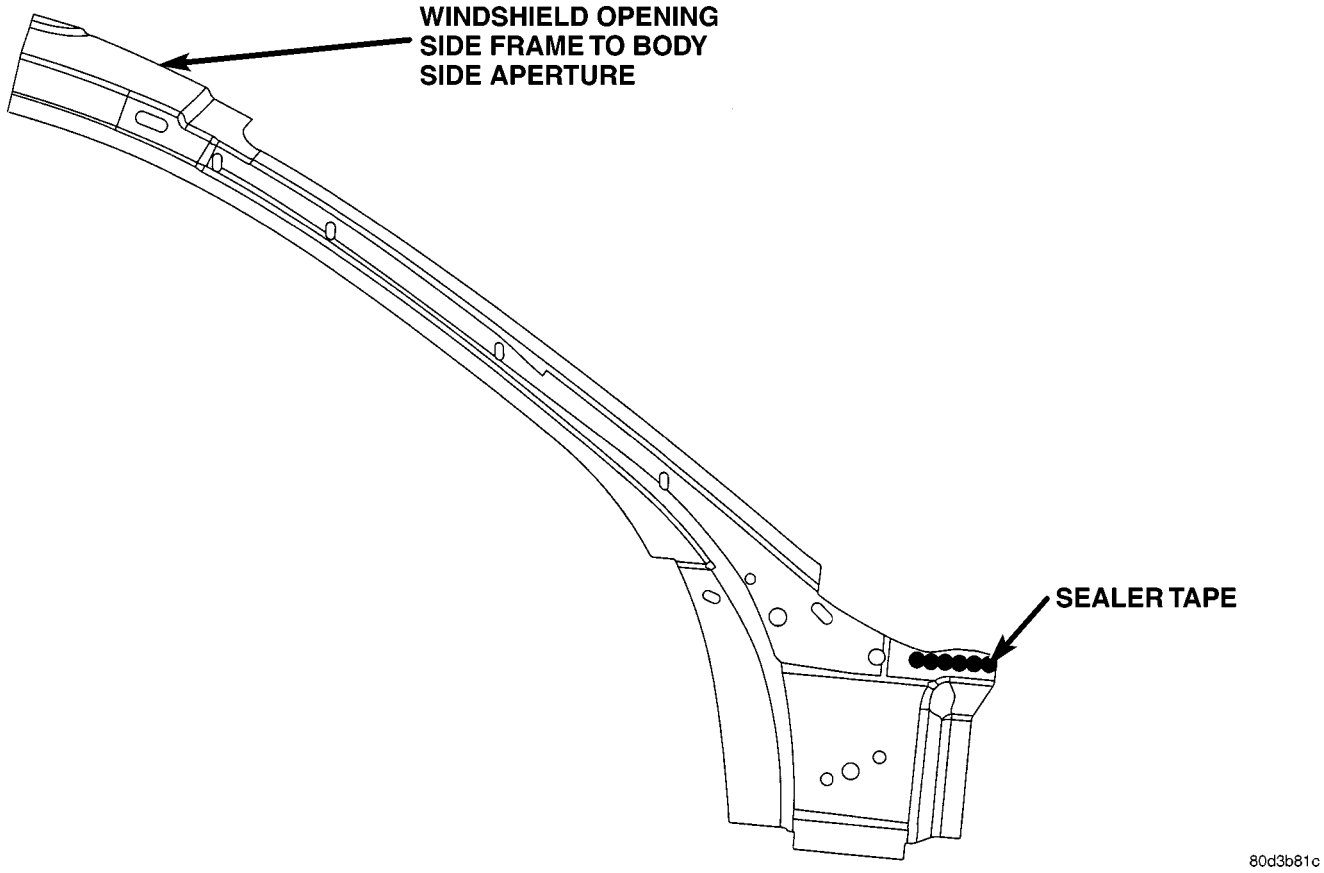

Fig. 71 WINDSHIELD OPENING SIDE FRAME & BODY SIDE APERTURE

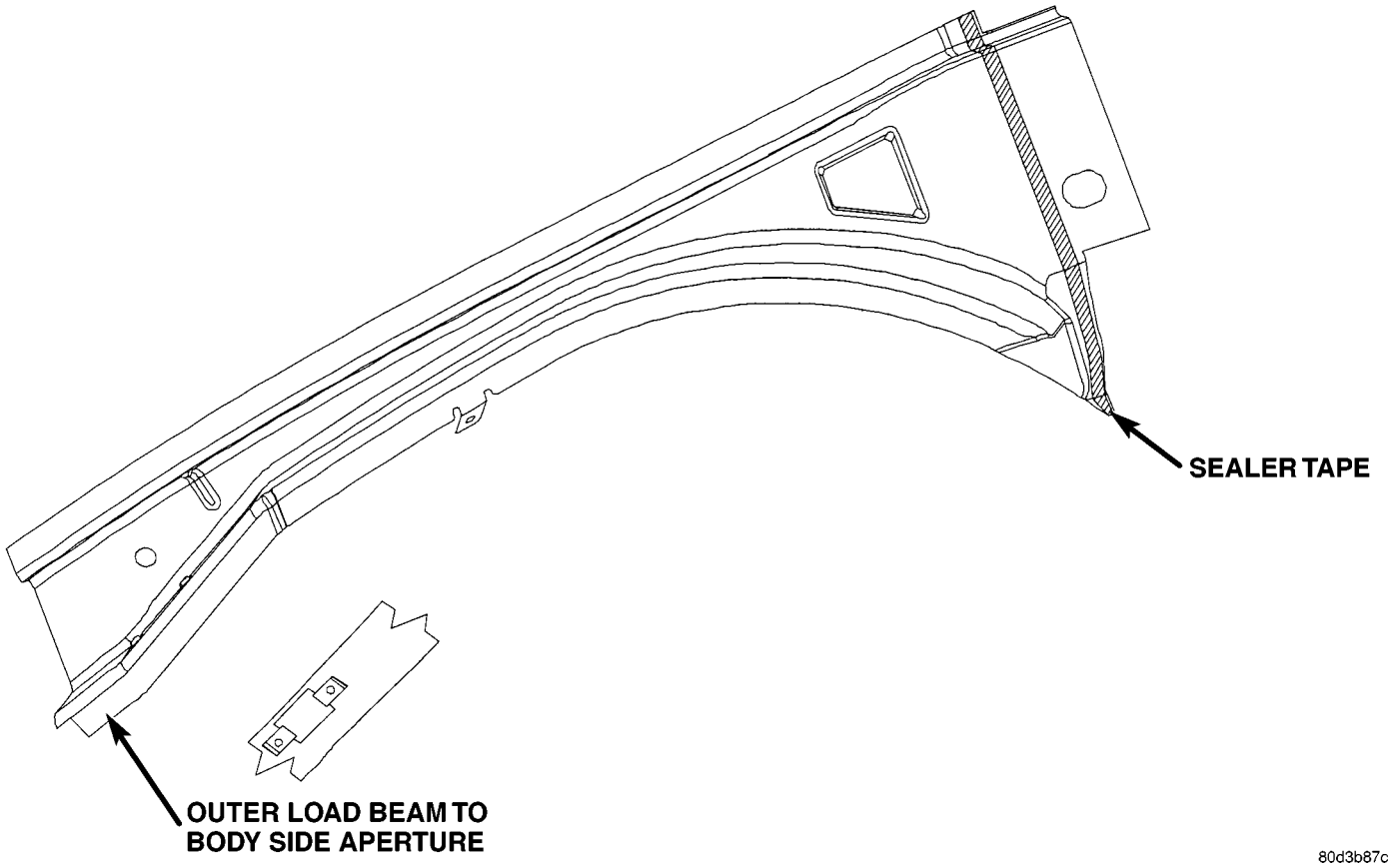

Fig. 72 OUTER UPPER LOAD BEAM & BODY SIDE APERTURE

SEALER LOCATIONS (Continued)

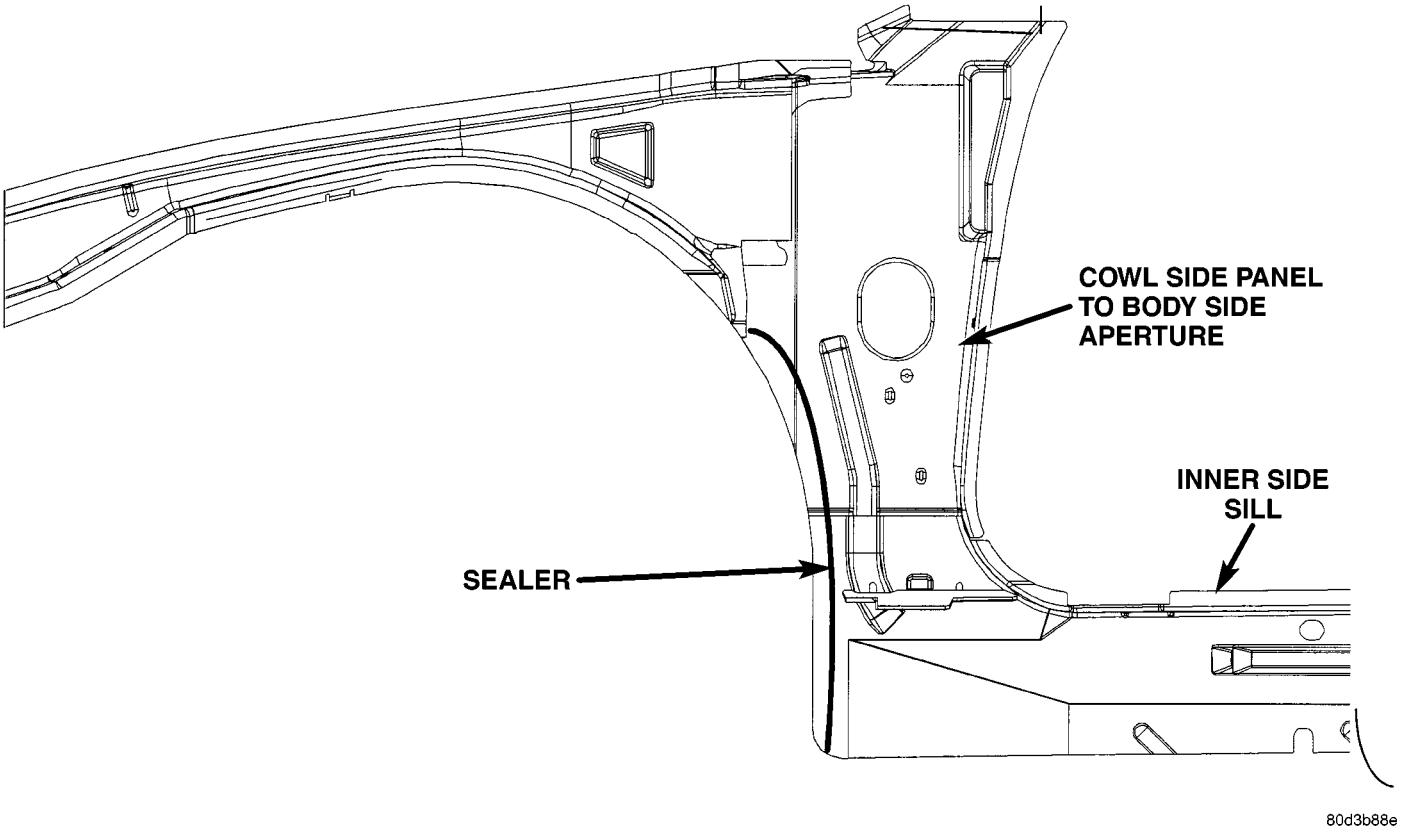

Fig. 73 COWL SIDE PANEL, BODY SIDE APERTURE & INNER SIDE SILL

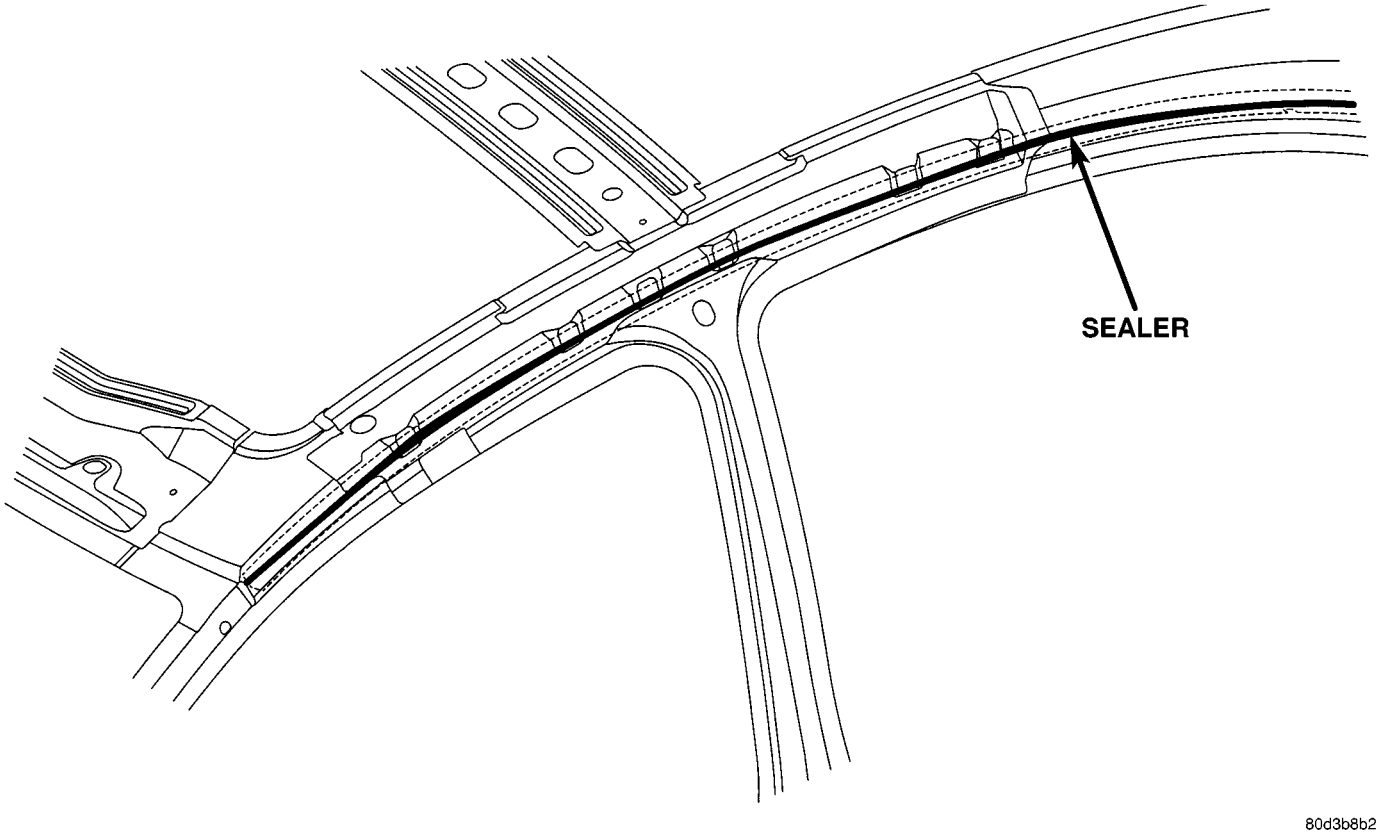

Fig. 74 ROOF SUPPORT, DRIP RAIL & ROOF PANEL

STRUCTURAL ADHESIVE LOCATIONS

SPECIFICATIONS

SPECIFICATIONS - STRUCTURAL ADHESIVE LOCATIONS - JR-27

INDEX

DESCRIPTION	FIGURE
FRONT AND REAR FLOOR PANS	75
FRONT FLOOR PAN AND DASH PANEL	76
FRONT FLOOR PAN, COWL SIDE PANEL AND INNER BODY SIDE SILL	77
REAR FLOOR PAN	78
INNER QUARTER PANEL AND INNER REAR WHEELHOUSE	79
LOWER DECK PANEL, REAR FLOOR PAN AND REAR SHOULDER BELT CROSSMEMBER	80
WHEELHOUSE LEFT OUTER PANEL	81
WHEELHOUSE RIGHT OUTER PANEL	82
OPENING INNER FRAME RIGHT/LEFT	83
PUSH PINS MELT SEAL	84
QUARTER OUTER PANEL TROUGH	85
QUARTER OUTER PANEL SUB	86
INNER BODY SIDE APERTURE	87
BODY SIDE APERTURE, INNER QUARTER PANEL & WINDSHIELD FRAME	88
REAR HEADER	89
OUTER WHEELHOUSE	90
LOWER QUARTER EXTENSION, TAIL LAMP CAN & OUTER QUARTER FILLER	91

STRUCTURAL ADHESIVE LOCATIONS (Continued)

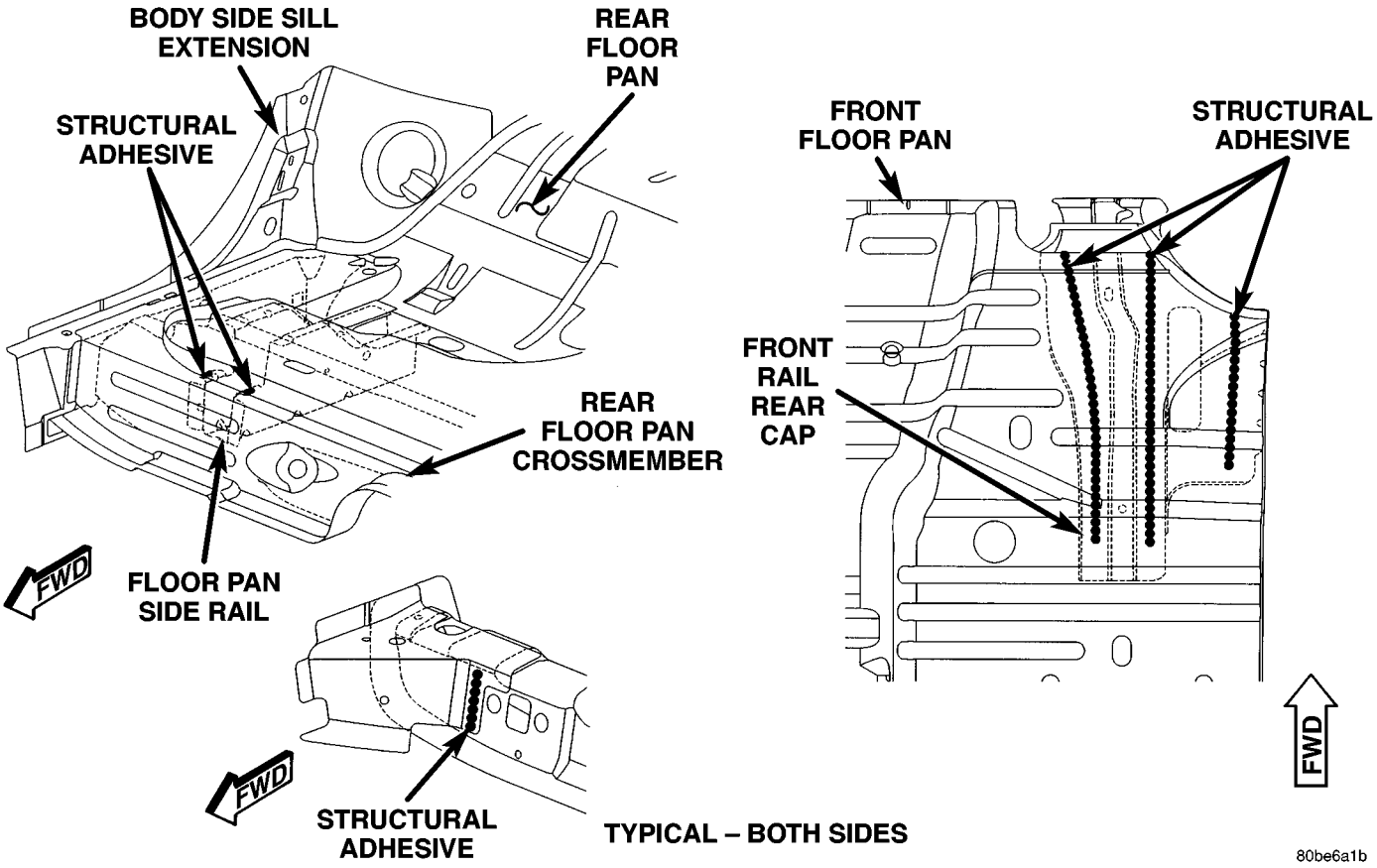

Fig. 75 FRONT AND REAR FLOOR PANS

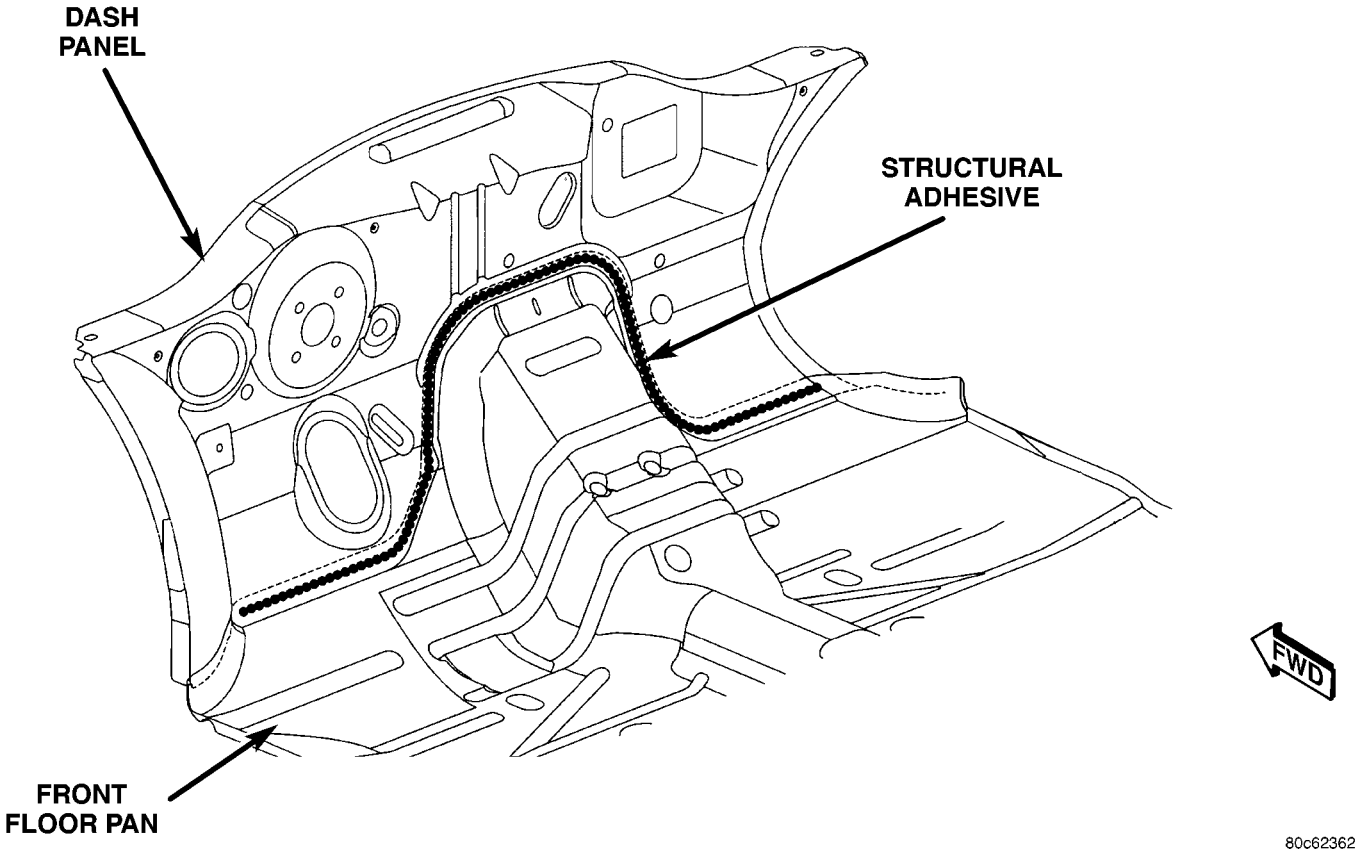

Fig. 76 FRONT FLOOR PAN AND DASH PANEL

STRUCTURAL ADHESIVE LOCATIONS (Continued)

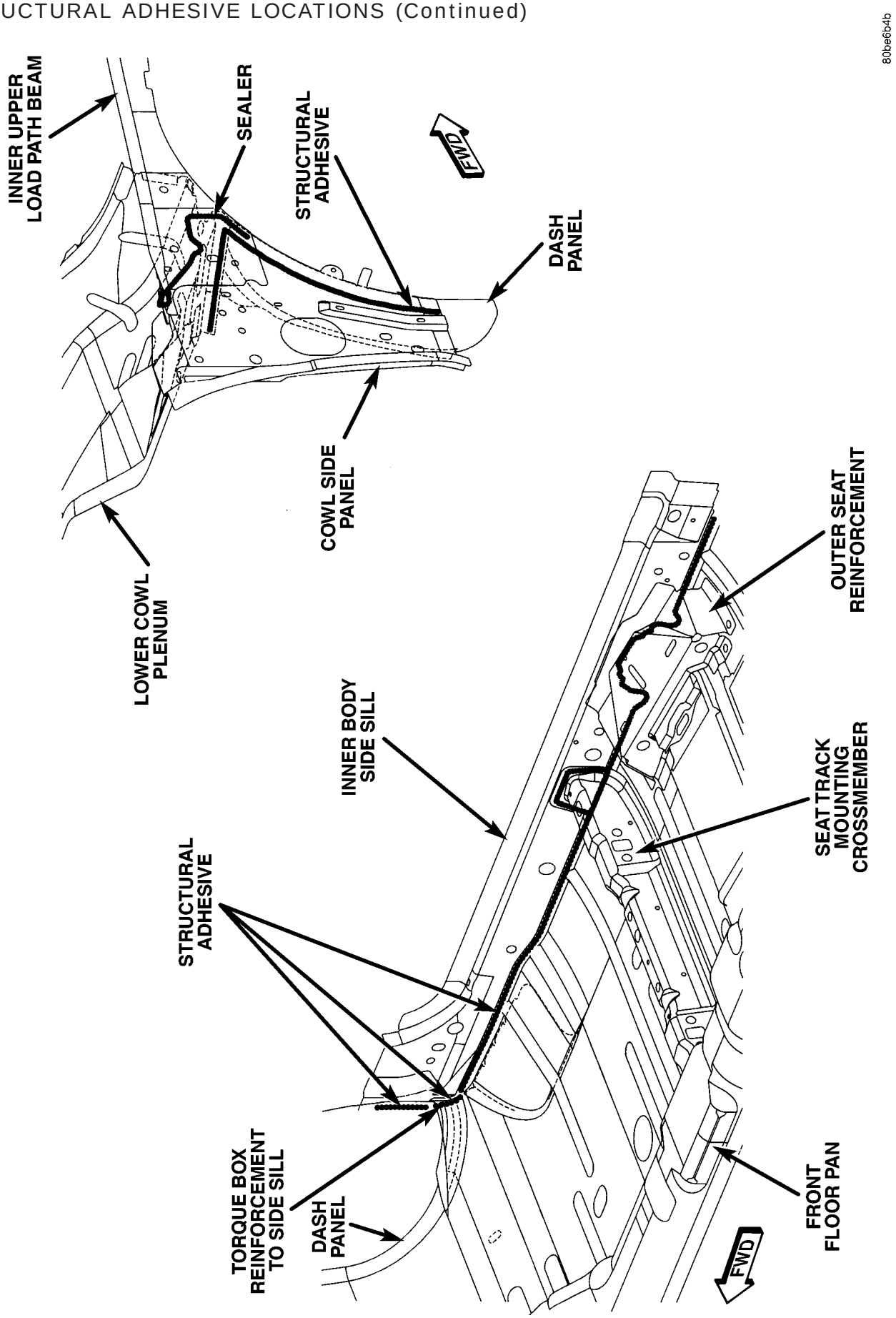

Fig. 77 FRONT FLOOR PAN, COWL SIDE PANEL AND INNER BODY SIDE SILL

STRUCTURAL ADHESIVE LOCATIONS (Continued)

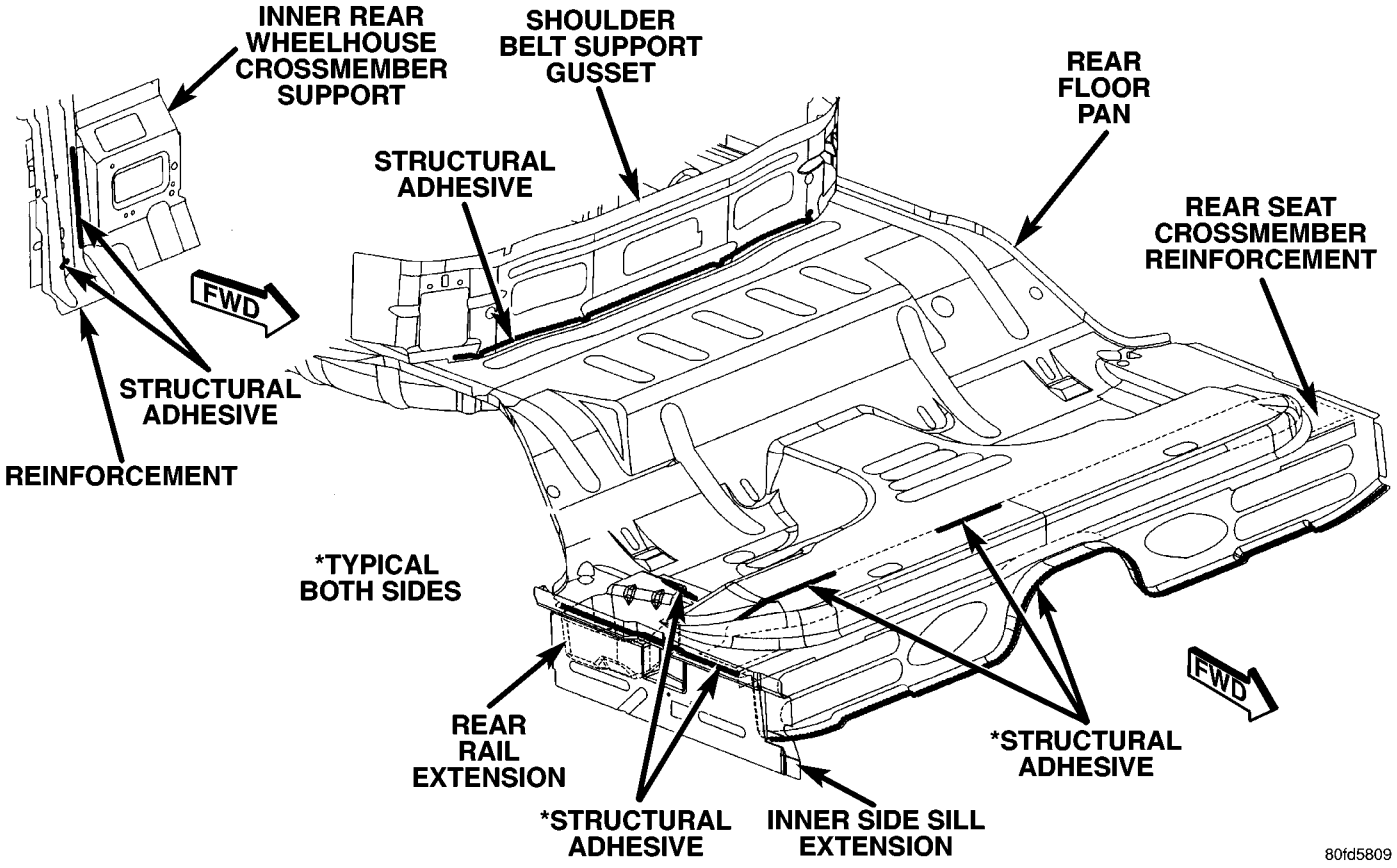

Fig. 78 REAR FLOOR PAN

STRUCTURAL ADHESIVE LOCATIONS (Continued)

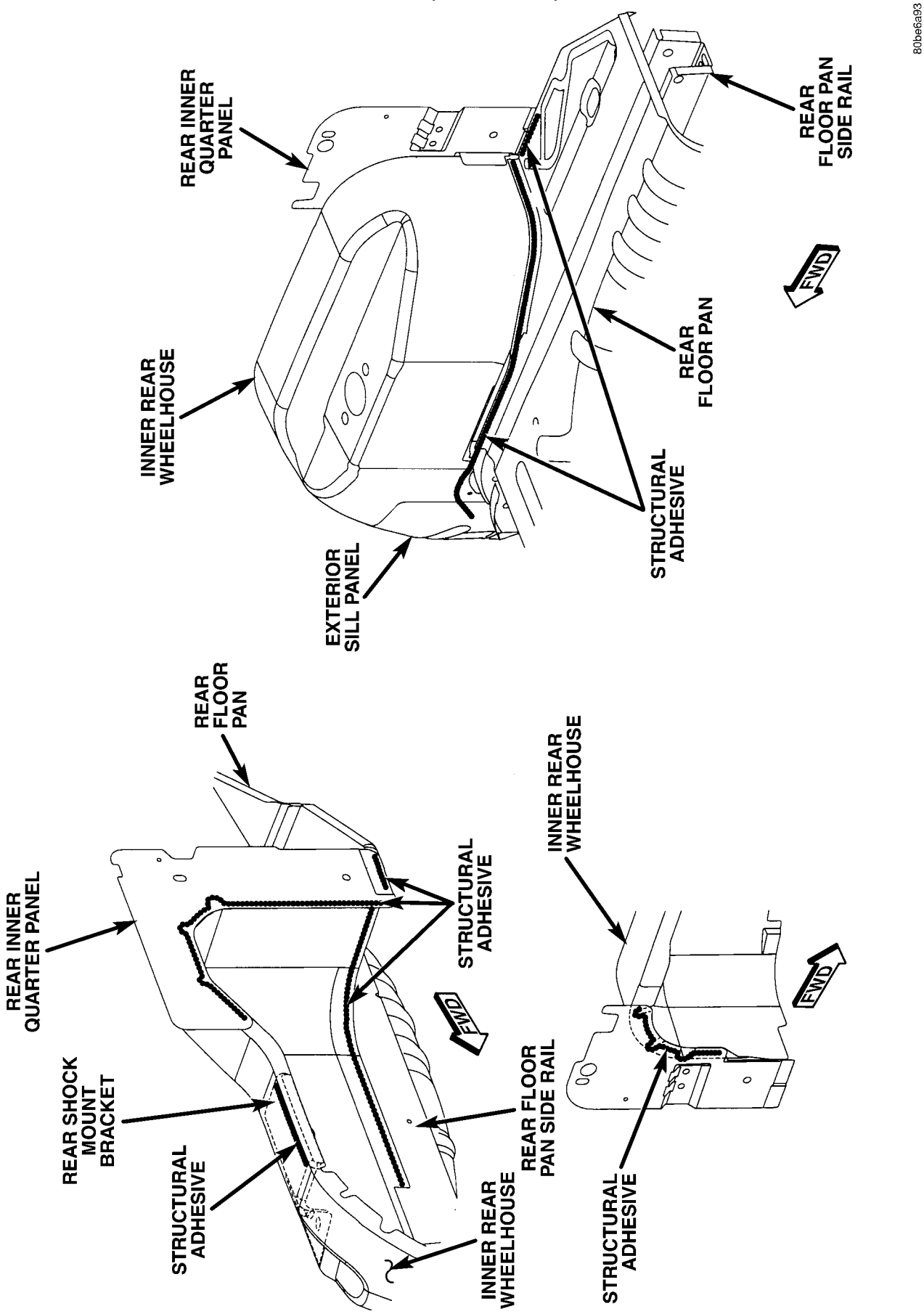

Fig. 79 INNER QUARTER PANEL AND INNER REAR WHEELHOUSE

STRUCTURAL ADHESIVE LOCATIONS (Continued)

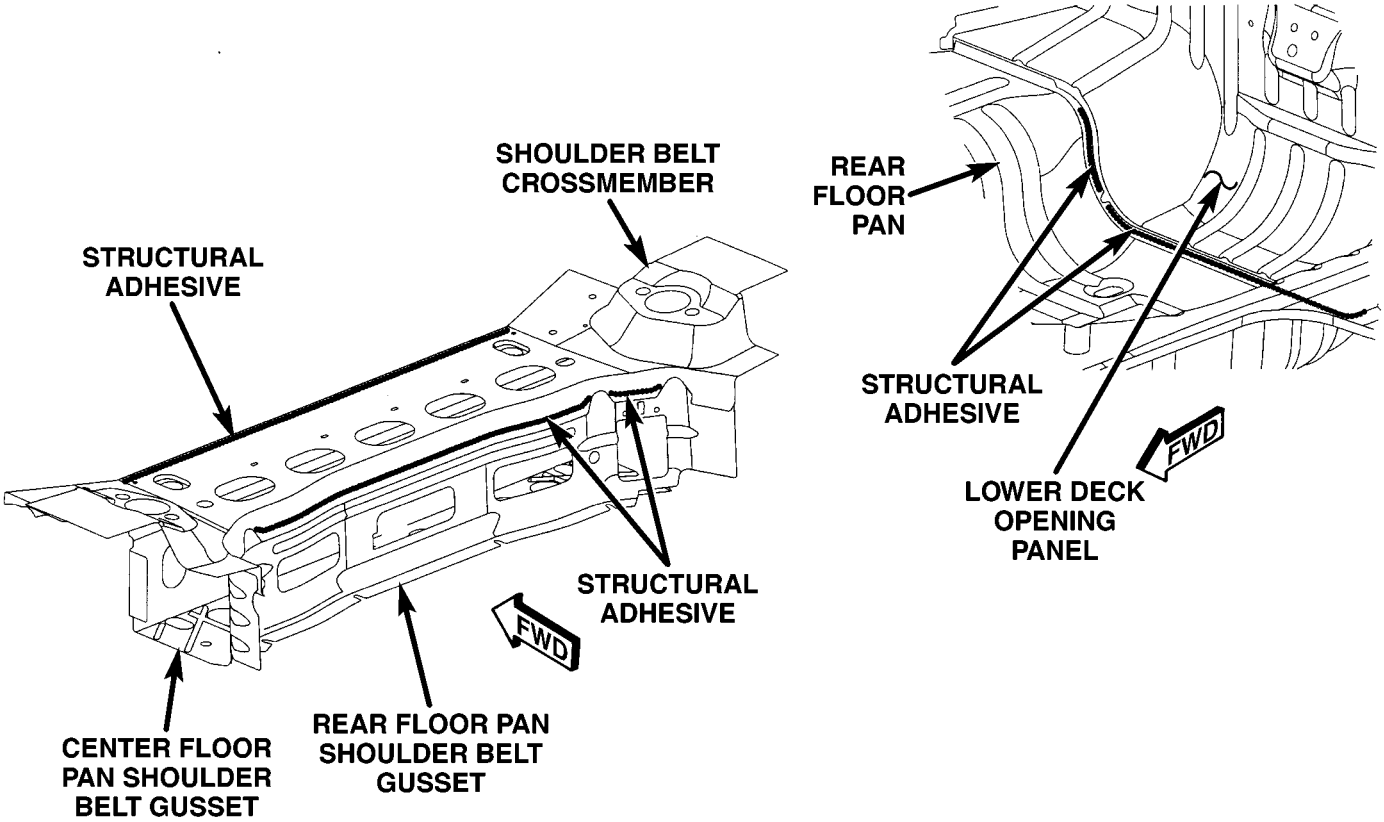

80be6a97

Fig. 80 LOWER DECK PANEL, REAR FLOOR PAN AND REAR SHOULDER BELT CROSSMEMBER

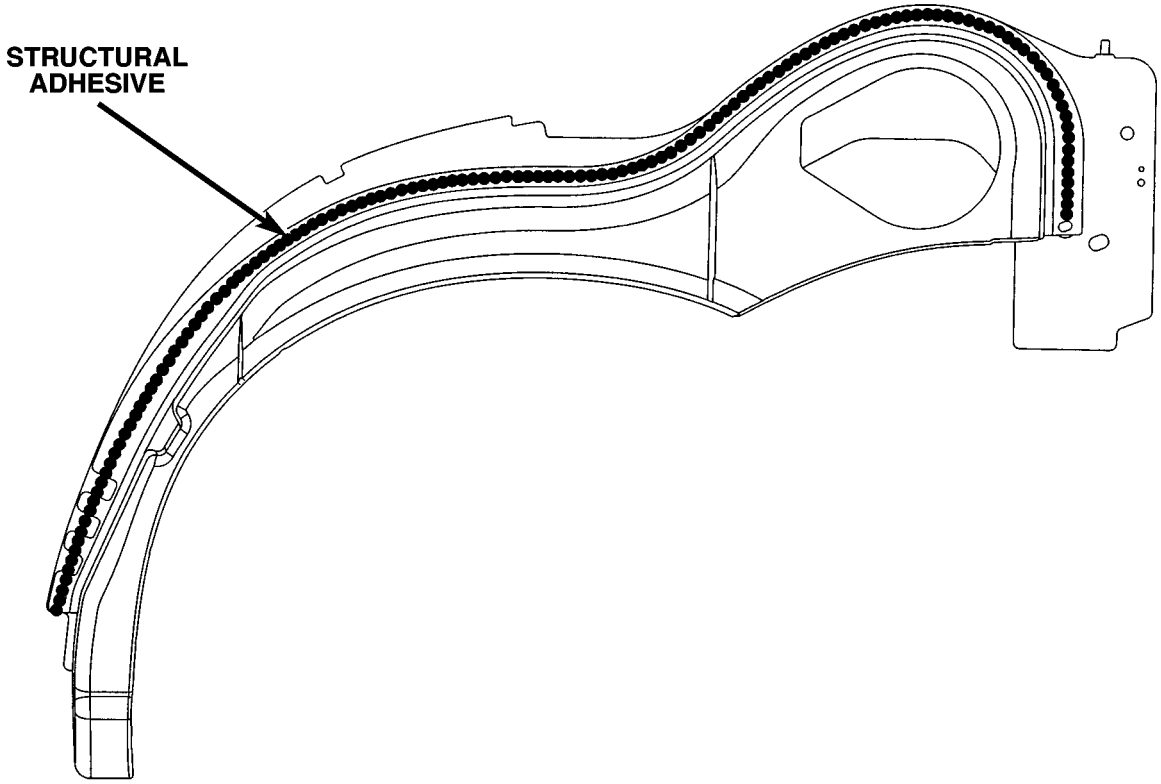

80d34fe8

Fig. 81 WHEELHOUSE LEFT OUTER PANEL

STRUCTURAL ADHESIVE LOCATIONS (Continued)

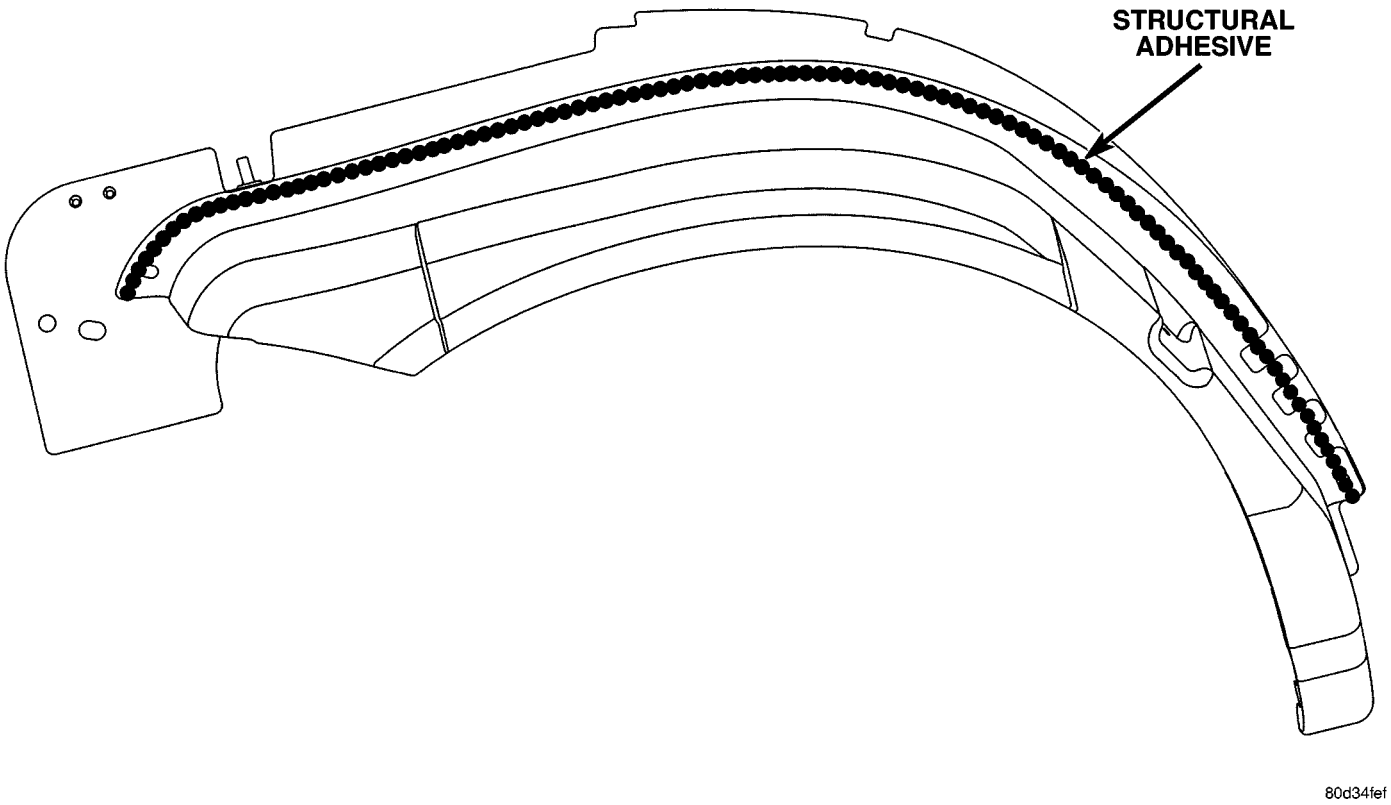

Fig. 82 WHEELHOUSE RIGHT OUTER PANEL

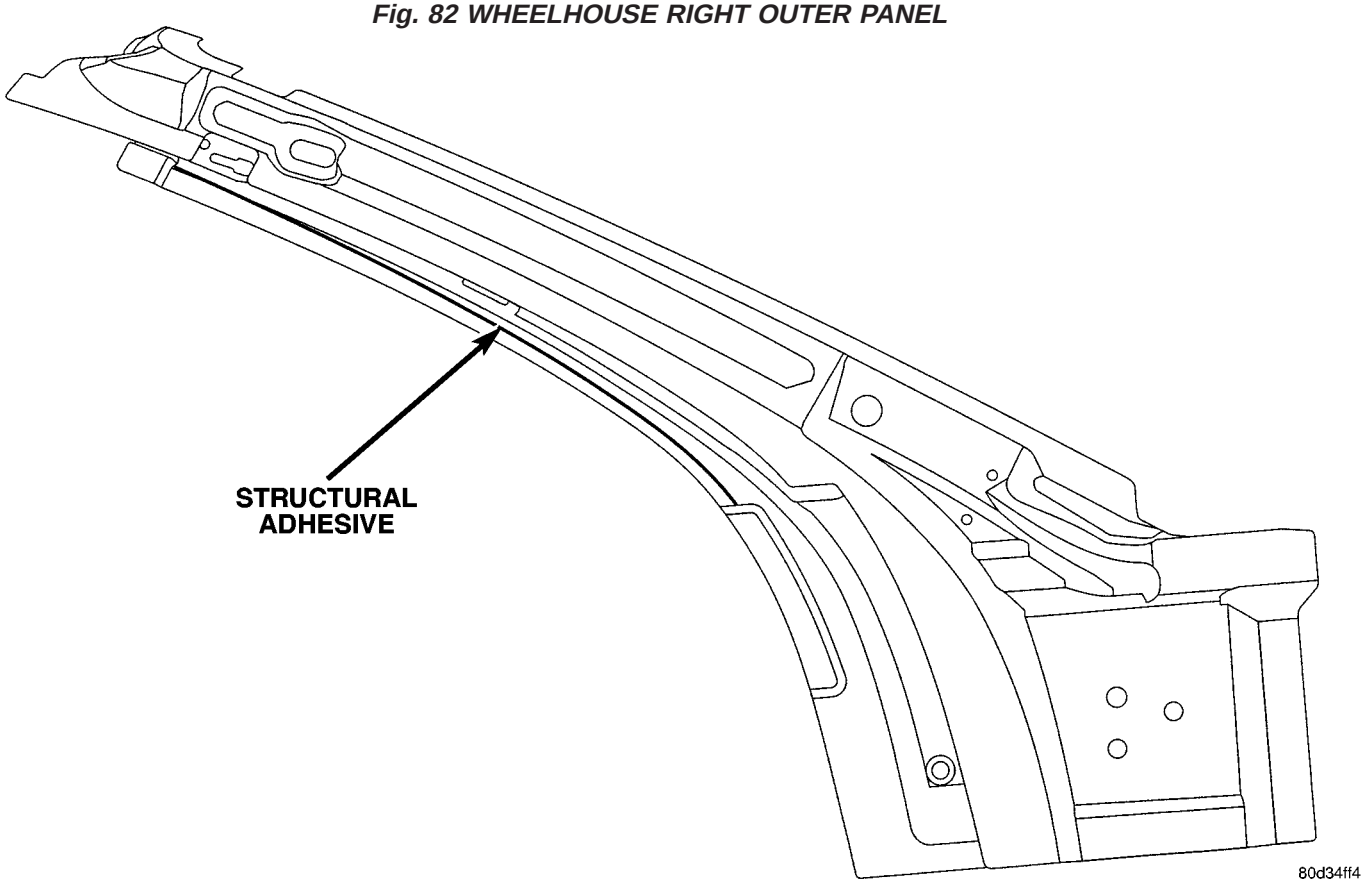

Fig. 83 OPENING INNER FRAME RIGHT/LEFT

STRUCTURAL ADHESIVE LOCATIONS (Continued)

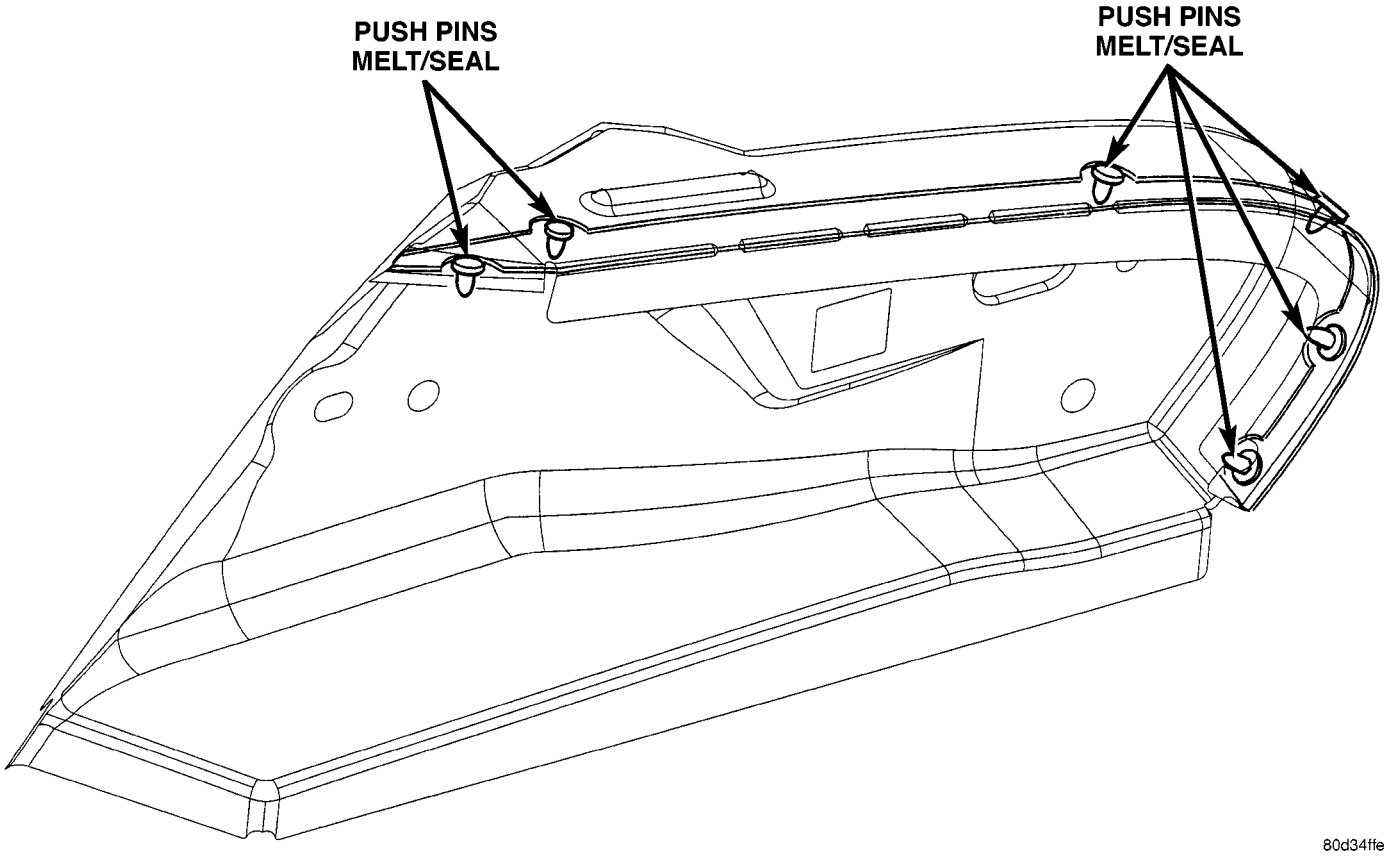

Fig. 84 PUSH PINS MELT SEAL

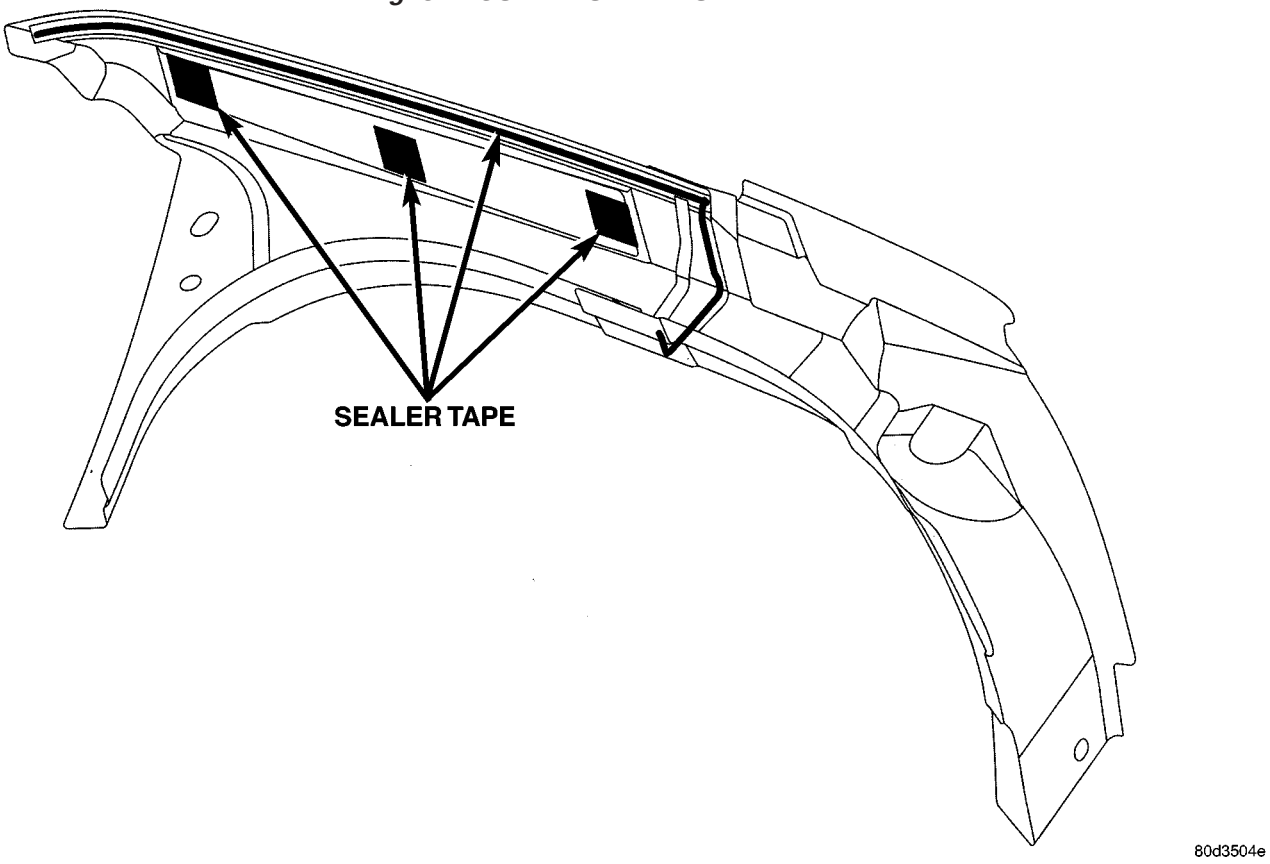

Fig. 85 QUARTER OUTER PANEL TROUGH

STRUCTURAL ADHESIVE LOCATIONS (Continued)

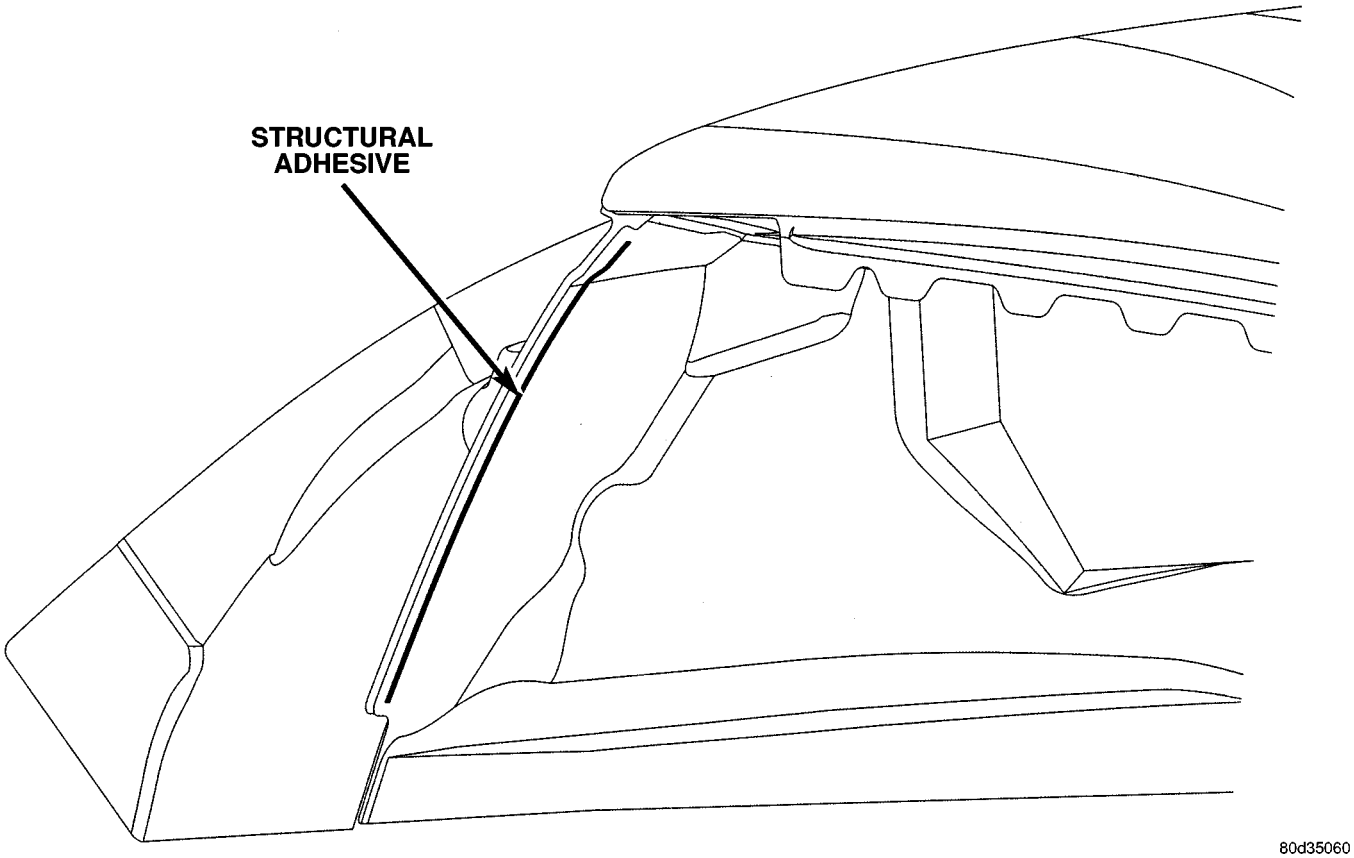

Fig. 86 QUARTER OUTER PANEL SUB

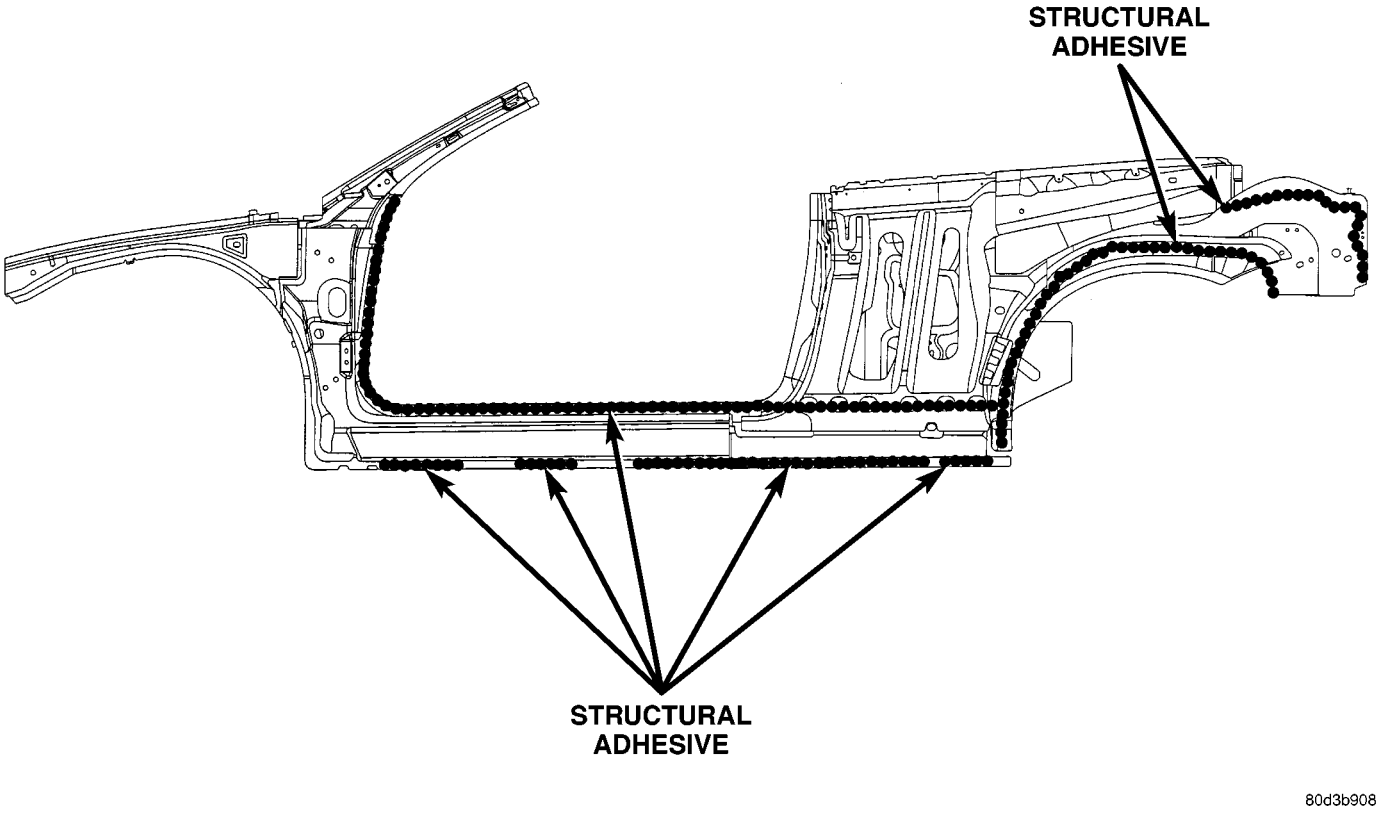

Fig. 87 INNER BODY SIDE APERTURE

STRUCTURAL ADHESIVE LOCATIONS (Continued)

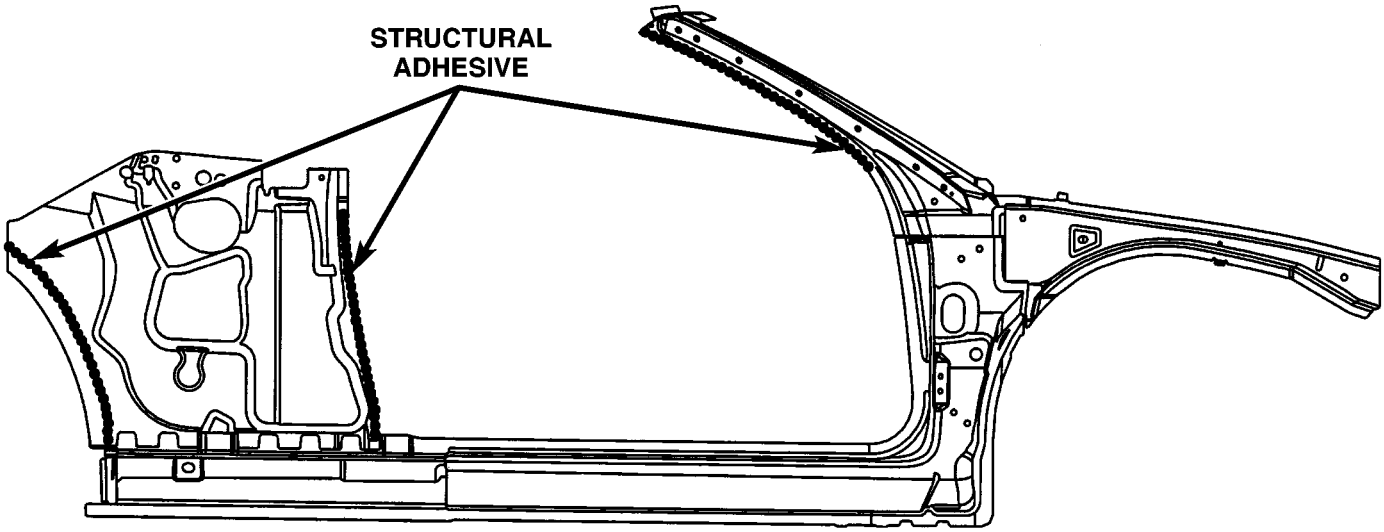

80d3b910

Fig. 88 BODY SIDE APERTURE, INNER QUARTER PANEL & WINDSHIELD FRAME

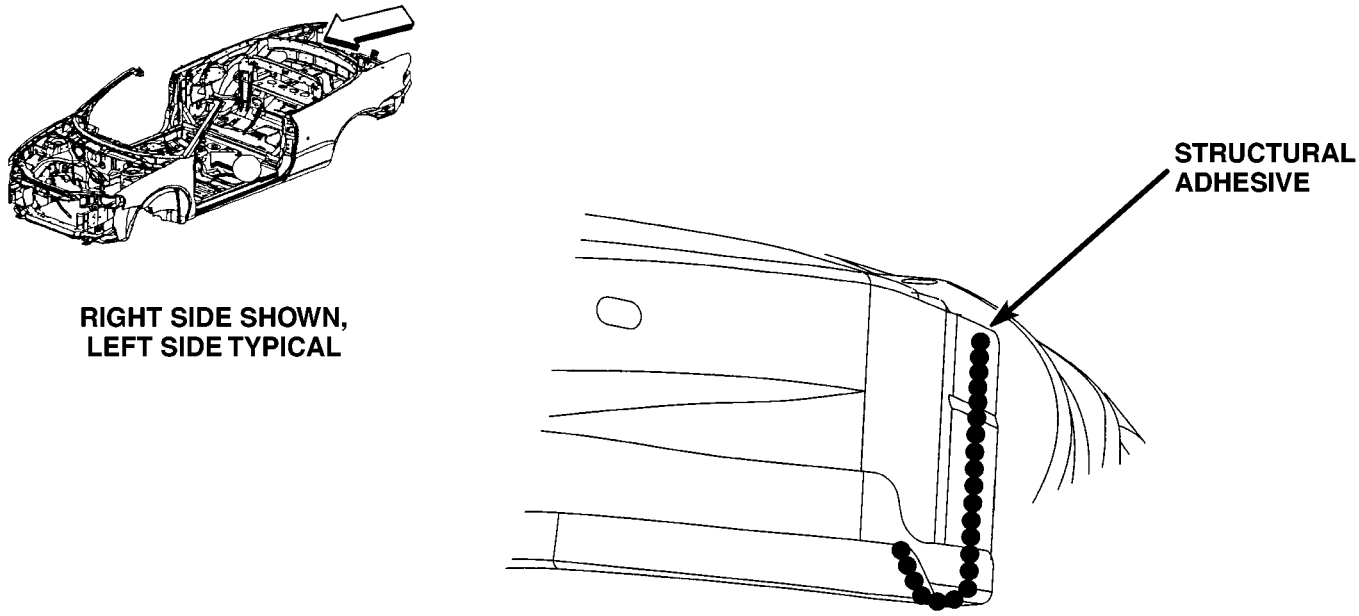

80d3b914

Fig. 89 REAR HEADER

STRUCTURAL ADHESIVE LOCATIONS (Continued)

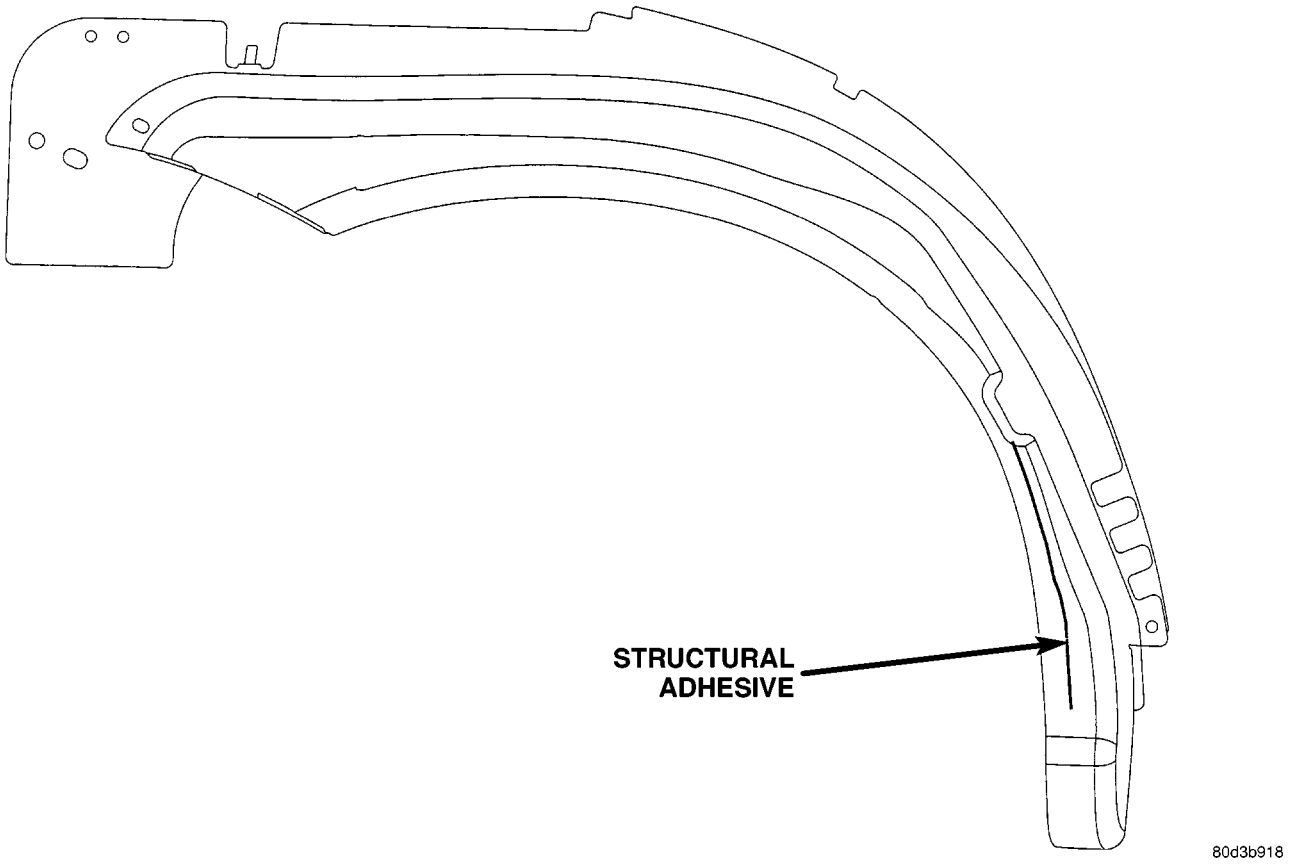

Fig. 90 OUTER WHEELHOUSE

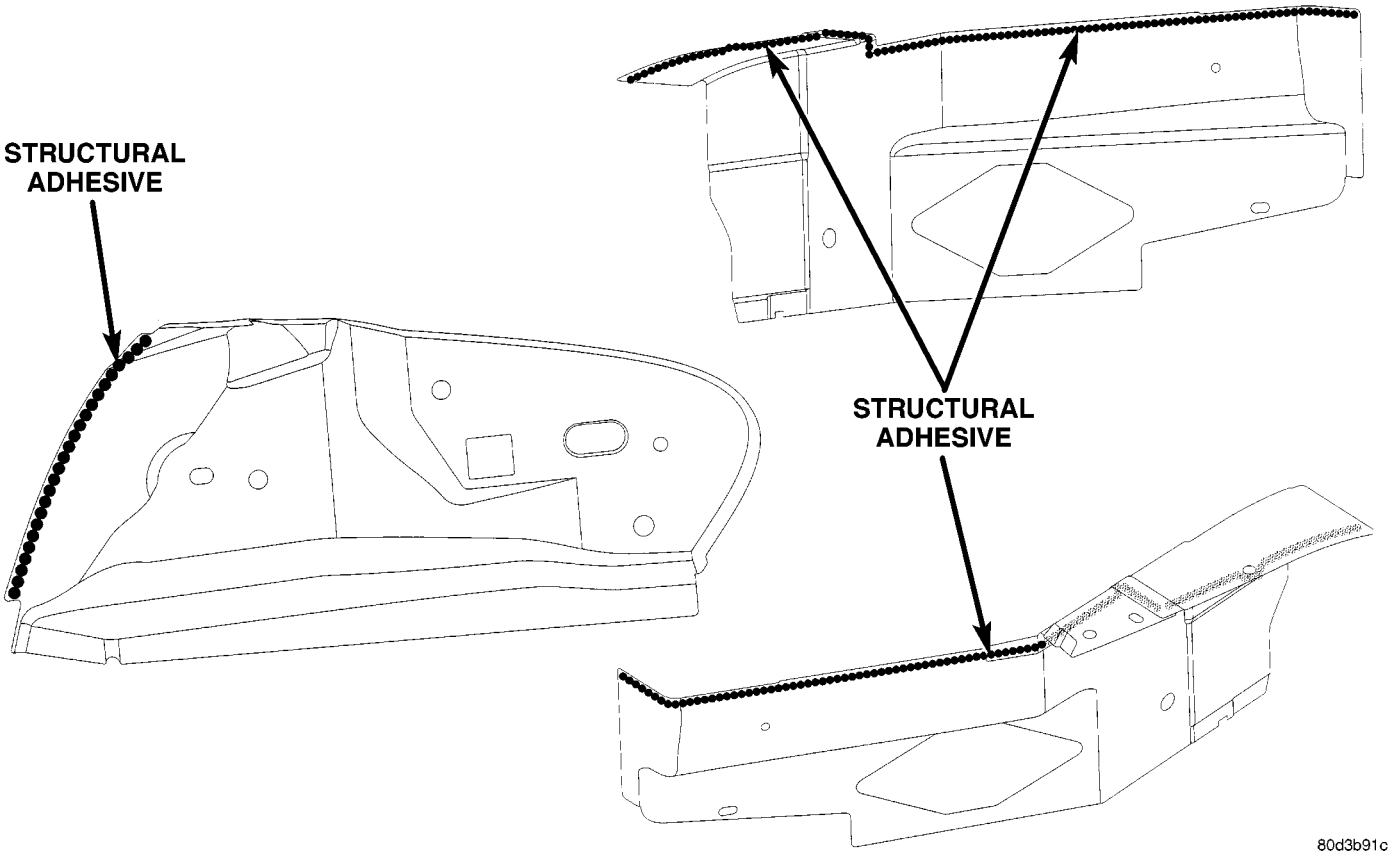

Fig. 91 LOWER QUARTER EXTENSION, TAIL LAMP CAN & OUTER QUARTER FILLER

STRUCTURAL ADHESIVE LOCATIONS (Continued)

SPECIFICATIONS - STRUCTURAL ADHESIVE LOCATIONS - JR-41

INDEX

DESCRIPTION	FIGURE
FRONT AND REAR FLOOR PANS	92
FRONT/REAR FLOOR PAN CROSSMEMBER REINFORCEMENT	93
FRONT FLOOR PAN AND DASH PANEL	94
INNER & OUTER UPPER LOAD PATH BEAMS, HINGE PILLAR REINFORCEMENT	95
INNER WINDSHIELD FRAME	96
ROOF BOW/CENTER PILLAR	97
SIDE SILL REINFORCEMENT TO CENTER PILLAR	98
BAFFLE PLUG COWL PLENUM	99
ROOF PANEL, INNER QUARTER UPPER BODY SIDE APERTURE, UPPER WINDSHIELD FRAME & BACKLITE FRAME REINFORCEMENT	100

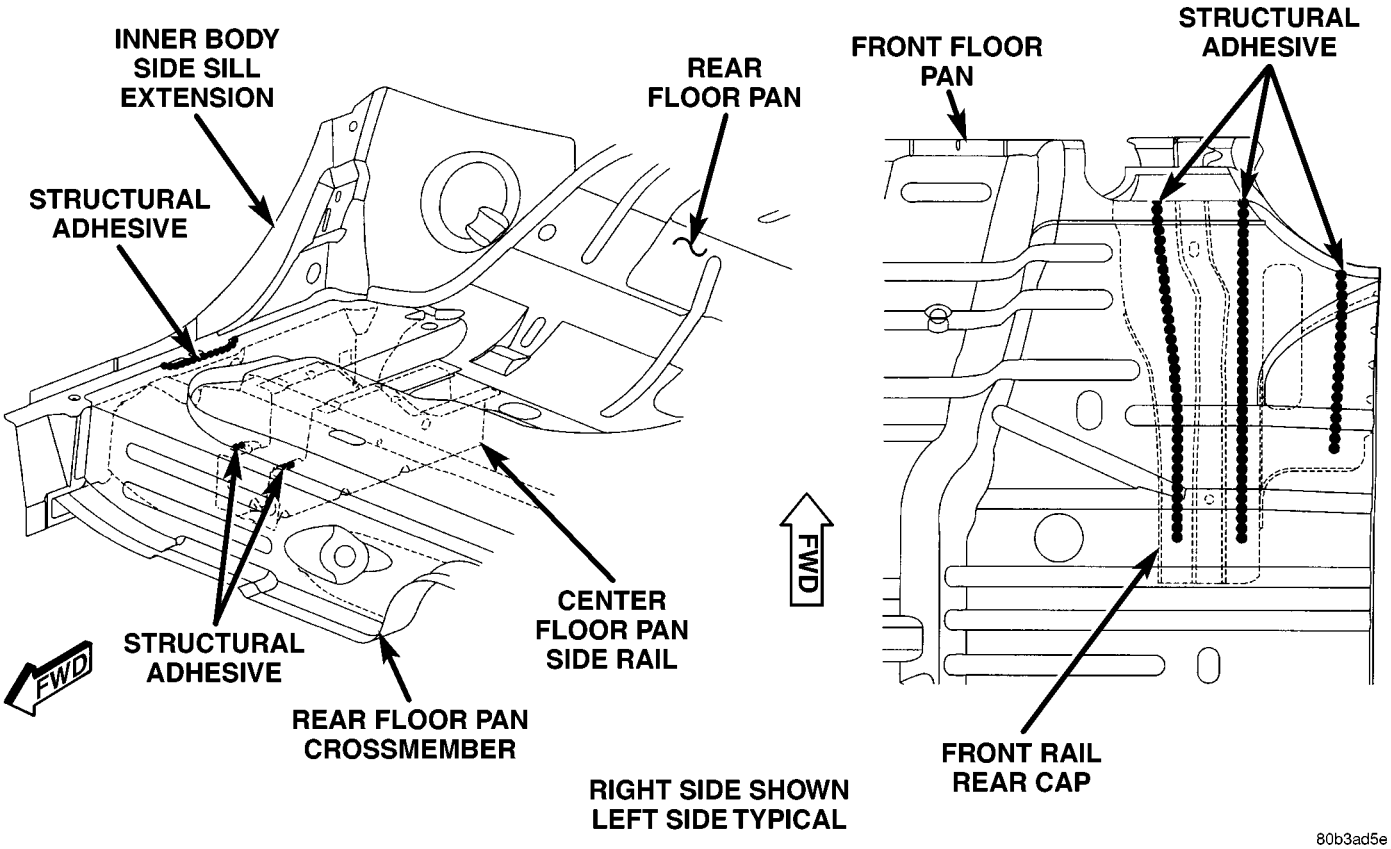

Fig. 92 FRONT AND REAR FLOOR PANS

STRUCTURAL ADHESIVE LOCATIONS (Continued)

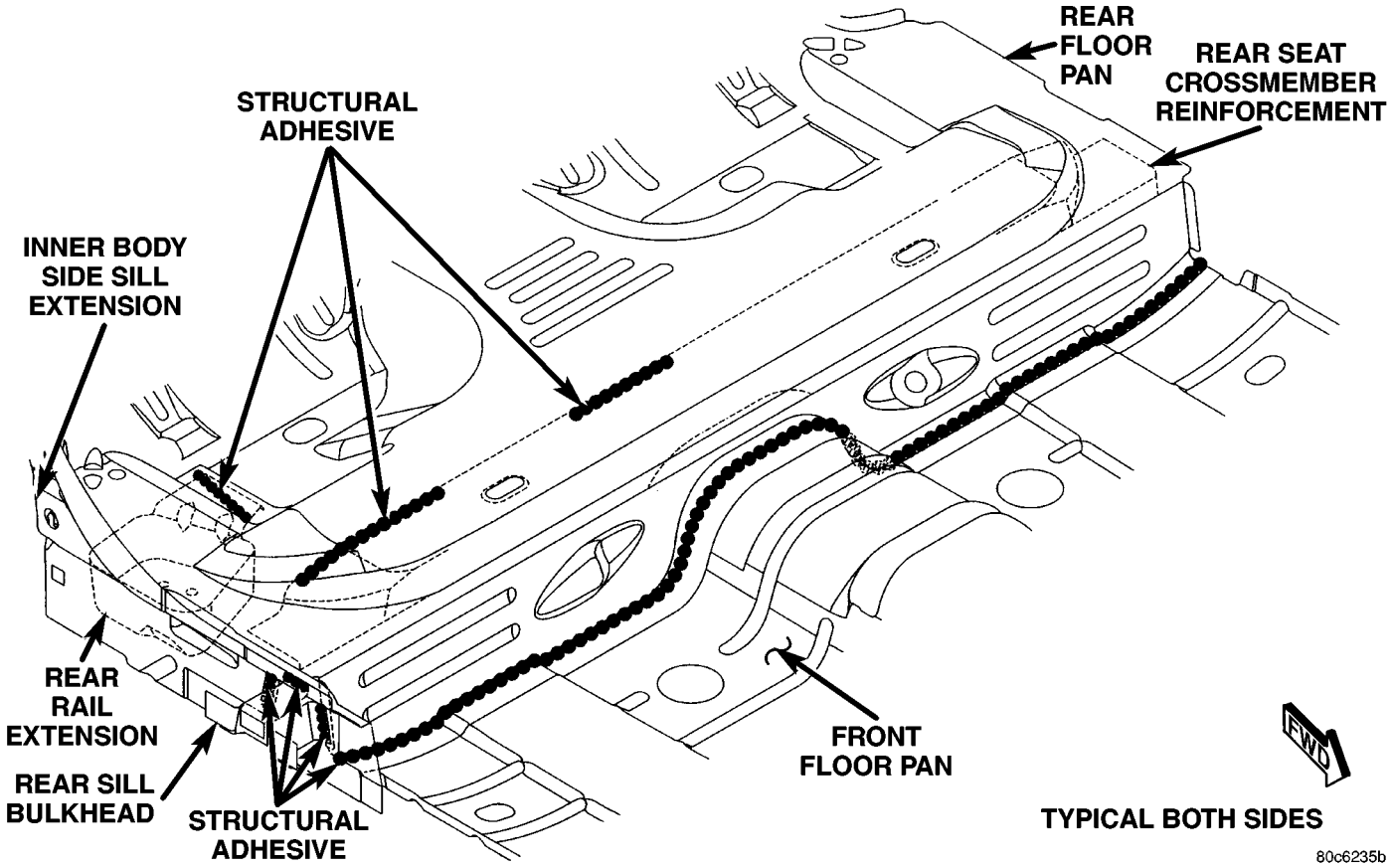

Fig. 93 FRONT/REAR FLOOR PAN CROSSMEMBER REINFORCEMENT

STRUCTURAL ADHESIVE LOCATIONS (Continued)

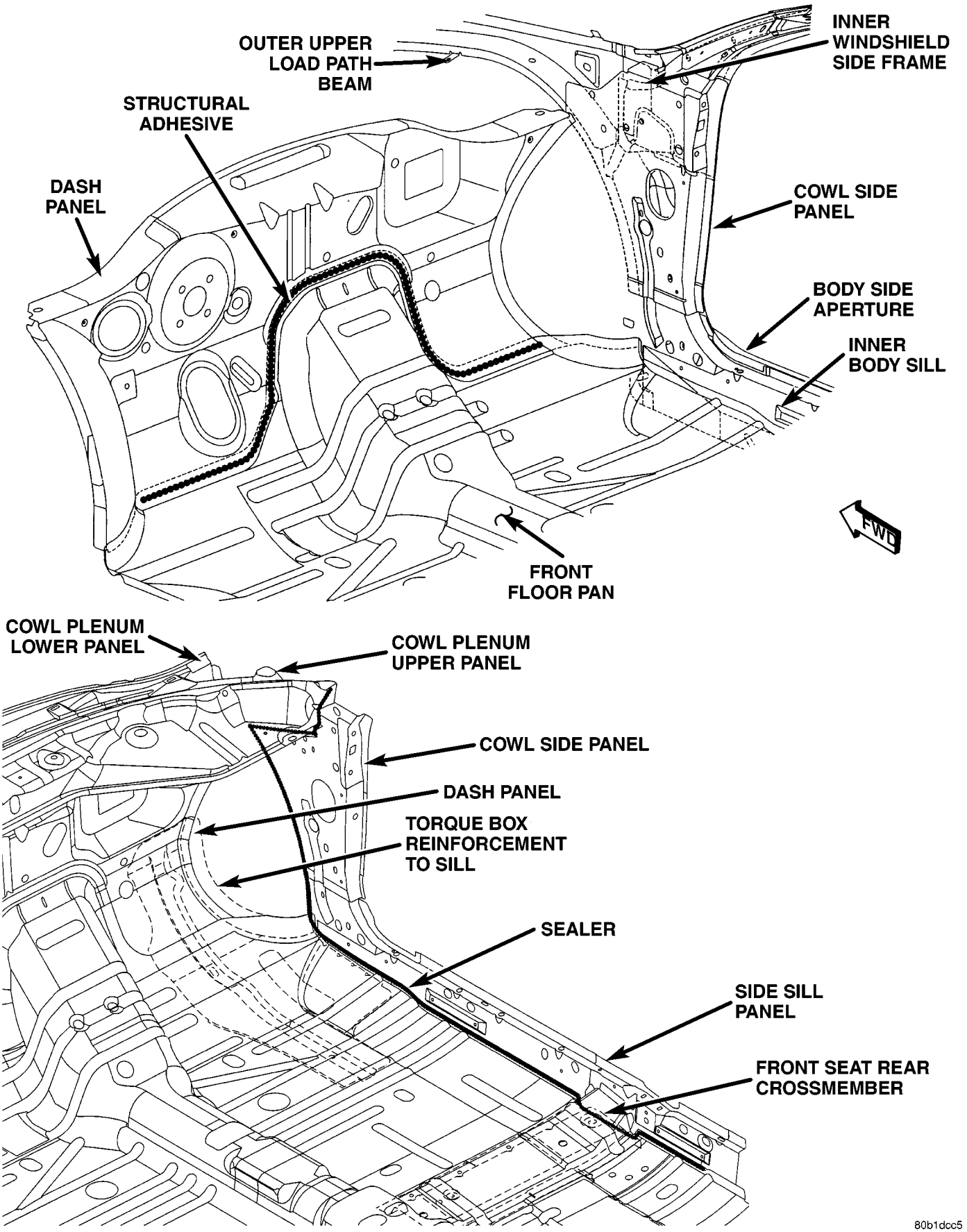

Fig. 94 FRONT FLOOR PAN AND DASH PANEL

STRUCTURAL ADHESIVE LOCATIONS (Continued)

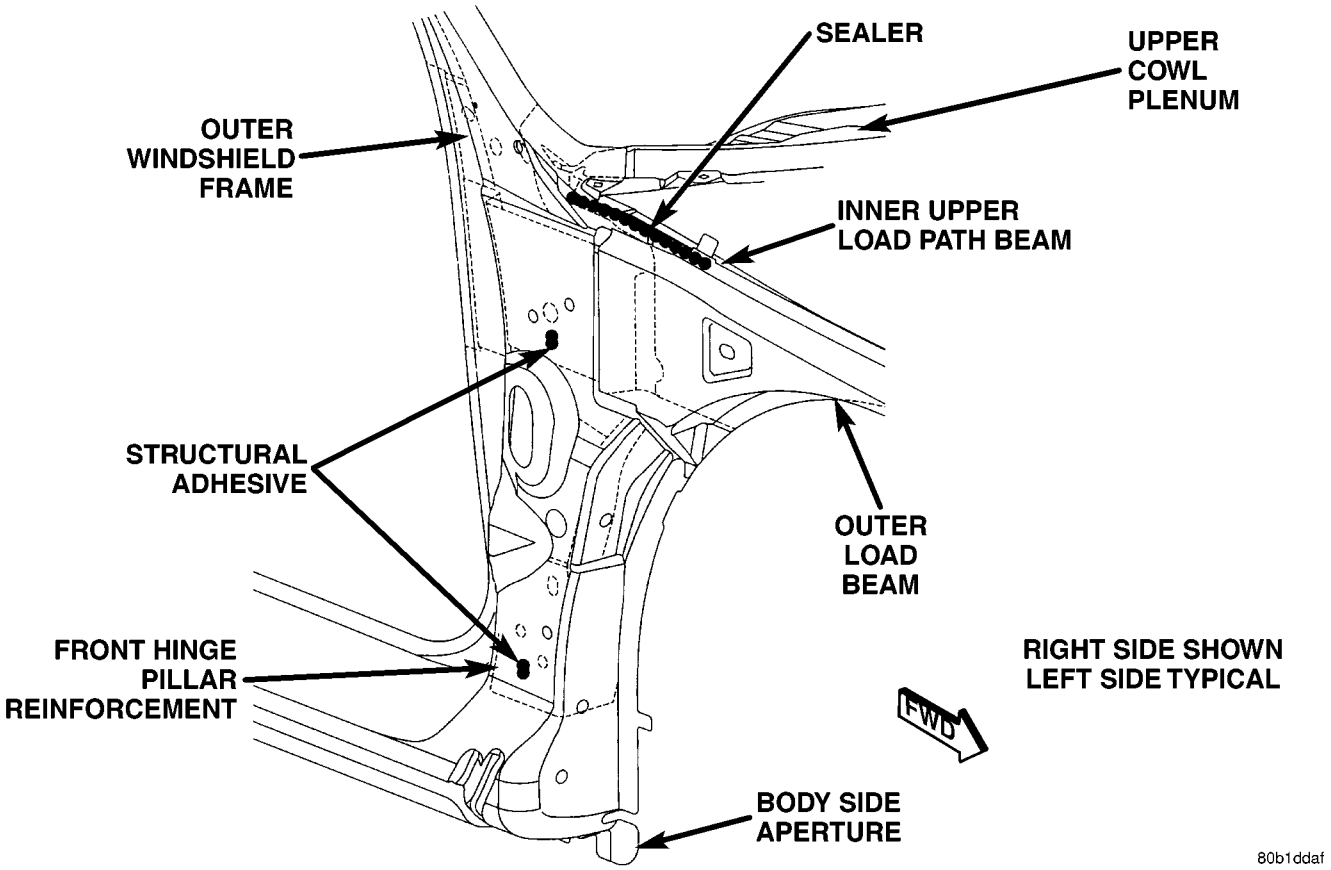

Fig. 95 INNER & OUTER UPPER LOAD PATH BEAMS, HINGE PILLAR REINFORCEMENT

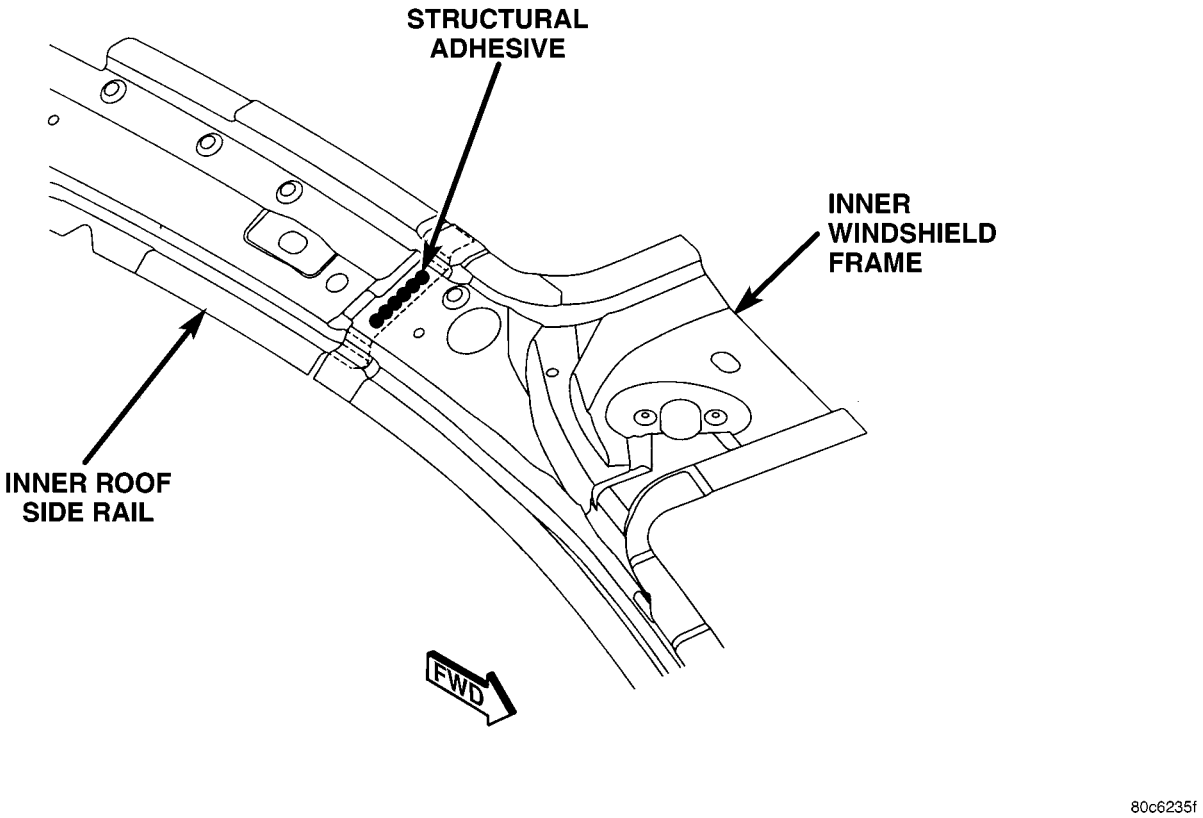

Fig. 96 INNER WINDSHIELD FRAME

STRUCTURAL ADHESIVE LOCATIONS (Continued)

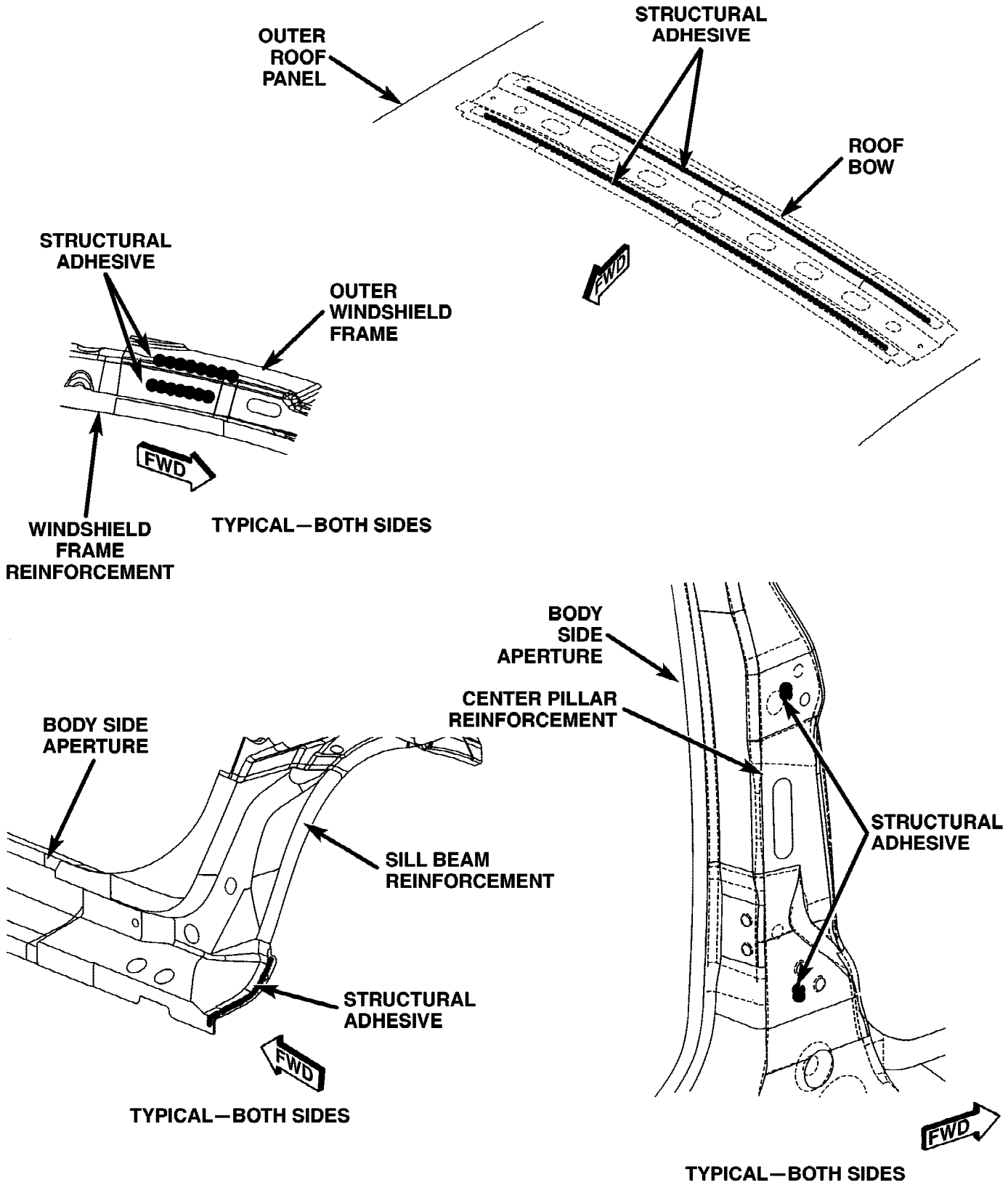

80c62360

Fig. 97 ROOF BOW/CENTER PILLAR

STRUCTURAL ADHESIVE LOCATIONS (Continued)

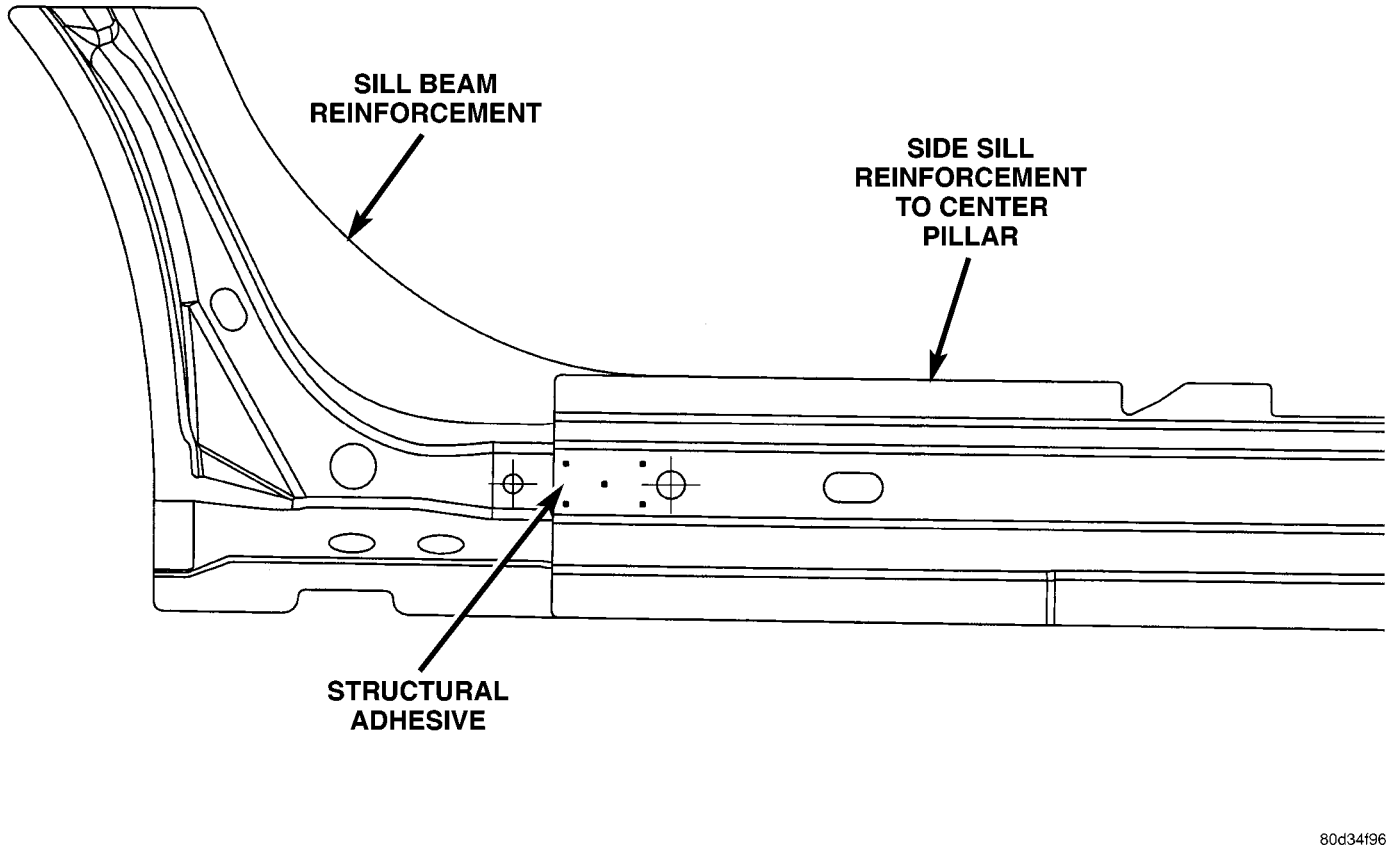

Fig. 98 SIDE SILL REINFORCEMENT TO CENTER PILLAR

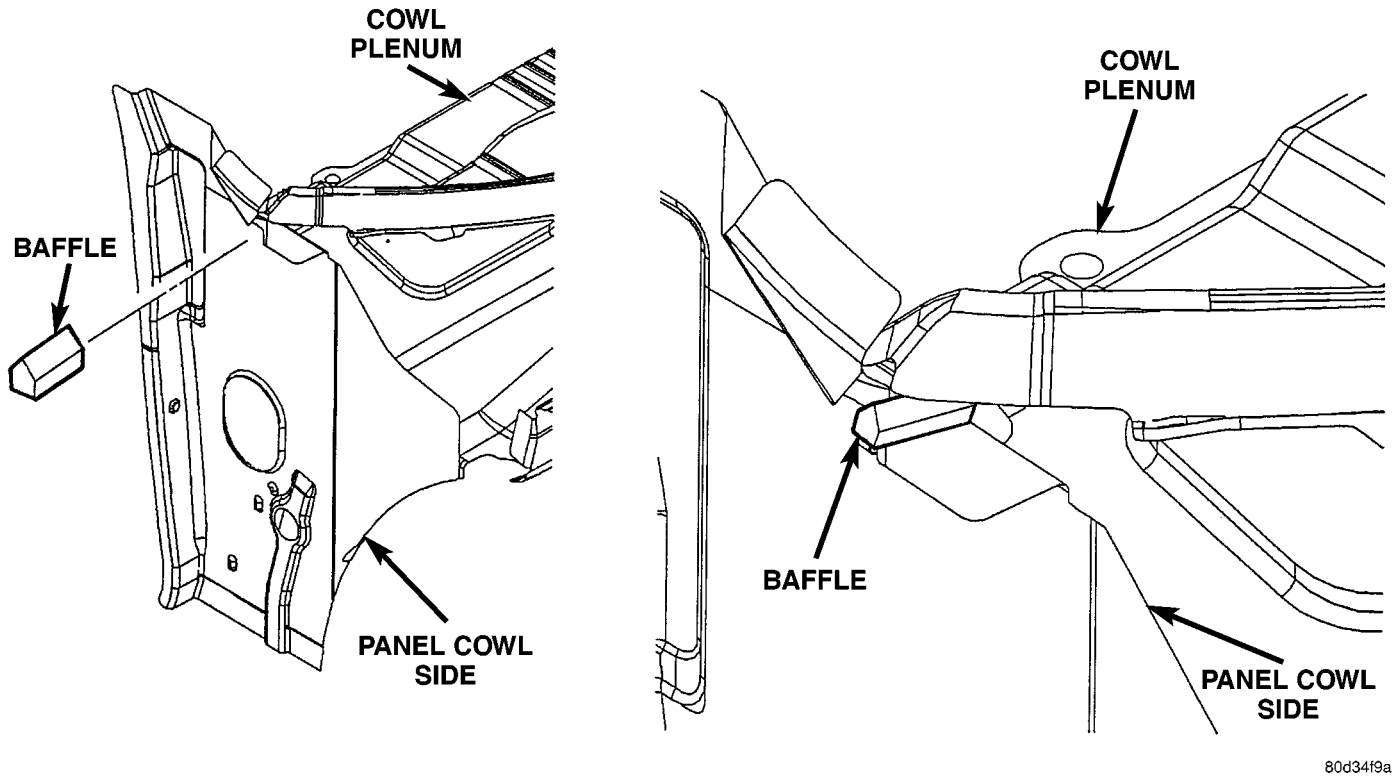

Fig. 99 BAFFLE PLUG COWL PLENUM

STRUCTURAL ADHESIVE LOCATIONS (Continued)

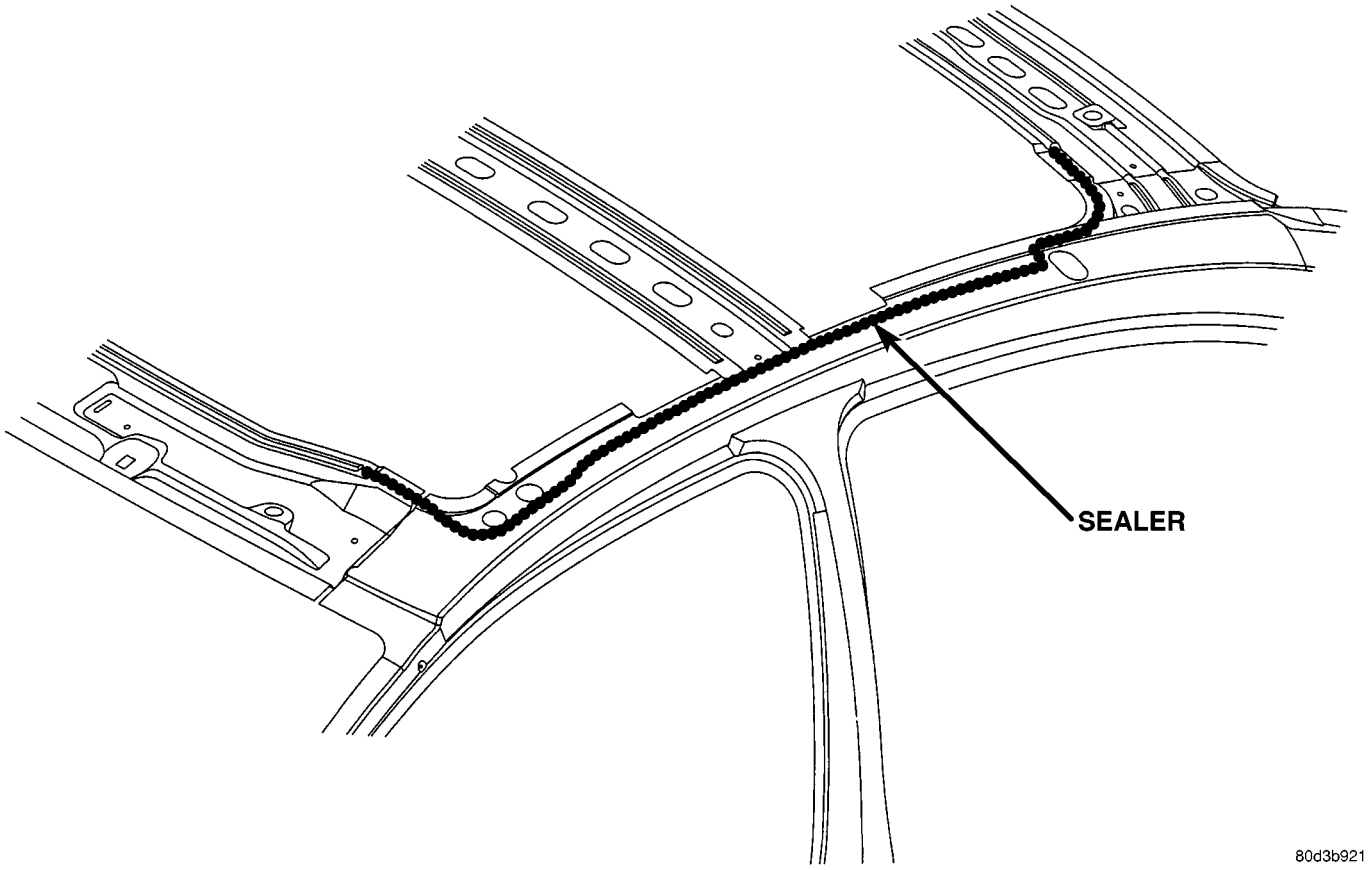

Fig. 100 ROOF PANEL, INNER QUARTER UPPER BODY SIDE APERTURE, UPPER WINDSHIELD FRAME & BACKLITE FRAME REINFORCEMENT

WELD LOCATIONS

SPECIFICATIONS

SPECIFICATIONS - WELD LOCATIONS - JR-27 AND JR-41

INDEX

DESCRIPTION	FIGURE
LOWER RADIATOR CROSSMEMBER, UPPER SUPPORT TO LOWER RADIATOR CROSSMEMBER LOWER SUPPORT	101
UPPER RADIATOR MOUNTING CROSSMEMBER TO HOOD LATCH REINFORCEMENT	102
FRONT ENGINE MOUNT SUPPORTS & RADIATOR BRACKET SUPPORT TO LOWER RADIATOR CROSSMEMBER	103
REAR FRONT SIDE RAIL TO REAR FRONT RAIL CAP TO SILL REINFORCEMENT	104
BUMPER EXTENSION, HEADLAMP SUPPORT RAIL TO REAR FRONT SIDE RAIL	105
REAR FRONT SIDE RAIL TO REAR FRONT RAIL CAP TO REAR FRONT SIDE RAIL PLATE	106
UPPER FRONT SUSPENSION MOUNTING CAP & REINFORCEMENT TO UPPER LOAD BEAM	107
FRONT SUSPENSION UPPER MOUNTING PANEL TO FRONT FENDER SHIELD	108
FRONT WHEELHOUSE TO FRONT SIDE RAIL AND HEADLAMP	109
FRONT SIDE RAIL REINFORCEMENT TO FRONT SIDE RAIL	110
FRONT SUSPENSION CROSSMEMBER BRACKET TO FRONT SIDE RAIL REINFORCEMENT TO FRONT SIDE RAIL	111
REAR FRONT SIDE RAIL TO REAR FRONT RAIL CAP	112
FRONT SUSPENSION CROSSMEMBER BRACKET TO LOWER RADIATOR SUPPORT & REAR FRONT SIDE RAIL TO FRONT SIDE RAIL	113
FRONT SUSPENSION UPPER MOUNTING CAP TO MOUNTING PANEL TO UPPER LOAD BEAM	114
FRONT WHEELHOUSE TO FRONT SIDE RAIL AND HEADLAMP	115
BRAKE BOOSTER REINFORCEMENT TO DASH PANEL & LOWER CONTROL PLENUM	116
DASH PANEL TO LOWER COWL PLENUM & UPPER COWL PLENUM TO COWL PLENUM CLOSURE	117
UPPER COWL PLENUM AND DASH PANEL TO LOWER COWL PLENUM	118
COWL SIDE PANEL TO DASH PANEL TO LOWER COWL PLENUM	119
FRONT FLOOR PAN TO DASH PANEL	120
LOWER COWL PLENUM TO INNER LOAD BEAM BUMPER ATTACHING REINFORCEMENT	121
SHOCK TOWER EXTENSION TO DASH PANEL	122
FRONT CONSOLE MOUNTING BRACKET TO FRONT FLOOR PAN	123
SEAT TRACK CROSSMEMBER & FRONT FLOOR PAN TO INNER BODY SIDE SILL	124
FRONT SEAT TRACK CROSSMEMBER TO FRONT FLOOR PAN	125
PARK BRAKE BRACKET & SHIFTER MOUNTING STUDS TO FRONT CONSOLE MOUNTING BRACKET	126
SEAT MOUNTING CROSSMEMBER TO TUNNEL REINFORCEMENT TO FRONT CONSOLE MOUNTING BRACKET	127
WIRING HARNESS WELD STUDS & FUEL TANK STRAP BRACKET TO REAR FLOOR PAN	128
CENTER SEAT BELT REINFORCEMENT TO SEAT BELT ANCHOR TO REAR FLOOR PAN	129

WELD LOCATIONS (Continued)

DESCRIPTION	FIGURE
SPARE WHEEL ANCHOR REINFORCEMENT FUEL TANK SUPPORT BRACKET TO REAR FLOOR PAN	130
WELD STUD TO SEAT BELT ANCHOR REINFORCEMENT & SPARE WHEEL BRACKET	131
REAR SEAT CROSSMEMBER REINFORCEMENT TO REAR FLOOR PAN FRONT CROSSMEMBER	132
REAR RAIL EXTENSION BODY SIDE APERTURE BRACKET, REAR FLOOR PAN CROSSMEMBER TO INNER BODY SIDE SILL EXTENSION	133
CENTER FLOOR PAN CROSSMEMBER TO REAR FLOOR PAN SIDE RAIL REAR EXTENSION TO CENTER FLOOR SIDE RAIL	134
CENTER FLOOR PAN SIDE RAIL TO CENTER SIDE RAIL EXTENSION TO REAR FLOOR PAN SIDE RAIL	135
CENTER FLOOR REAR SUSPENSION CROSSMEMBER TO CENTER SIDE RAIL EXTENSION TO REAR SIDE RAIL	136
REAR FLOOR PAN FRONT CROSSMEMBER TO REAR FLOOR PAN TO FRONT FLOOR PAN	137
FUEL TANK SUPPORT TO REAR SUSPENSION CROSSMEMBER & SIDE RAIL EXTENSION TO REAR FLOOR PAN	138
REAR SIDE RAIL EXTENSION TO CENTER FLOOR PAN SIDE RAIL & REAR SUSPENSION CROSSMEMBER TO REAR FLOOR PAN	139
REAR SIDE RAIL & REAR SUSPENSION CROSSMEMBER TO REAR FLOOR PAN	140
INNER SILL EXTENSION TO BODY SIDE APERTURE BRACKET TO REAR FLOOR PAN	141
INNER WINDSHIELD FRAME TO OUTER WINDSHIELD FRAME/HINGE PILLAR REINFORCEMENT TO SILL BEAM	142
FRONT RAIL REAR CAP TO DASH PANEL TO FLOOR PAN	143
FRONT SIDE RAIL & REAR CAP TO FRONT FLOOR PAN	144
FRONT SEAT BELT ANCHORAGE TO INNER BODY SILL	145
FRONT FLOOR PAN RAIL	146
ENGINE MOUNT TAPPING PLATE & BUMPER EXTENSION TO FRONT SIDE RAIL	147
BUMPER EXTENSION, FRONT RAIL REINFORCEMENT & SPACERS TO FRONT SIDE RAIL	148
RIGHT UPPER FRONT SUSPENSION MOUNT, UPPER FRONT SUSPENSION MOUNT	149
UPPER FRONT SUSPENSION REINFORCEMENT & UPPER FRONT SUSPENSION MOUNT TO UPPER FRONT SUSPENSION MOUNT CAP	150
SWAY BAR BRACKET TO SIDE RAIL PLATE & FRONT SIDE RAIL REINFORCEMENT TO FRONT SIDE RAIL REAR	151
FRONT SIDE RAIL REINFORCEMENT/SWAY BAR BRACKET TO TOPPING PLATE/FRONT SUSPENSION RETAINER TO FRONT SIDE RAIL PLATE	152
BUMPER EXTENSION TO FRONT BUMPER MOUNTING BRACKET FRONT SIDE RAIL PLATE TO FRONT SIDE RAIL	153
WINDSHIELD WIPER TAPPING PLATE TO WINDSHIELD WIPER CENTER ATTACHING PLATE & LOWER WIPER MODULE PLENUM BRACKET	154
WHEELHOUSE DEADENER PANEL & DASH PANEL DEADNER PANEL TO DASH PANEL	155
PLENUM LOWER SUPPORT PLENUM CLOSURE & WINDSHIELD WIPER SUPPORT TO LOWER COWL PLENUM	156
HEADLAMP MOUNTING REINFORCEMENT TO HEADLAMP MOUNTING PANEL	157
FRONT FLOOR PAN RAIL EXTENSION & REINFORCEMENT TO FRONT FLOOR PAN RAIL	158

WELD LOCATIONS (Continued)

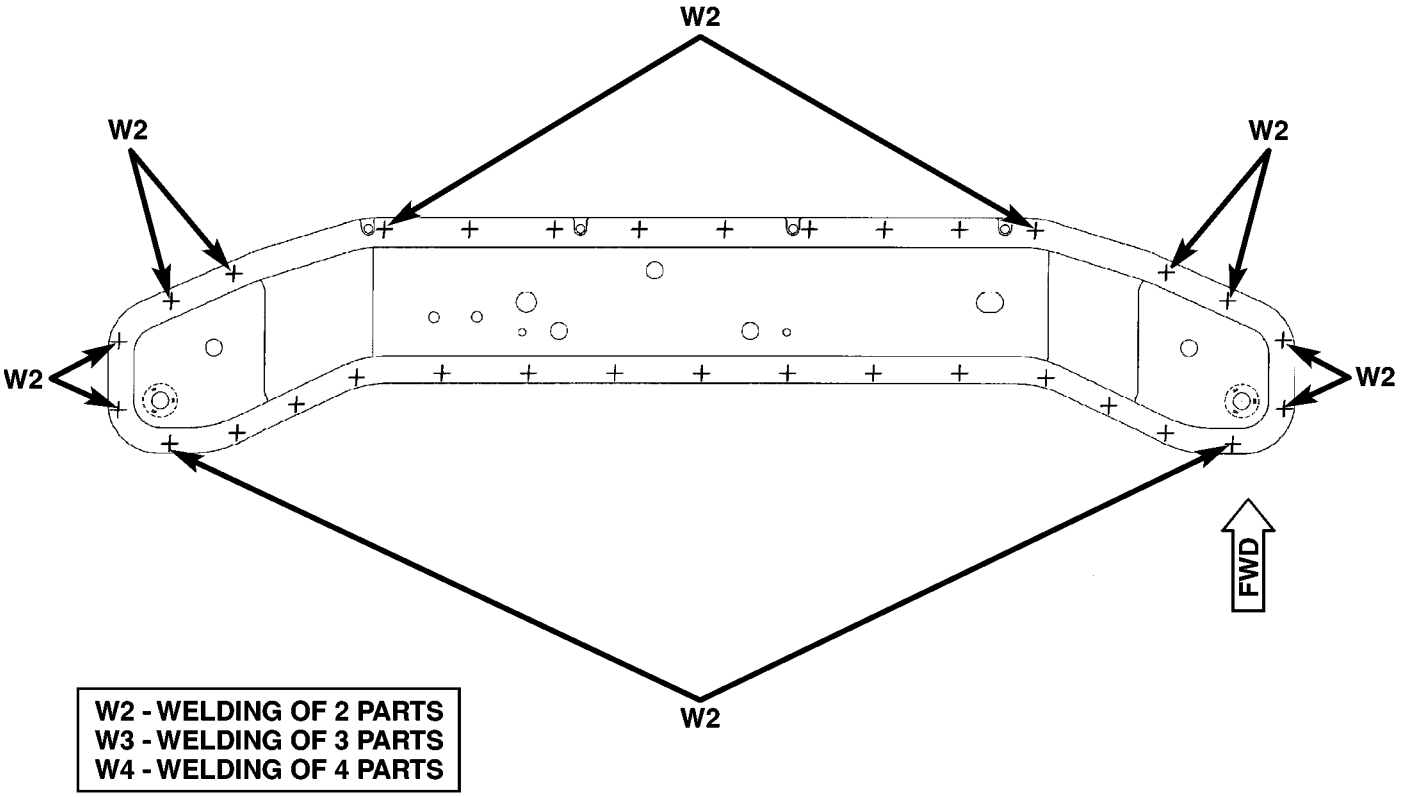

80c622b0

Fig. 101 LOWER RADIATOR CROSSMEMBER, UPPER SUPPORT TO LOWER RADIATOR CROSSMEMBER LOWER SUPPORT

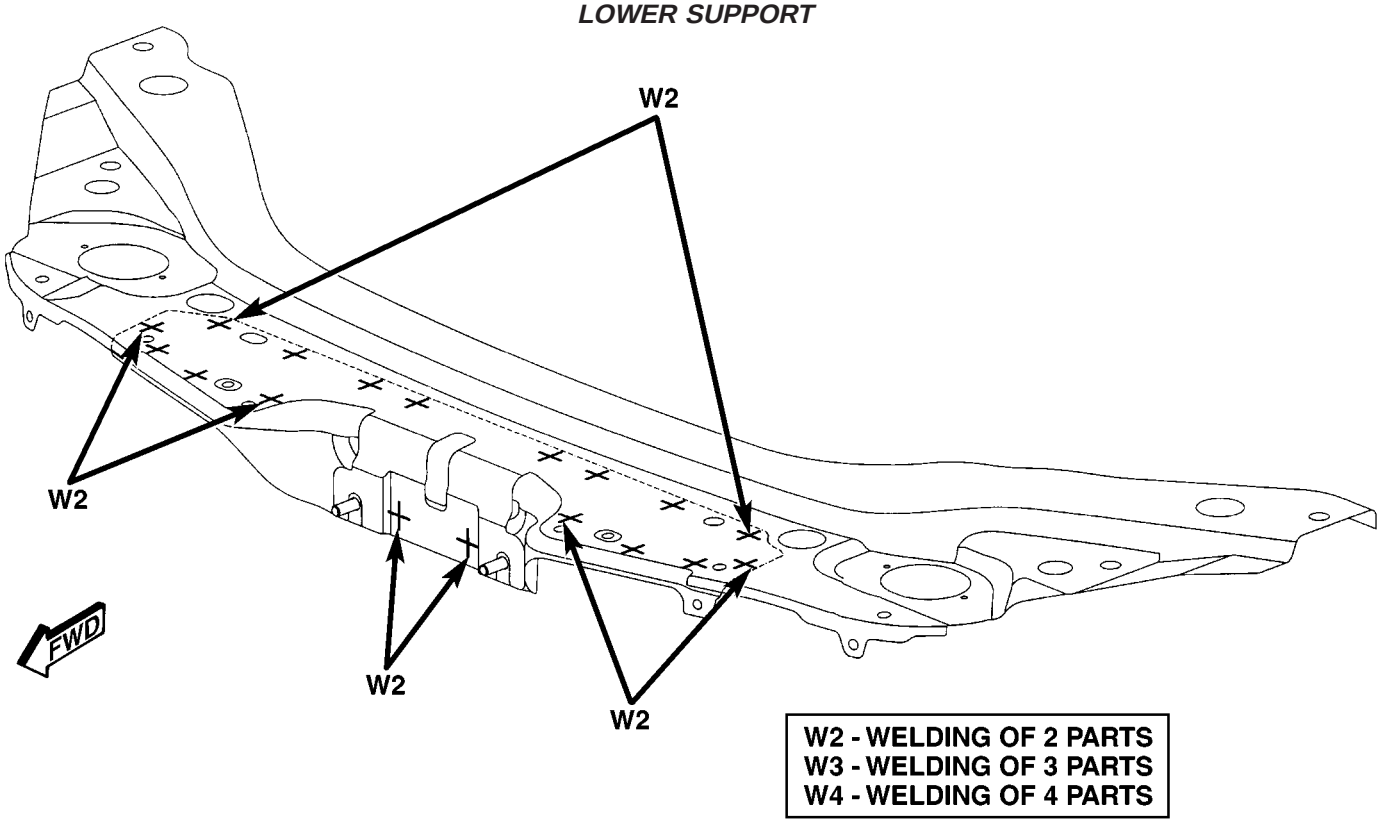

80c622b1

Fig. 102 UPPER RADIATOR MOUNTING CROSSMEMBER TO HOOD LATCH REINFORCEMENT

WELD LOCATIONS (Continued)

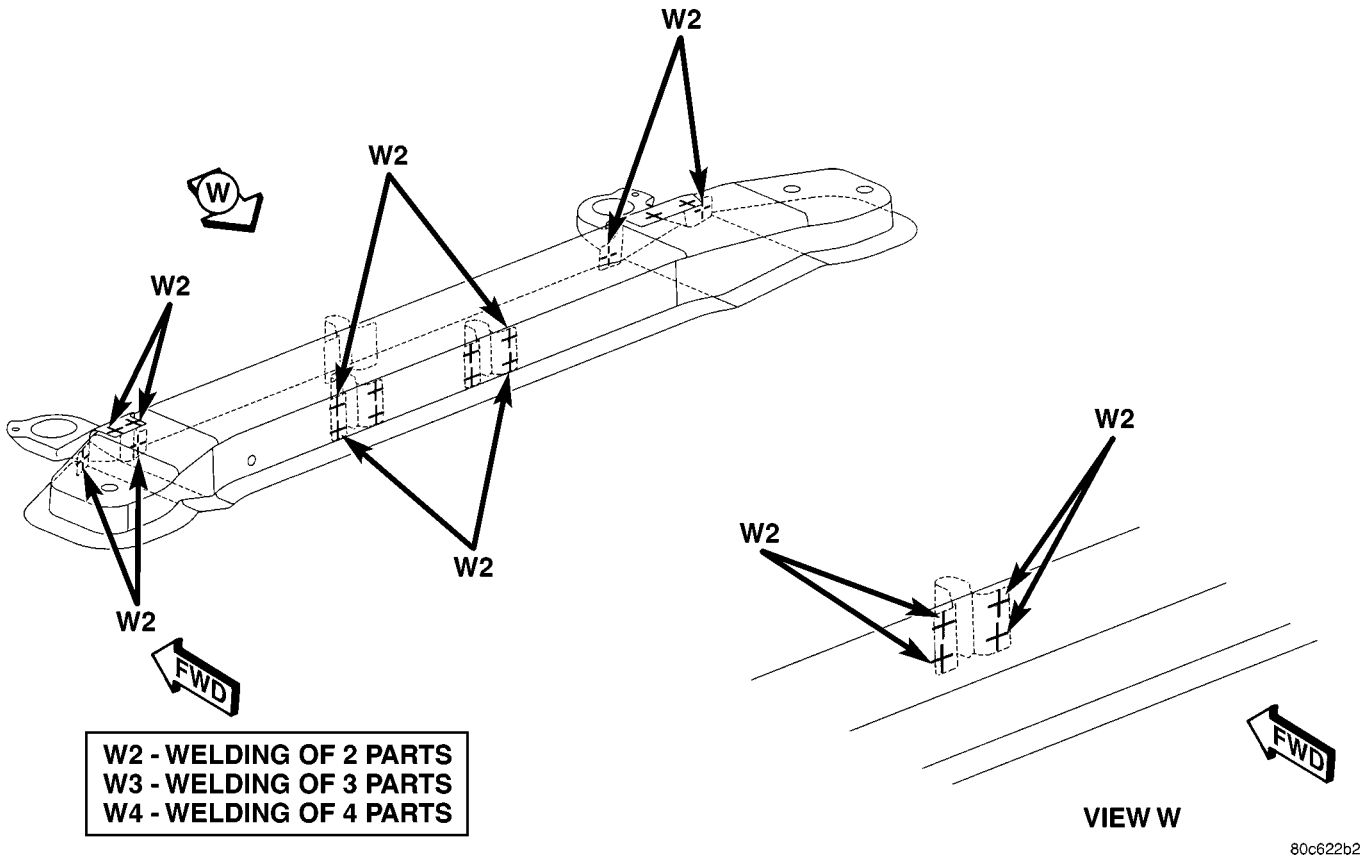

Fig. 103 FRONT ENGINE MOUNT SUPPORTS & RADIATOR BRACKET SUPPORT TO LOWER RADIATOR CROSSMEMBER

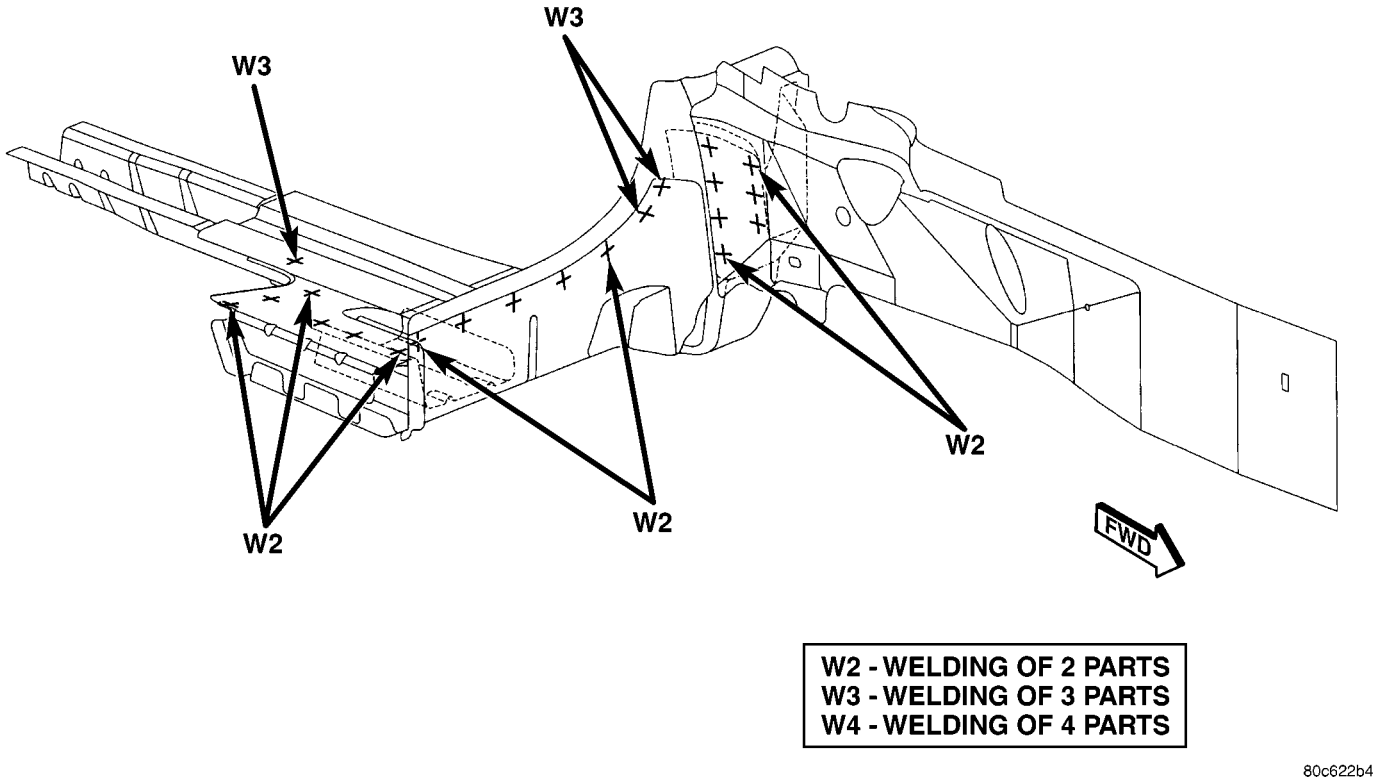

Fig. 104 REAR FRONT SIDE RAIL TO REAR FRONT RAIL CAP TO SILL REINFORCEMENT

WELD LOCATIONS (Continued)

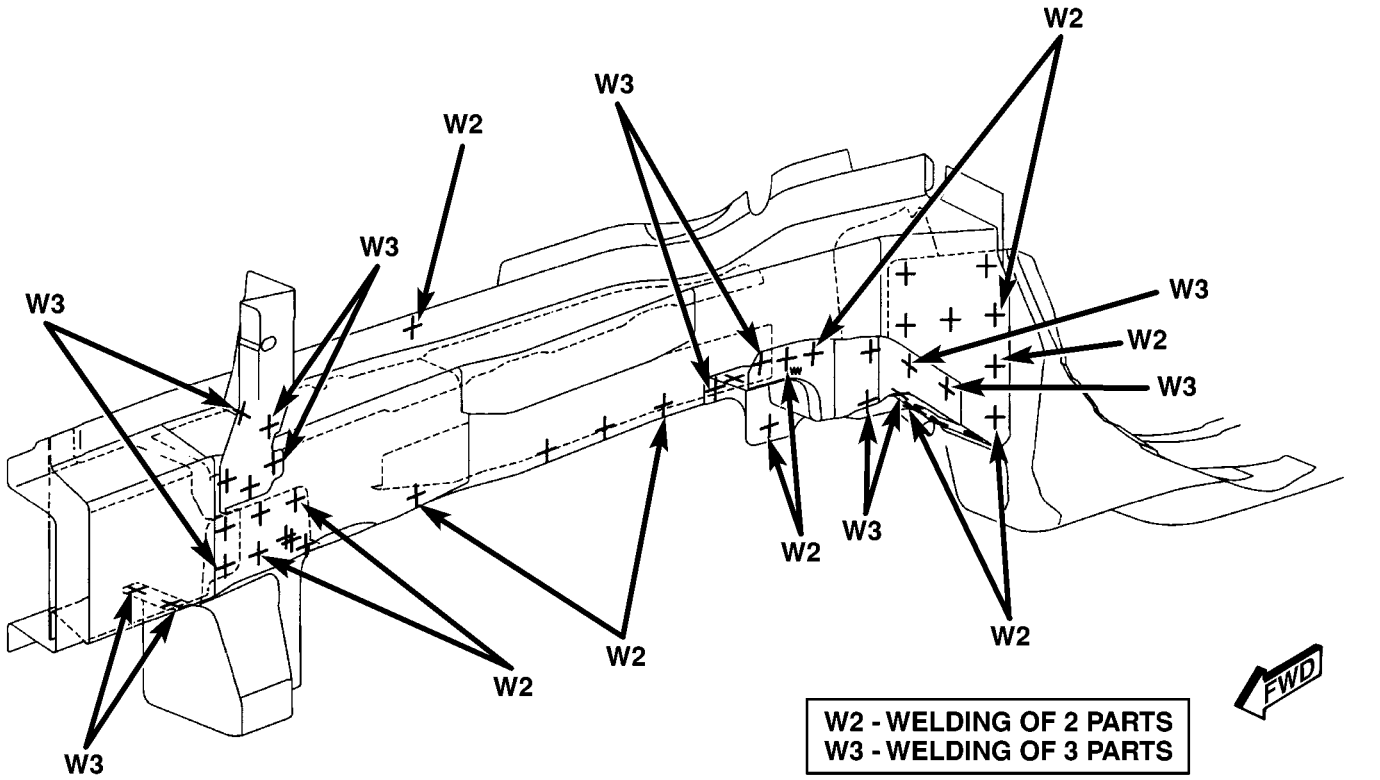

Fig. 105 BUMPER EXTENSION, HEADLAMP SUPPORT RAIL, TO REAR FRONT SIDE RAIL

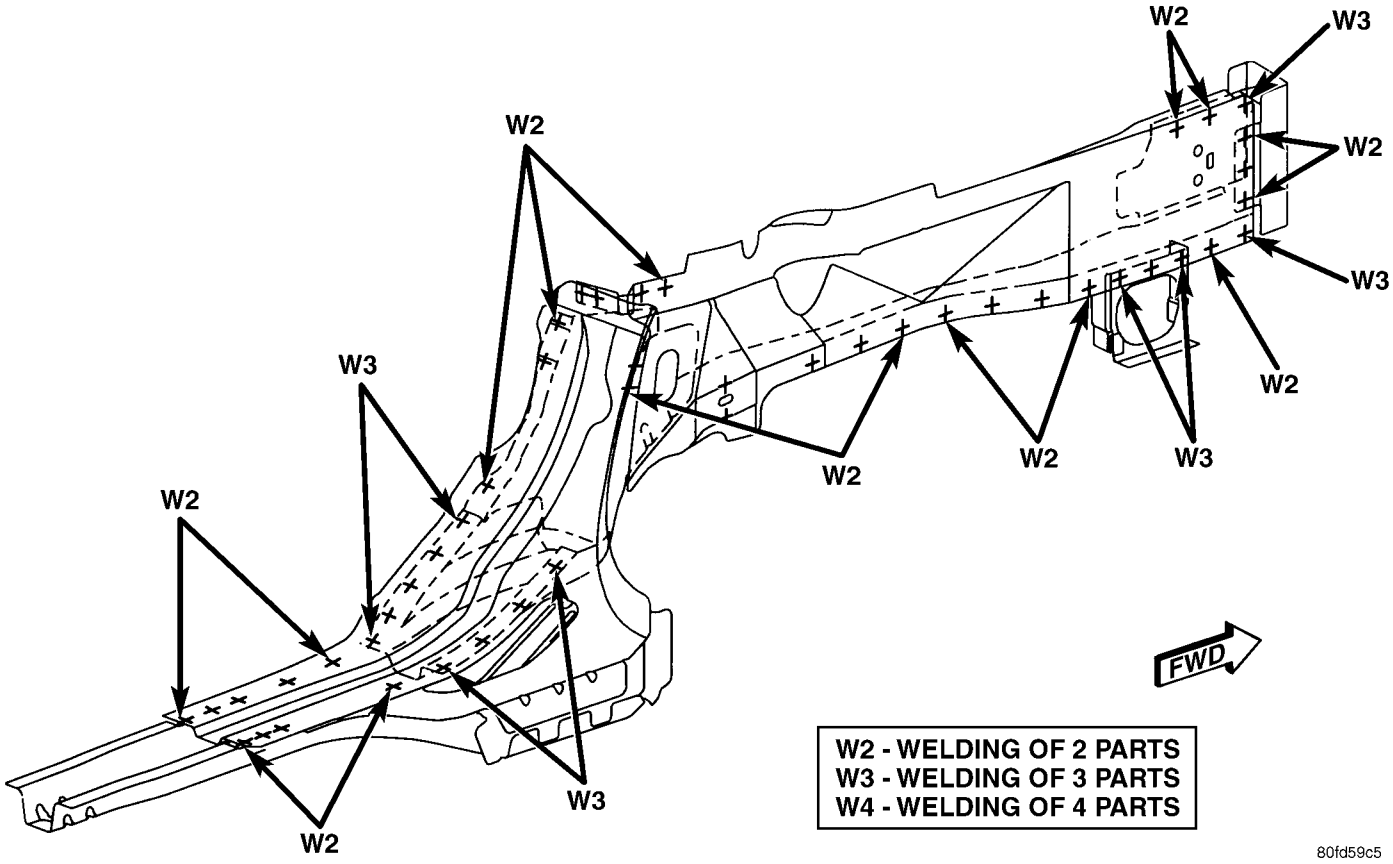

Fig. 106 REAR FRONT SIDE RAIL TO REAR FRONT RAIL CAP TO REAR FRONT SIDE RAIL PLATE

WELD LOCATIONS (Continued)

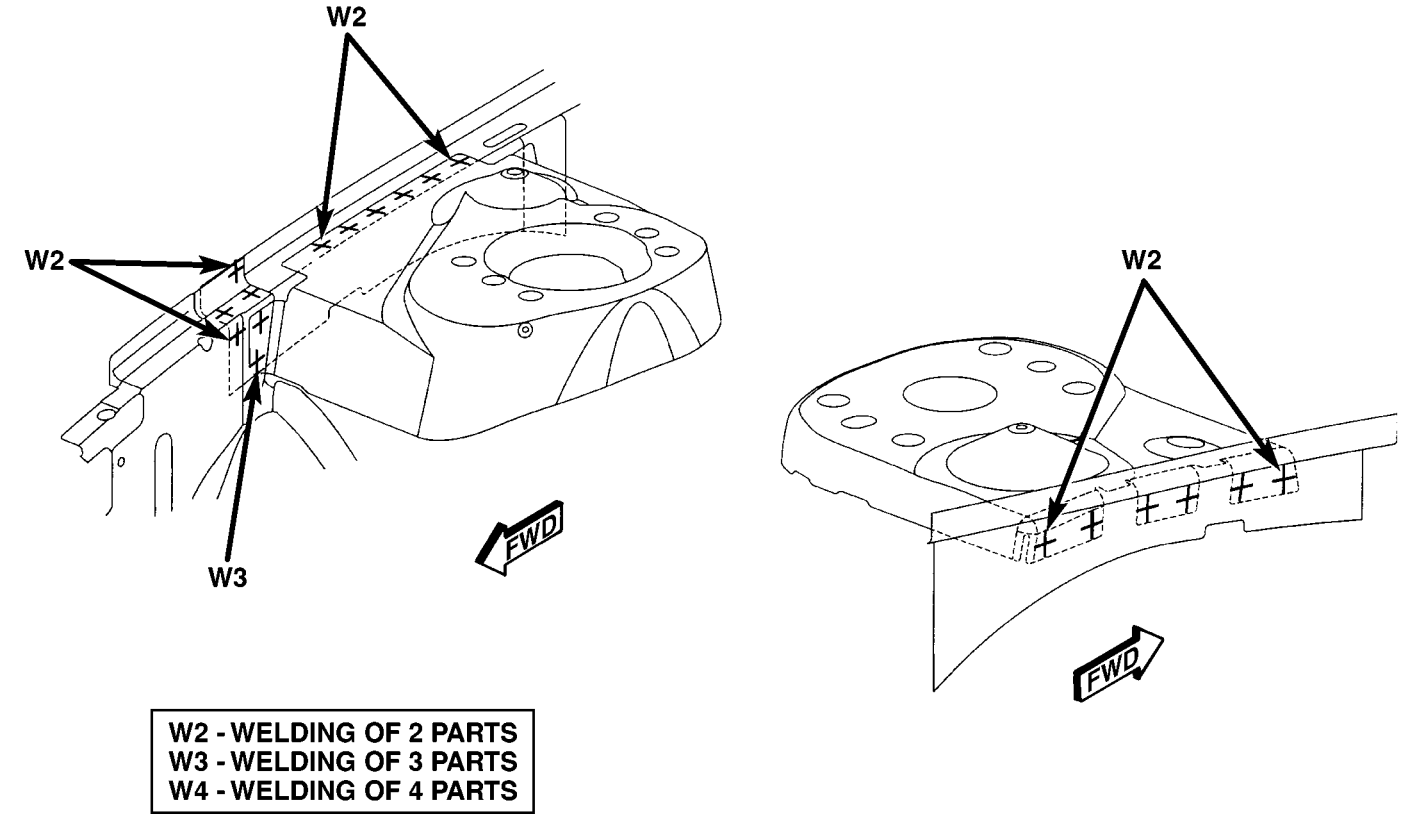

Fig. 107 UPPER FRONT SUSPENSION MOUNTING CAP & REINFORCEMENT TO UPPER LOAD BEAM

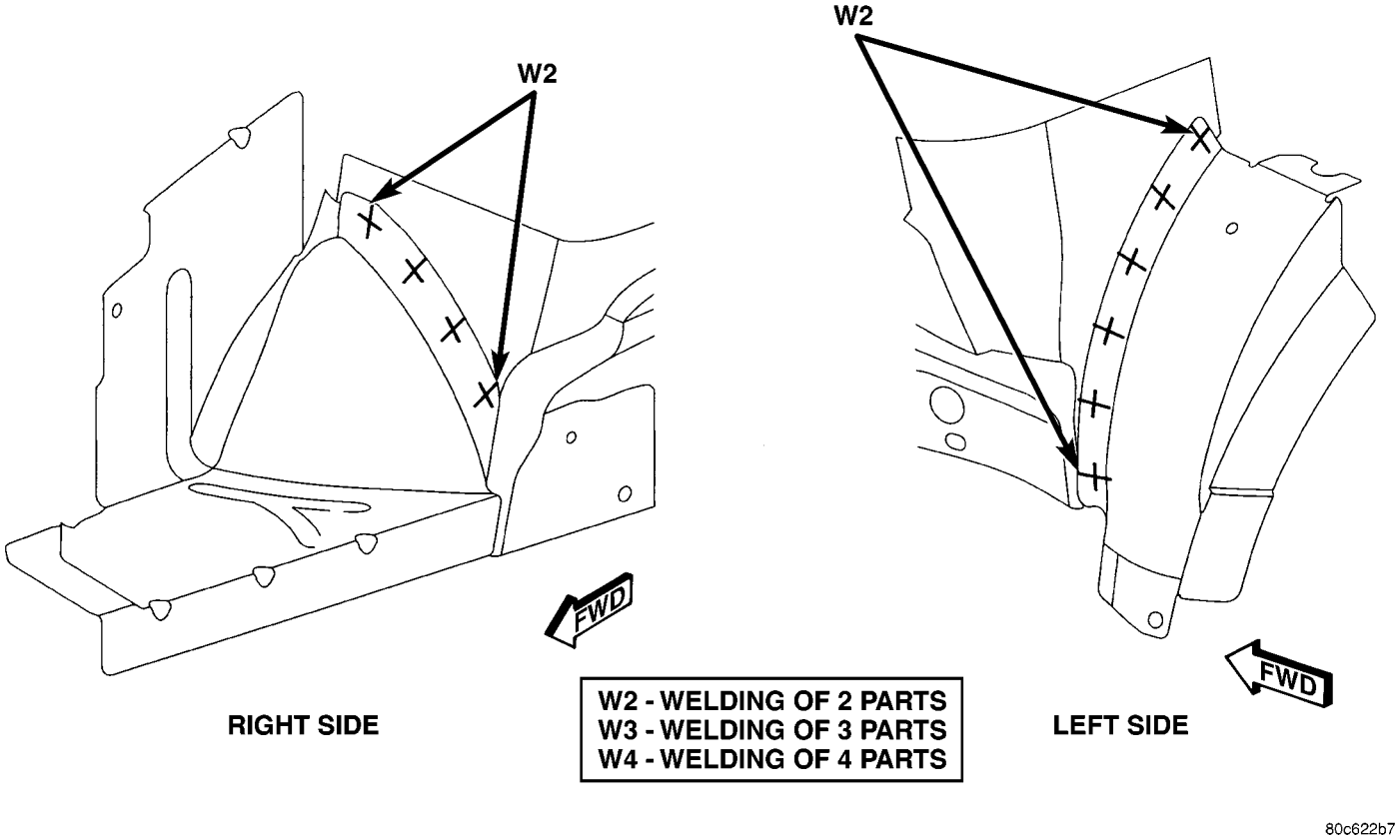

Fig. 108 FRONT SUSPENSION UPPER MOUNTING PANEL TO FRONT FENDER SHIELD

WELD LOCATIONS (Continued)

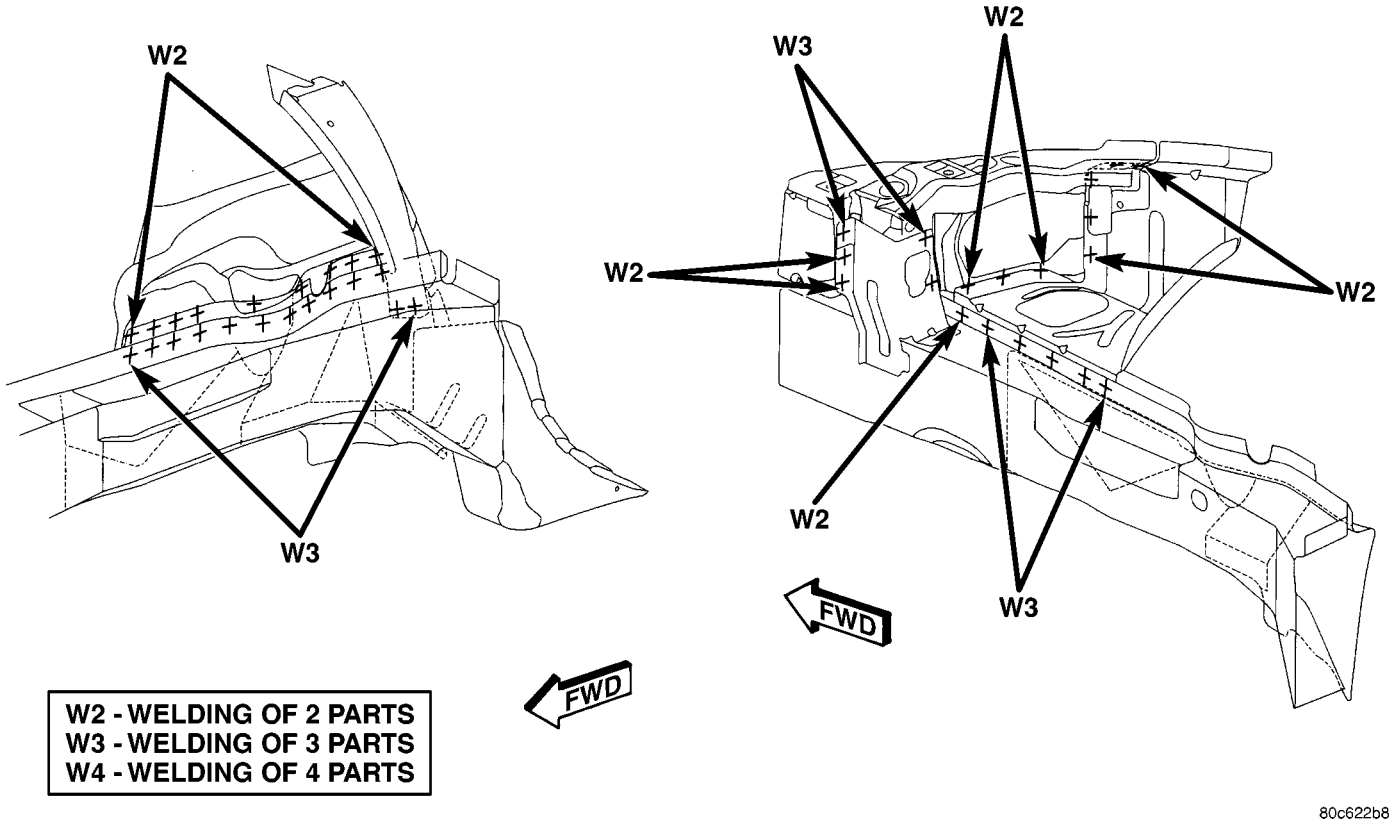

Fig. 109 FRONT WHEELHOUSE TO FRONT SIDE RAIL AND HEADLAMP

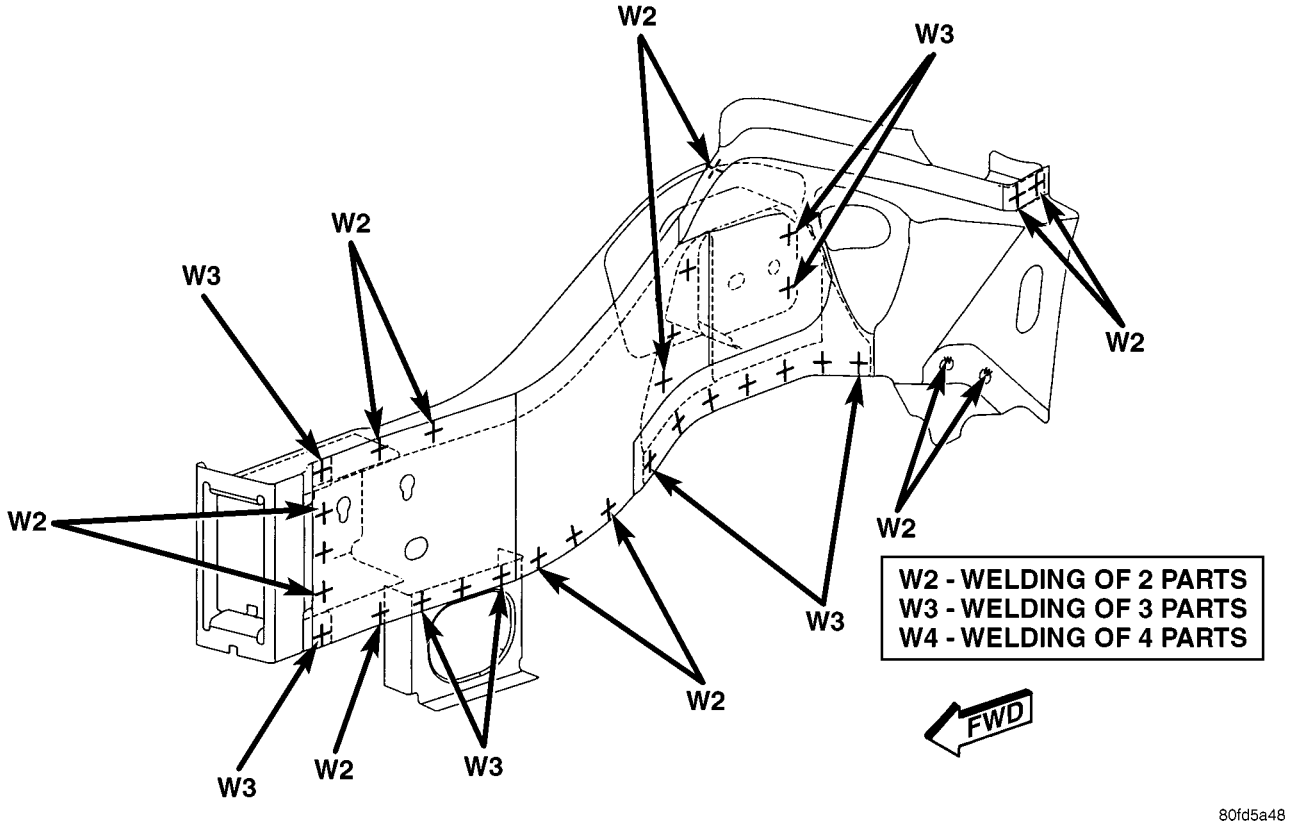

Fig. 110 FRONT SIDE RAIL REINFORCEMENT TO FRONT SIDE RAIL

WELD LOCATIONS (Continued)

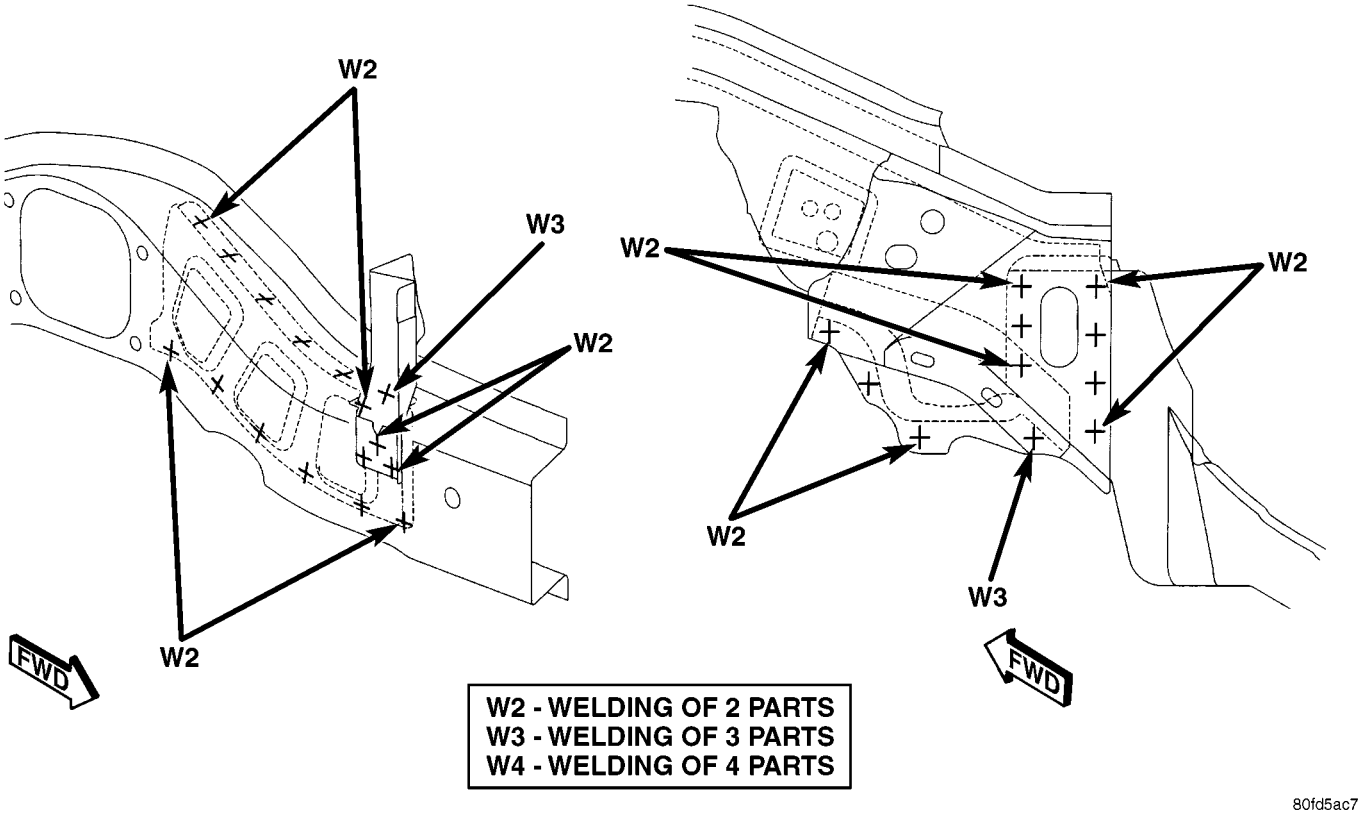

Fig. 111 FRONT SUSPENSION CROSSMEMBER BRACKET TO FRONT SIDE RAIL REINFORCEMENT TO FRONT S

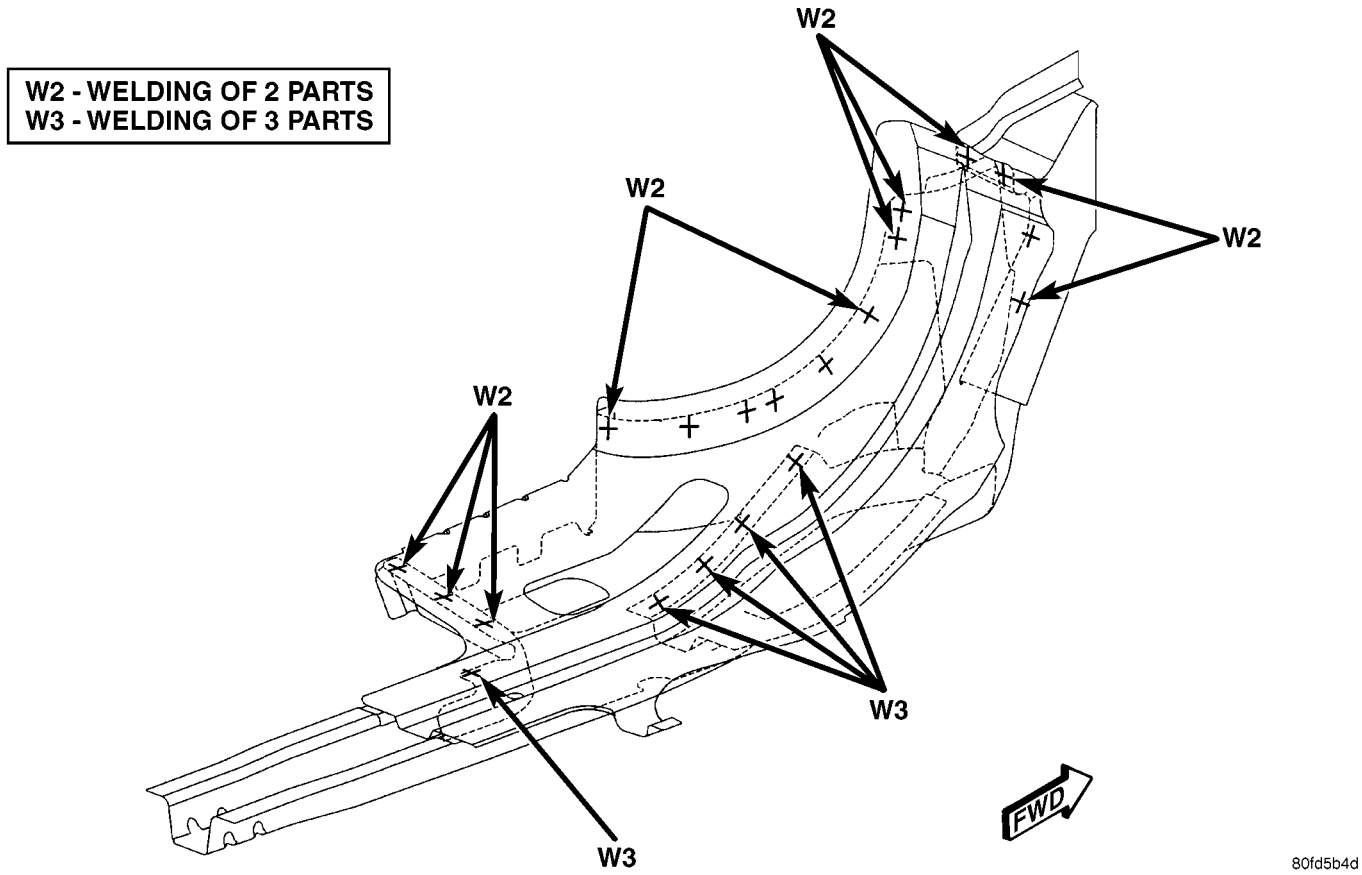

Fig. 112 REAR FRONT SIDE RAIL TO REAR FRONT RAIL CAP

WELD LOCATIONS (Continued)

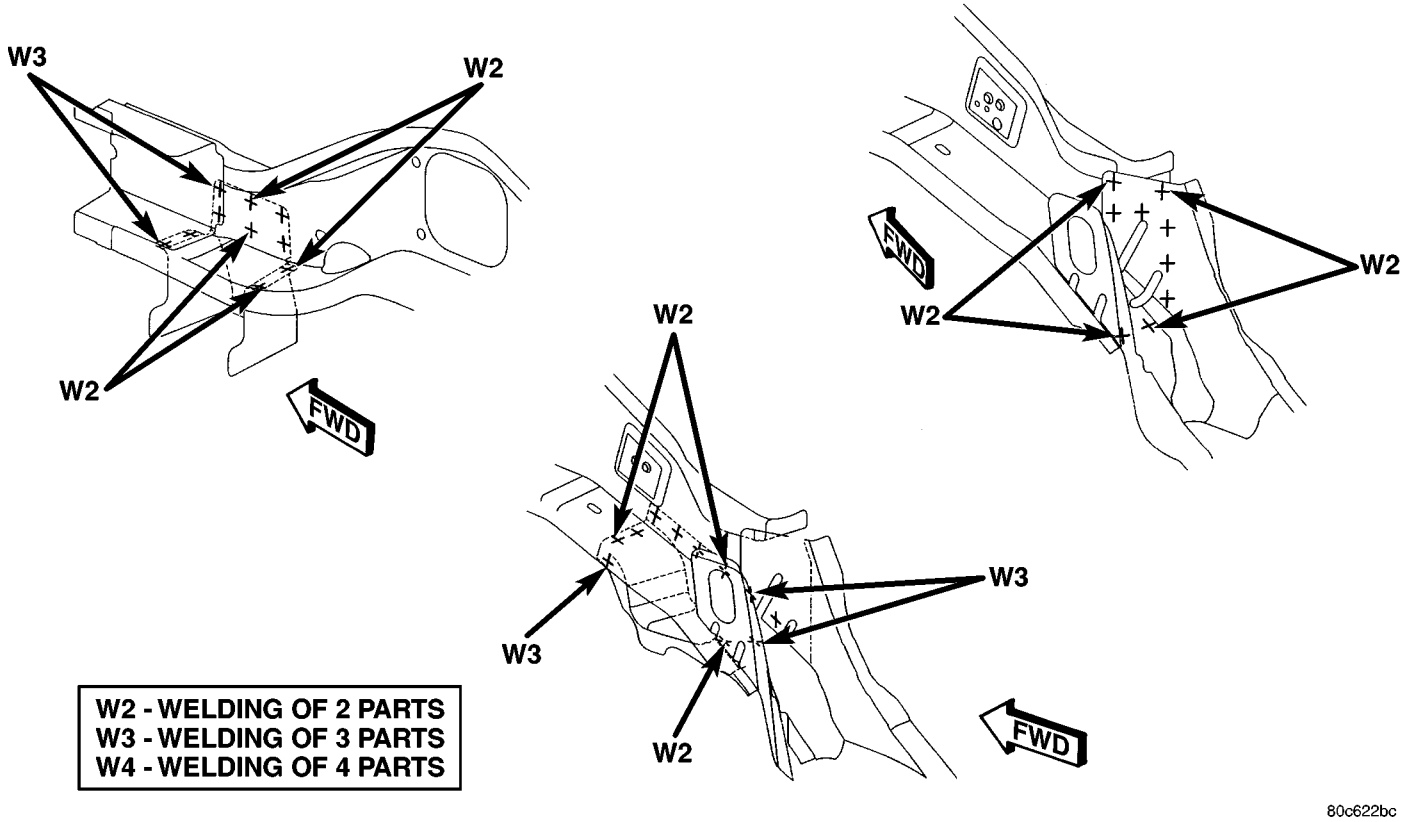

Fig. 113 FRONT SUSPENSION CROSSMEMBER BRACKET TO LOWER RADIATOR SUPPORT & REAR FRONT SIDE RAIL TO FRONT SIDE RAIL

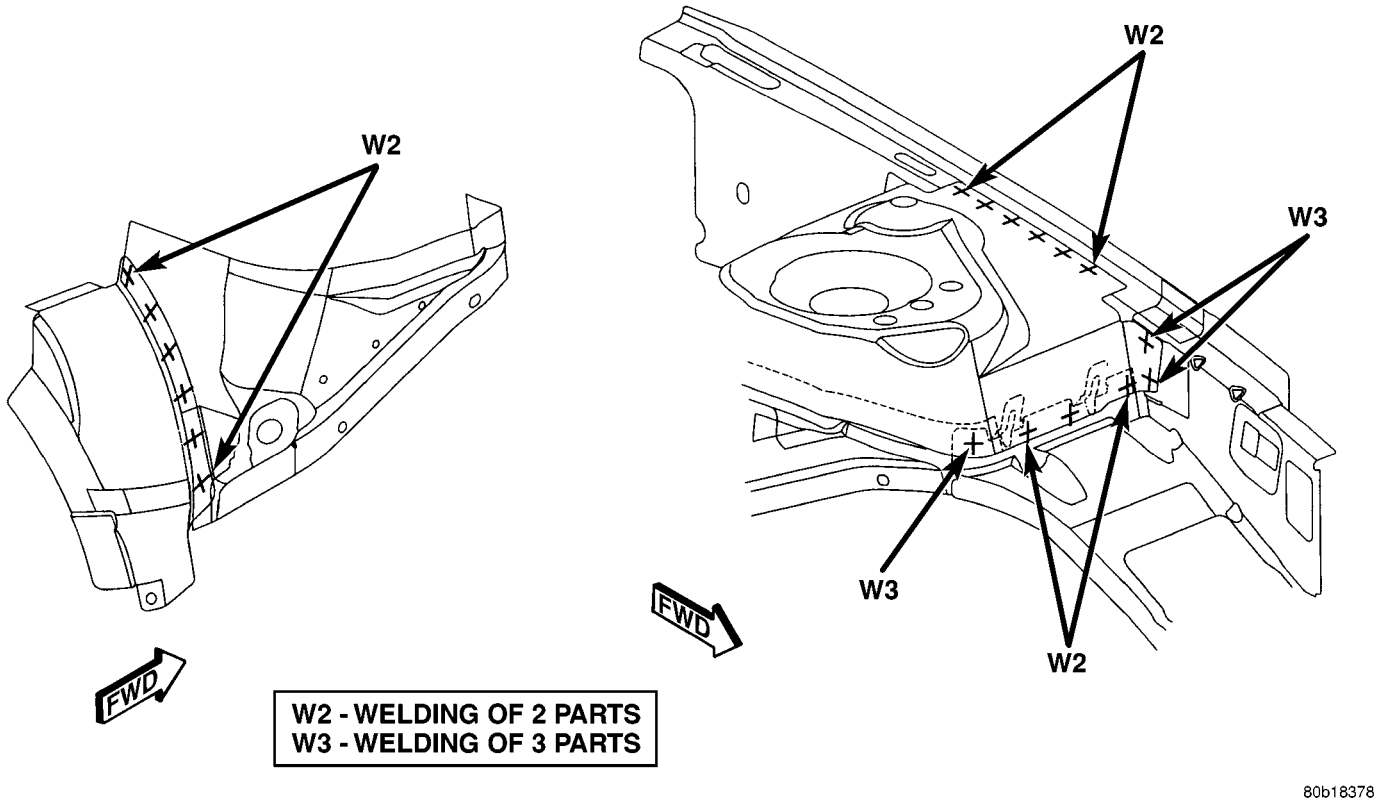

Fig. 114 FRONT SUSPENSION UPPER MOUNTING CAP TO MOUNTING PANEL TO UPPER LOAD BEAM

WELD LOCATIONS (Continued)

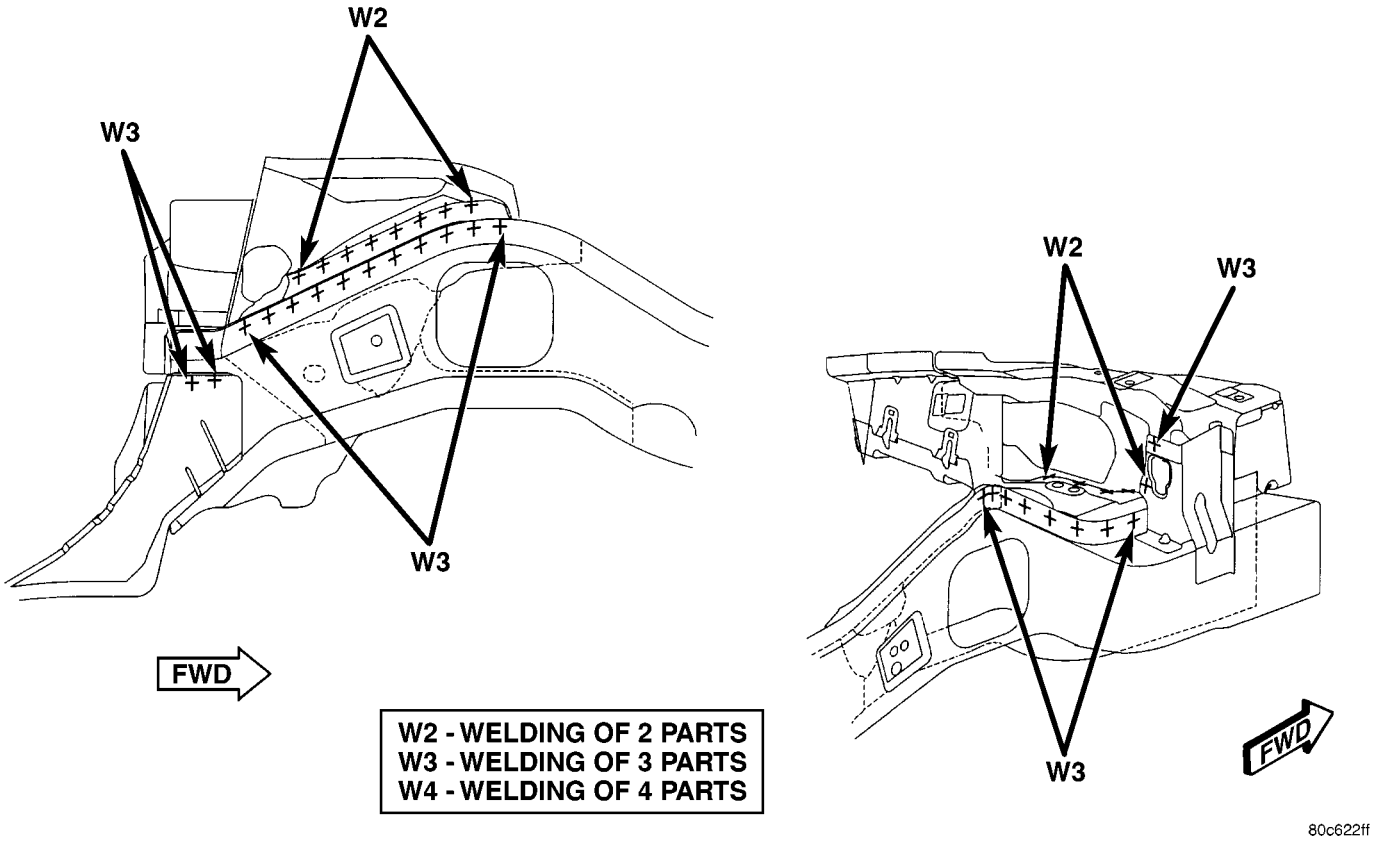

Fig. 115 FRONT WHEELHOUSE TO FRONT SIDE RAIL AND HEADLAMP

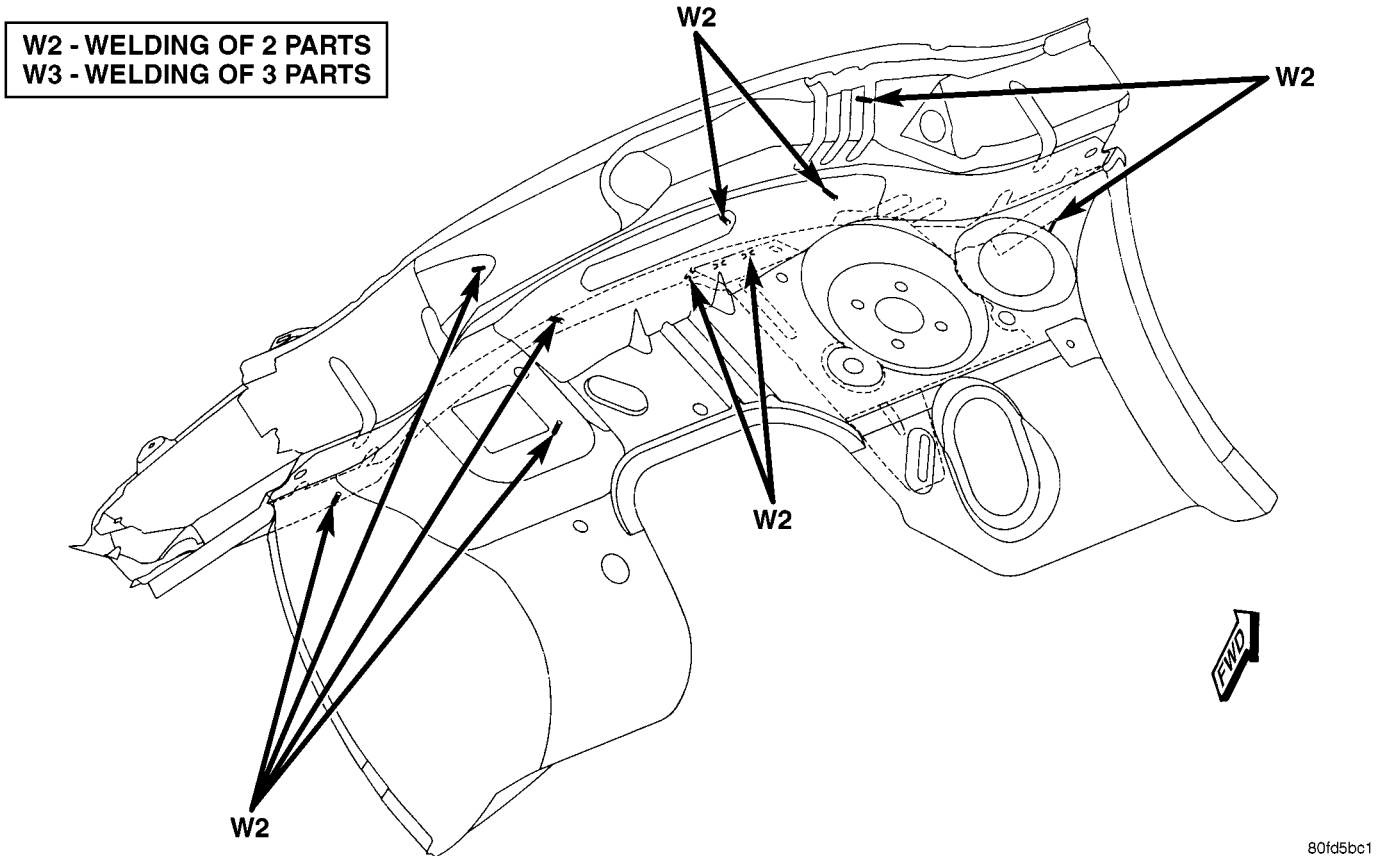

Fig. 116 BRAKE BOOSTER REINFORCEMENT TO DASH PANEL & LOWER CONTROL PLENUM

WELD LOCATIONS (Continued)

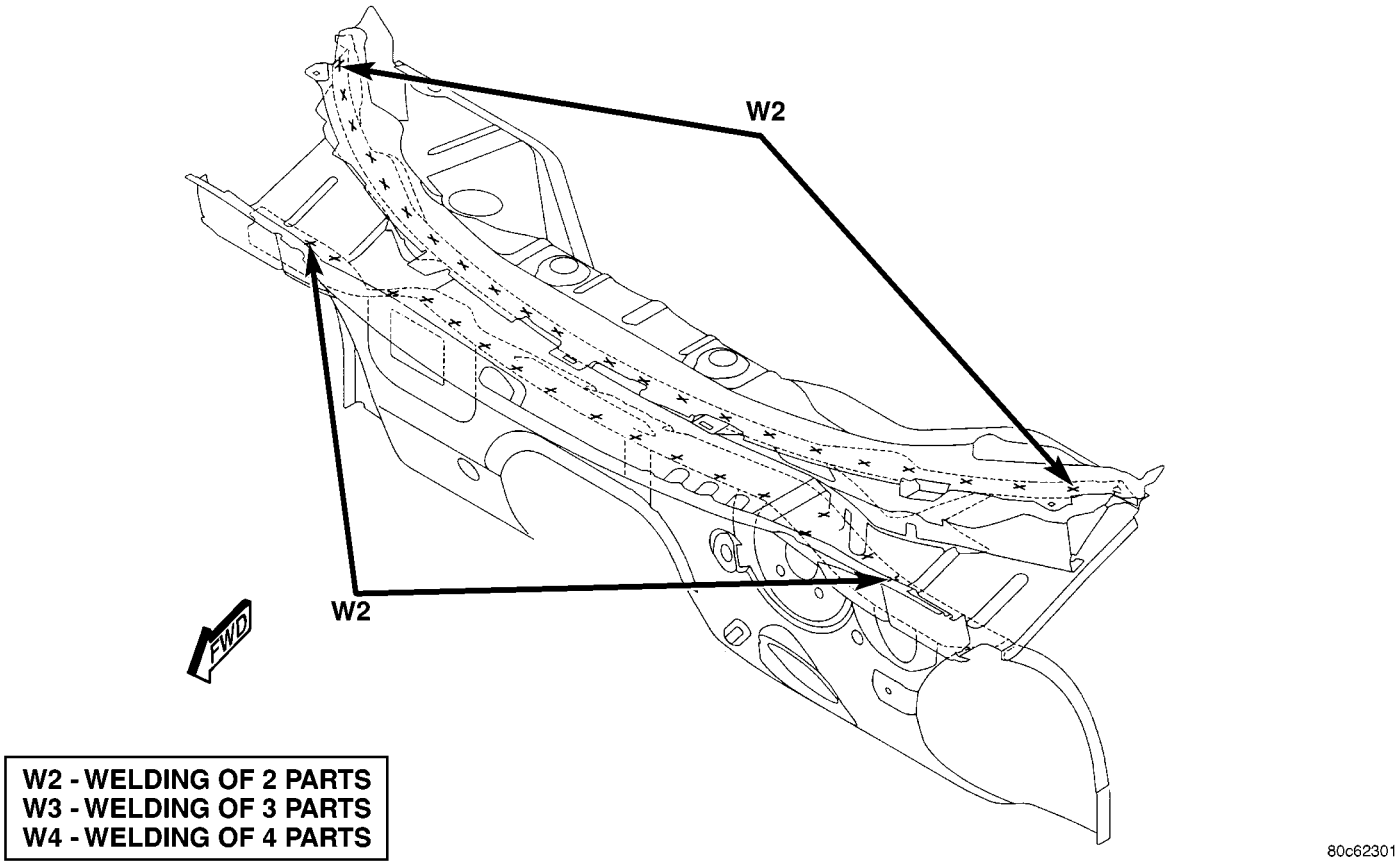

Fig. 117 DASH PANEL TO LOWER COWL PLENUM & UPPER COWL PLENUM TO COWL PLENUM CLOSURE

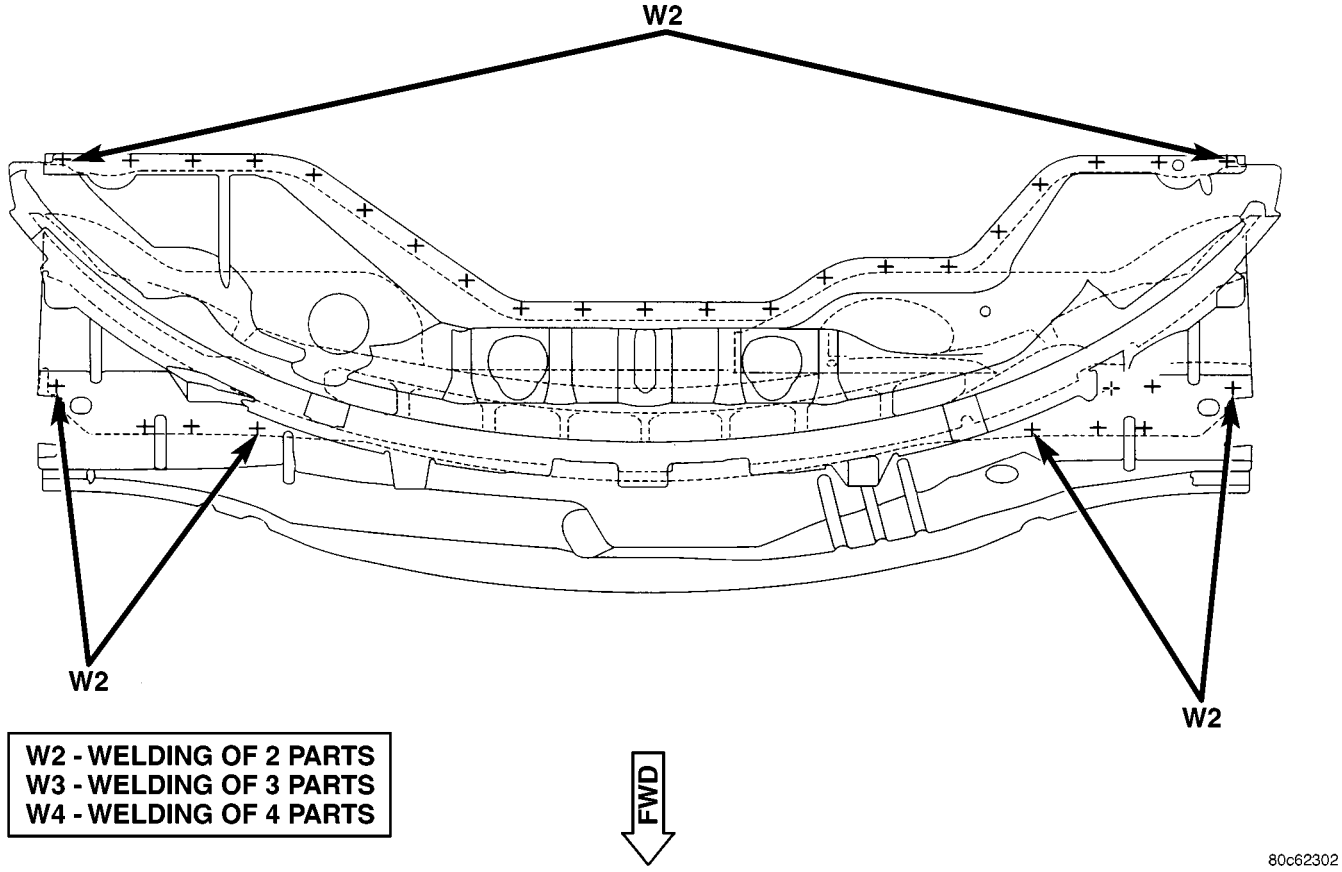

Fig. 118 UPPER COWL PLENUM AND DASH PANEL TO LOWER COWL PLENUM

WELD LOCATIONS (Continued)

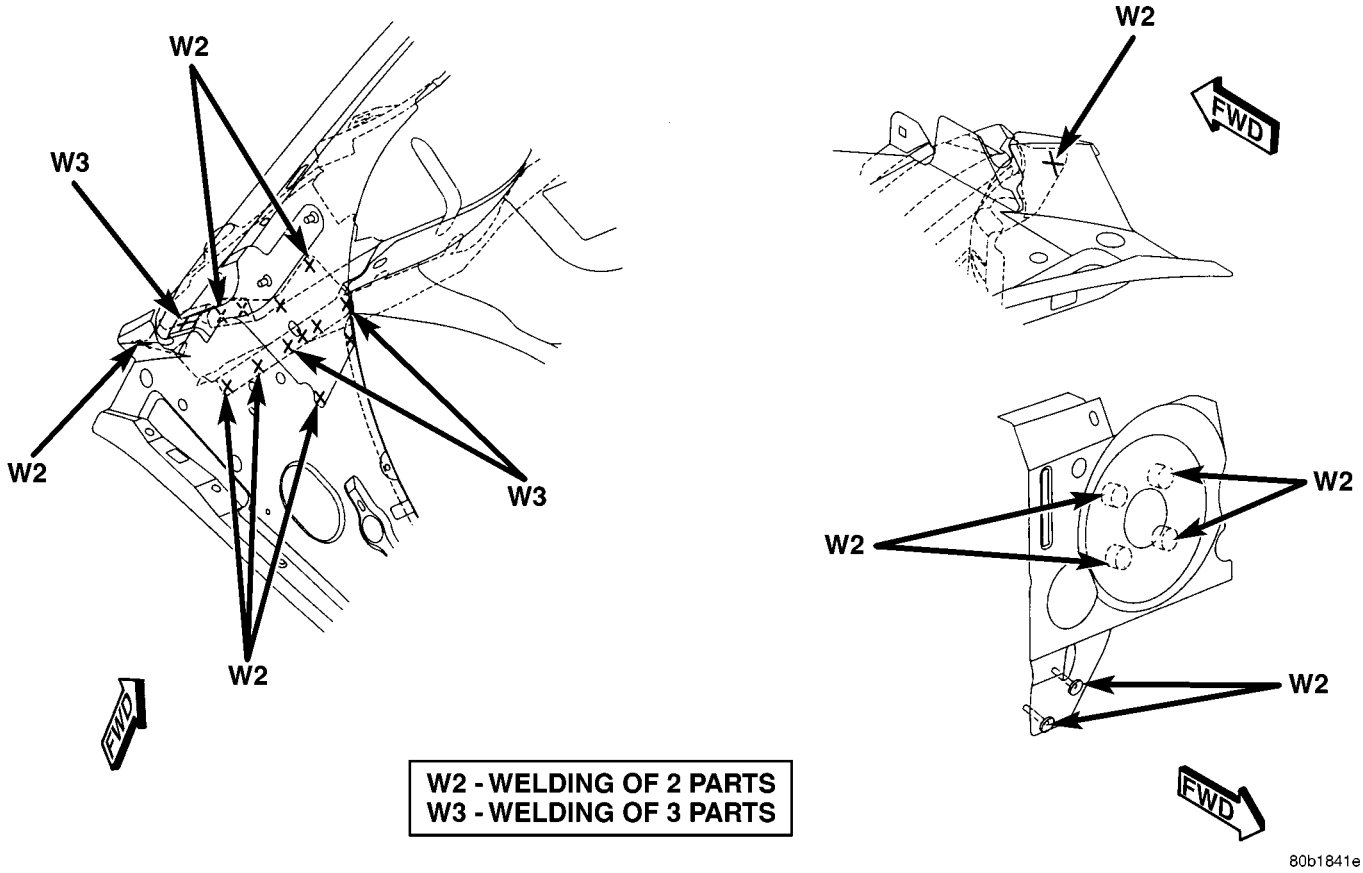

Fig. 119 COWL SIDE PANEL TO DASH PANEL TO LOWER COWL PLENUM

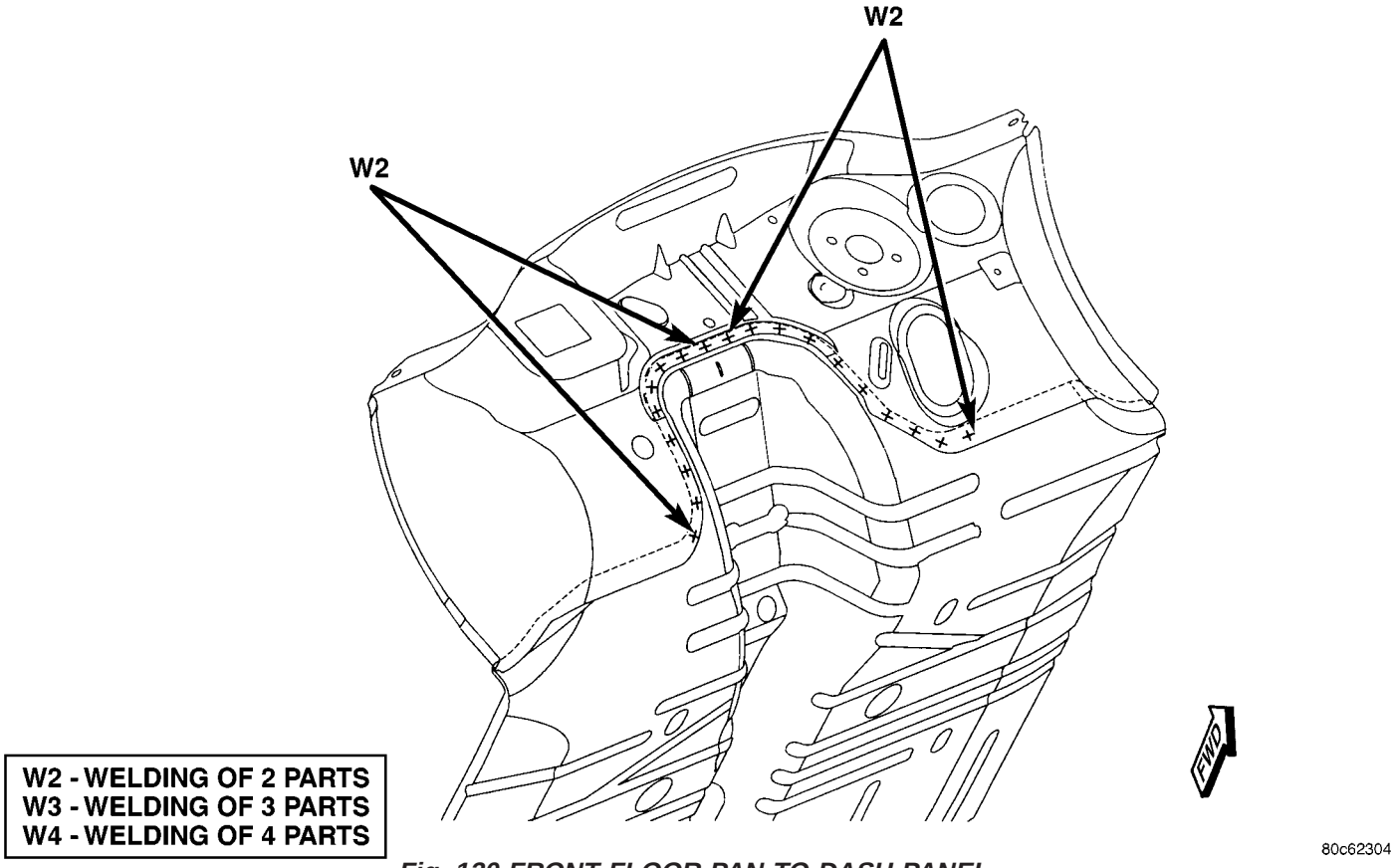

Fig. 120 FRONT FLOOR PAN TO DASH PANEL

WELD LOCATIONS (Continued)

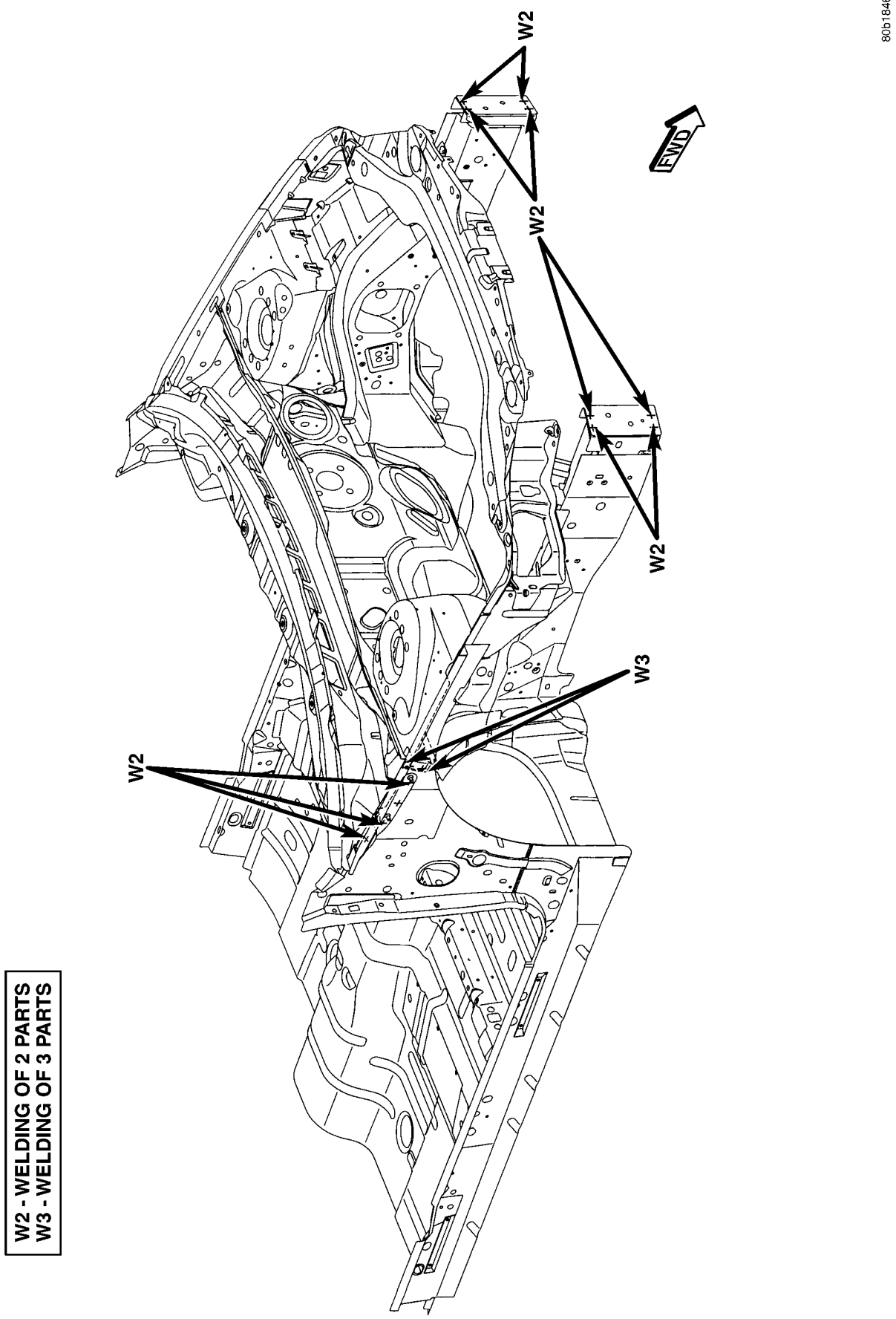

Fig. 121 LOWER COWL PLENUM TO INNER LOAD BEAM BUMPER ATTACHING REINFORCEMENT

WELD LOCATIONS (Continued)

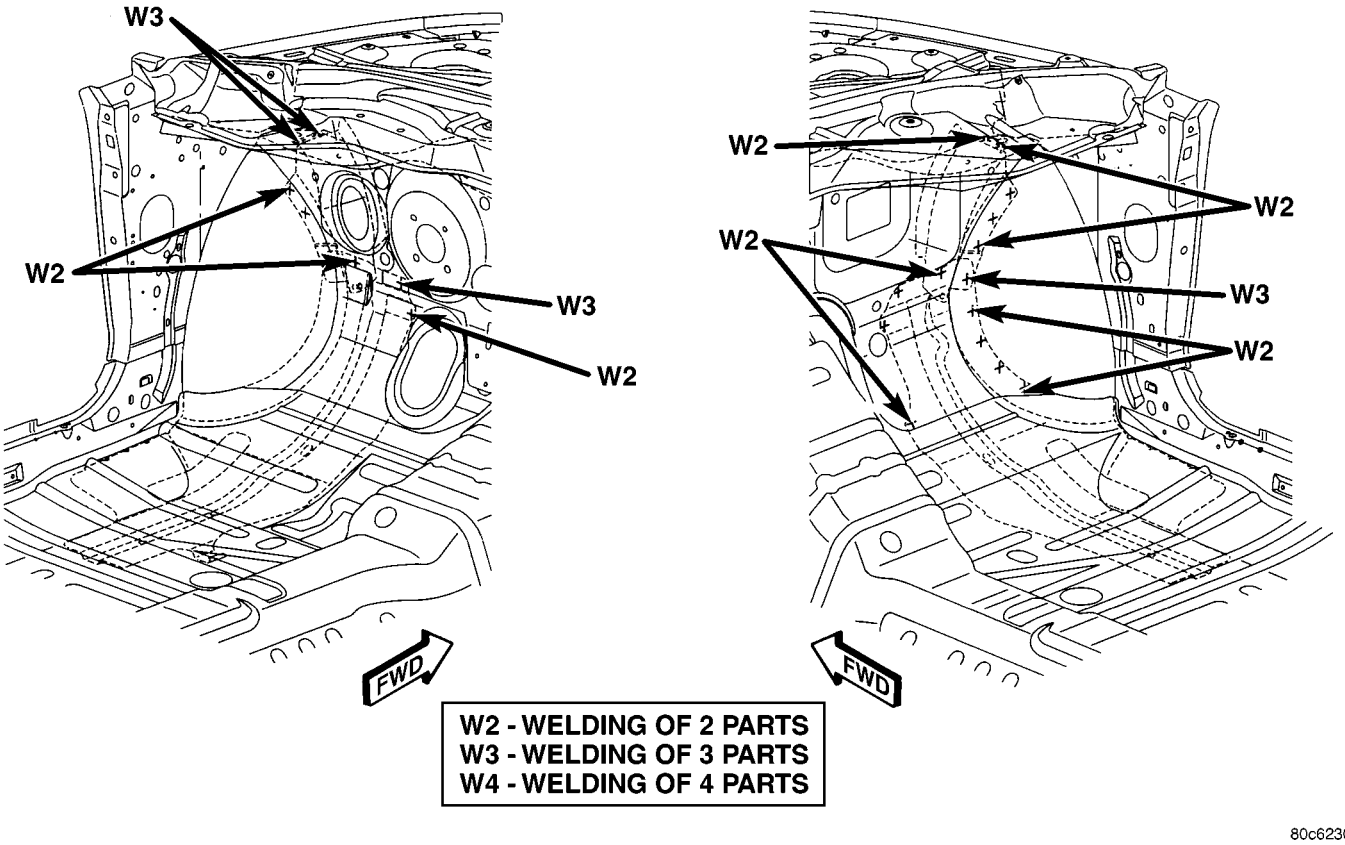

Fig. 122 SHOCK TOWER EXTENSION TO DASH PANEL

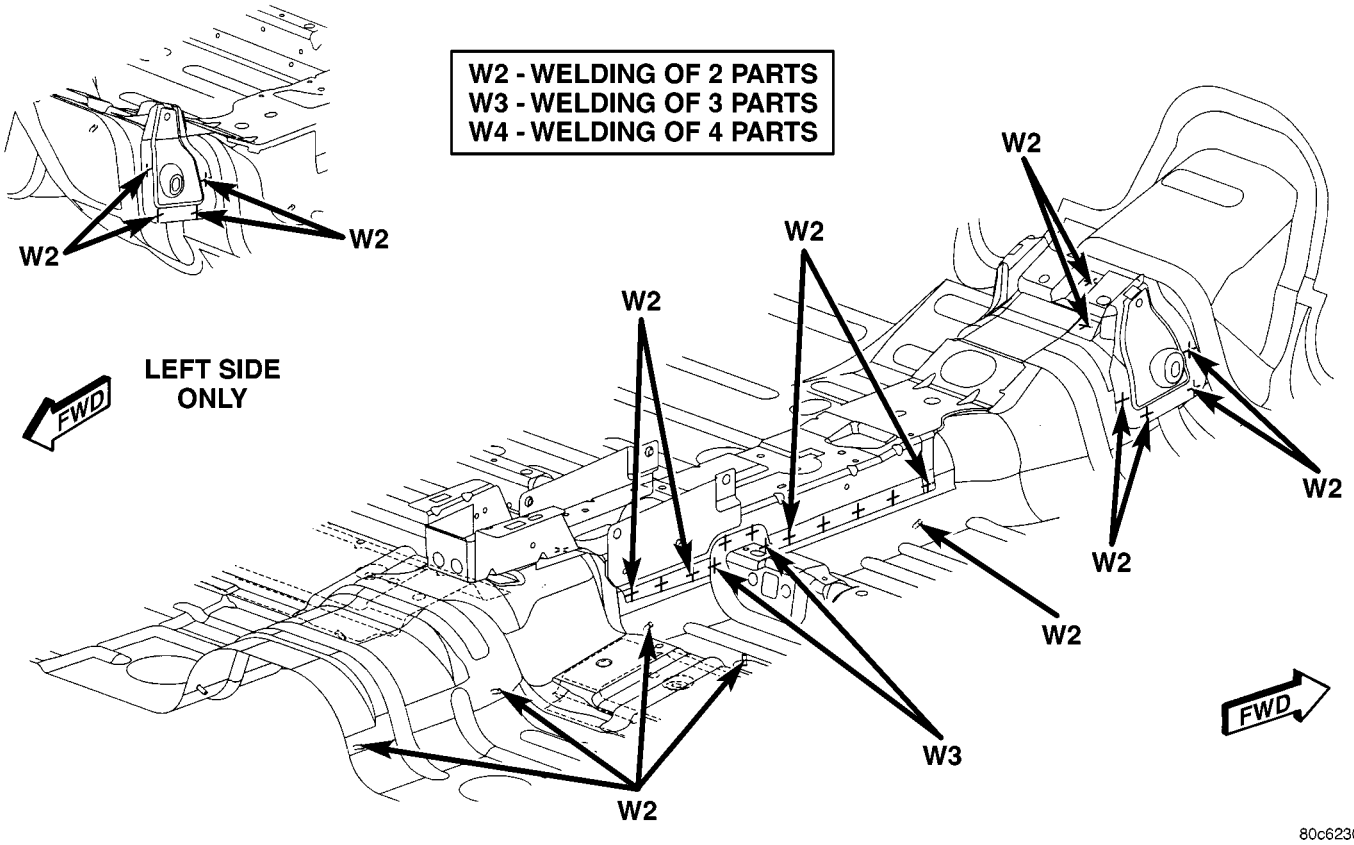

Fig. 123 FRONT CONSOLE MOUNTING BRACKET TO FRONT FLOOR PAN

WELD LOCATIONS (Continued)

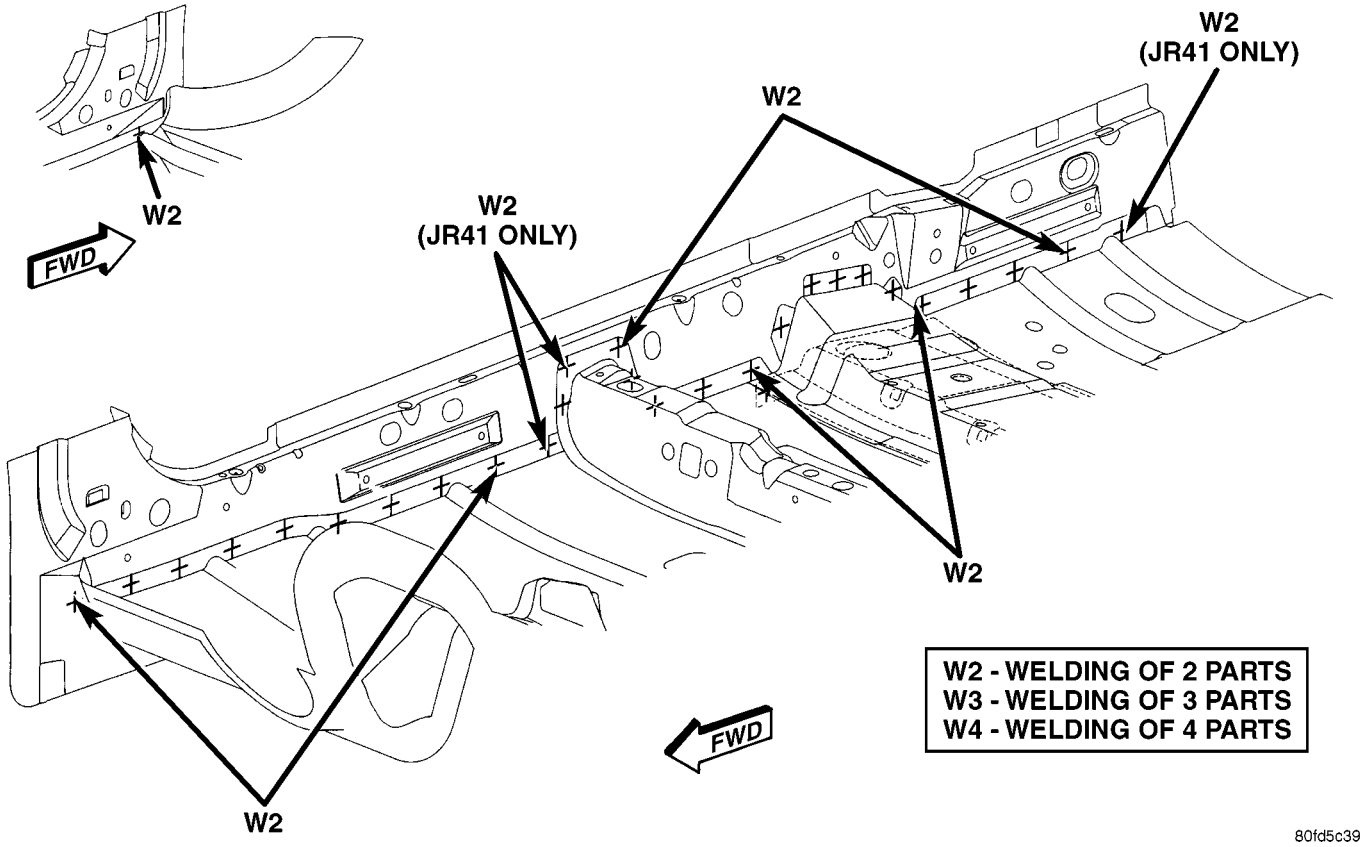

Fig. 124 SEAT TRACK CROSSMEMBER & FRONT FLOOR PAN TO INNER BODY SIDE SILL

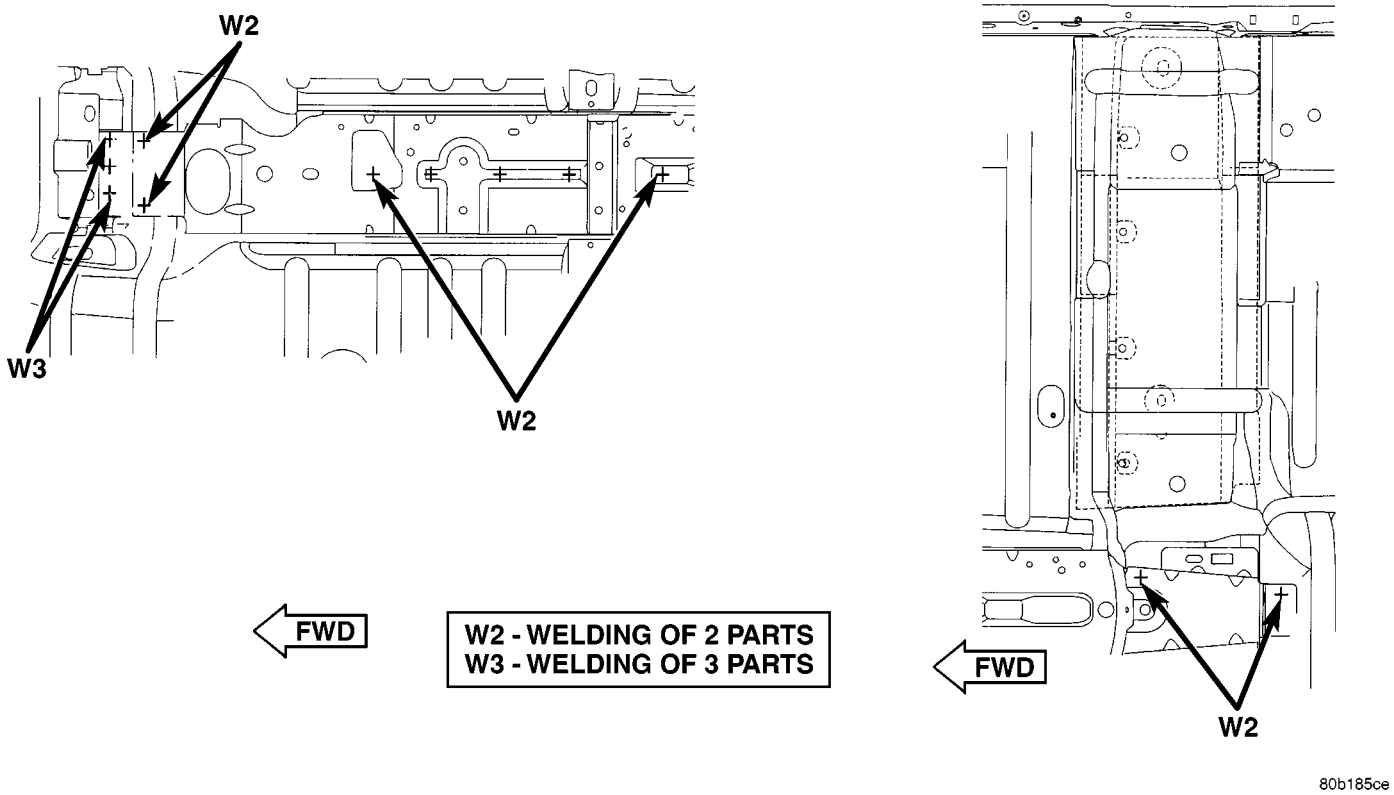

Fig. 125 FRONT SEAT TRACK CROSSMEMBER TO FRONT FLOOR PAN

WELD LOCATIONS (Continued)

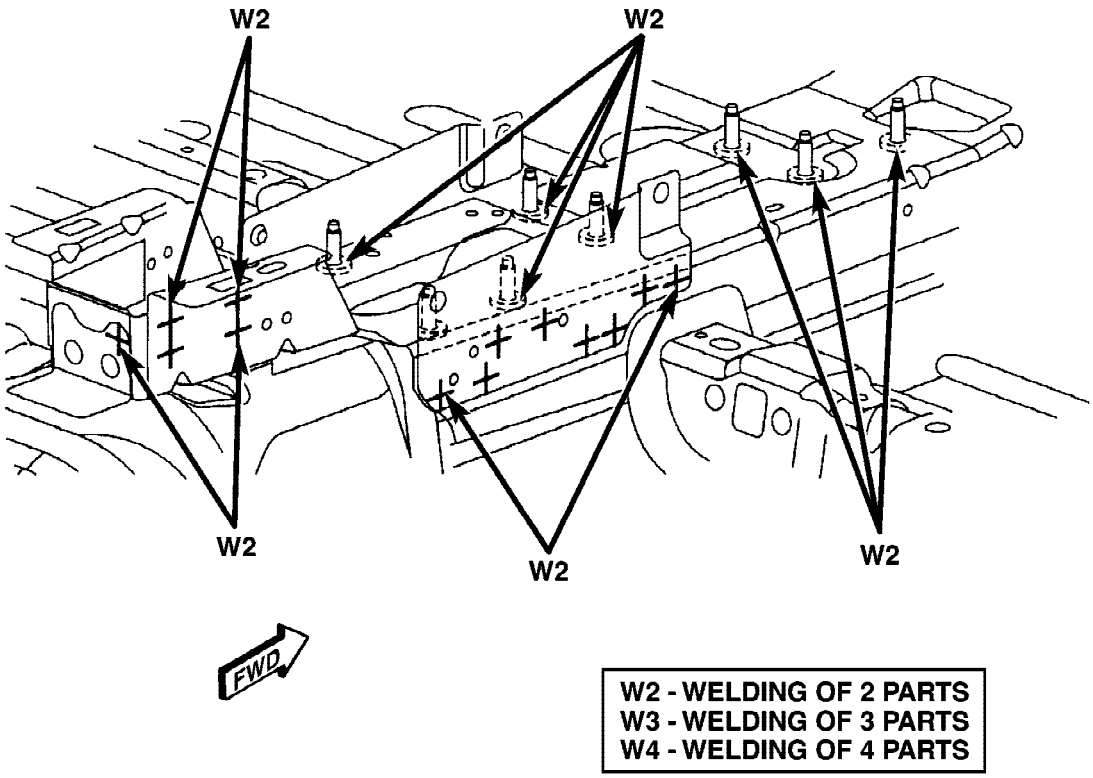

80c6230a

Fig. 126 PARK BRAKE BRACKET & SHIFTER MOUNTING STUDS TO FRONT CONSOLE MOUNTING BRACKET

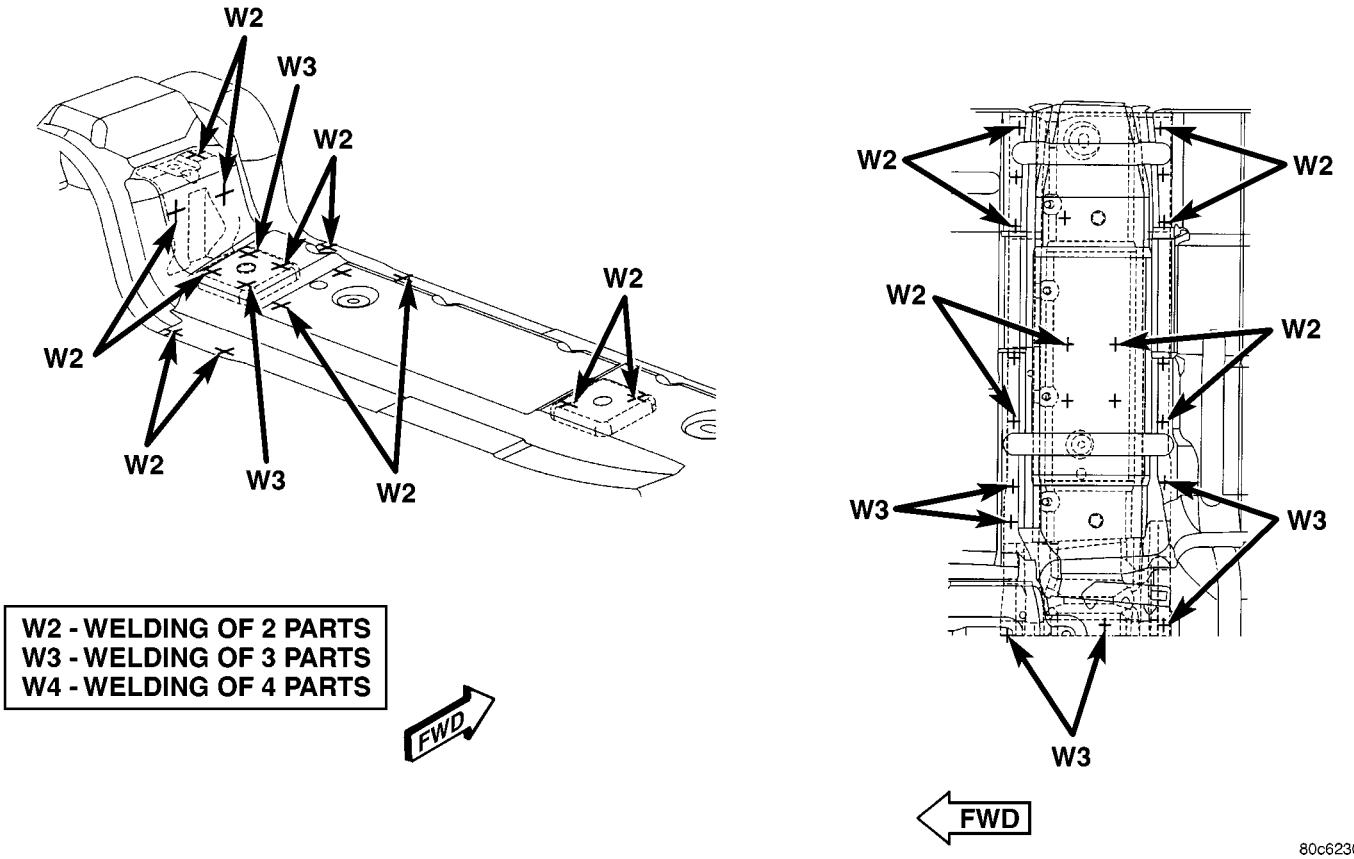

80c6230b

Fig. 127 SEAT MOUNTING CROSSMEMBER TO TUNNEL REINFORCEMENT TO FRONT CONSOLE MOUNTING BRACKET

WELD LOCATIONS (Continued)

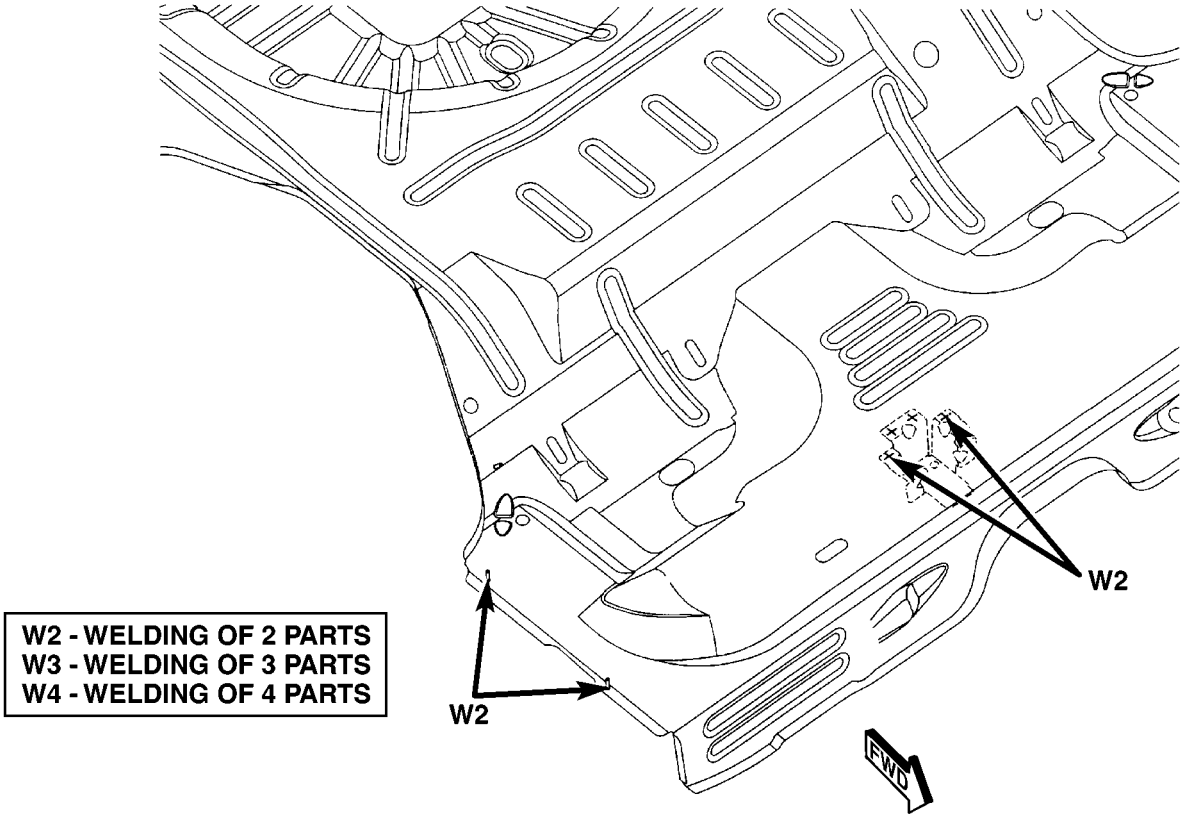

80c6230c

Fig. 128 WIRING HARNESS WELD STUDS & FUEL TANK STRAP BRACKET TO REAR FLOOR PAN

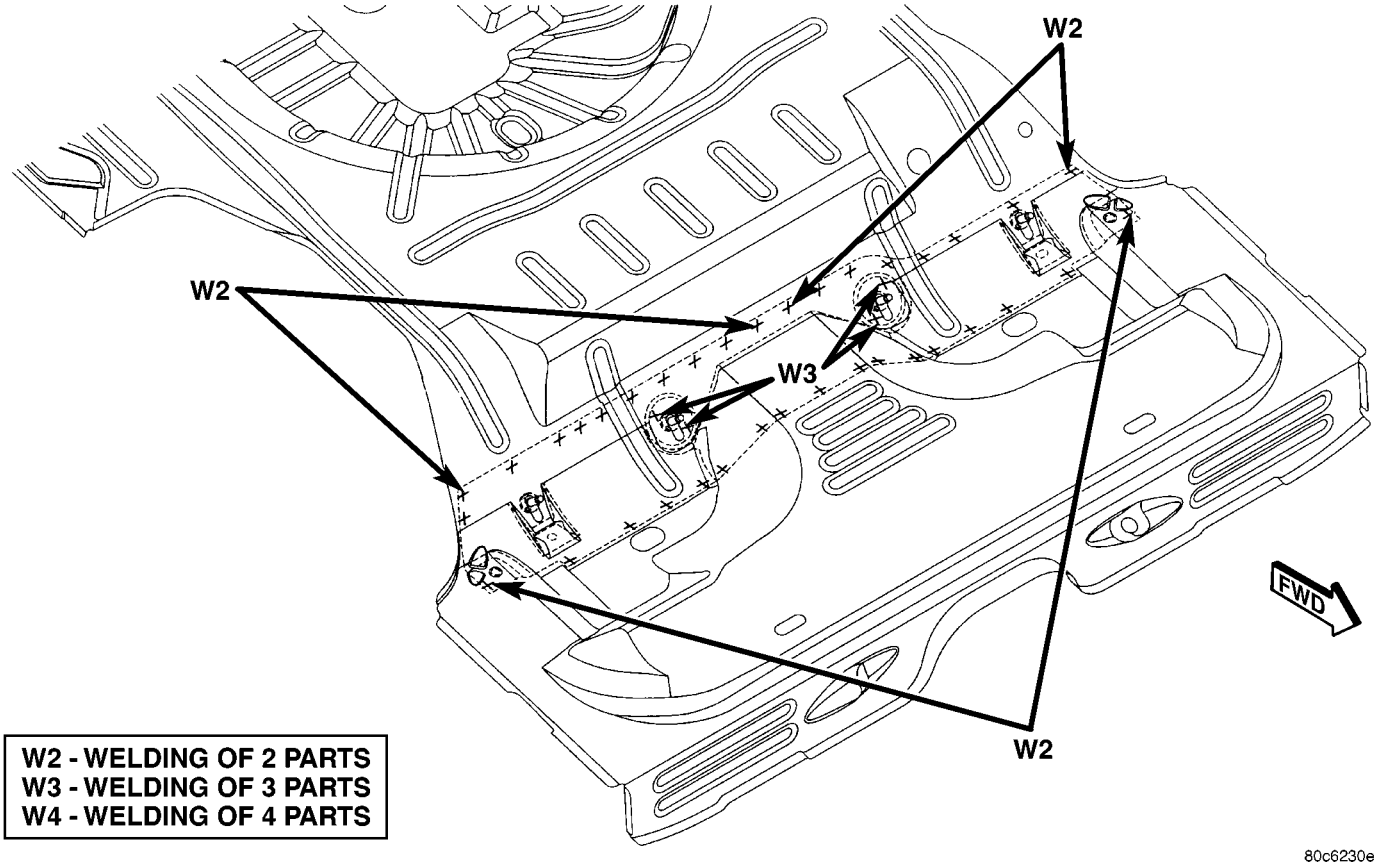

80c6230e

Fig. 129 CENTER SEAT BELT REINFORCEMENT TO SEAT BELT ANCHOR TO REAR FLOOR PAN

WELD LOCATIONS (Continued)

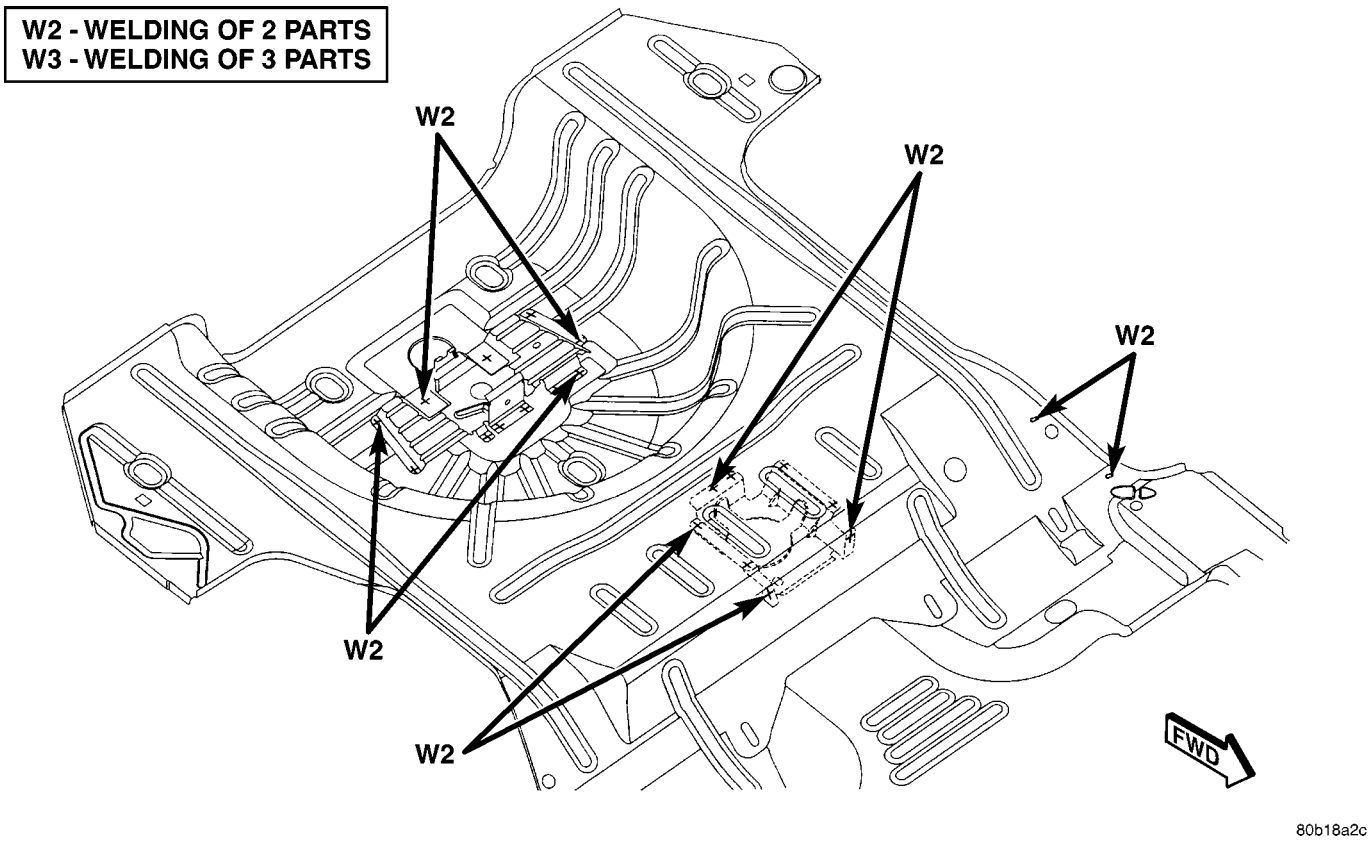

Fig. 130 SPARE WHEEL ANCHOR REINFORCEMENT FUEL TANK SUPPORT BRACKET TO REAR FLOOR PAN

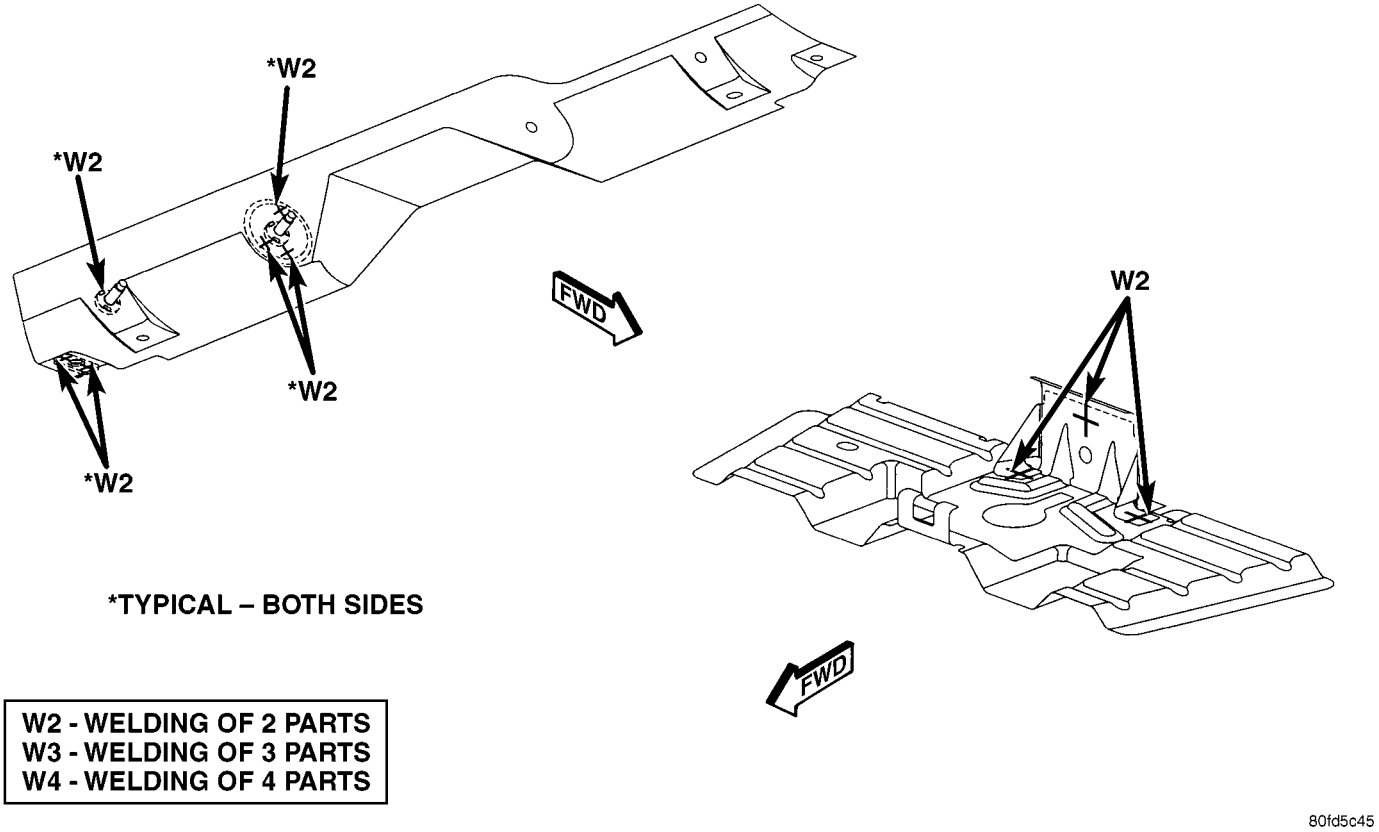

Fig. 131 WELD STUD TO SEAT BELT ANCHOR REINFORCEMENT & SPARE WHEEL BRACKET

WELD LOCATIONS (Continued)

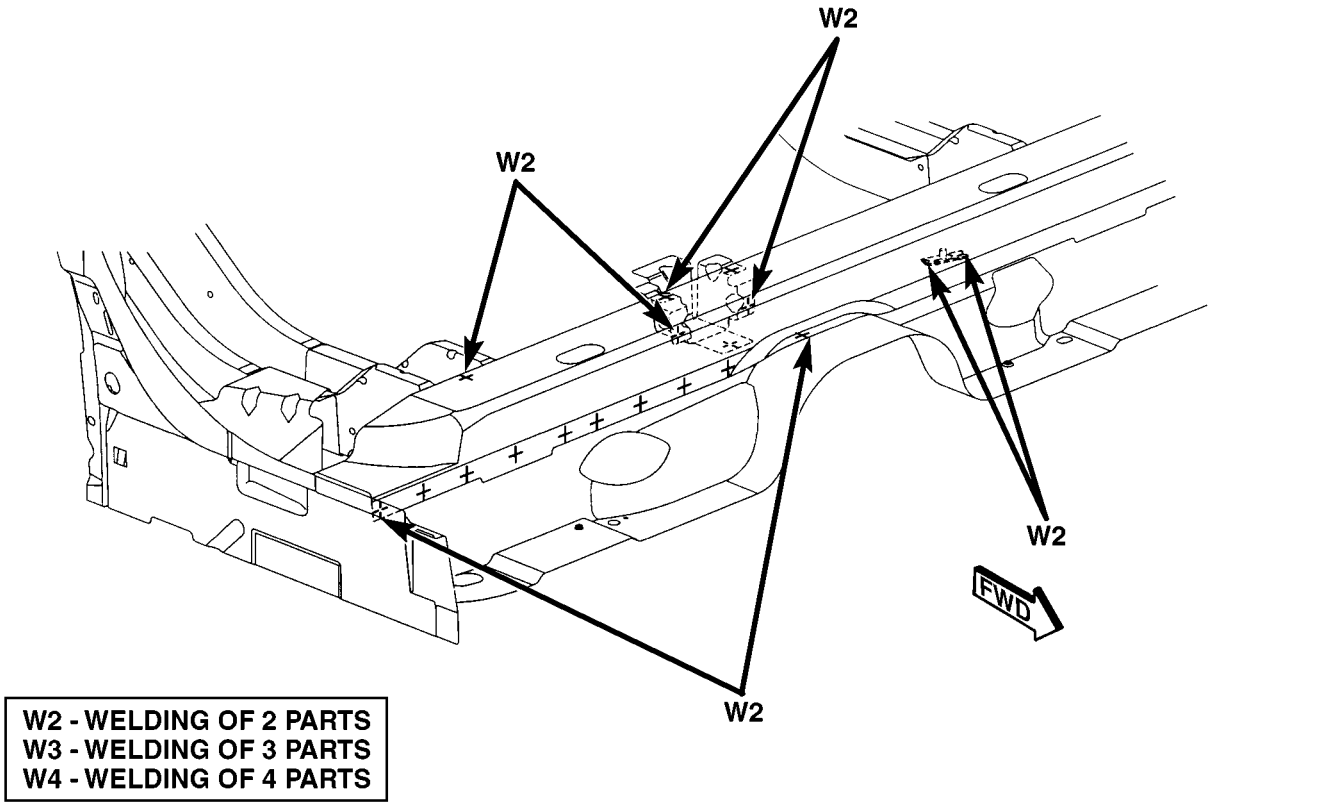

Fig. 132 REAR SEAT CROSSMEMBER REINFORCEMENT TO REAR FLOOR PAN FRONT CROSSMEMBER

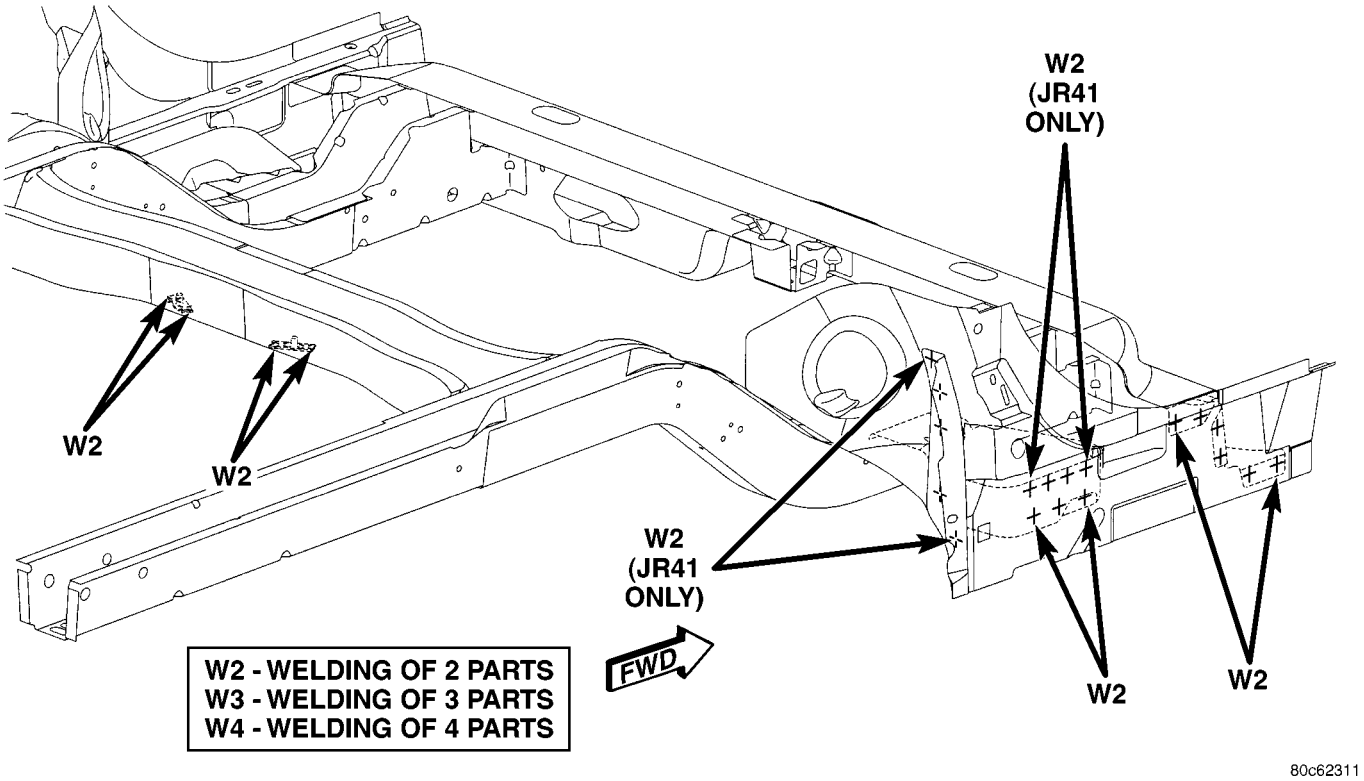

Fig. 133 REAR RAIL EXTENSION BODY SIDE APERTURE BRACKET, REAR FLOOR PAN CROSSMEMBER TO INNER BODY SIDE SILL EXTENSION

WELD LOCATIONS (Continued)

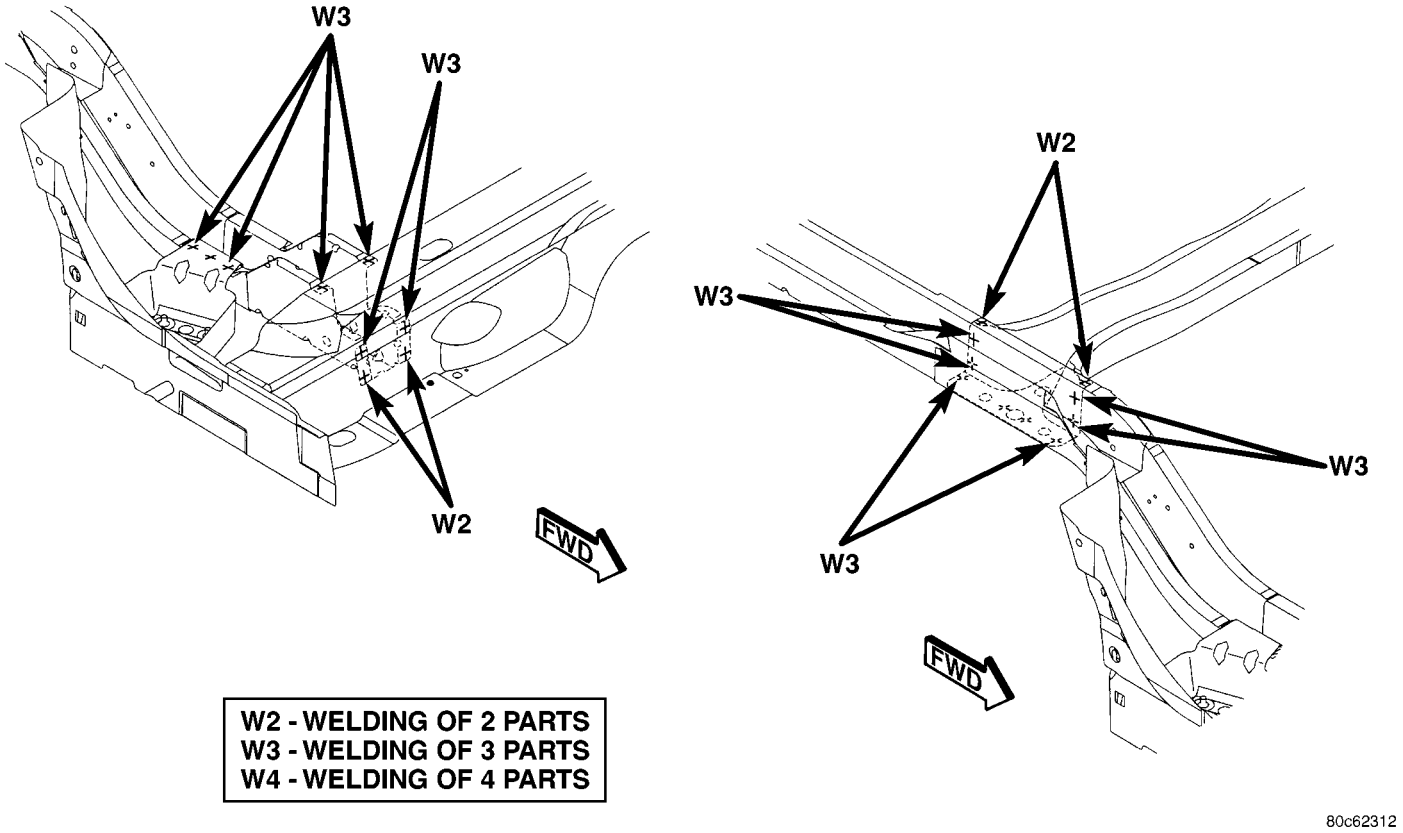

Fig. 134 CENTER FLOOR PAN CROSSMEMBER TO REAR FLOOR PAN SIDE RAIL REAR EXTENSION TO CENTER FLOOR SIDE RAIL

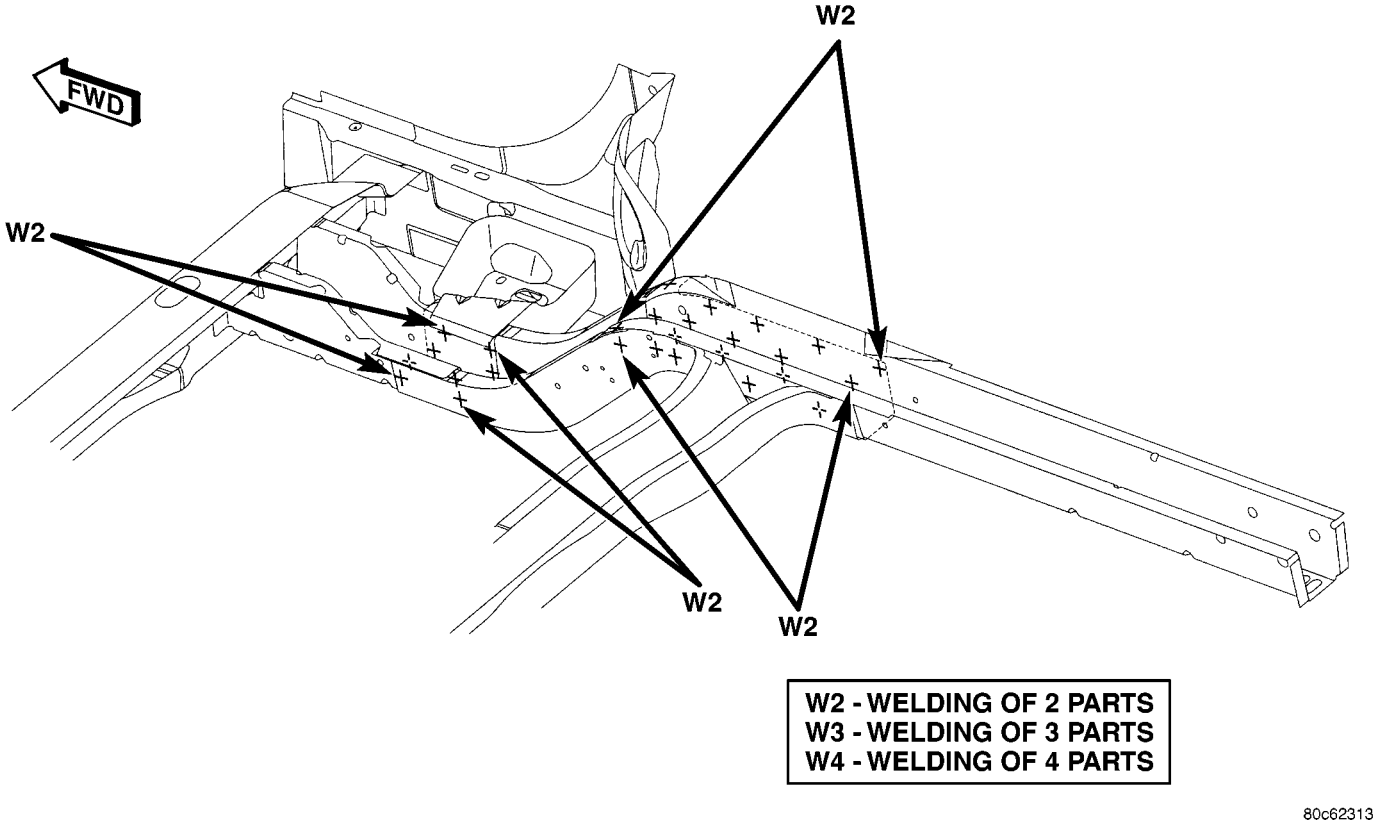

Fig. 135 CENTER FLOOR PAN SIDE RAIL TO CENTER SIDE RAIL EXTENSION TO REAR FLOOR PAN SIDE RAIL

WELD LOCATIONS (Continued)

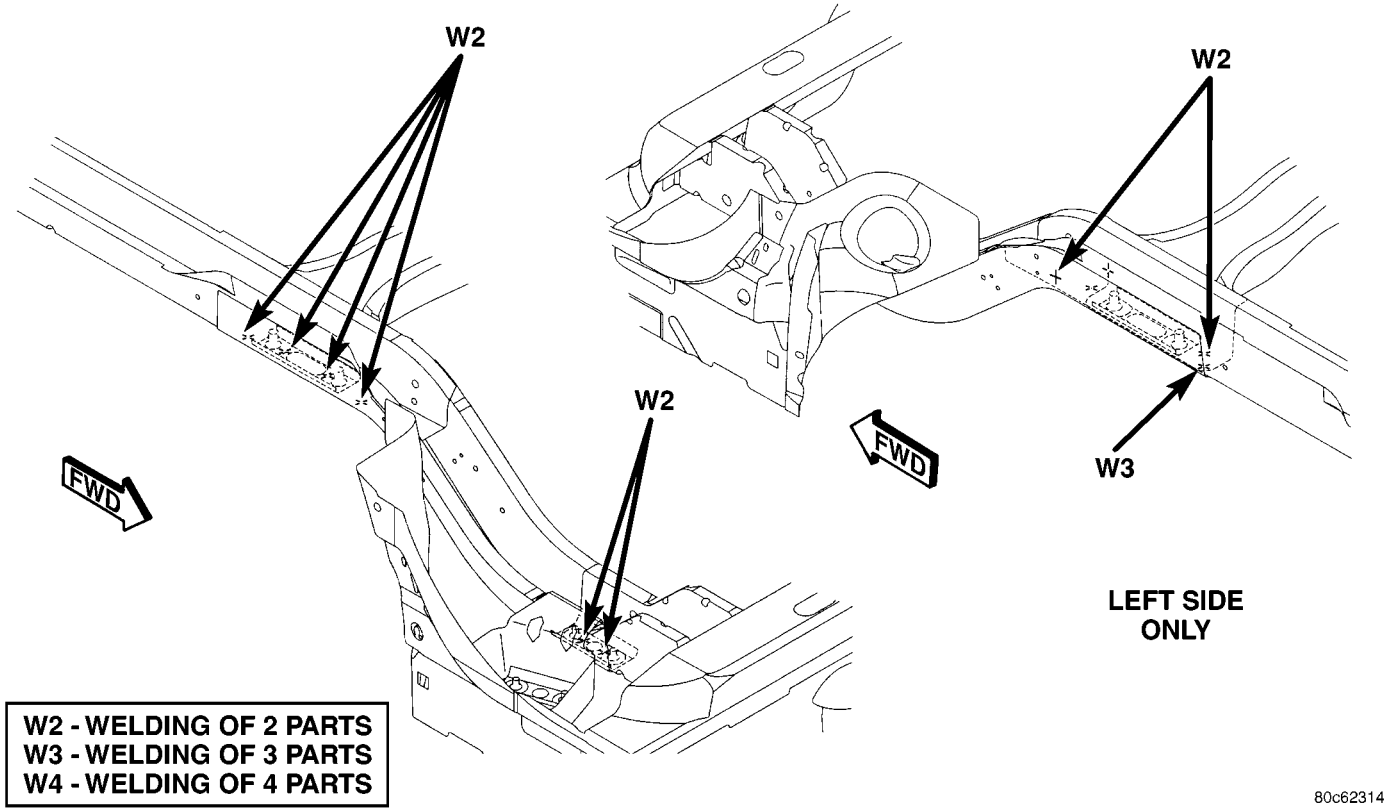

Fig. 136 CENTER FLOOR REAR SUSPENSION CROSSMEMBER TO CENTER SIDE RAIL EXTENSION TO REAR SIDE RAIL

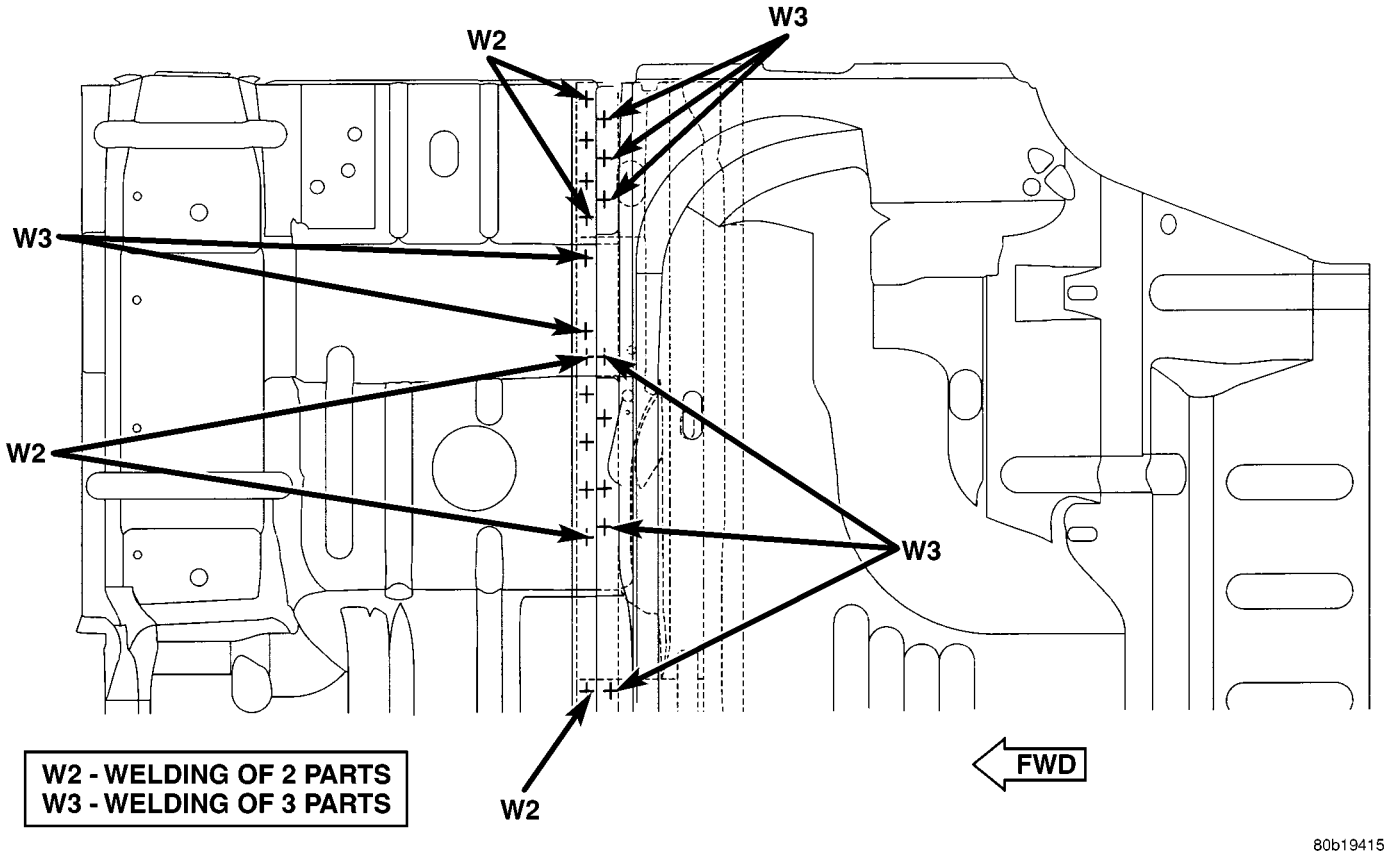

Fig. 137 REAR FLOOR PAN FRONT CROSSMEMBER TO REAR FLOOR PAN TO FRONT FLOOR PAN

WELD LOCATIONS (Continued)

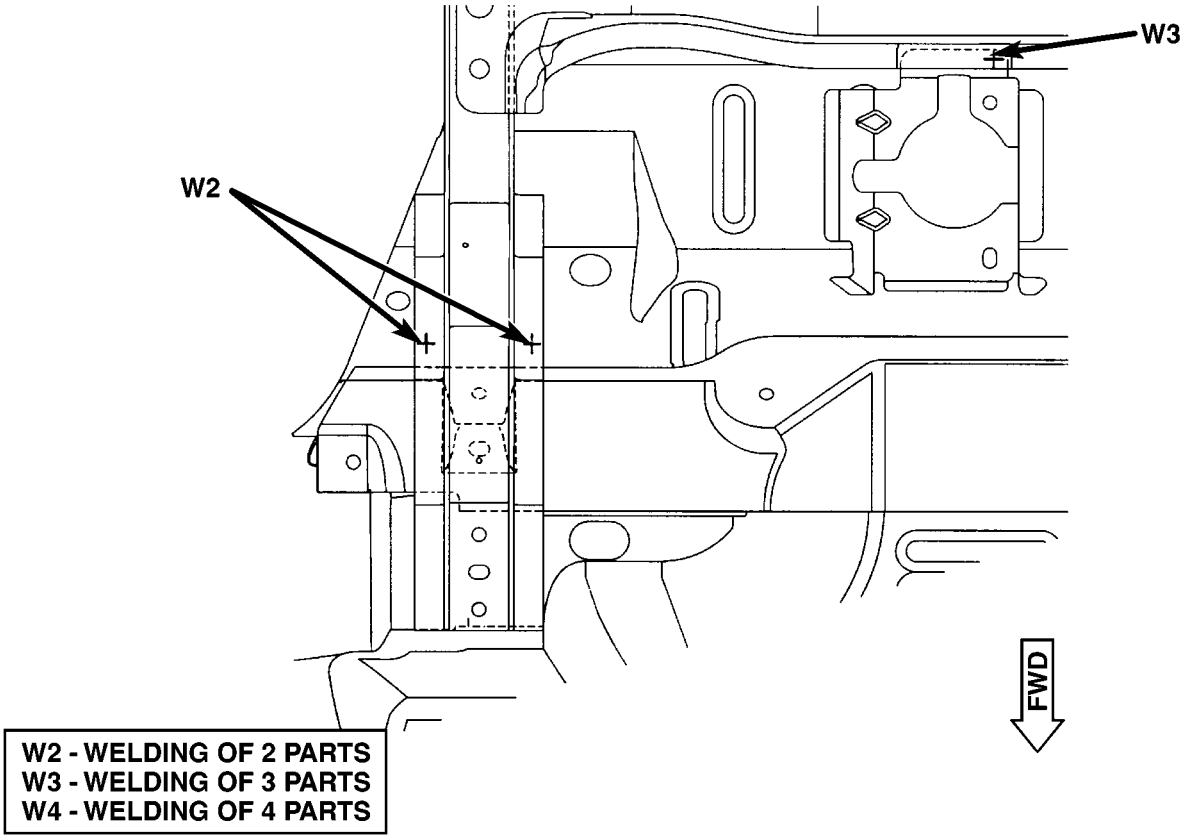

80c62317

Fig. 138 FUEL TANK SUPPORT TO REAR SUSPENSION CROSSMEMBER & SIDE RAIL EXTENSION TO REAR FLOOR PAN

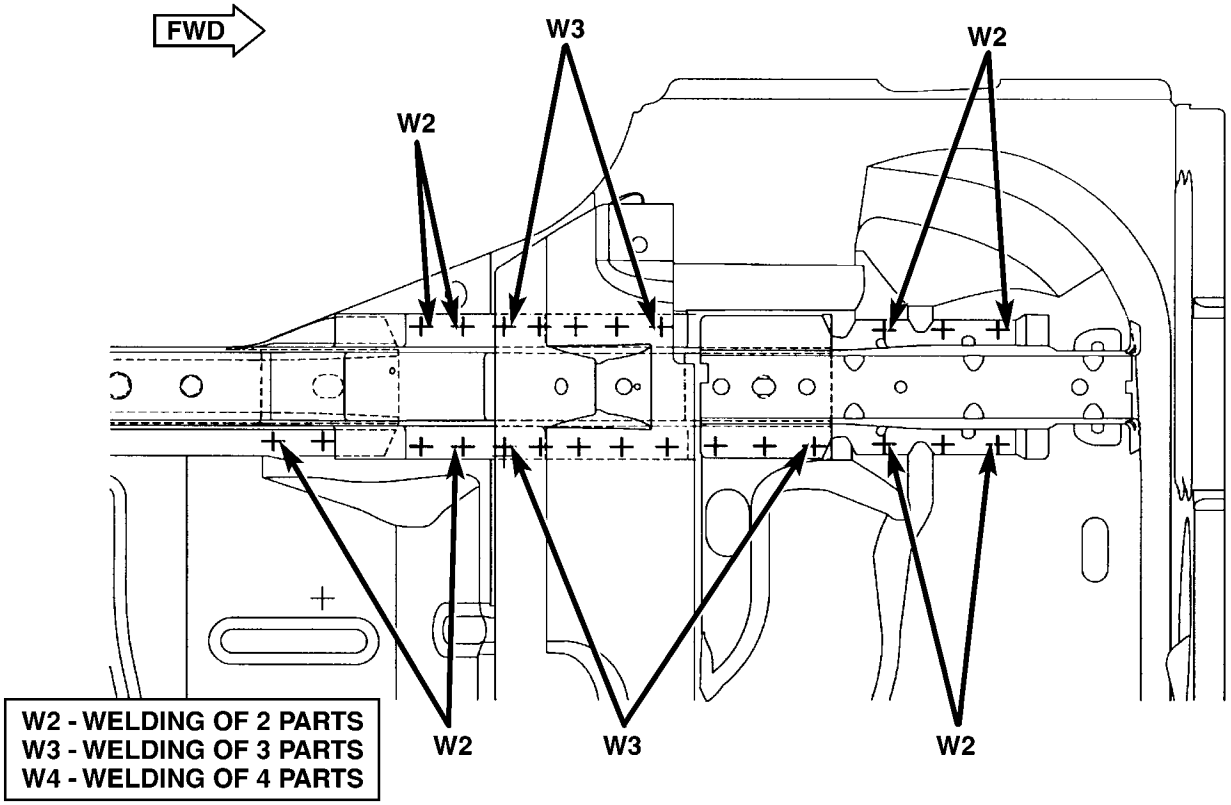

80c62318

Fig. 139 REAR SIDE RAIL EXTENSION TO CENTER FLOOR PAN SIDE RAIL & REAR SUSPENSION CROSSMEMBER TO REAR FLOOR PAN

WELD LOCATIONS (Continued)

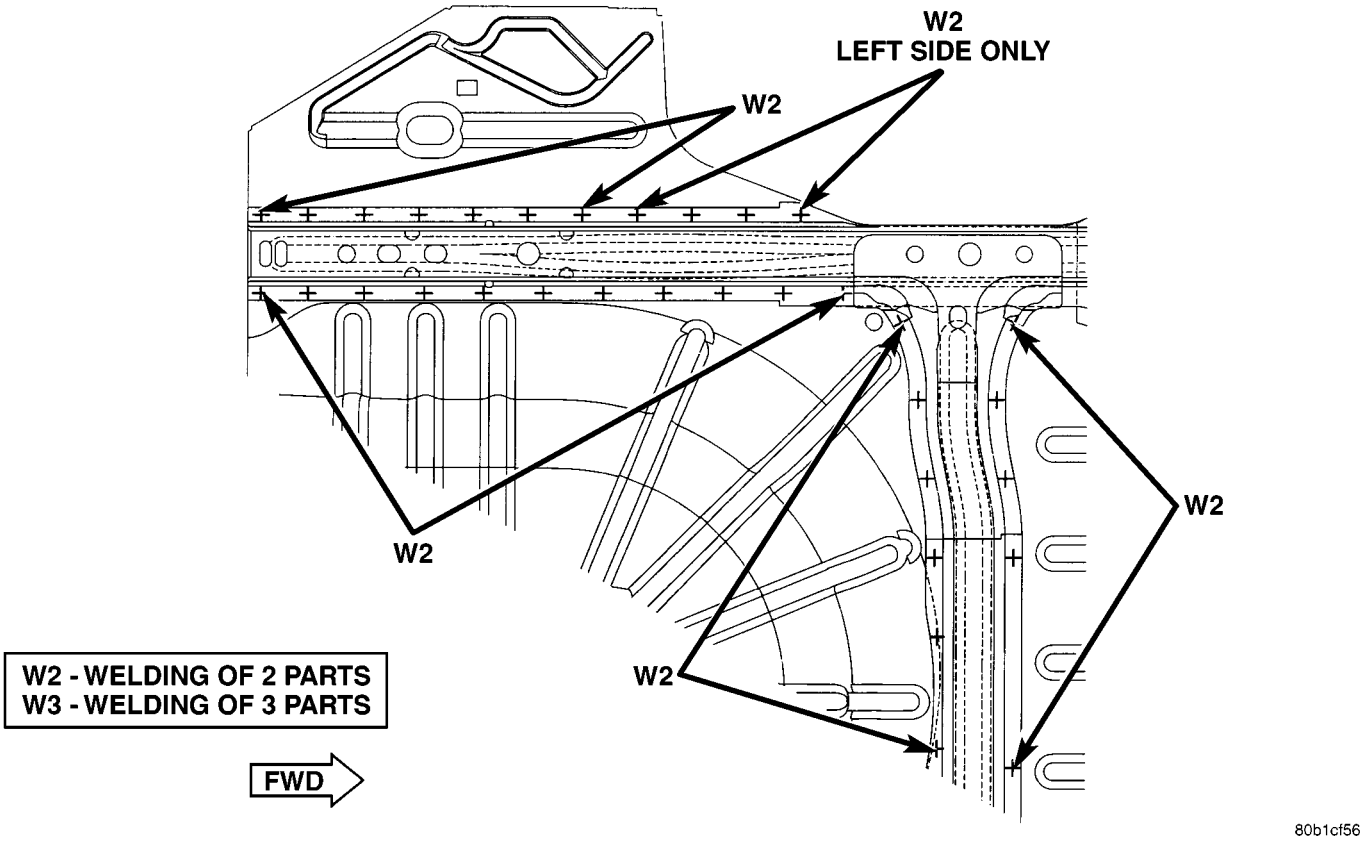

Fig. 140 REAR SIDE RAIL & REAR SUSPENSION CROSSMEMBER TO REAR FLOOR PAN

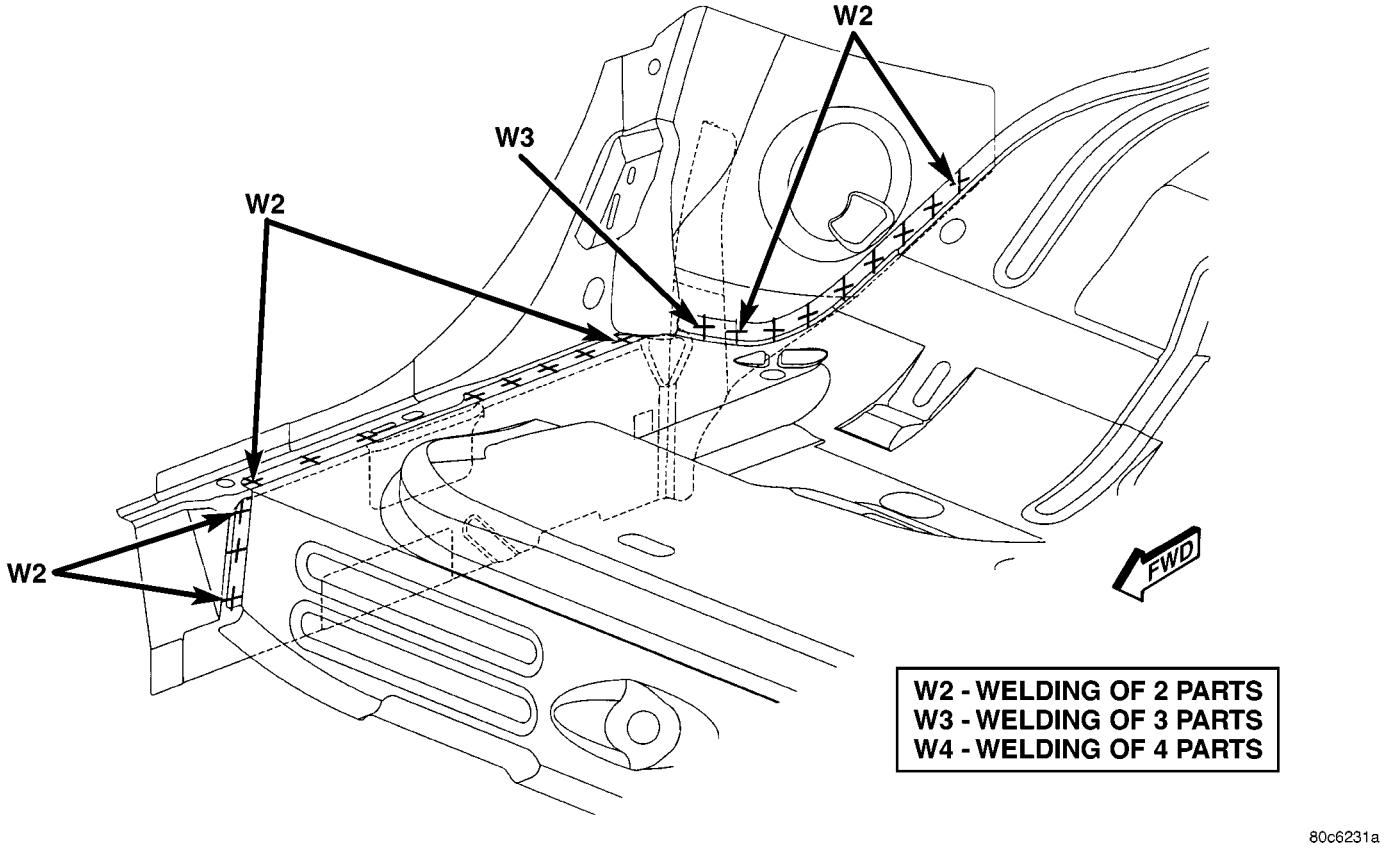

Fig. 141 INNER SILL EXTENSION TO BODY SIDE APERTURE BRACKET TO REAR FLOOR PAN

WELD LOCATIONS (Continued)

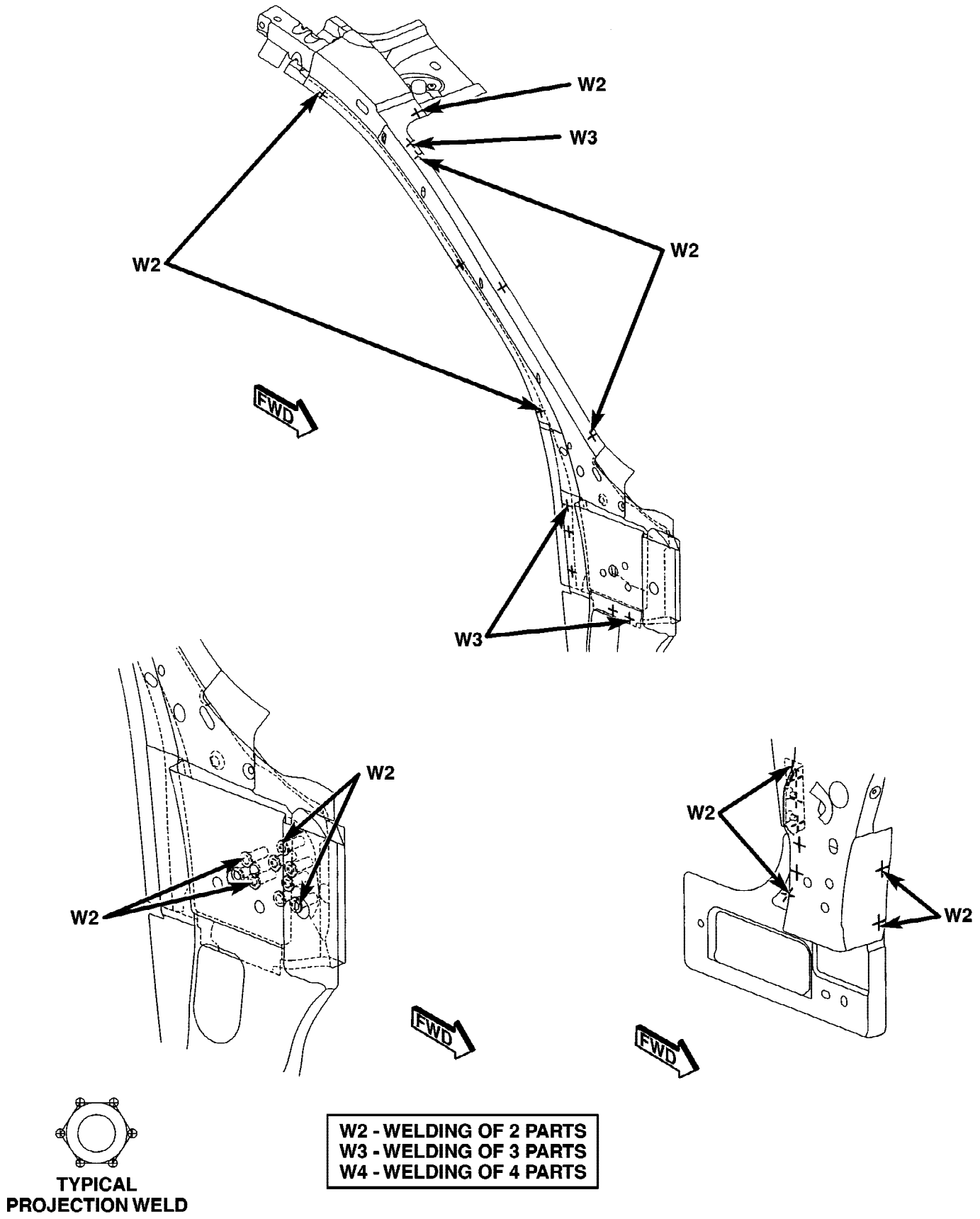

Fig. 142 INNER WINDSHIELD FRAME TO OUTER WINDSHIELD FRAME/HINGE PILLAR REINFORCEMENT TO SILL BEAM

WELD LOCATIONS (Continued)

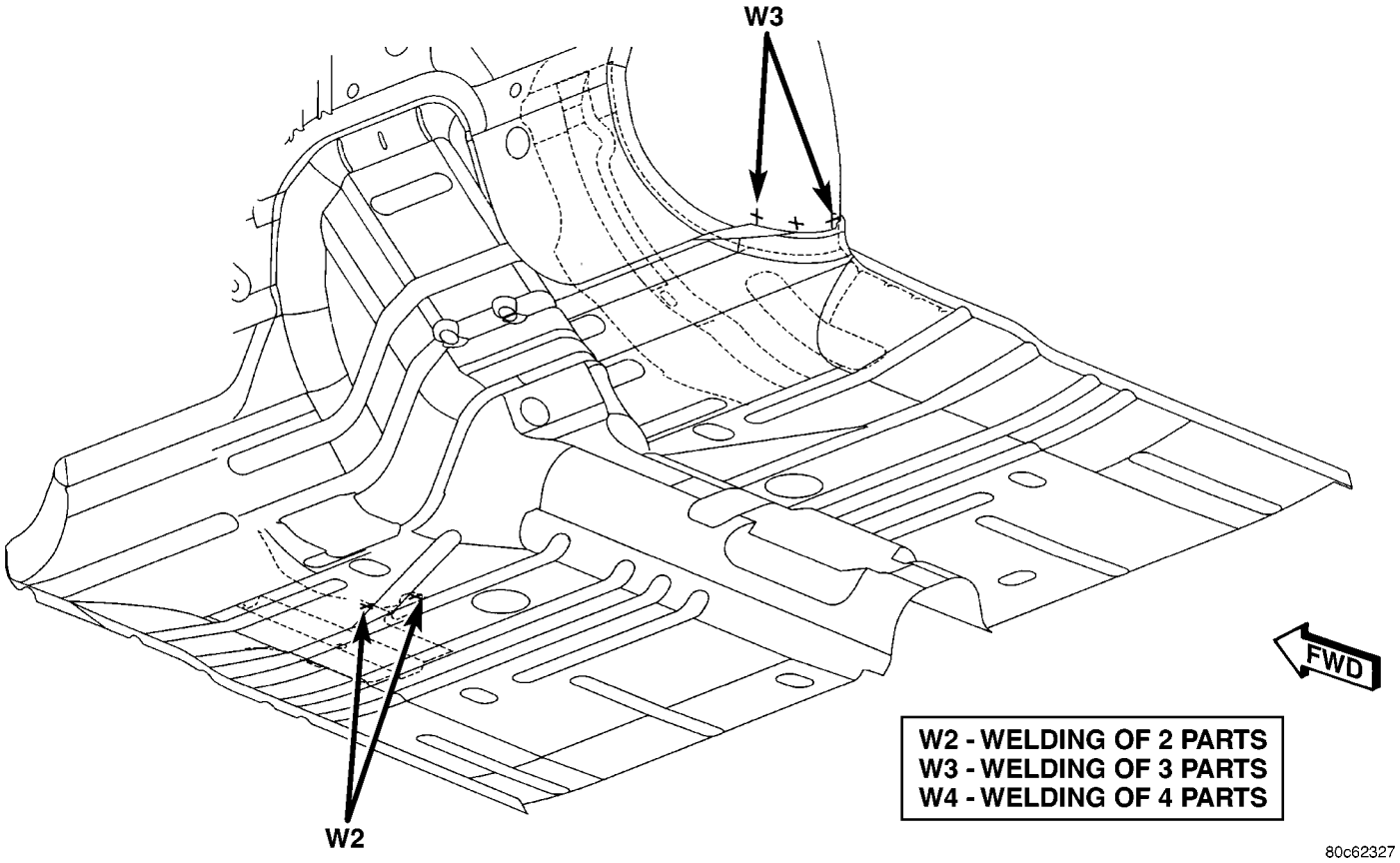

Fig. 143 FRONT RAIL REAR CAP TO DASH PANEL TO FLOOR PAN

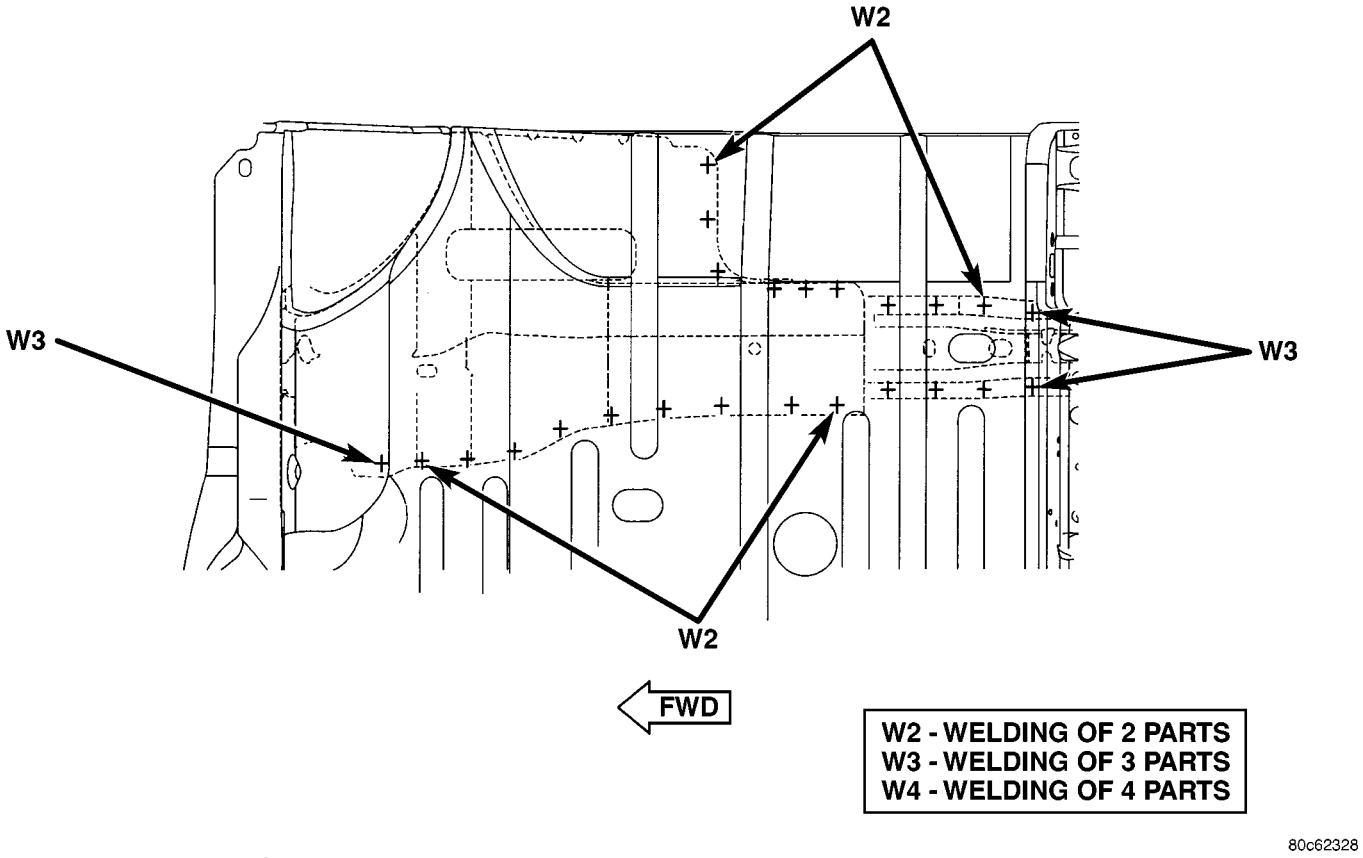

Fig. 144 FRONT SIDE RAIL & REAR CAP TO FRONT FLOOR PAN

WELD LOCATIONS (Continued)

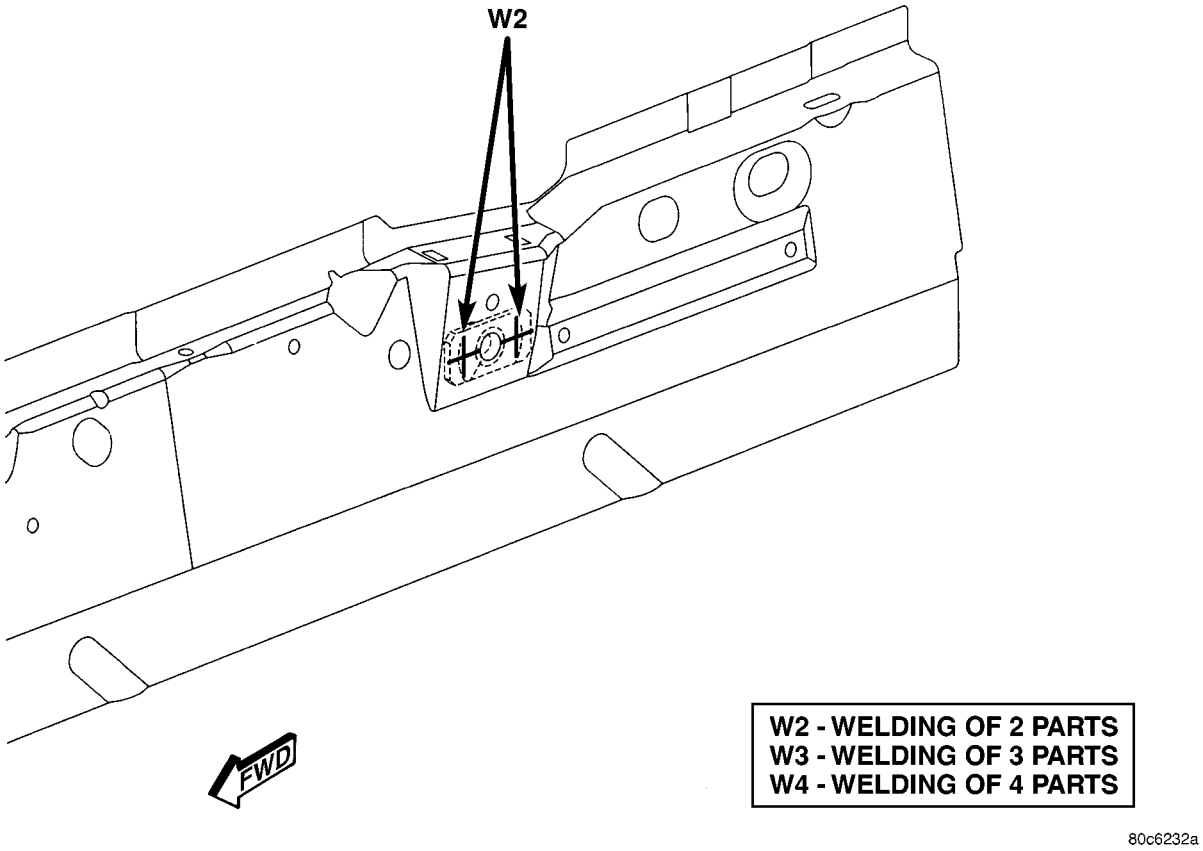

Fig. 145 FRONT SEAT BELT ANCHORAGE TO INNER BODY SILL

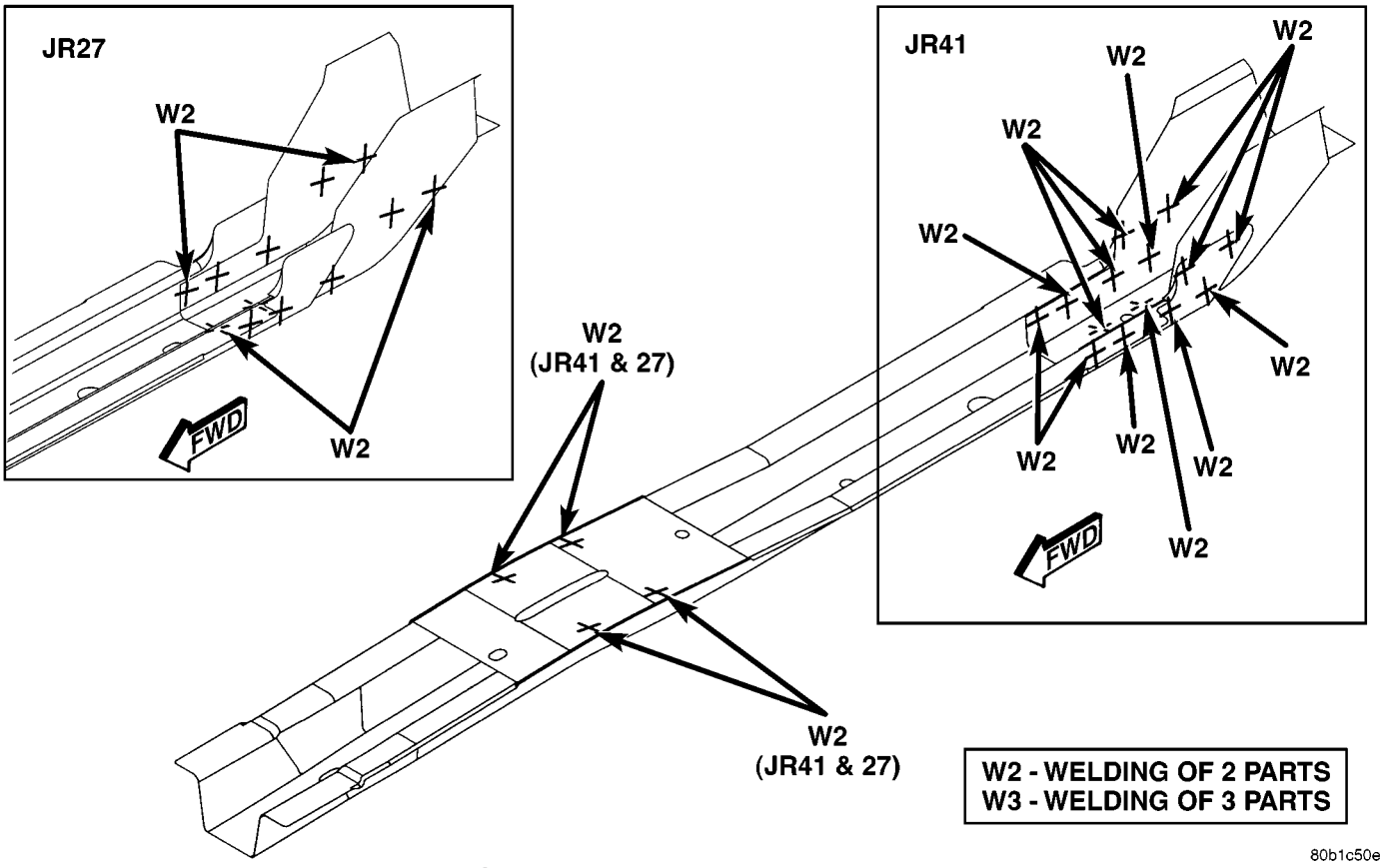

Fig. 146 FRONT FLOOR PAN RAIL

WELD LOCATIONS (Continued)

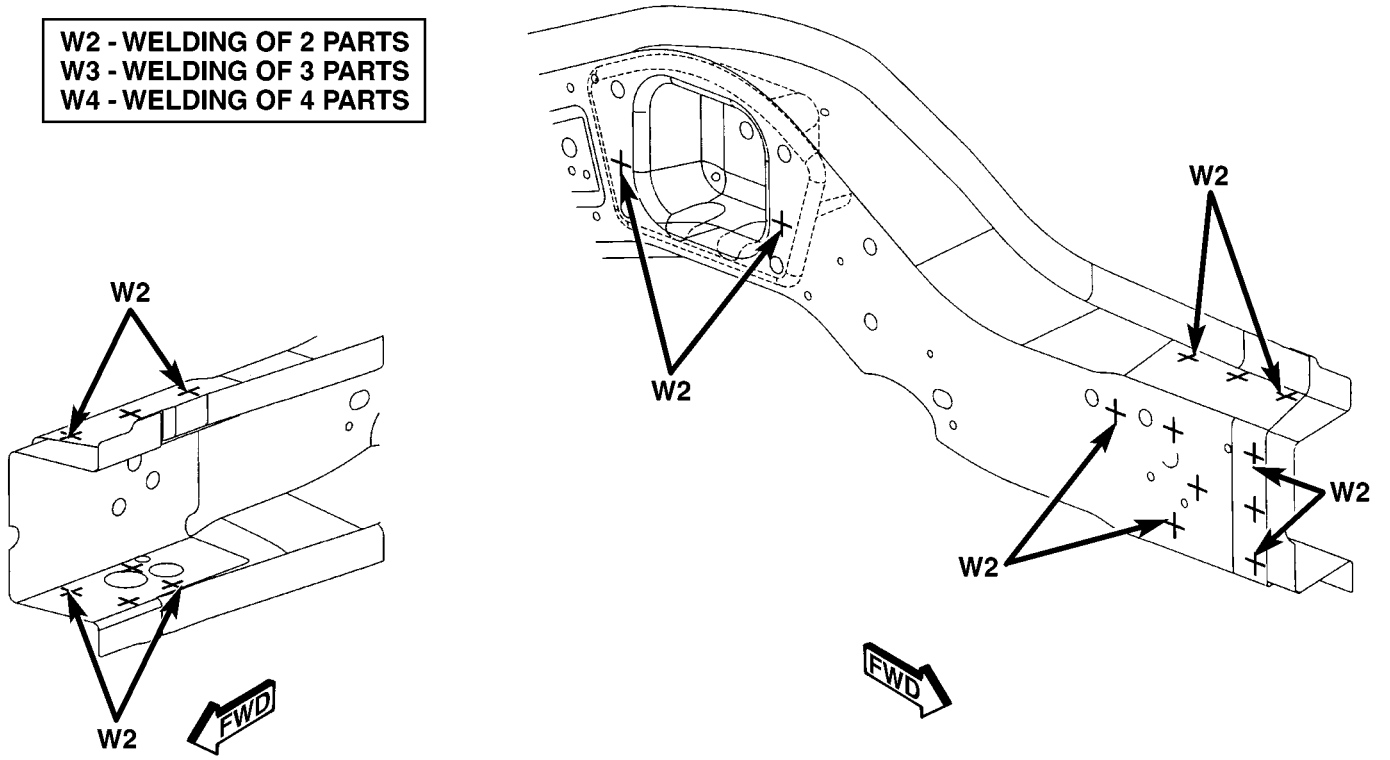

Fig. 147 ENGINE MOUNT TAPPING PLATE & BUMPER EXTENSION TO FRONT SIDE RAIL

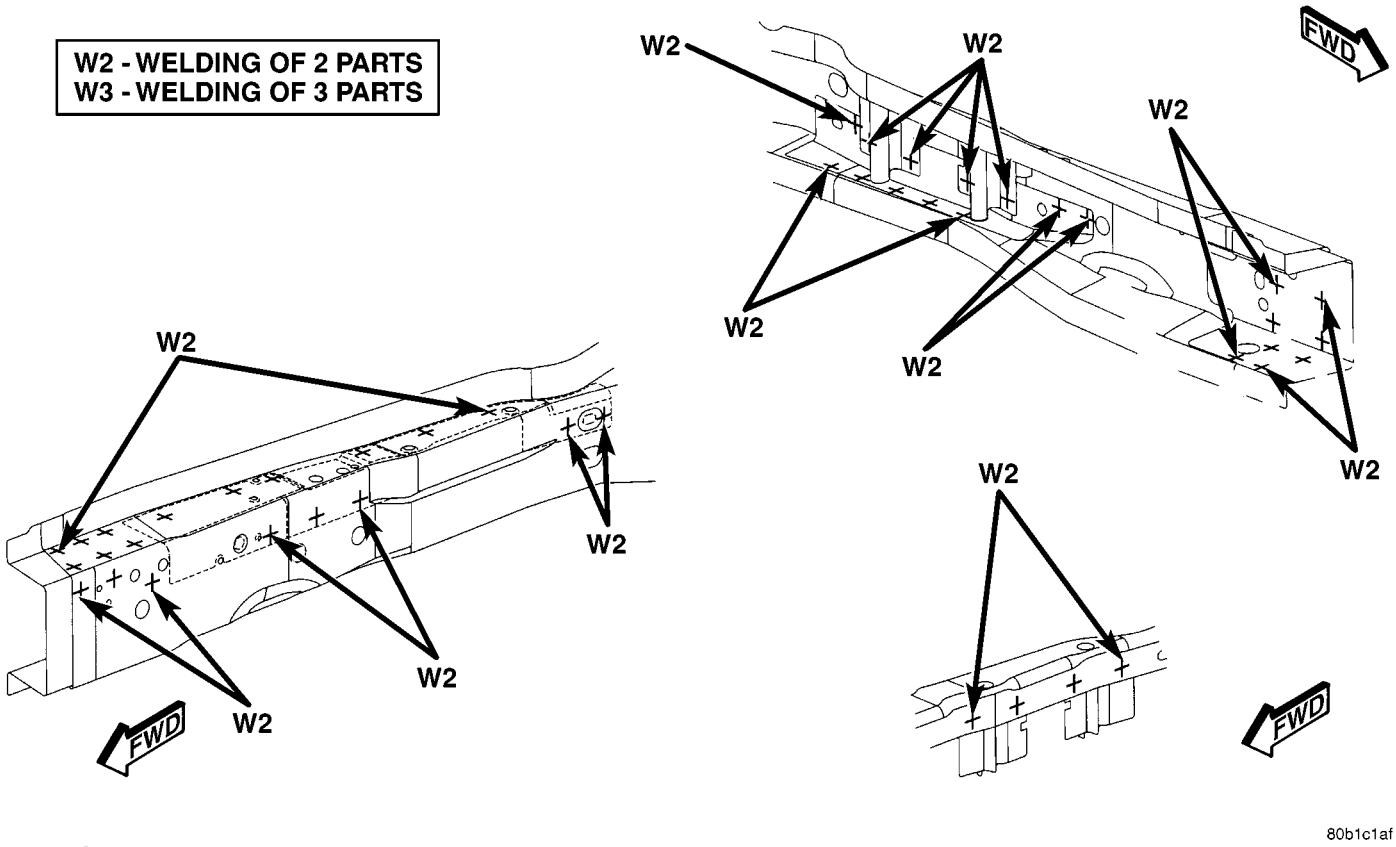

Fig. 148 BUMPER EXTENSION, FRONT RAIL REINFORCEMENT & SPACERS TO FRONT SIDE RAIL

WELD LOCATIONS (Continued)

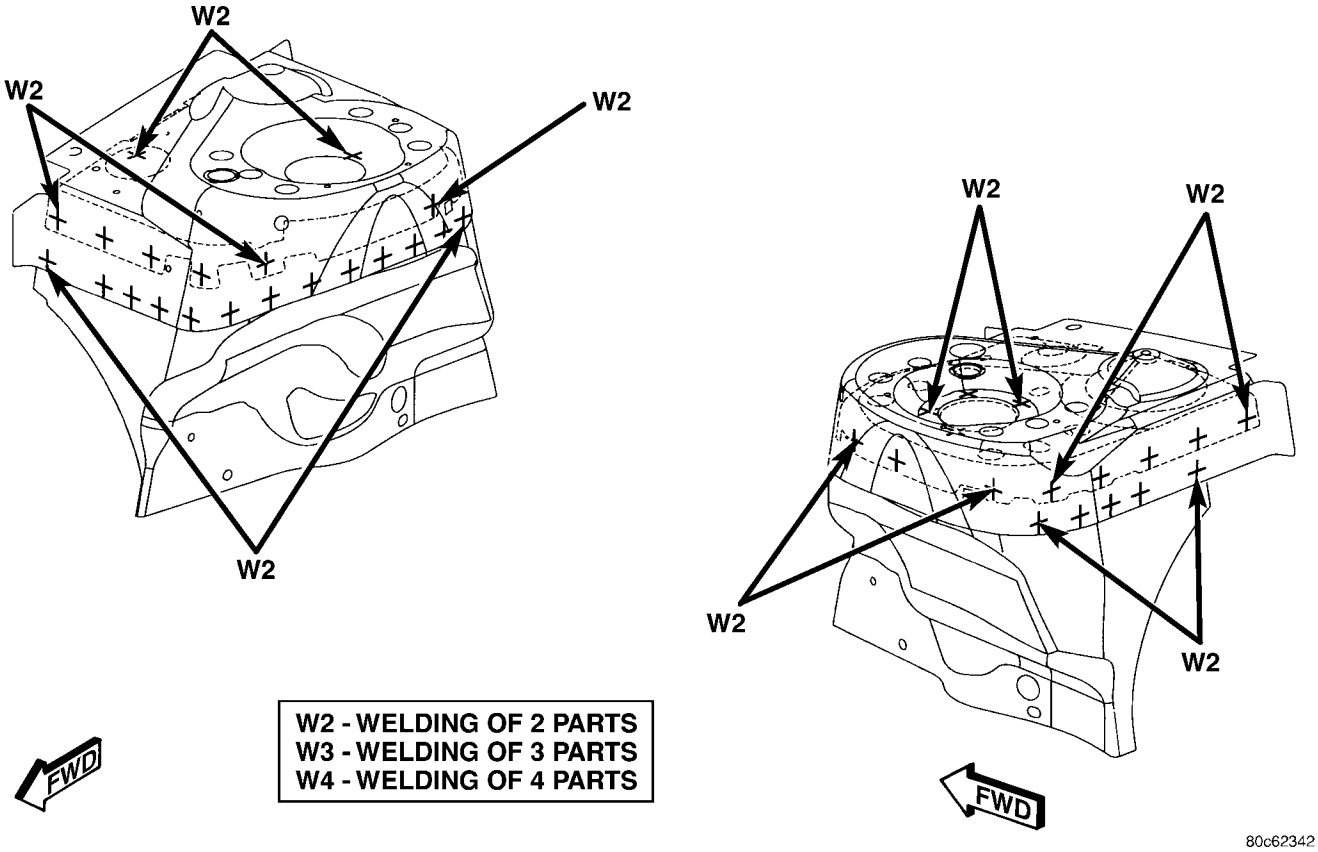

Fig. 149 RIGHT UPPER FRONT SUSPENSION MOUNT, UPPER FRONT SUSPENSION MOUNT

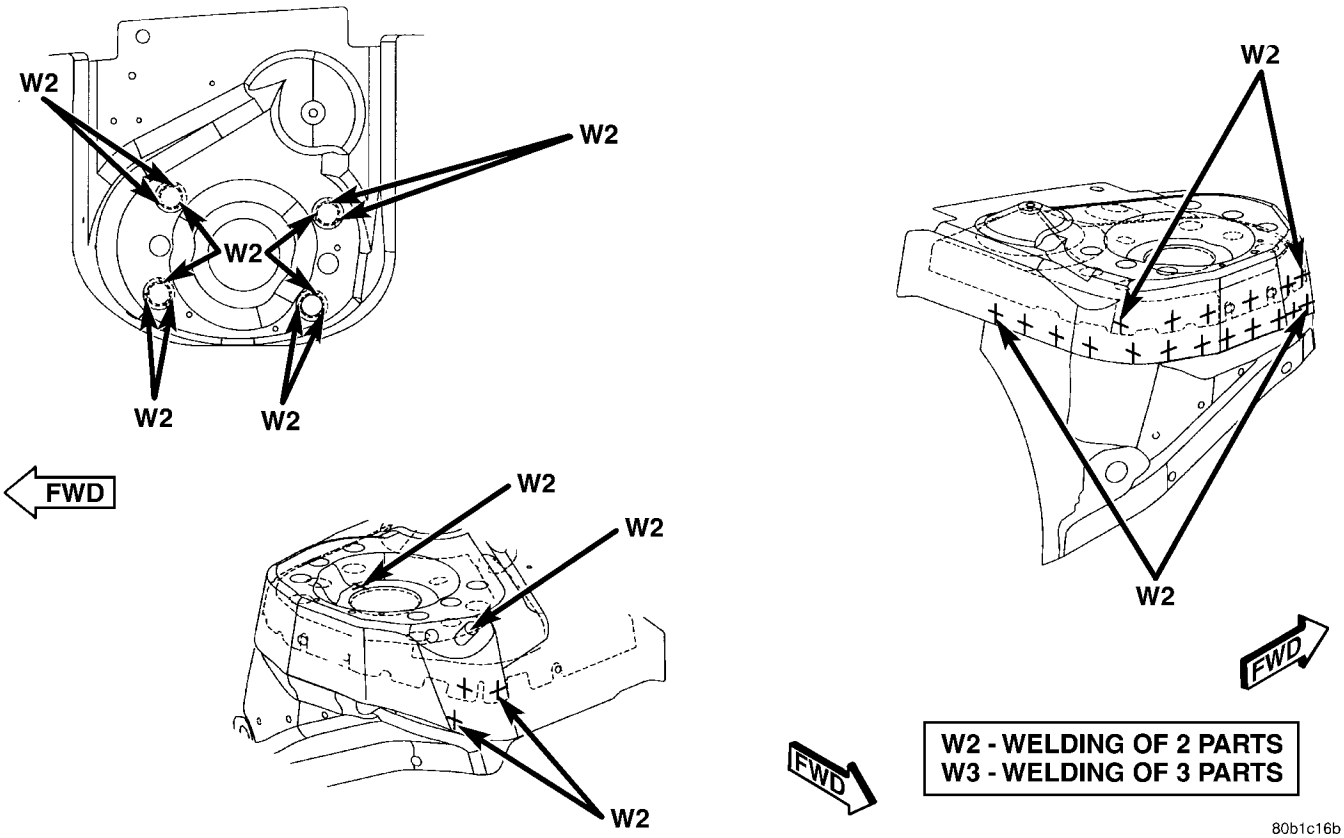

Fig. 150 UPPER FRONT SUSPENSION REINFORCEMENT & UPPER FRONT SUSPENSION MOUNT TO UPPER FRONT SUSPENSION MOUNT CAP

WELD LOCATIONS (Continued)

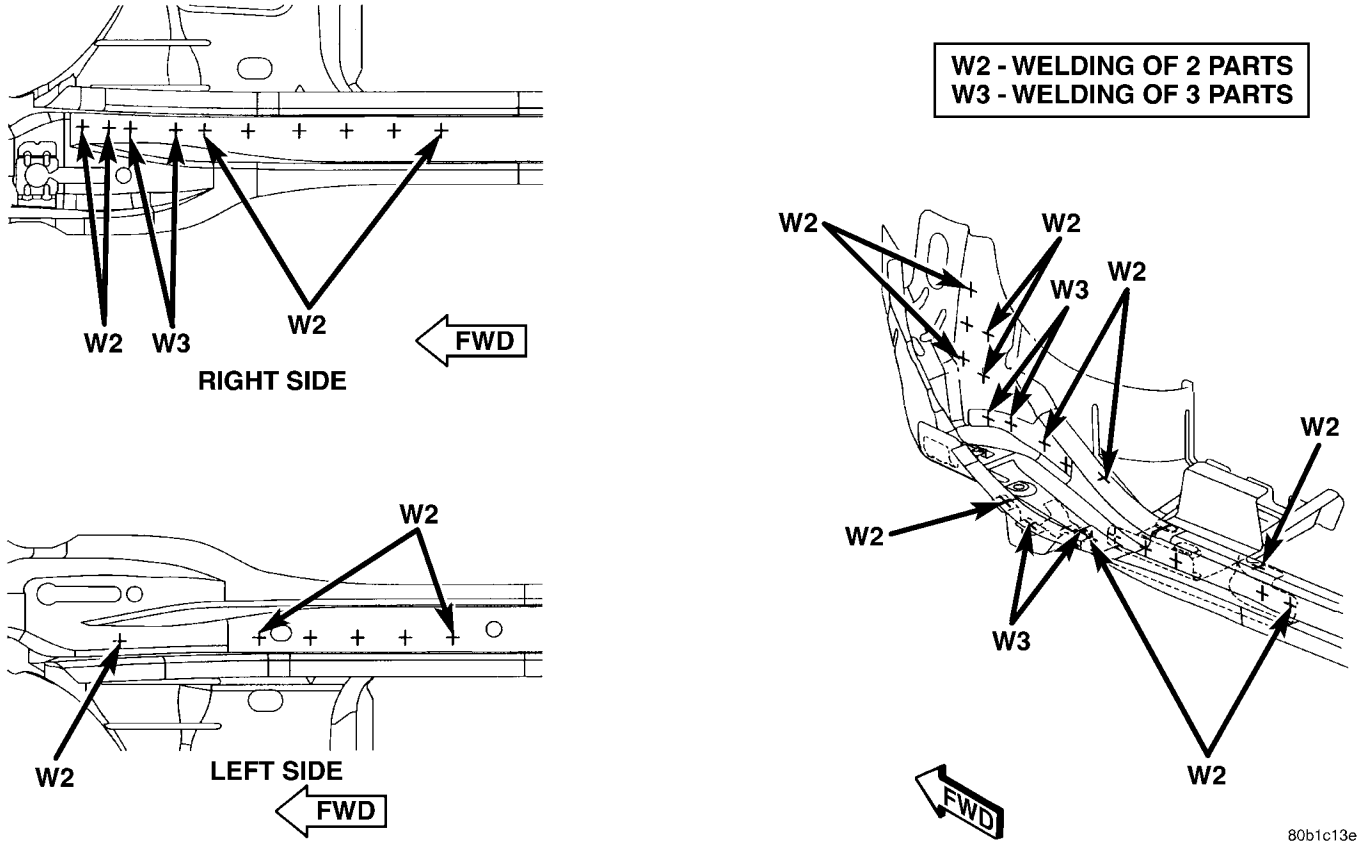

Fig. 151 SWAY BAR BRACKET TO SIDE RAIL PLATE & FRONT SIDE RAIL REINFORCEMENT TO FRONT SIDE RAIL REAR

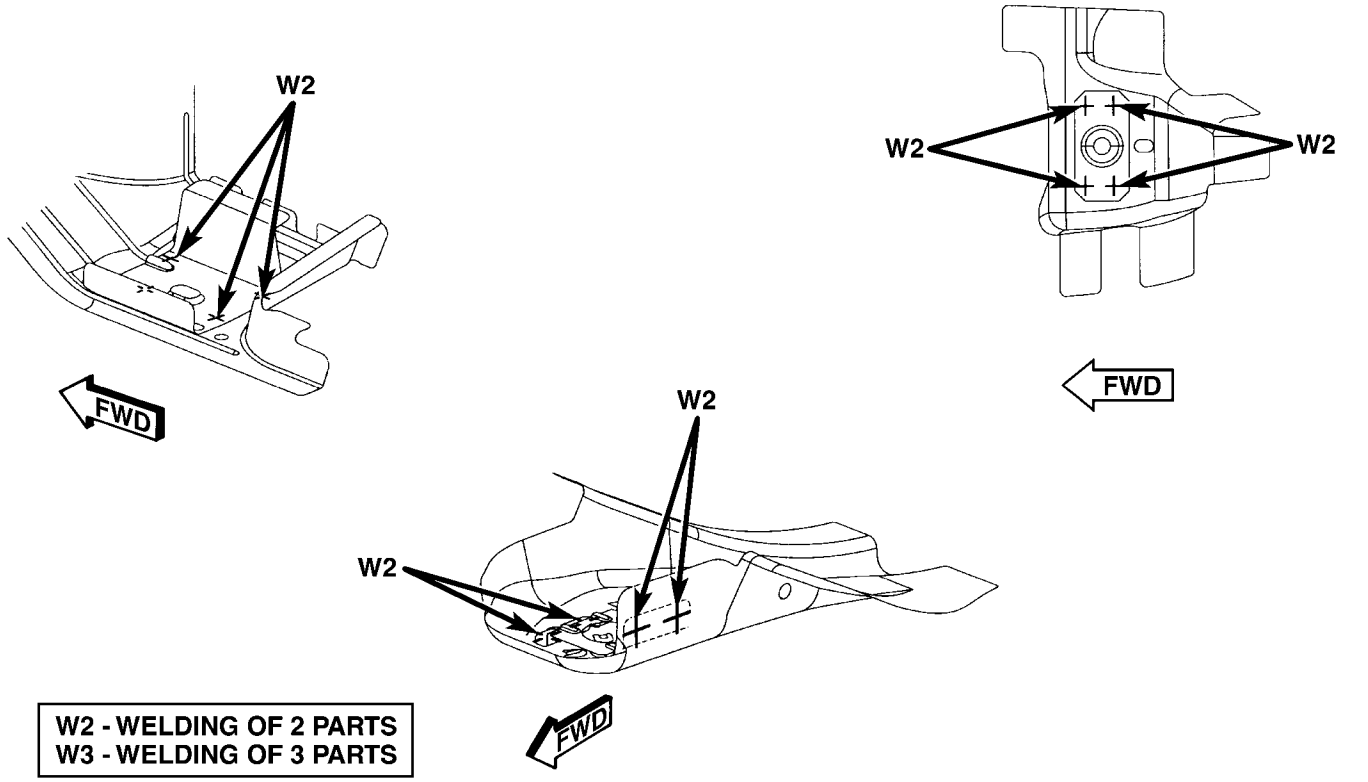

Fig. 152 FRONT SIDE RAIL REINFORCEMENT/SWAY BAR BRACKET TO TOPPING PLATE/FRONT SUSPENSION RETAINER TO FRONT SIDE RAIL PLATE

WELD LOCATIONS (Continued)

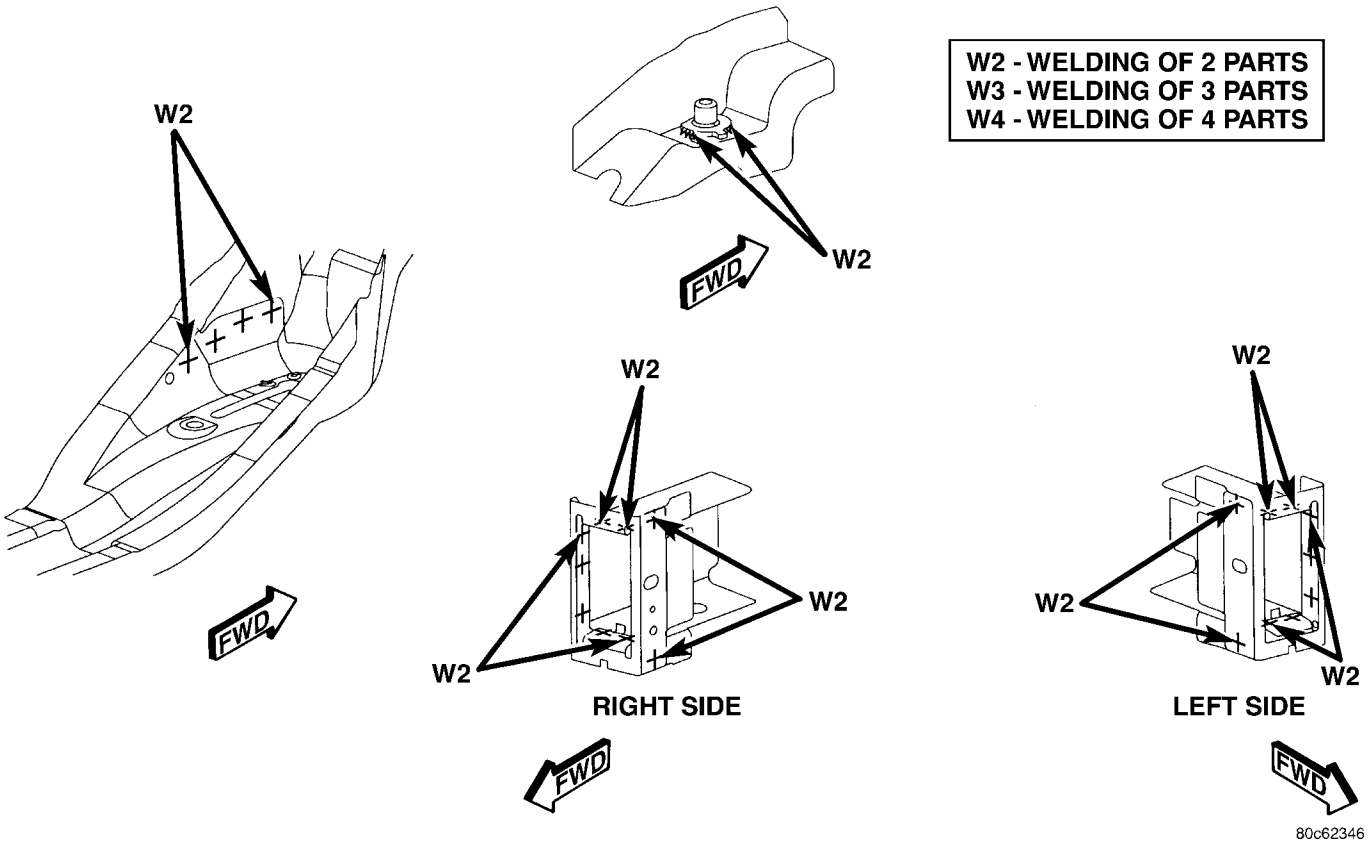

Fig. 153 BUMPER EXTENSION TO FRONT BUMPER MOUNTING BRACKET FRONT SIDE RAIL PLATE TO FRONT SIDE RAIL

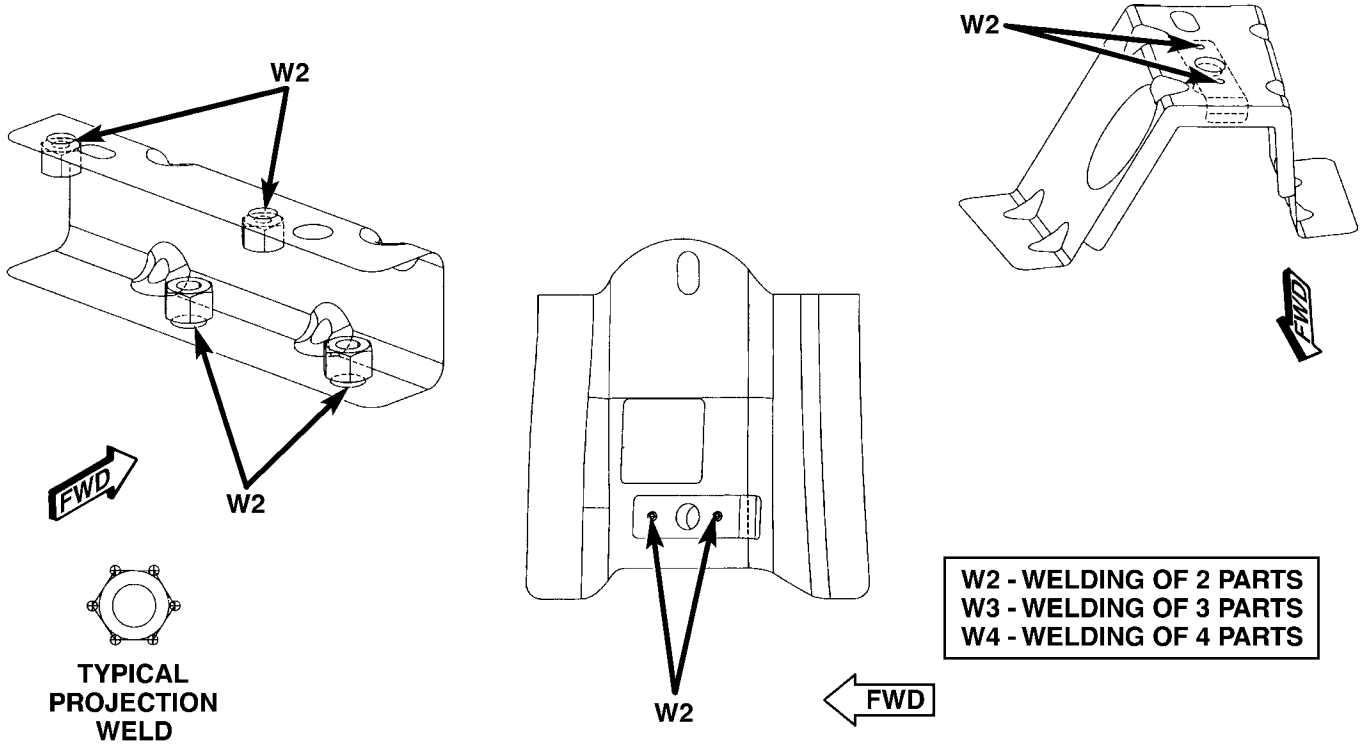

Fig. 154 WINDSHIELD WIPER TAPPING PLATE TO WINDSHIELD WIPER CENTER ATTACHING PLATE & LOWER WIPER MODULE PLENUM BRACKET

WELD LOCATIONS (Continued)

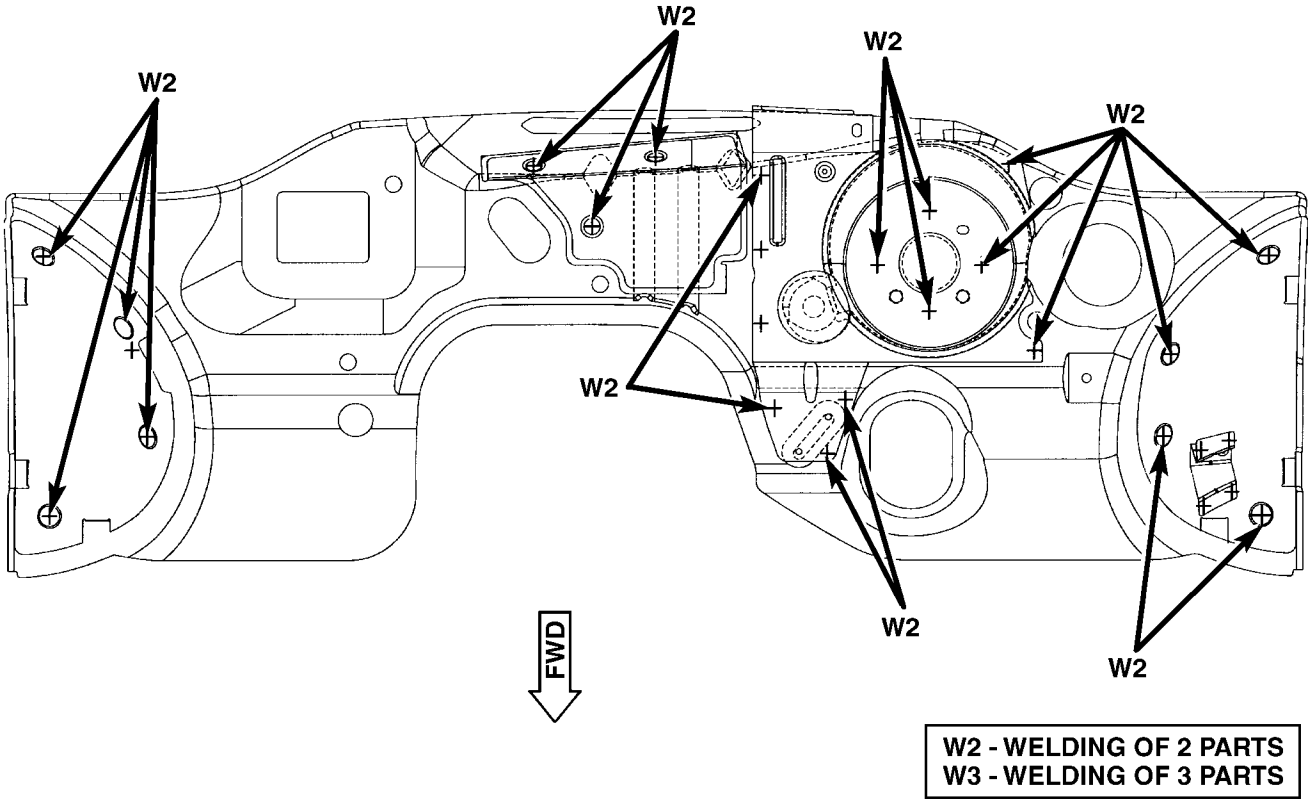

Fig. 155 WHEELHOUSE DEADENER PANEL & DASH PANEL DEADENER PANEL TO DASH PANEL

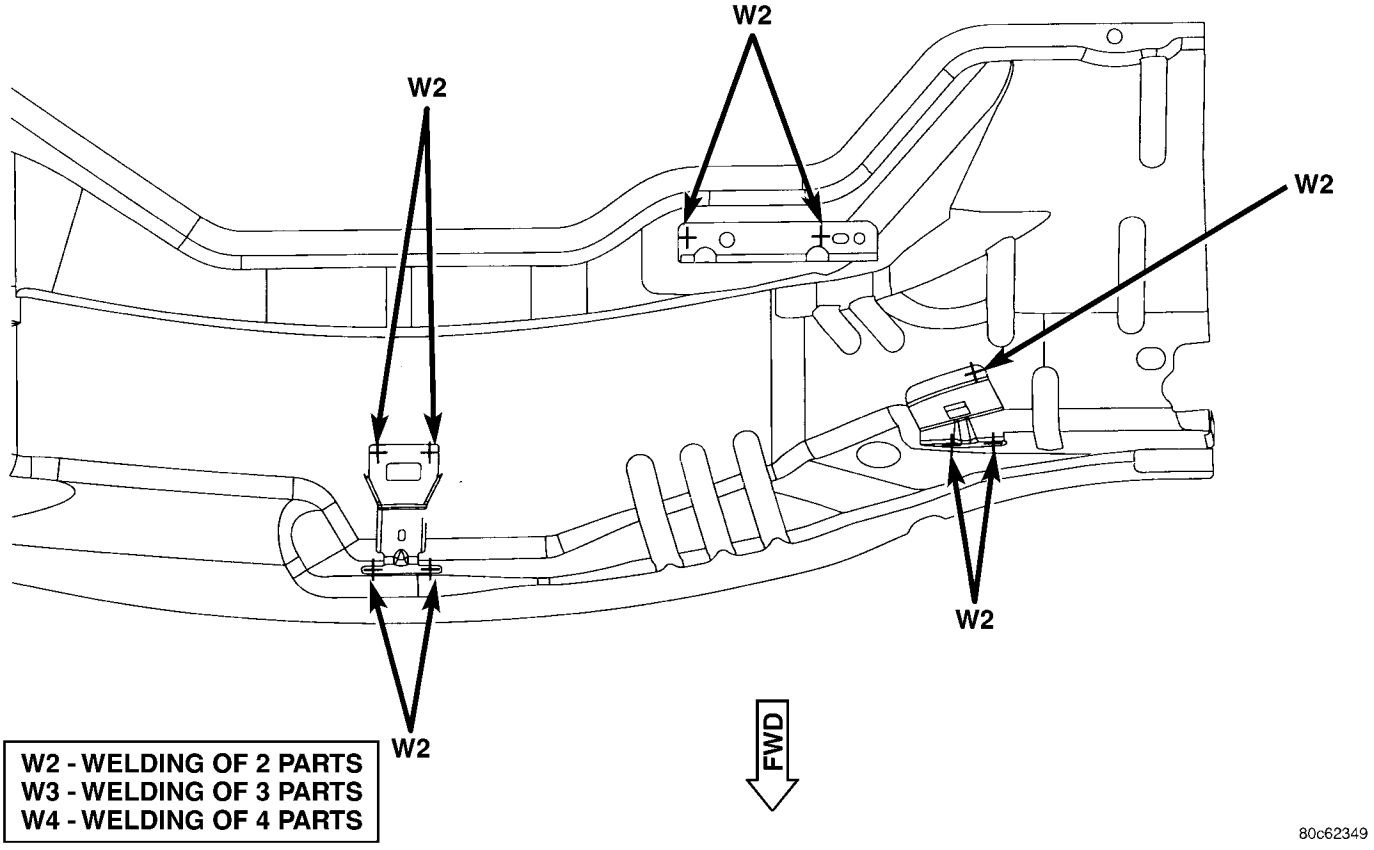

Fig. 156 PLENUM LOWER SUPPORT PLENUM CLOSURE & WINDSHIELD WIPER SUPPORT TO LOWER COWL PLENUM

WELD LOCATIONS (Continued)

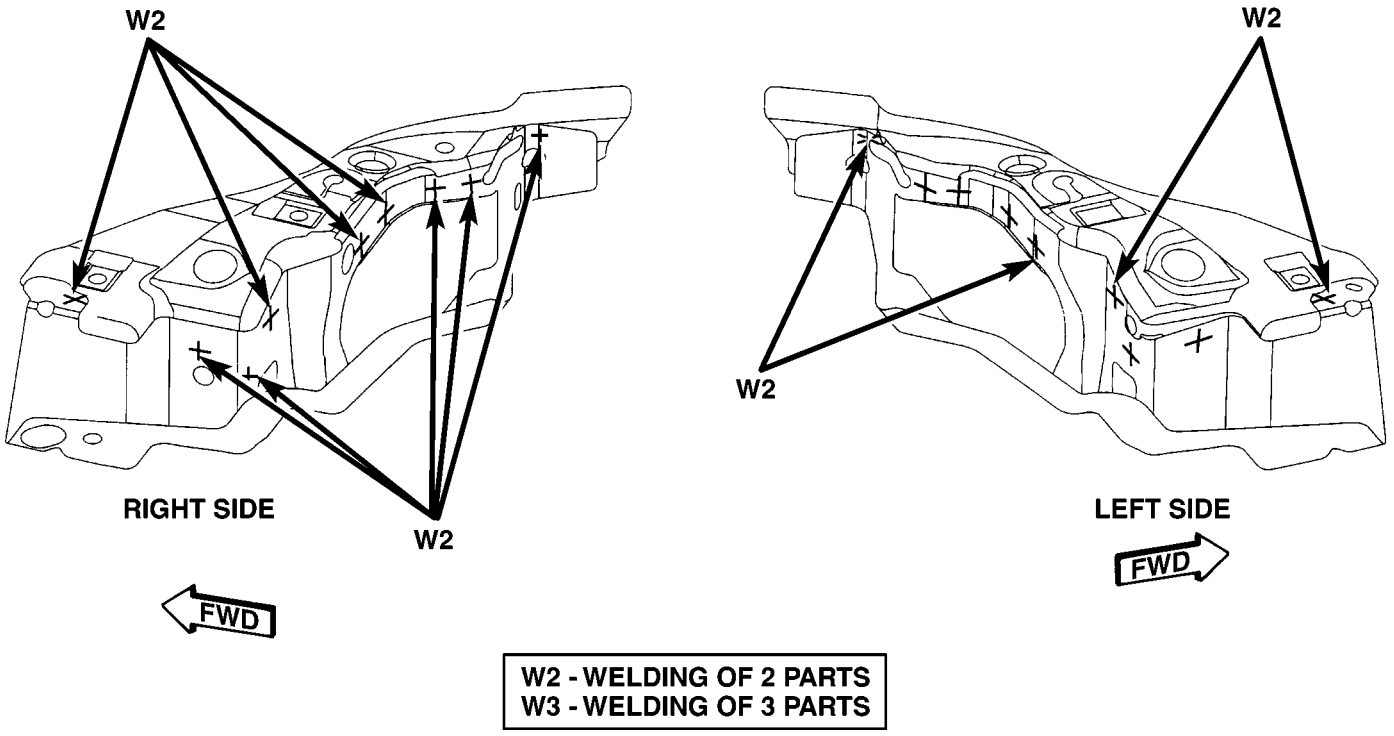

Fig. 157 HEADLAMP MOUNTING REINFORCEMENT TO HEADLAMP MOUNTING PANEL

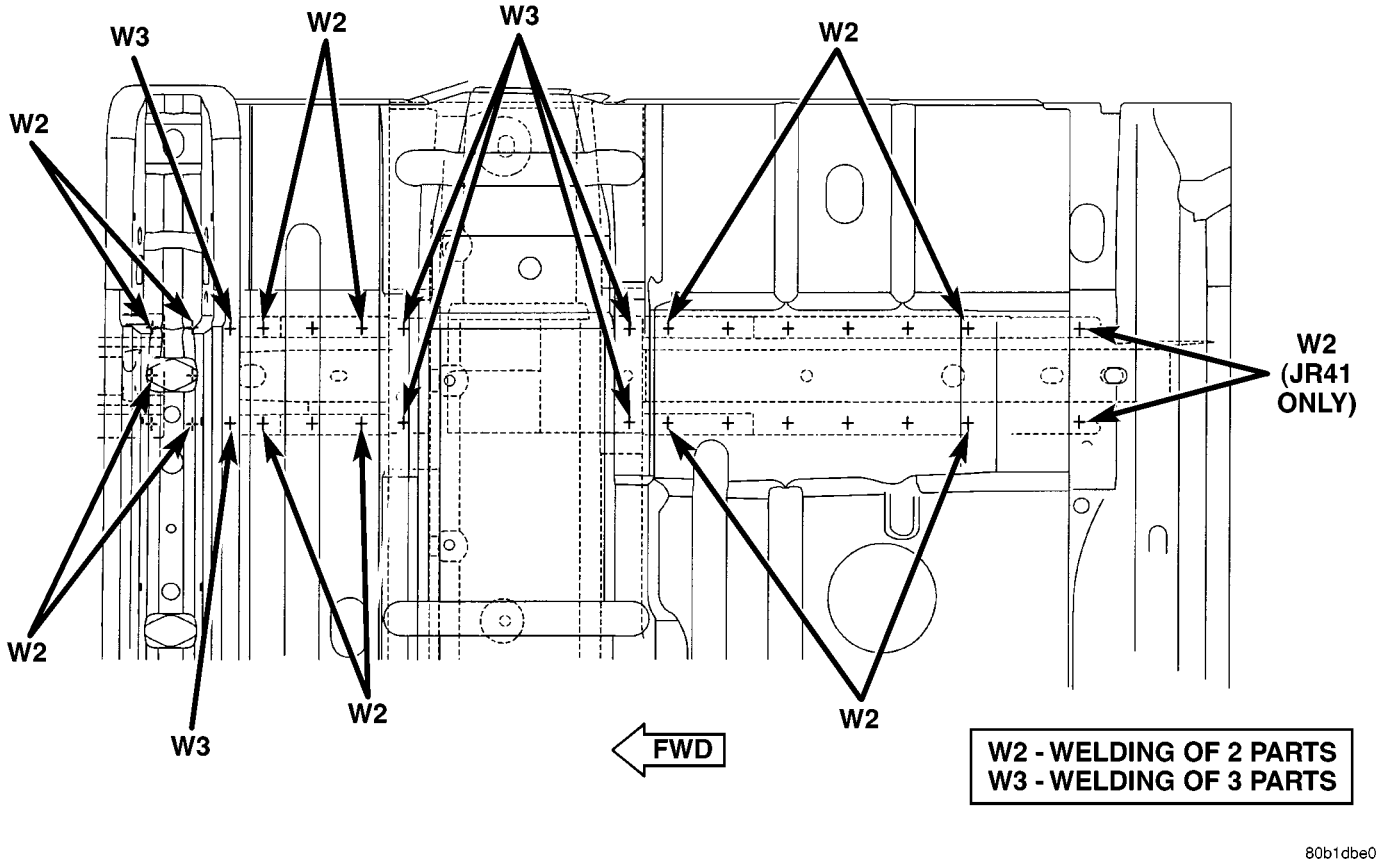

Fig. 158 FRONT FLOOR PAN RAIL EXTENSION & REINFORCEMENT TO FRONT FLOOR PAN RAIL

WELD LOCATIONS (Continued)

SPECIFICATIONS - WELD LOCATIONS - JR-27 ONLY

INDEX

DESCRIPTION	FIGURE
PARK BRAKE BRACKET AND SHIFTER MOUNTING STUDS TO FRONT CONSOLE MOUNTING BRACKET/SEAT TRACK REINFORCEMENT TO FRONT FLOOR PAN	159
REAR SEAT REINFORCEMENT REAR FLOOR PAN BRACKET AND INNER REAR WHEELHOUSE CROSSMEMBER SUPPORTS TO REAR FLOOR PAN	160
REAR SEAT REINFORCEMENT, REAR FLOOR PAN BRACKET AND SHOULDER BELT SUPPORT GUSSET TO REAR FLOOR PAN	161
REAR WHEELHOUSE CROSSMEMBER SUPPORT AND REAR FLOOR PAN BRACKET TO SHOULDER BELT SUPPORT GUSSET	162
SHOULDER BELT SUPPORT GUSSET AND INNER REAR WHEELHOUSE CROSSMEMBER SUPPORT TO REAR FLOOR PAN BRACKET	163
DECK OPENING REINFORCEMENT AND STRIKER PLATE REINFORCEMENT TO LOWER DECK OPENING	164
INNER BODY SIDE SILL TO COWL SIDE PANEL	165
SILL EXTERIOR PANEL AND REAR RAIL EXTENSION TO INNER SILL EXTENSION	166
REAR FLOOR PAN SIDE RAIL AND REAR BUMPER ATTACHING REINFORCEMENT TO REAR RAIL EXTENSION	167
OUTER WINDSHIELD FRAME TO INNER REINFORCEMENT TO INNER WINDSHIELD FRAME TO UPPER LOAD PATH BEAM	168
OUTER QUARTER PANEL REINFORCEMENT TO OUTER BELT REINFORCEMENT TO OUTER QUARTER PANEL	169
OUTER QUARTER PANEL TO QUARTER PANEL REINFORCEMENT TO INNER QUARTER PANEL	170
OUTER BODY SIDE PANEL TO FRONT OUTER QUARTER PANEL REINFORCEMENT	171
OUTER REAR WHEELHOUSE TO OUTER QUARTER PANEL REINFORCEMENT	172
OUTER REAR WHEELHOUSE TO OUTER QUARTER PANEL	173
INNER QUARTER WHEELHOUSE EXTENSION TO OUTER QUARTER WHEELHOUSE	174
INNER REAR QUARTER PANEL TO REAR LOWER QUARTER PANEL EXTENSION	175
REAR REINFORCEMENT BRACKET TO REAR SEAT FLOOR PAN REINFORCEMENT TO REAR INNER QUARTER PANEL	176
LOWER WINDSHIELD HEADER TO UPPER WINDSHIELD HEADER	177
OUTER WINDSHIELD SIDE FRAME TO INNER WINDSHIELD SIDE FRAME	178
INNER AND OUTER WINDSHIELD FRAME TO OUTER BODY SIDE PANEL TO INNER UPPER LOAD PATH BEAM	179
INNER AND OUTER BODY SIDE SILL TO COWL SIDE PANEL	180
INNER BODY SIDE SILL TO OUTER BODY SIDE PANEL TO INNER SIDE SILL EXTENSION	181
INNER REAR WHEELHOUSE TO INNER QUARTER PANEL TO REAR INNER WHEELHOUSE QUARTER EXTENSION	182
LOWER OUTER QUARTER PANEL EXTENSION TO REAR INNER QUARTER PANEL TO REAR INNER WHEELHOUSE	183
REAR INNER QUARTER PANEL TO INNER WHEELHOUSE EXTENSION TO FRONT INNER QUARTER PANEL	184
LOWER REAR QUARTER PANEL EXTENSION TO REAR FLOOR PAN AND LOWER DECK PANEL	185

WELD LOCATIONS (Continued)

DESCRIPTION	FIGURE
FRONT UPPER DECK PANEL TROUGH TO UPPER DECK PANEL TROUGH	186
UPPER DECK TROUGH PANEL TO UPPER DECK PANEL FRONT REINFORCEMENT TO DECK PANEL REAR REINFORCEMENT	187
WHEELHOUSE UPPER DECK REINFORCEMENT TO UPPER DECK REAR REINFORCEMENT AND UPPER FRONT REINFORCEMENT	188
UPPER DECK PANEL FRONT REINFORCEMENT TO WHEELHOUSE UPPER DECK REINFORCEMENT EXTENSION	189
FRONT CONSOLE BRACKET TO FRONT FLOOR PAN	190

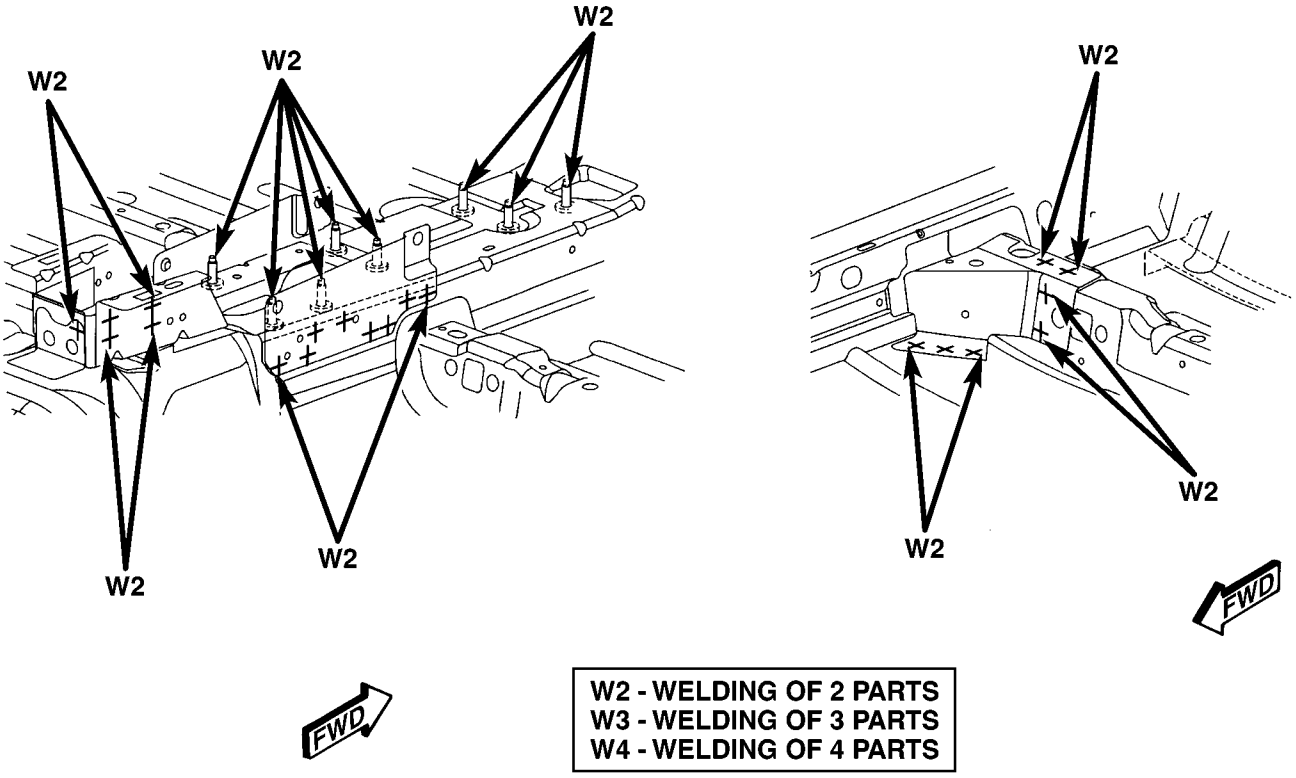

Fig. 159 PARK BRAKE BRACKET AND SHIFTER MOUNTING STUDS TO FRONT CONSOLE MOUNTING BRACKET/SEAT TRACK REINFORCEMENT TO FRONT FLOOR PAN

WELD LOCATIONS (Continued)

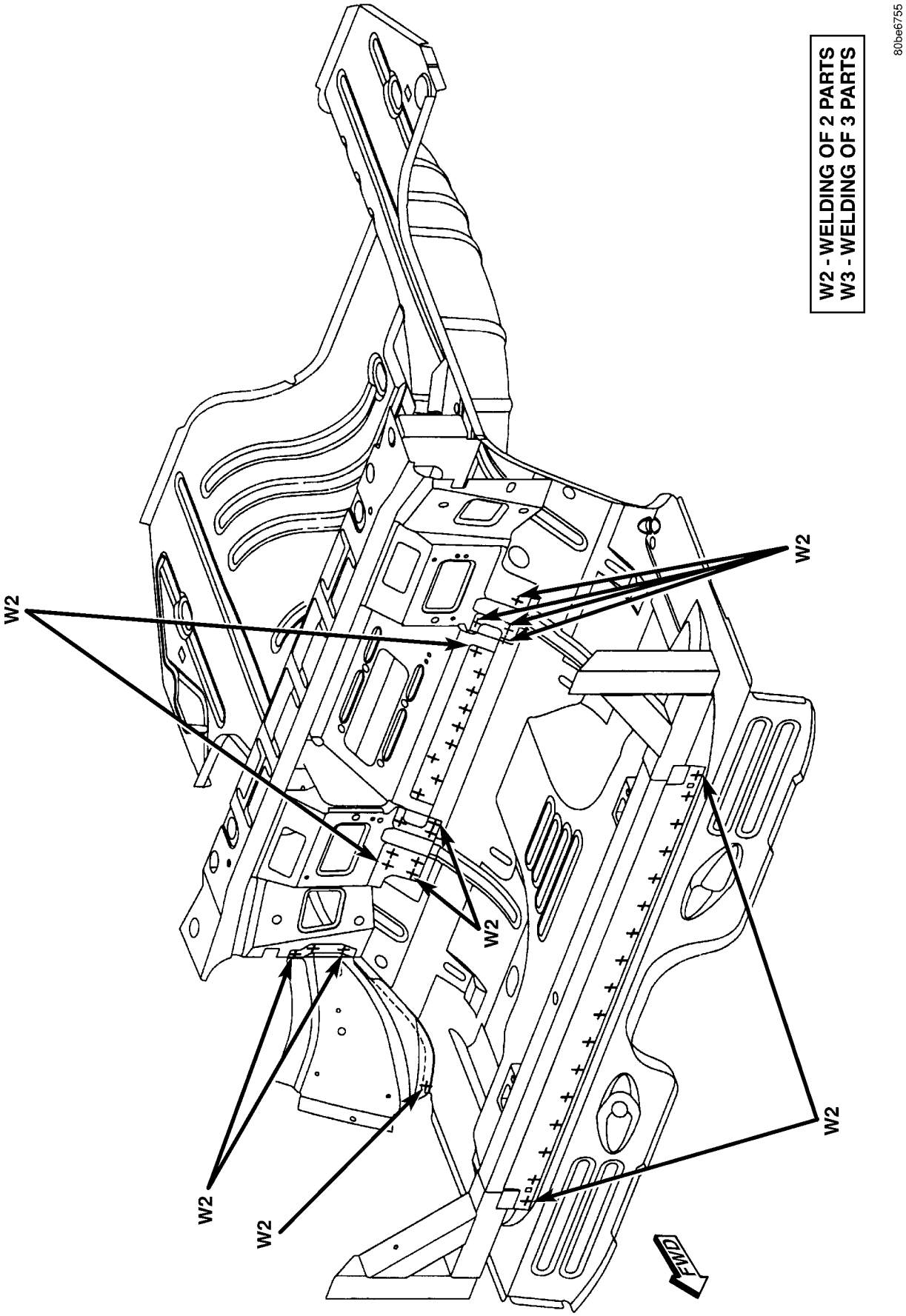

Fig. 160 REAR SEAT REINFORCEMENT REAR FLOOR PAN BRACKET AND INNER REAR WHEELHOUSE CROSSMEMBER SUPPORTS TO REAR FLOOR PAN

WELD LOCATIONS (Continued)

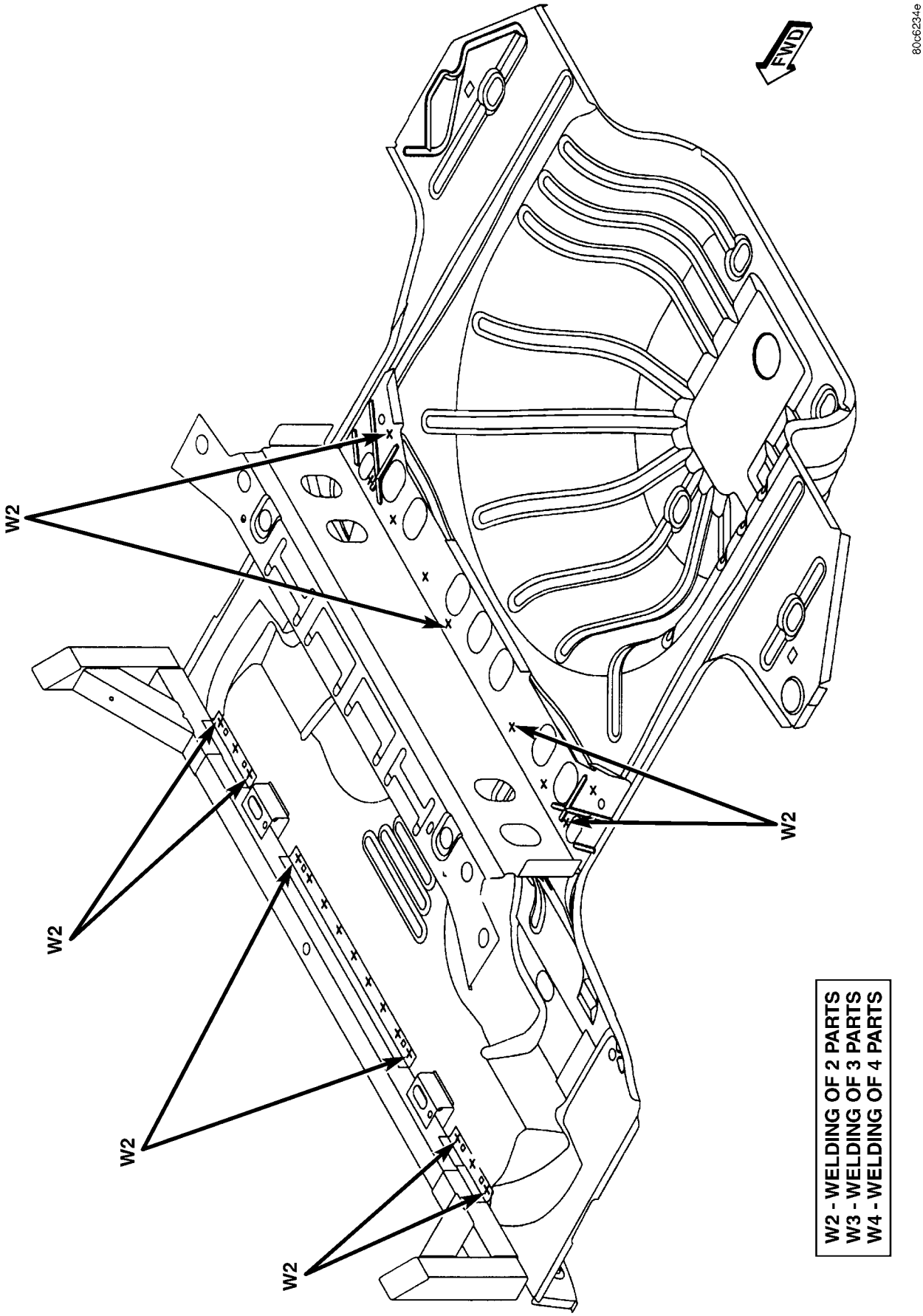

Fig. 161 REAR SEAT REINFORCEMENT, REAR FLOOR PAN BRACKET AND SHOULDER BELT SUPPORT GUSSET TO REAR FLOOR PAN

WELD LOCATIONS (Continued)

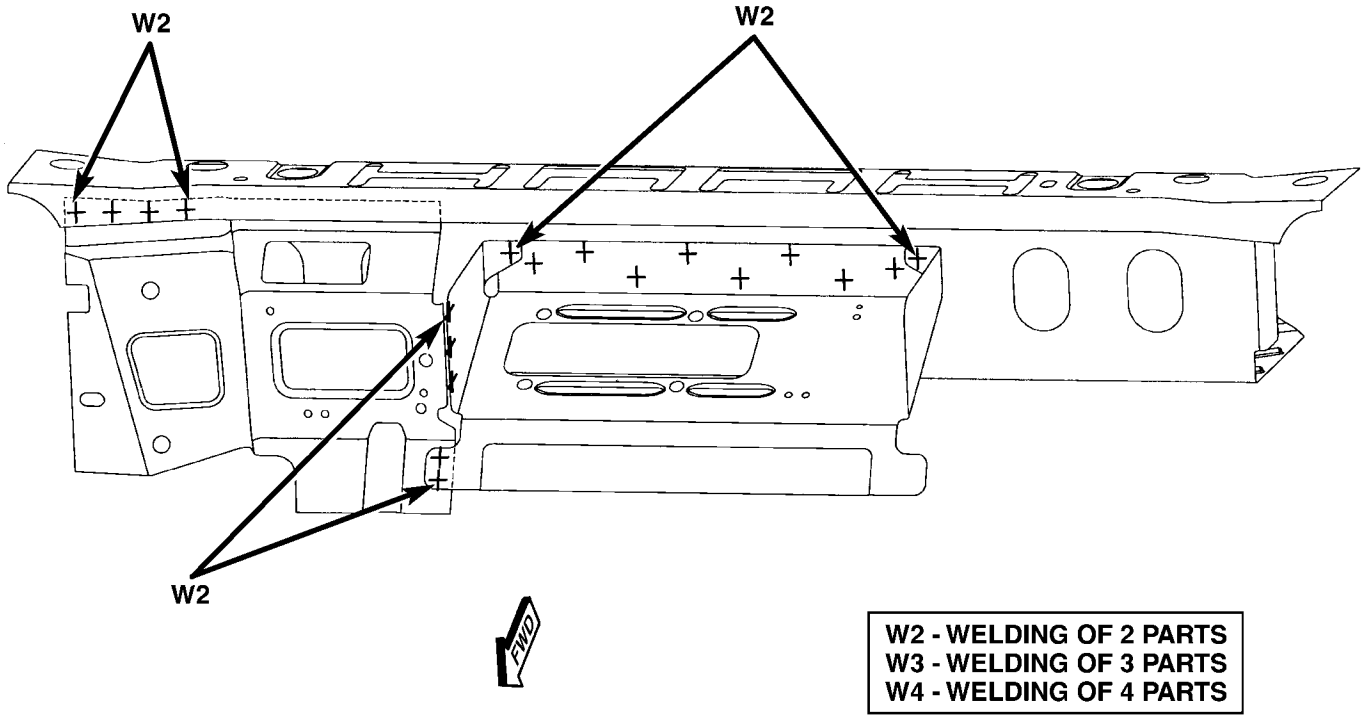

80c6234f

Fig. 162 REAR WHEELHOUSE CROSSMEMBER SUPPORT AND REAR FLOOR PAN BRACKET TO SHOULDER BELT SUPPORT GUSSET

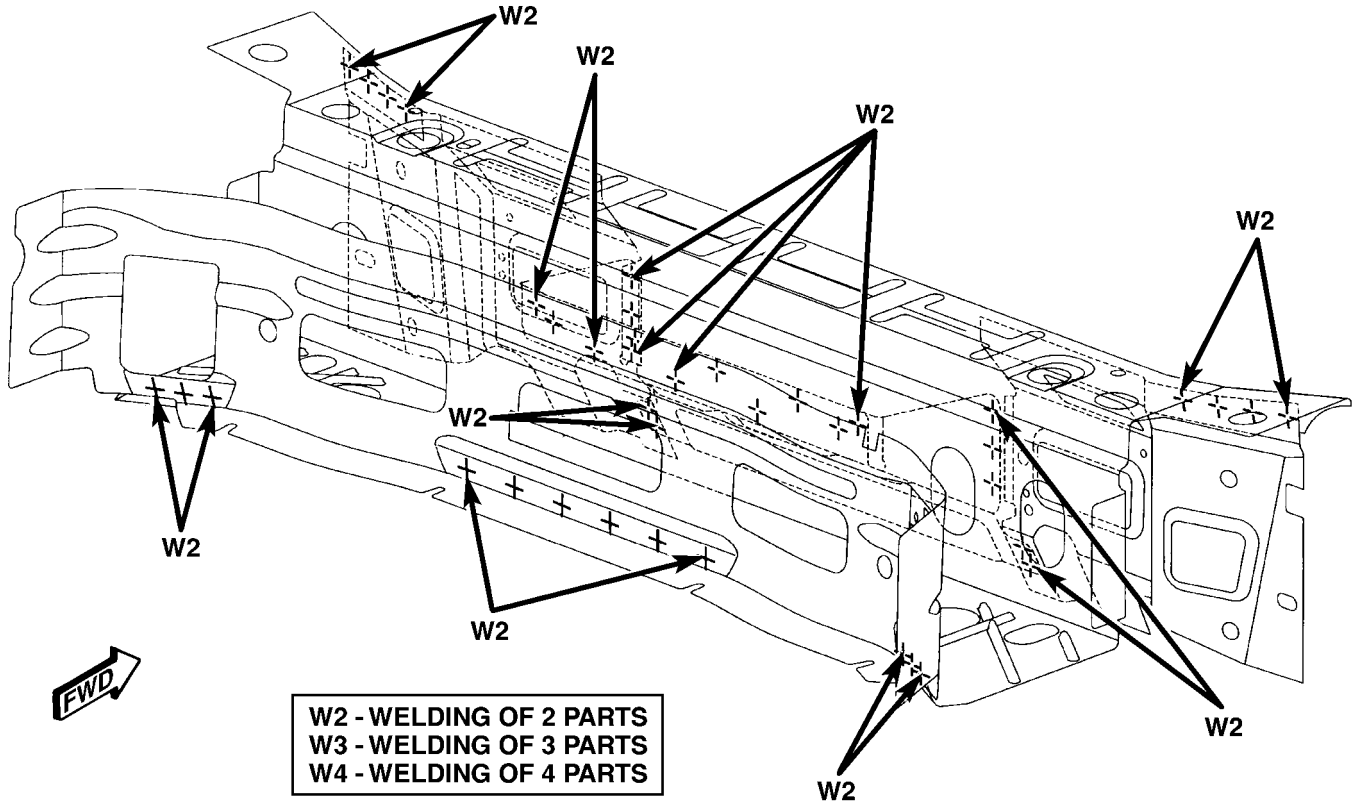

80c62353

Fig. 163 SHOULDER BELT SUPPORT GUSSET AND INNER REAR WHEELHOUSE CROSSMEMBER SUPPORT TO REAR FLOOR PAN BRACKET

WELD LOCATIONS (Continued)

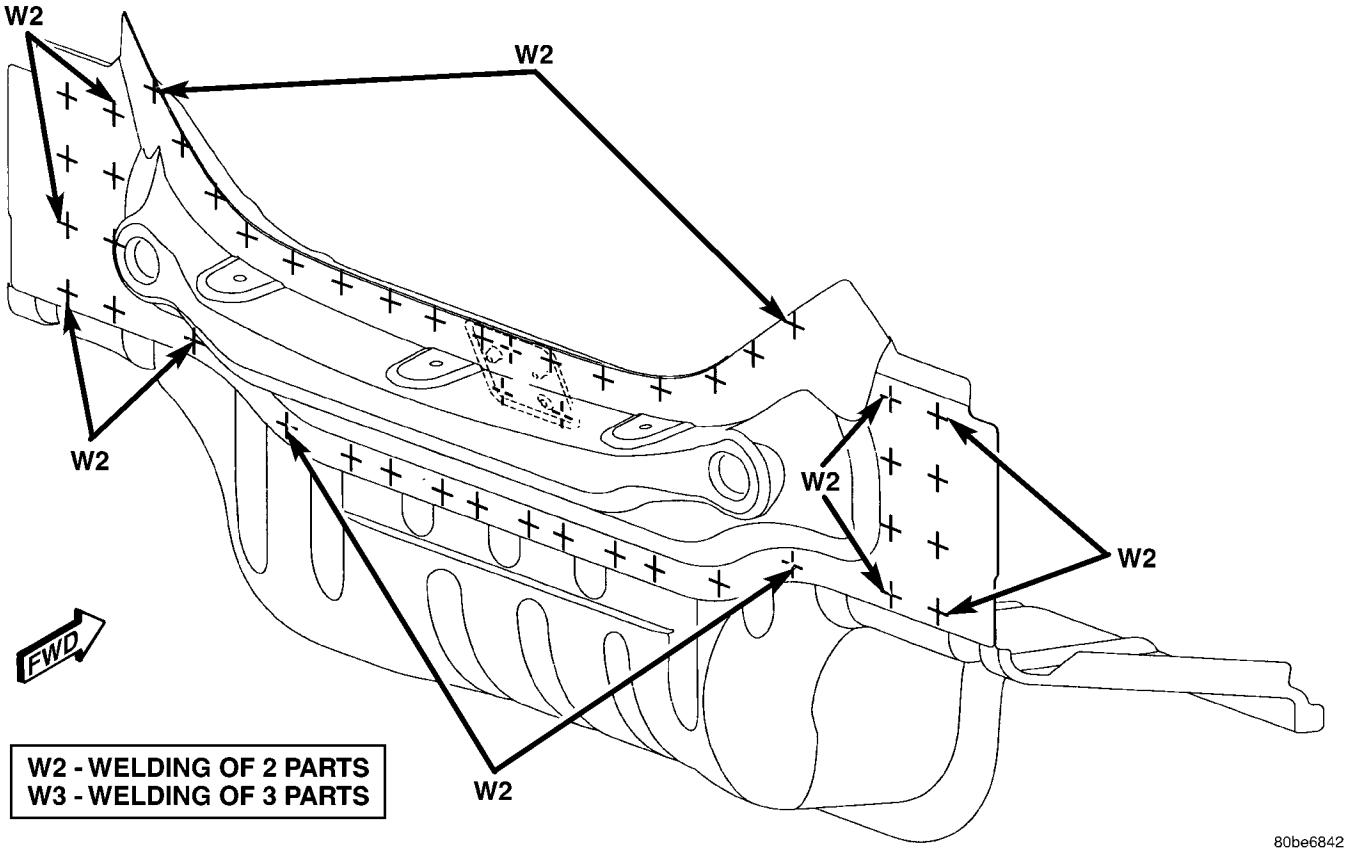

Fig. 164 DECK OPENING REINFORCEMENT AND STRIKER PLATE REINFORCEMENT TO LOWER DECK OPENING

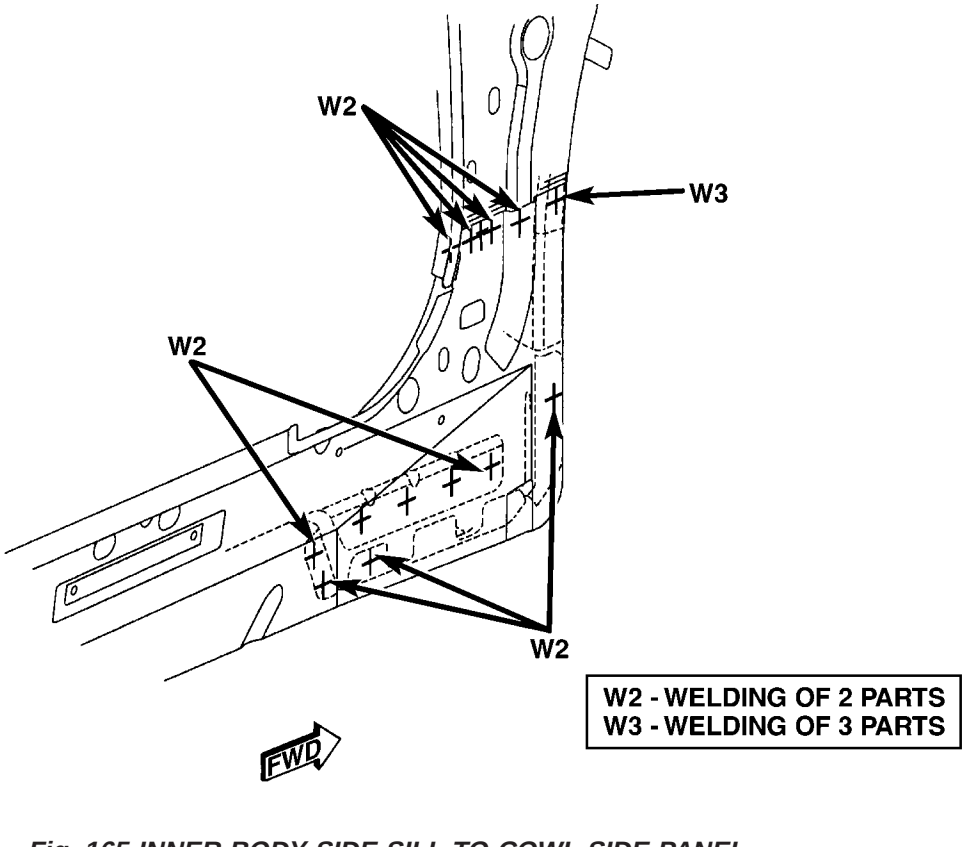

Fig. 165 INNER BODY SIDE SILL TO COWL SIDE PANEL

WELD LOCATIONS (Continued)

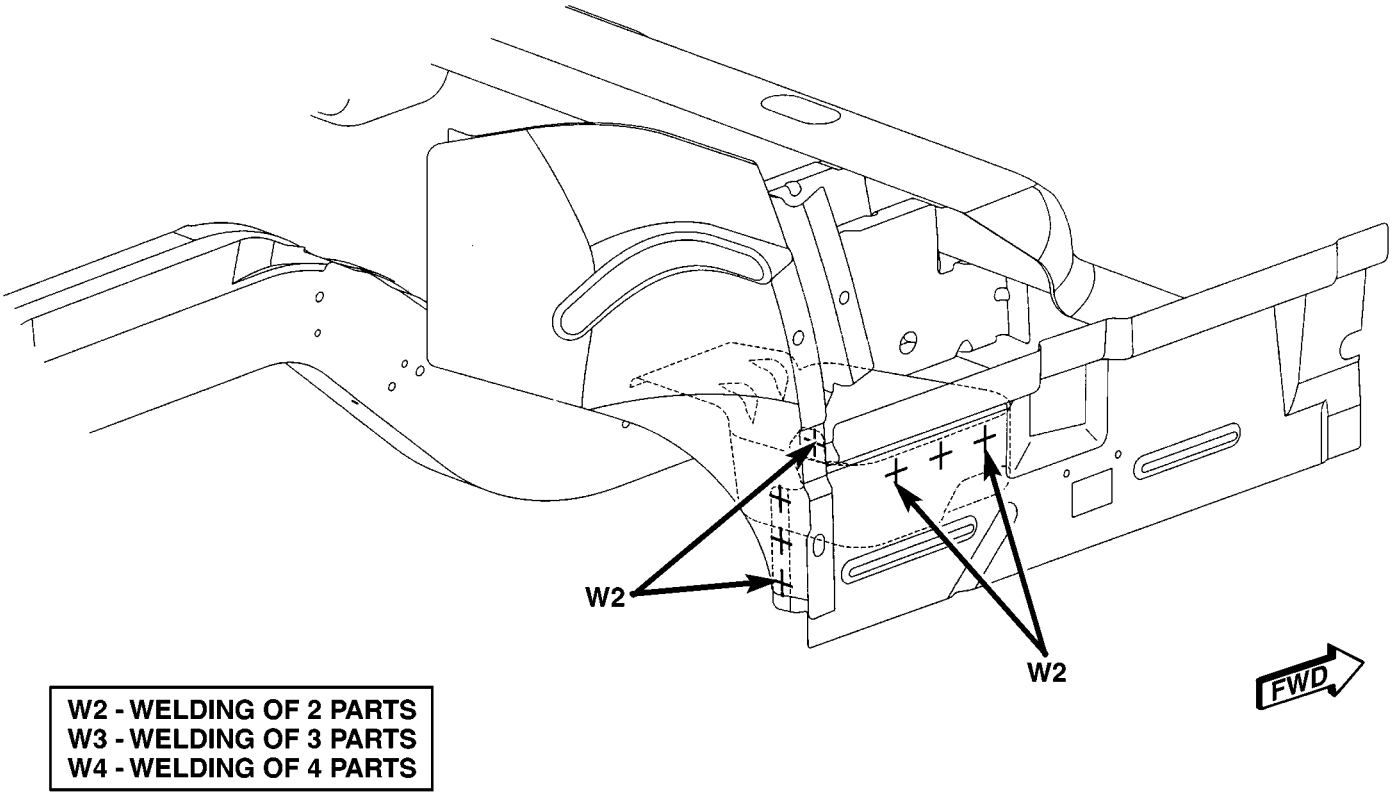

Fig. 166 SILL EXTERIOR PANEL AND REAR RAIL EXTENSION TO INNER SILL EXTENSION

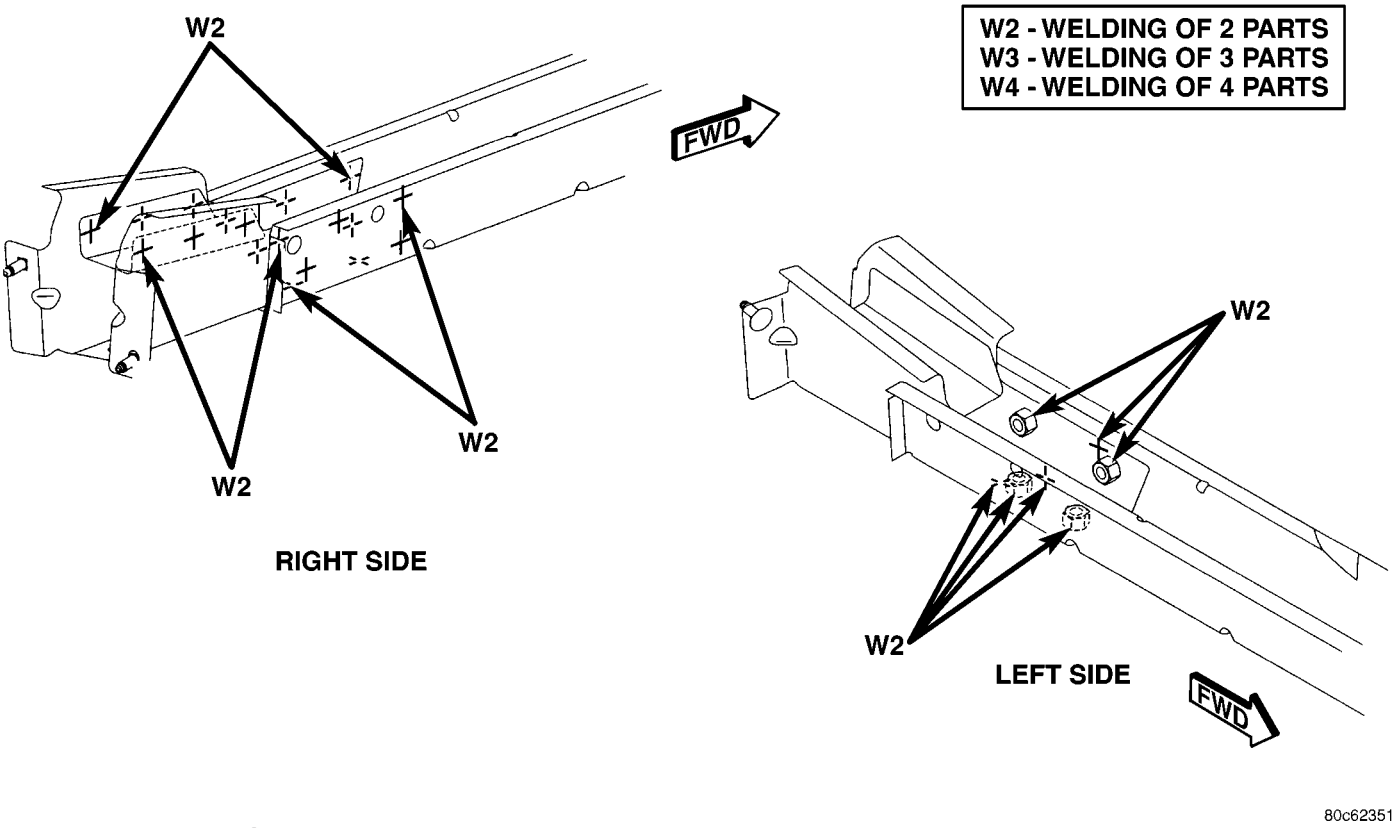

Fig. 167 REAR FLOOR PAN SIDE RAIL AND REAR BUMPER ATTACHING REINFORCEMENT TO REAR RAIL EXTENSION

WELD LOCATIONS (Continued)

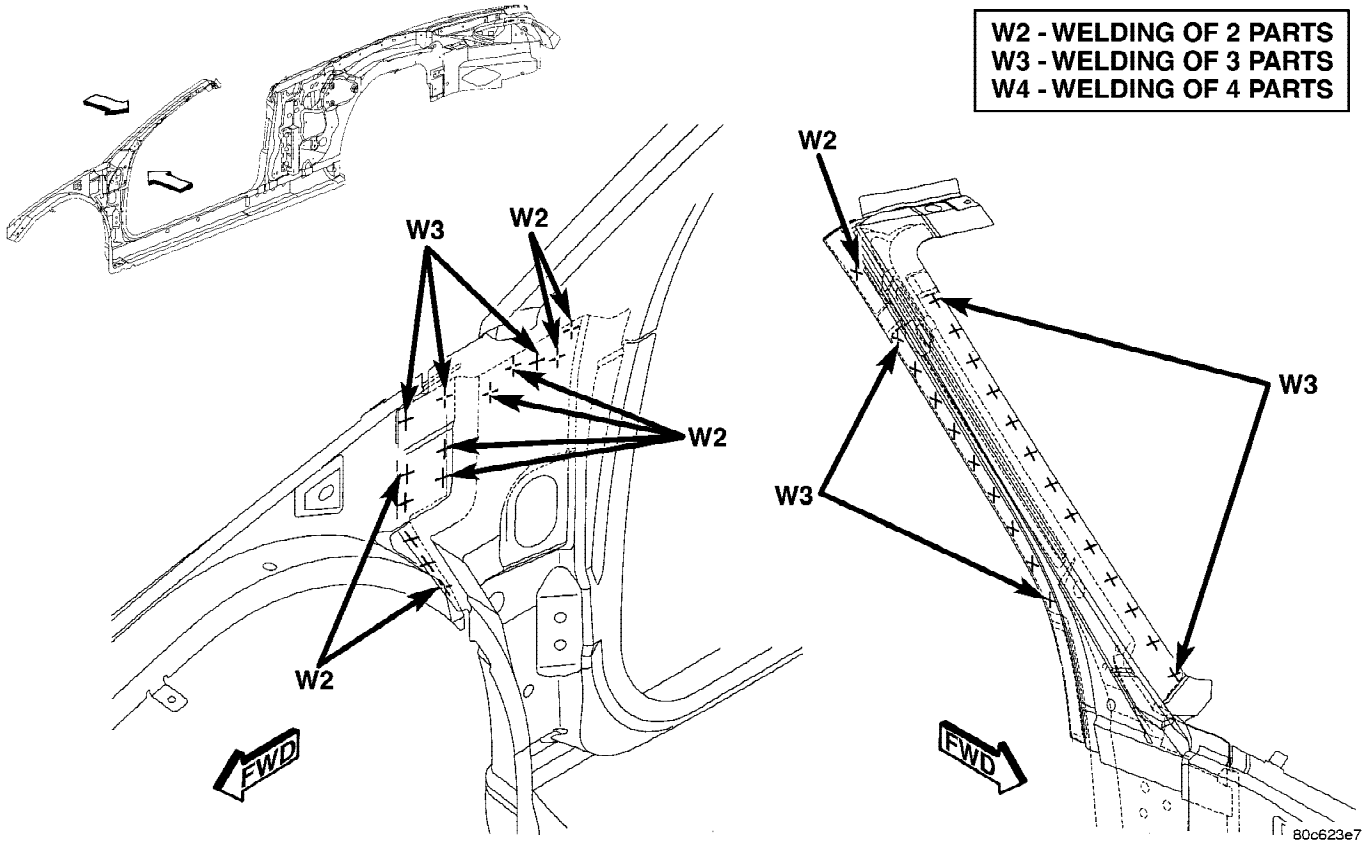

Fig. 168 OUTER WINDSHIELD FRAME TO INNER REINFORCEMENT TO INNER WINDSHIELD FRAME TO UPPER LOAD PATH BEAM

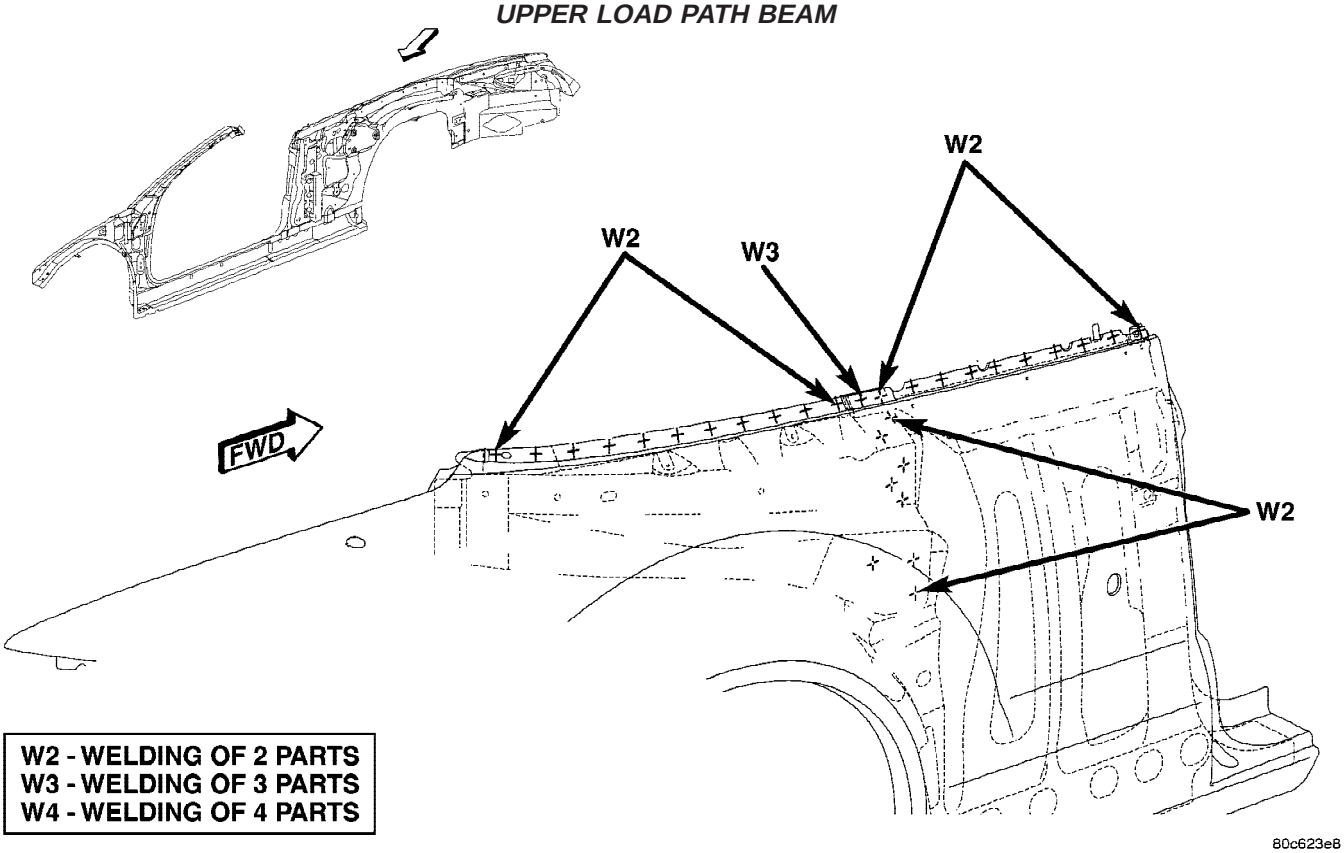

Fig. 169 OUTER QUARTER PANEL REINFORCEMENT TO OUTER BELT REINFORCEMENT TO OUTER QUARTER PANEL

WELD LOCATIONS (Continued)

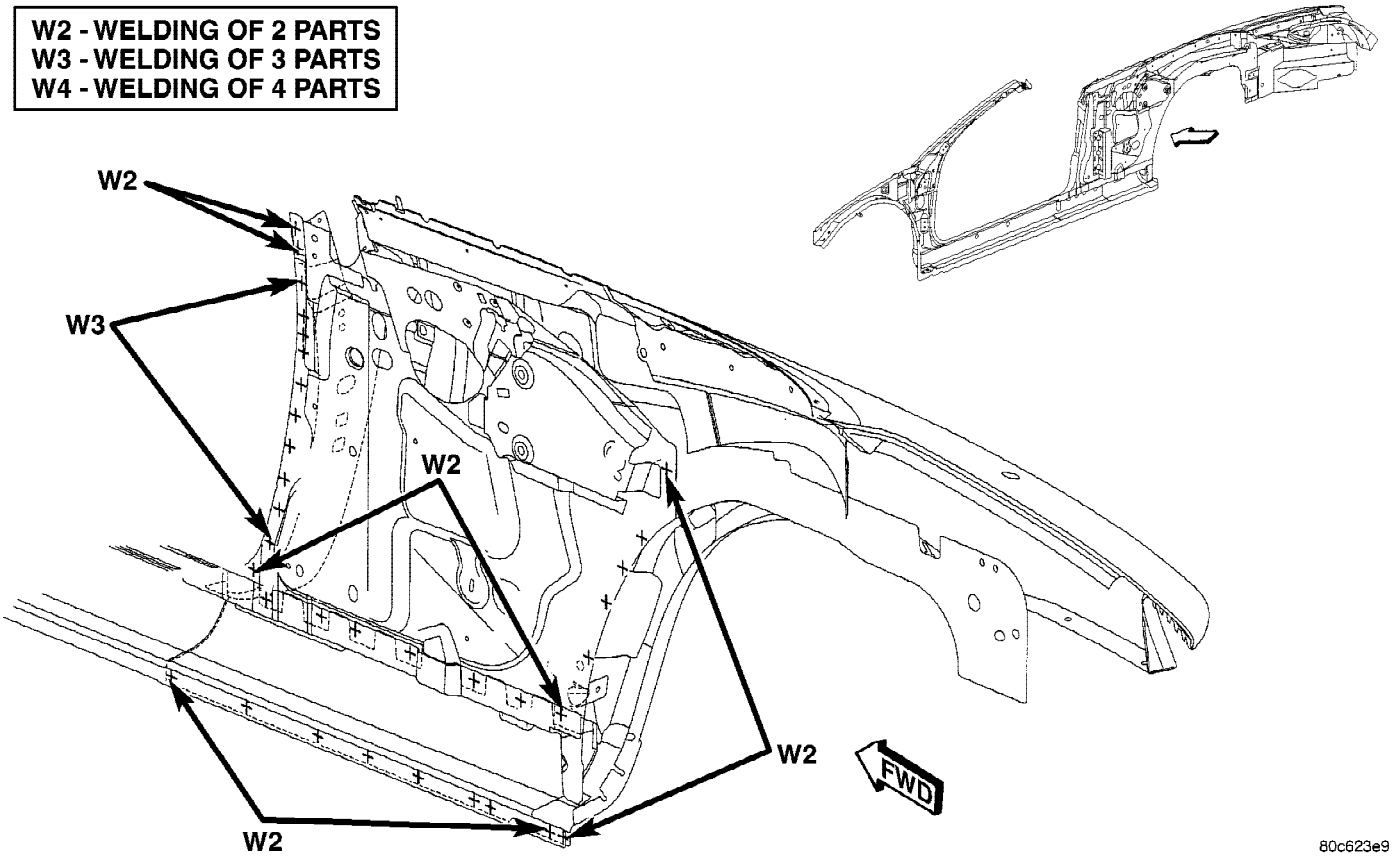

Fig. 170 OUTER QUARTER PANEL TO QUARTER PANEL REINFORCEMENT TO INNER QUARTER PANEL

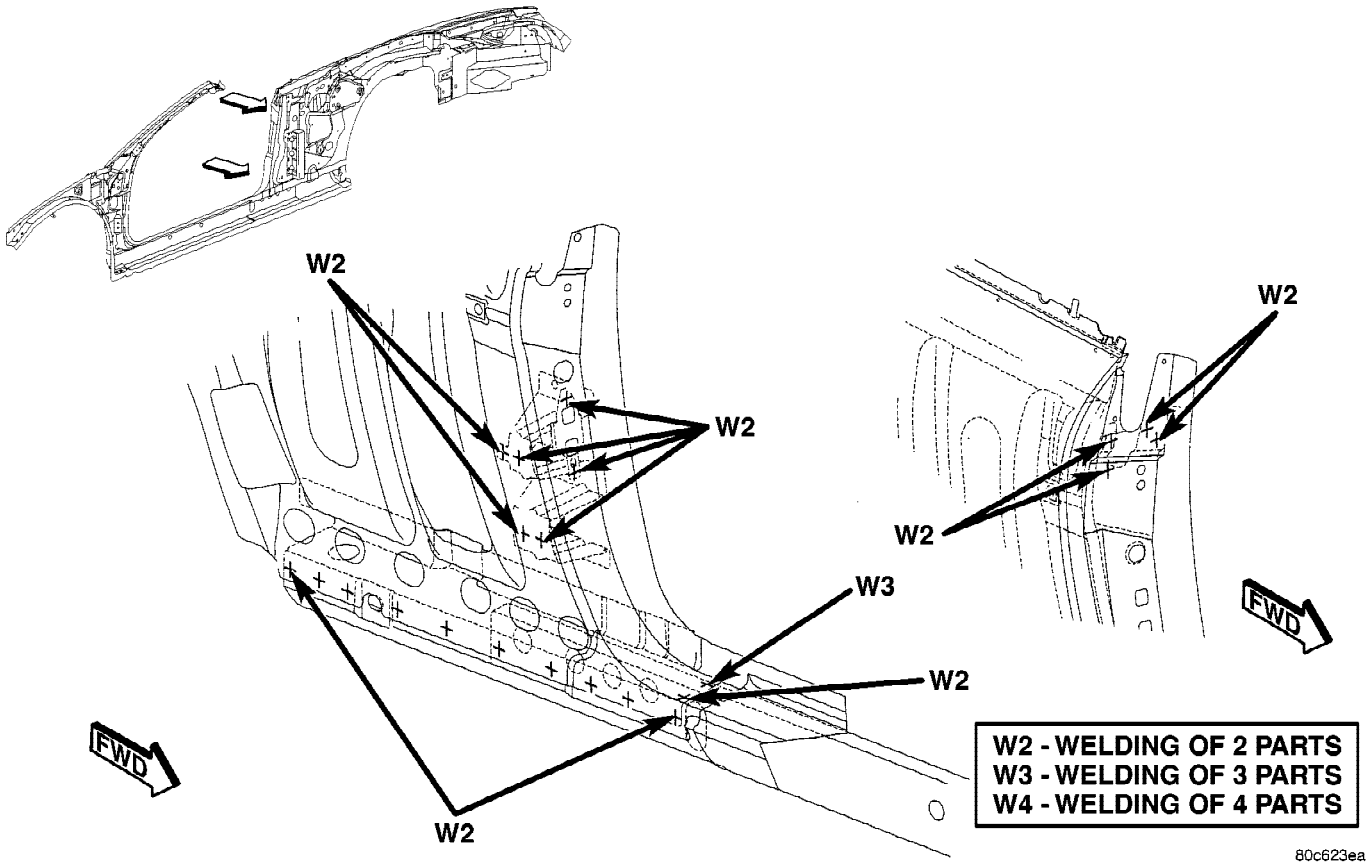

Fig. 171 OUTER BODY SIDE PANEL TO FRONT OUTER QUARTER PANEL REINFORCEMENT

WELD LOCATIONS (Continued)

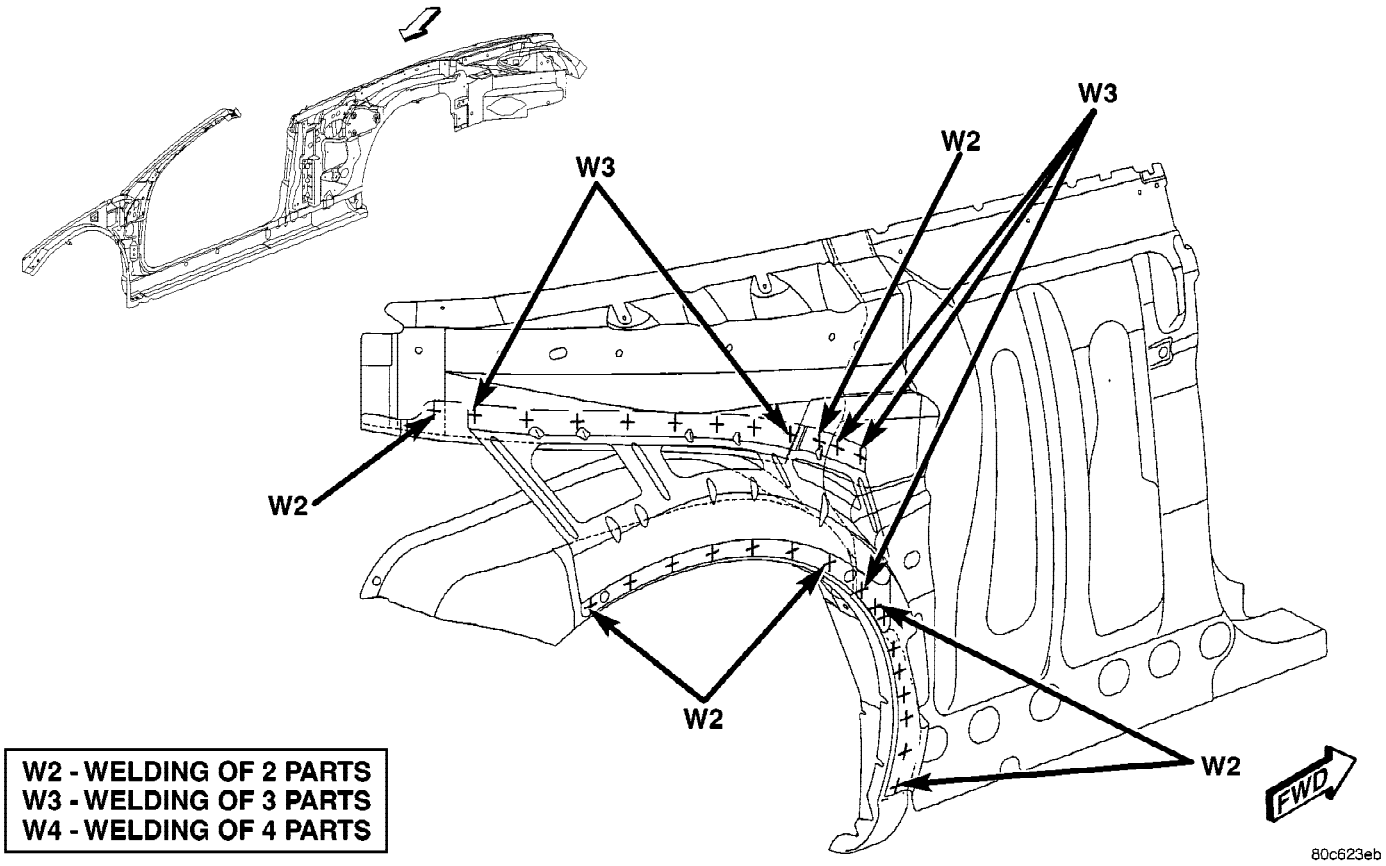

Fig. 172 OUTER REAR WHEELHOUSE TO OUTER QUARTER PANEL REINFORCEMENT

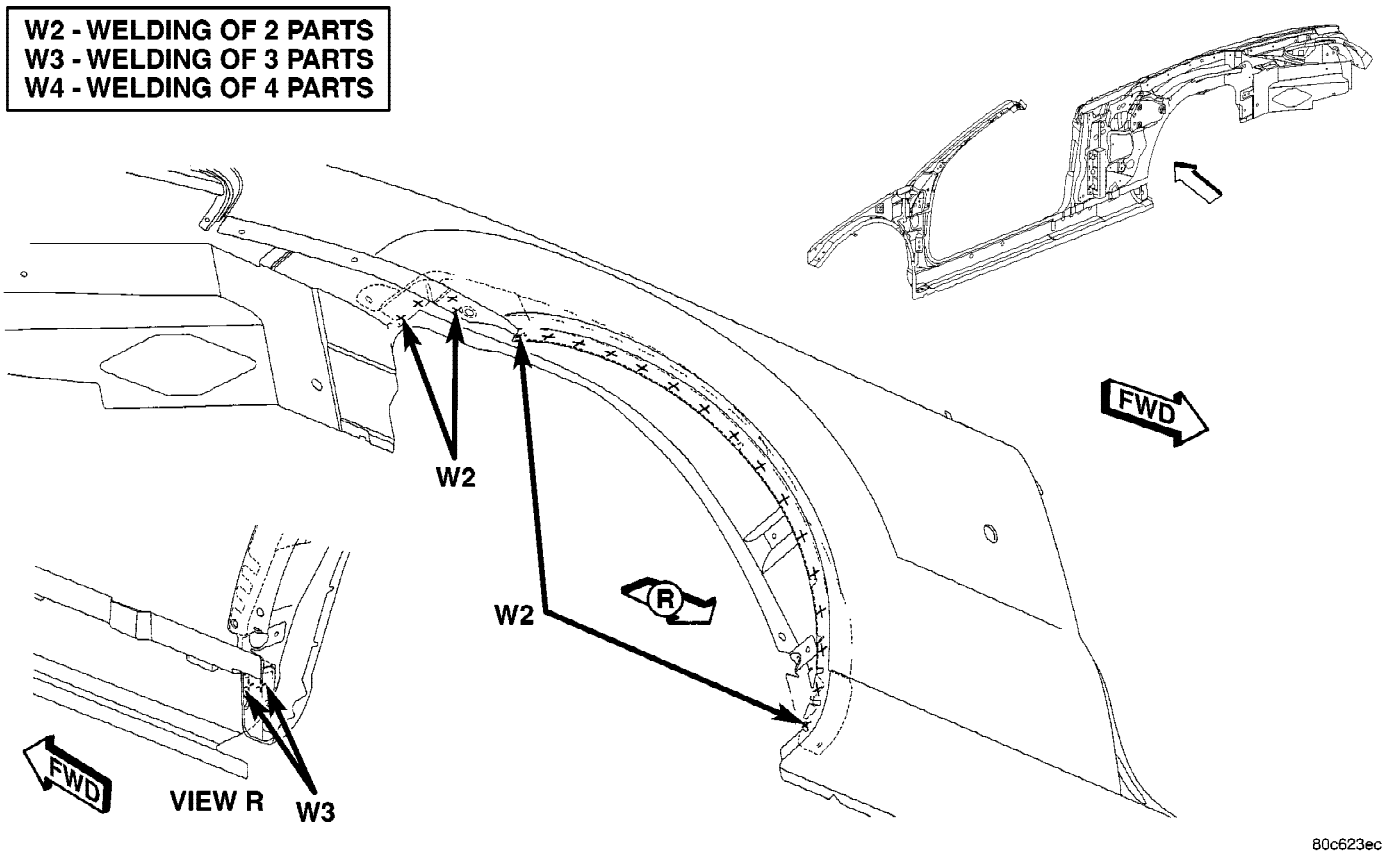

Fig. 173 OUTER REAR WHEELHOUSE TO OUTER QUARTER PANEL

WELD LOCATIONS (Continued)

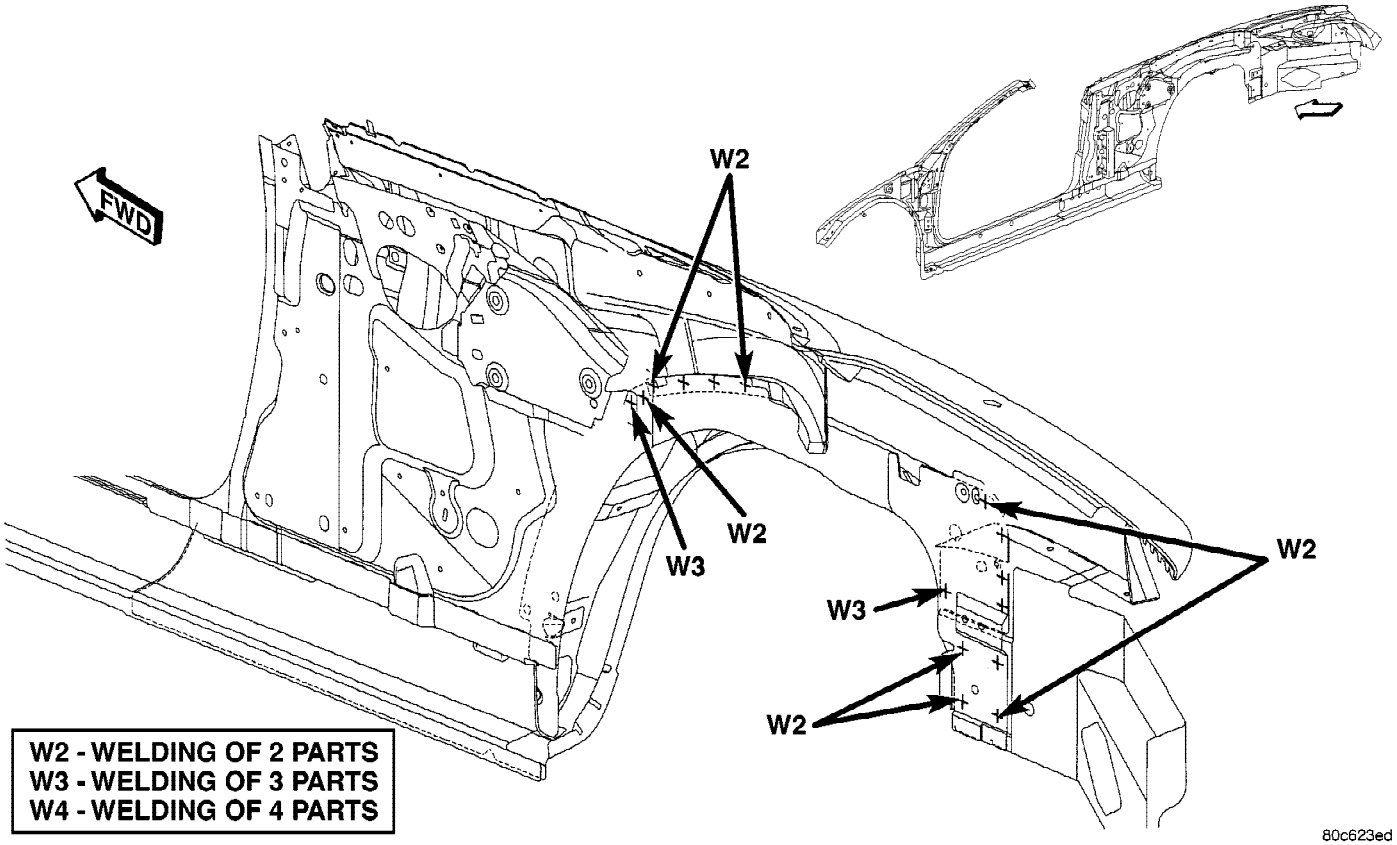

Fig. 174 INNER QUARTER WHEELHOUSE EXTENSION TO OUTER QUARTER WHEELHOUSE

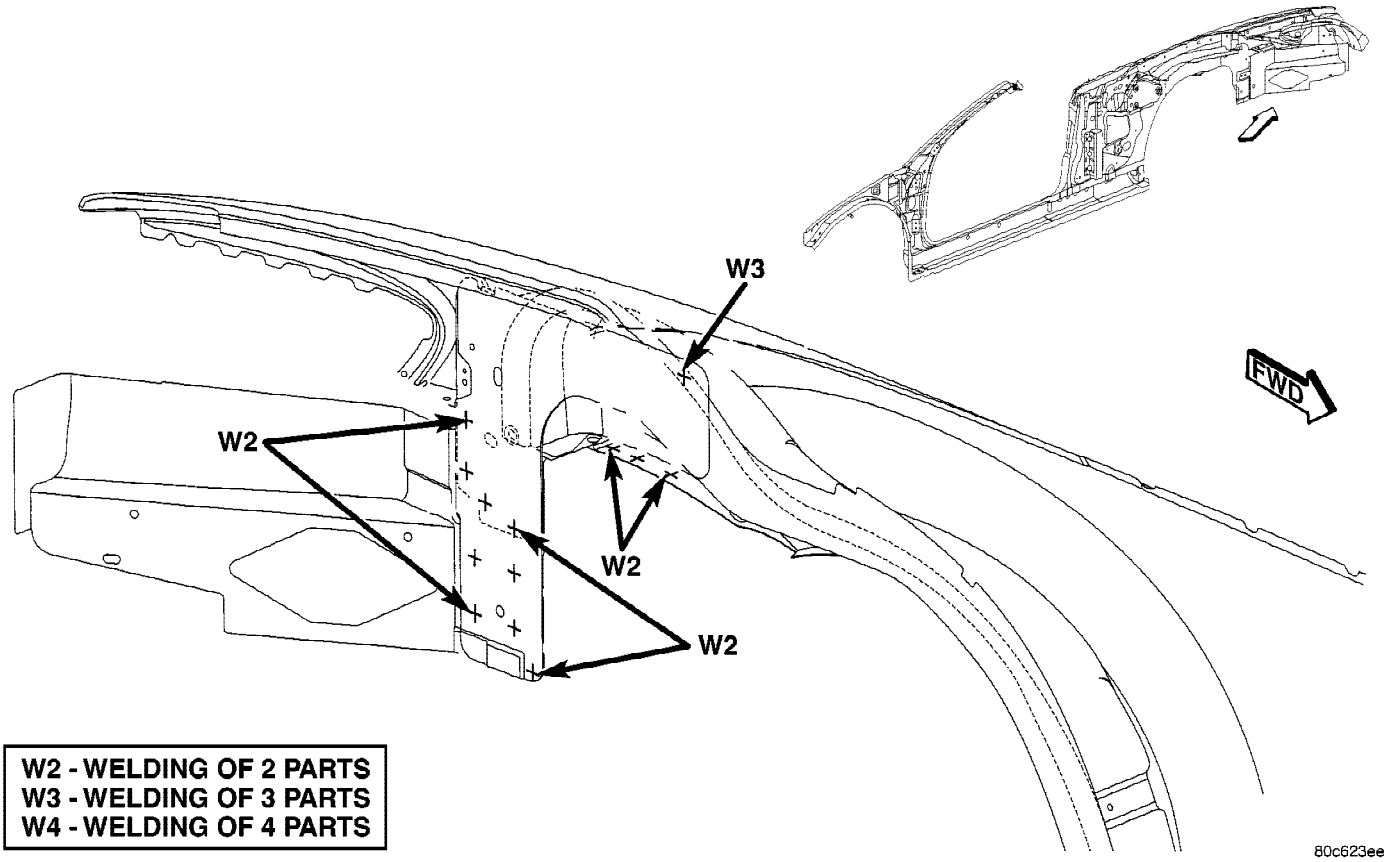

Fig. 175 INNER REAR QUARTER PANEL TO REAR LOWER QUARTER PANEL EXTENSION

WELD LOCATIONS (Continued)

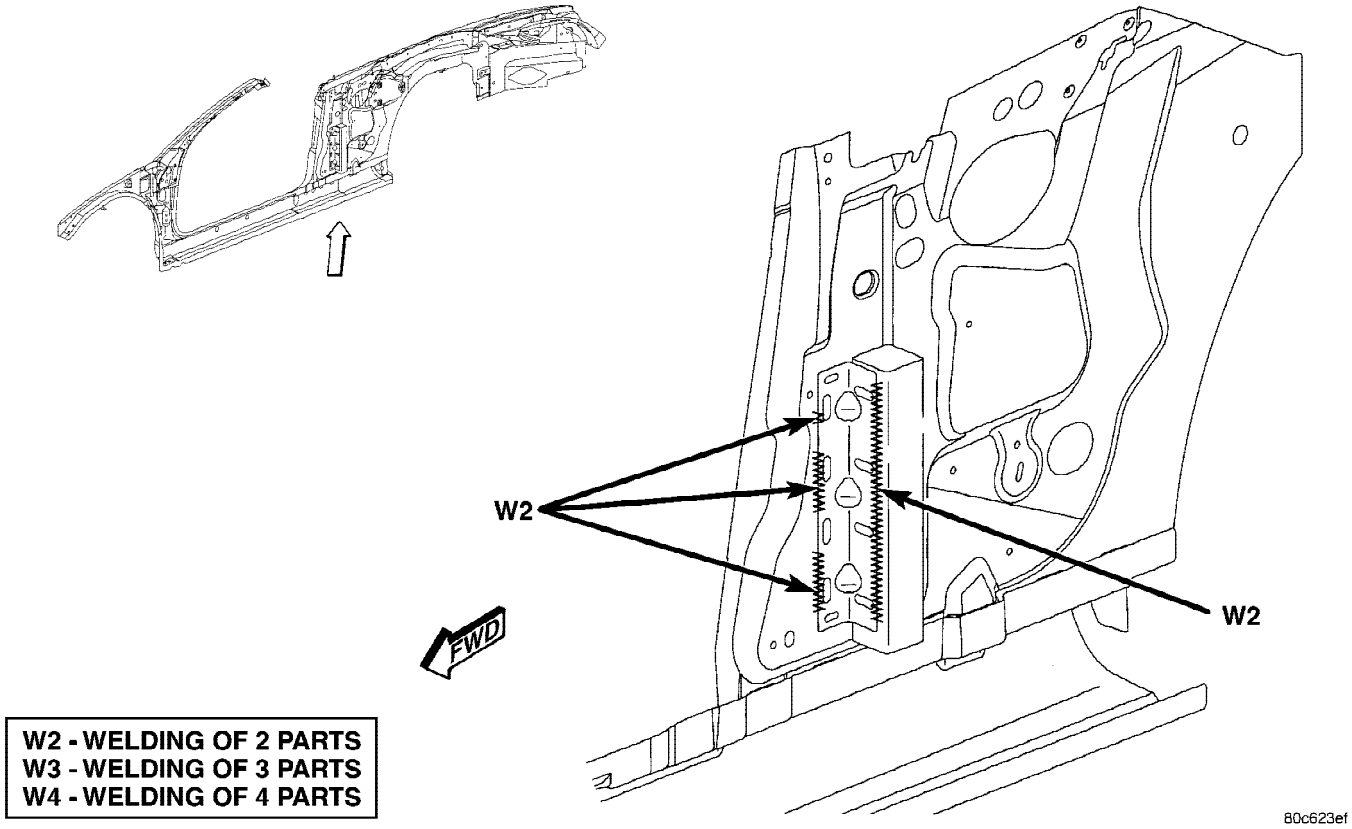

Fig. 176 REAR REINFORCEMENT BRACKET TO REAR SEAT FLOOR PAN REINFORCEMENT TO REAR INNER QUARTER PANEL

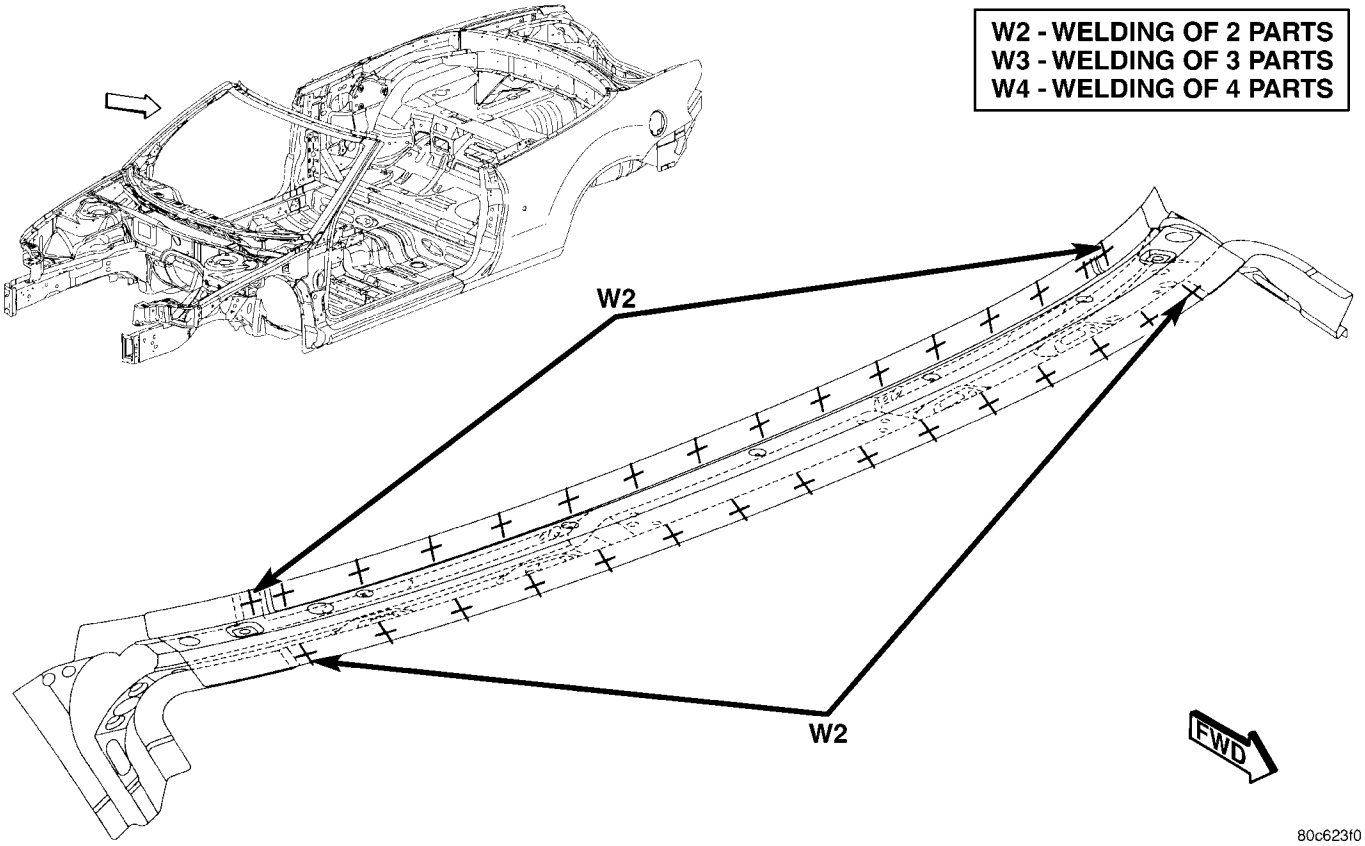

Fig. 177 LOWER WINDSHIELD HEADER TO UPPER WINDSHIELD HEADER

WELD LOCATIONS (Continued)

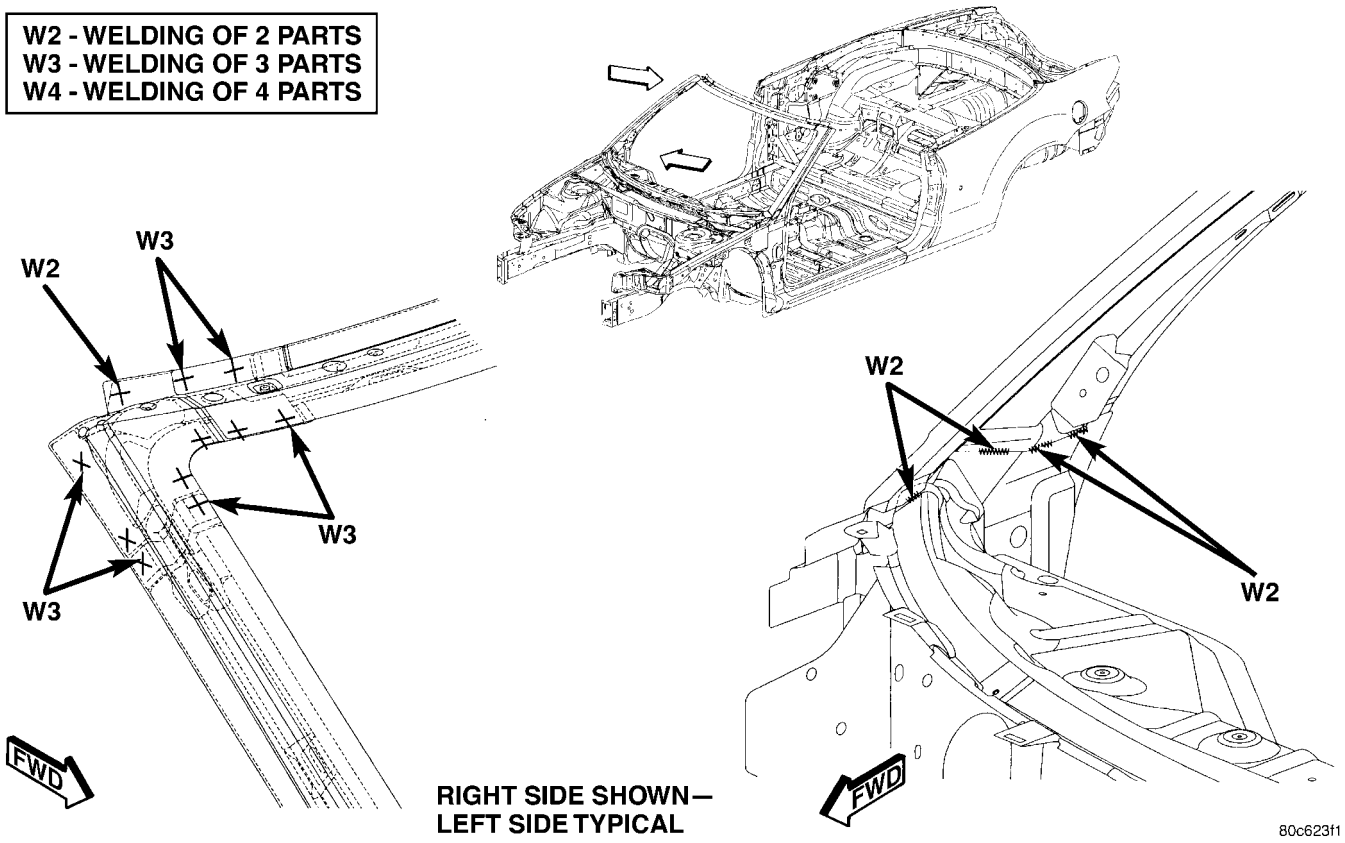

Fig. 178 OUTER WINDSHIELD SIDE FRAME TO INNER WINDSHIELD SIDE FRAME

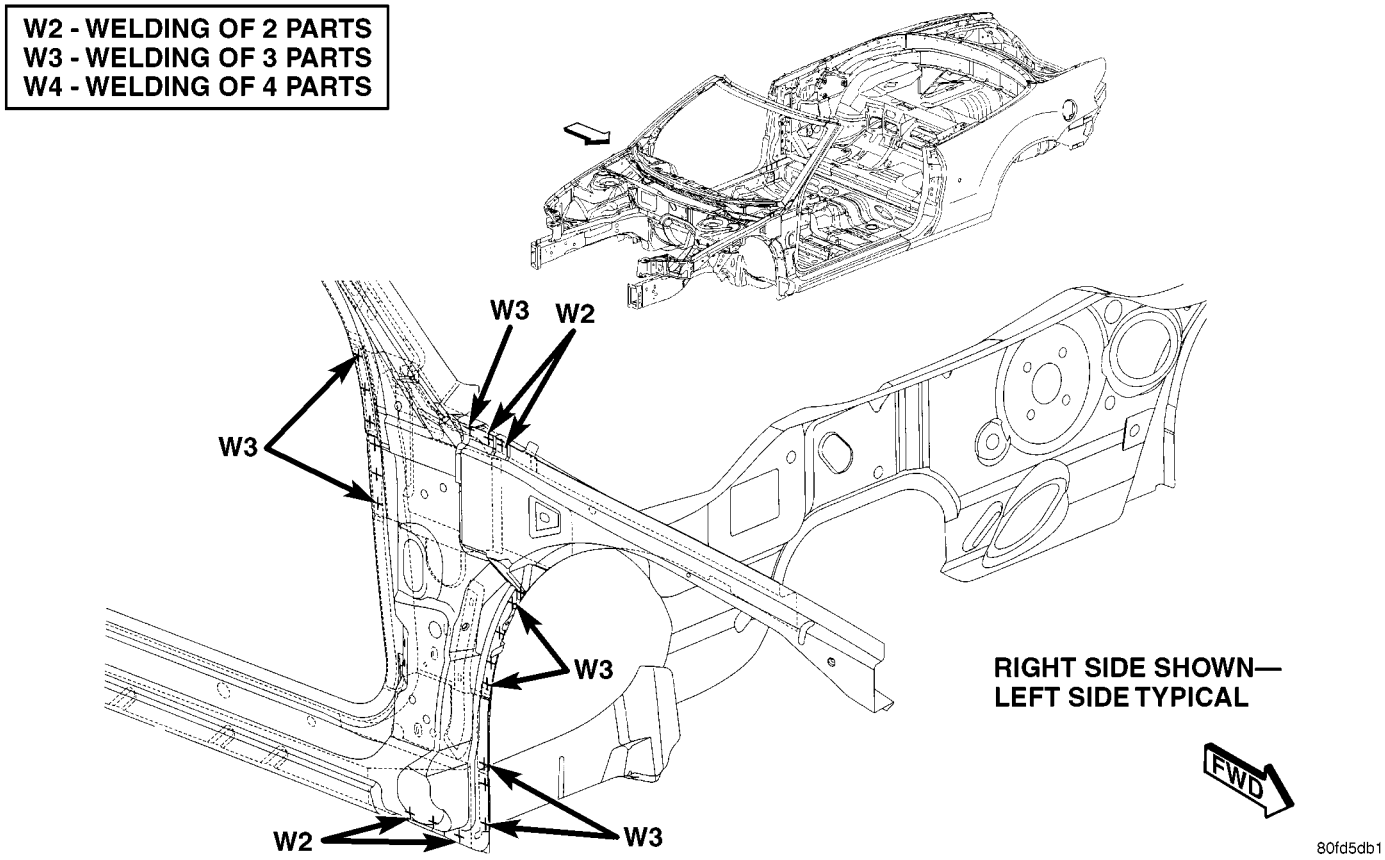

Fig. 179 INNER AND OUTER WINDSHIELD FRAME TO OUTER BODY SIDE PANEL TO INNER UPPER

WELD LOCATIONS (Continued)

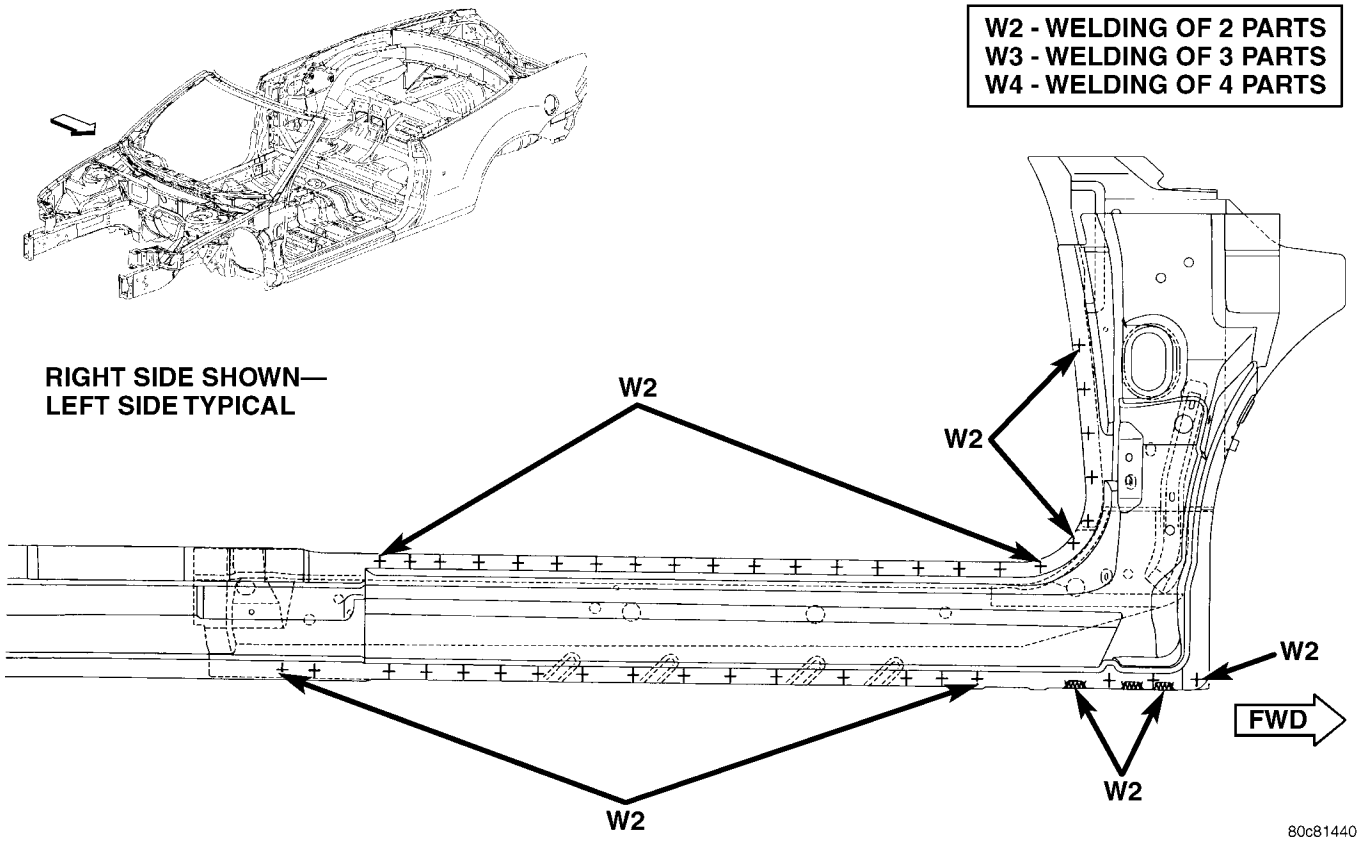

Fig. 180 INNER AND OUTER BODY SIDE SILL TO COWL SIDE PANEL

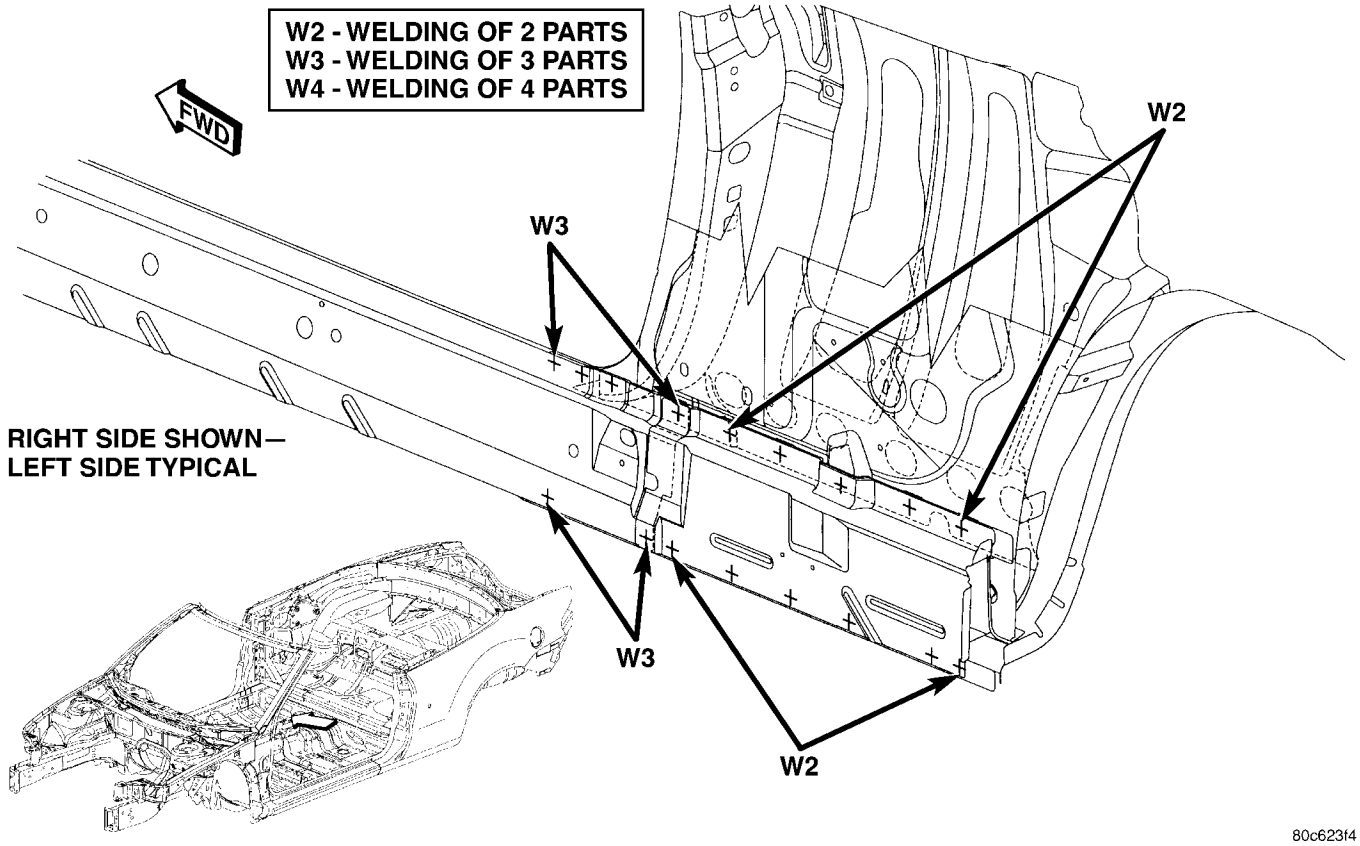

Fig. 181 INNER BODY SIDE SILL TO OUTER BODY SIDE PANEL TO INNER SIDE SILL EXTENSION

WELD LOCATIONS (Continued)

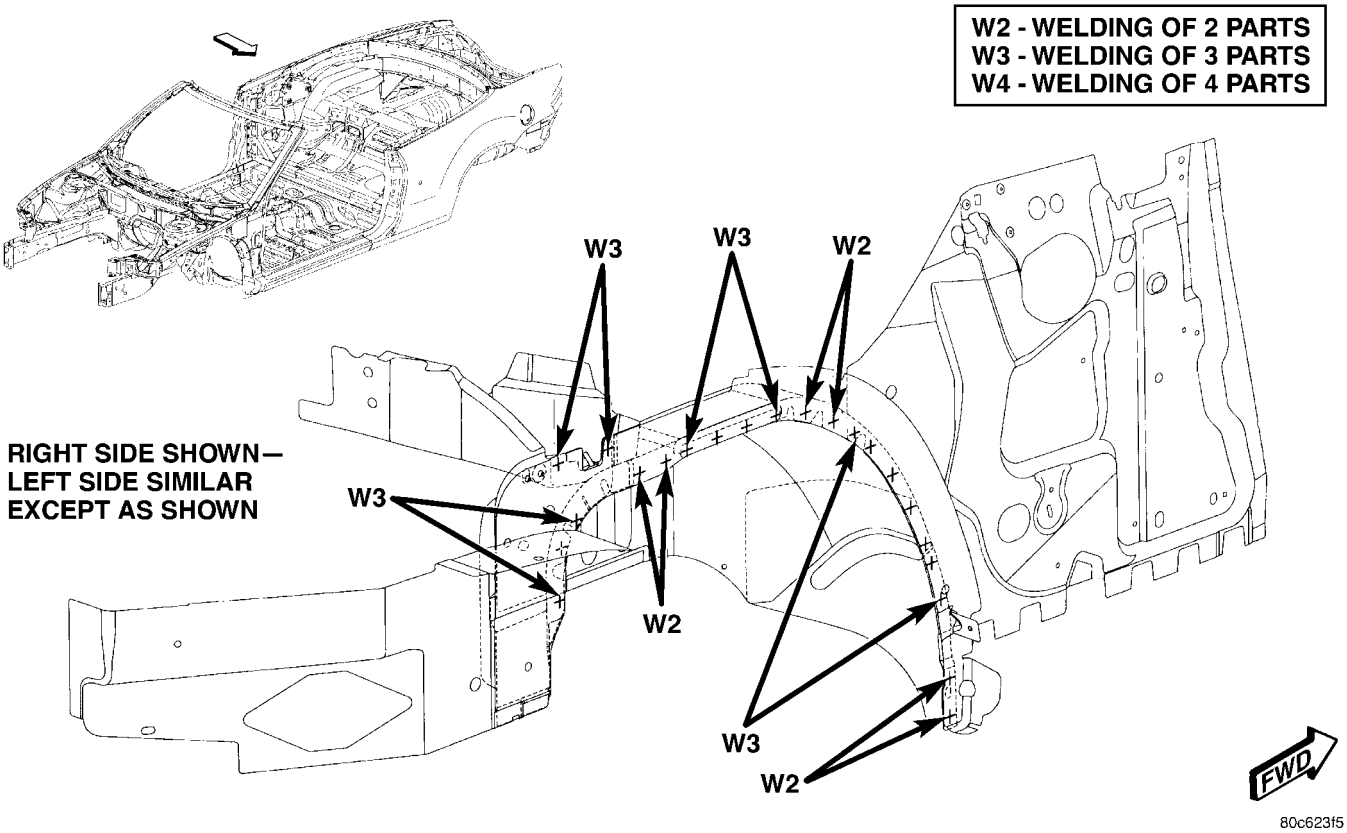

Fig. 182 INNER REAR WHEELHOUSE TO INNER QUARTER PANEL TO REAR INNER WHEELHOUSE QUARTER EXTENSION

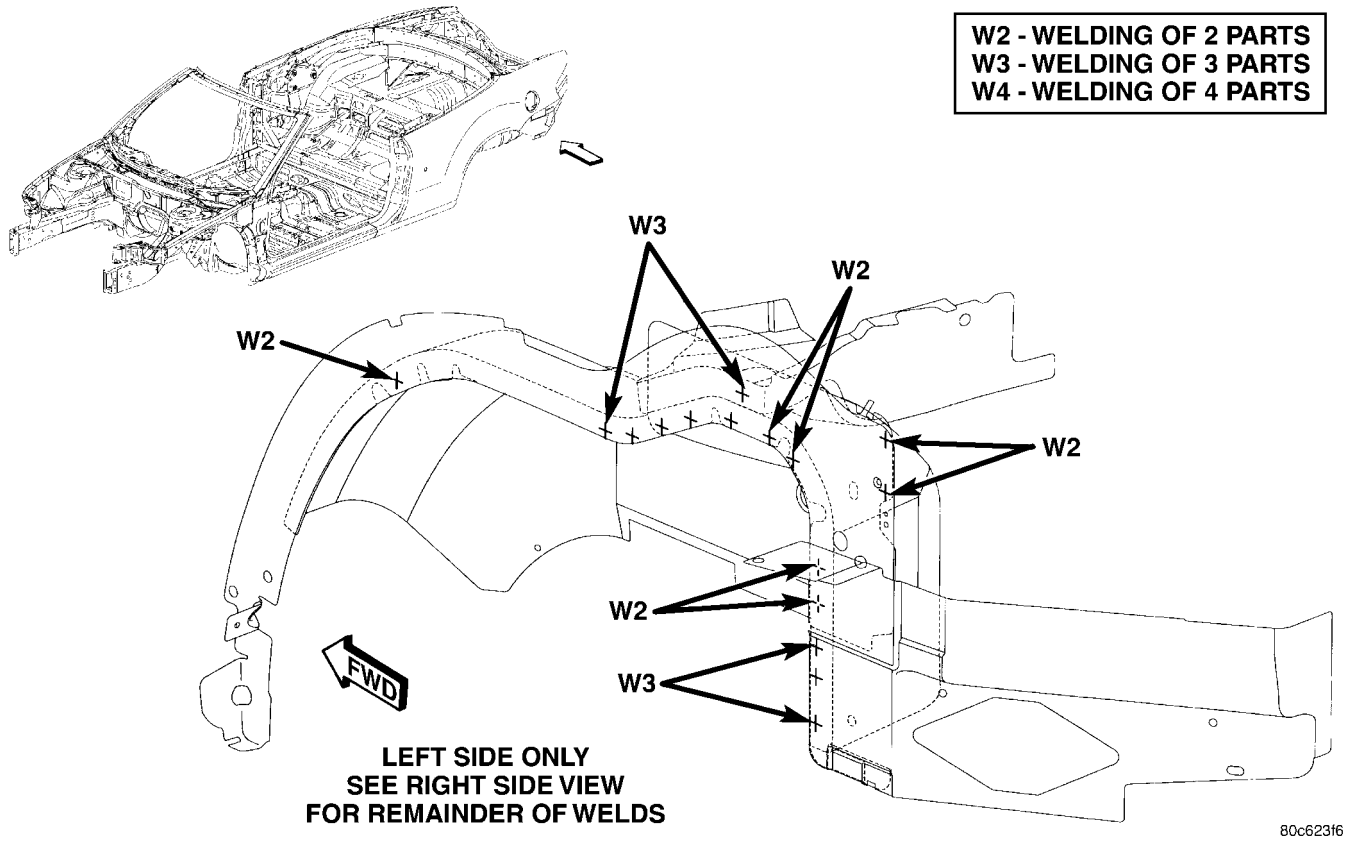

Fig. 183 LOWER OUTER QUARTER PANEL EXTENSION TO REAR INNER QUARTER PANEL TO REAR INNER WHEELHOUSE

WELD LOCATIONS (Continued)

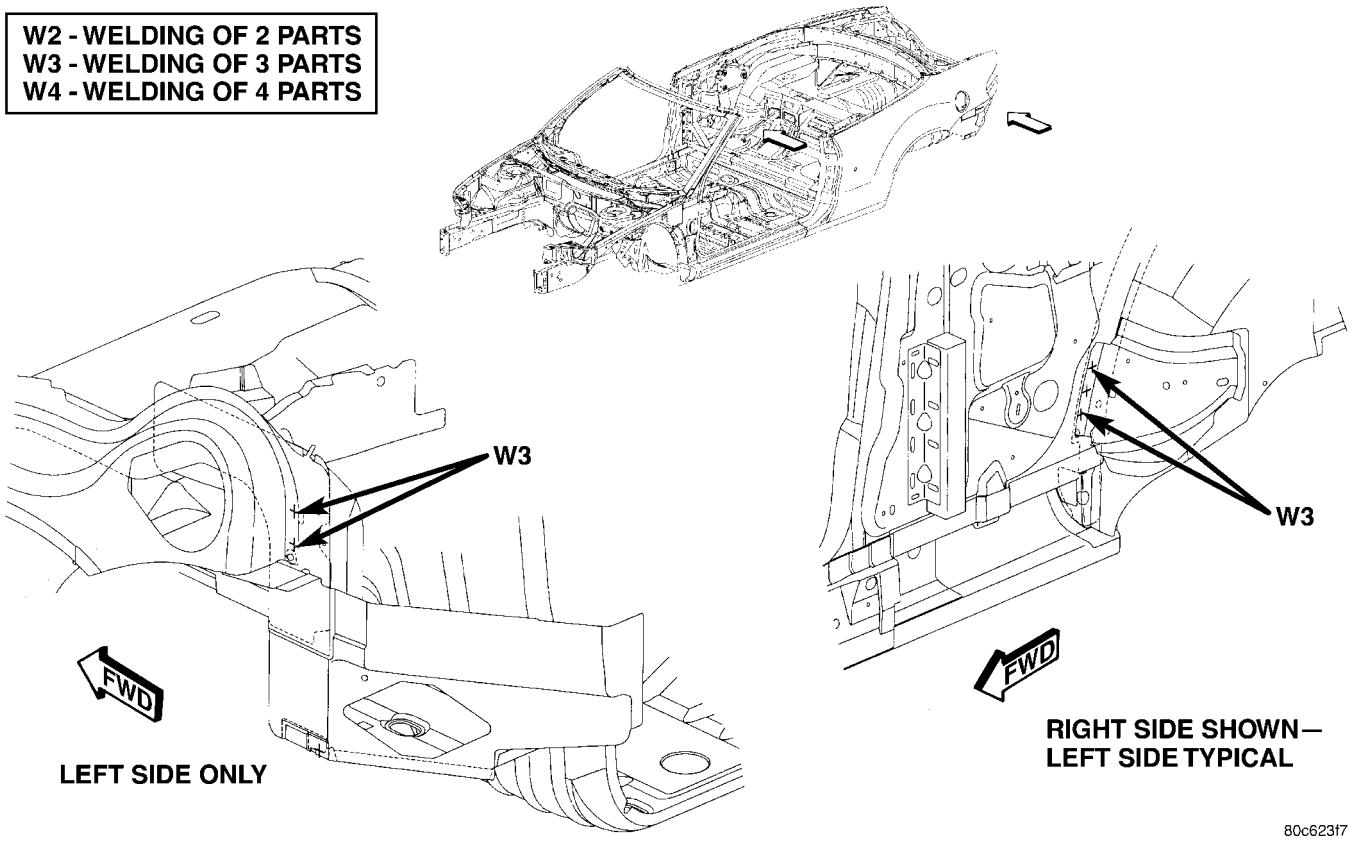

Fig. 184 REAR INNER QUARTER PANEL TO INNER WHEELHOUSE EXTENSION TO FRONT INNER QUARTER PANEL

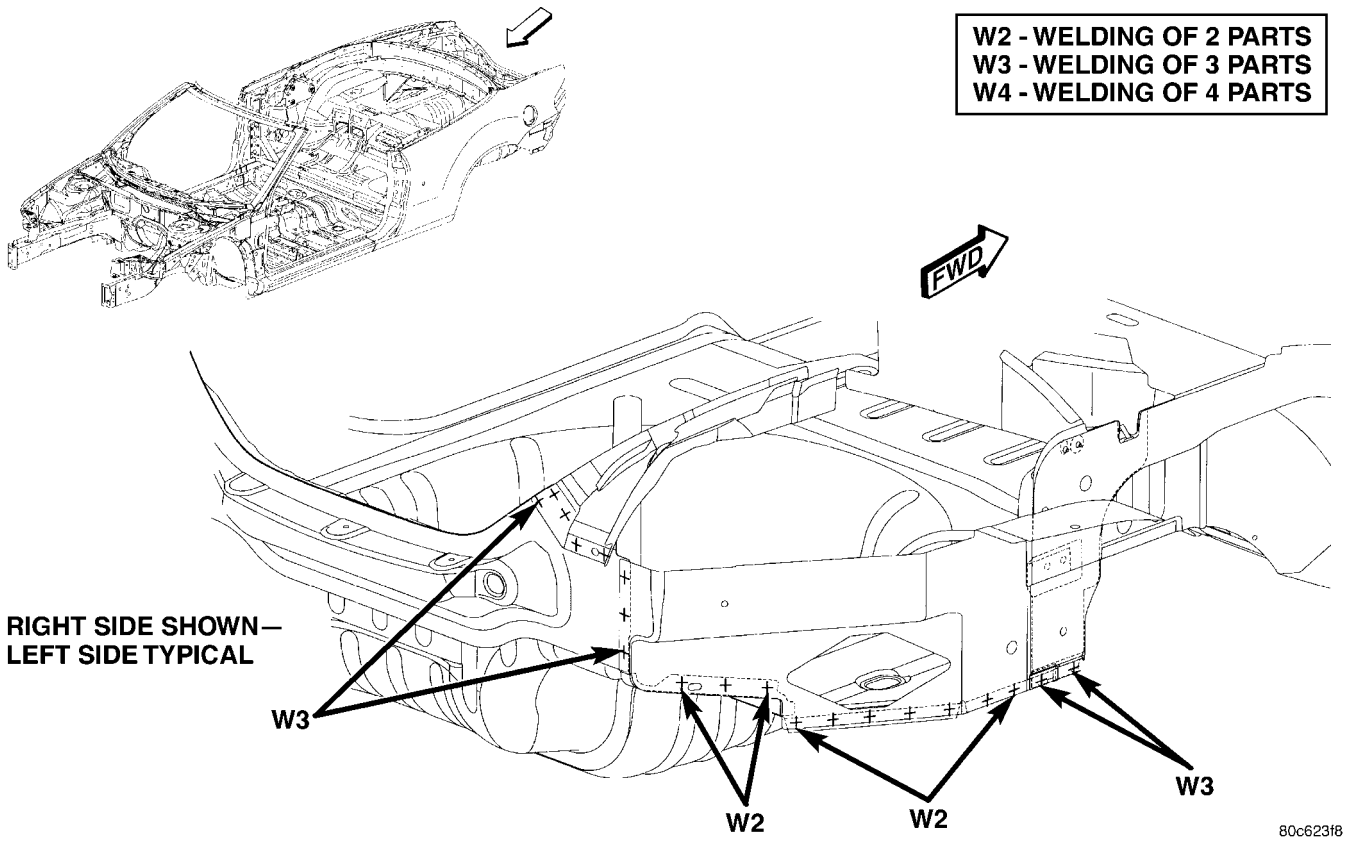

Fig. 185 LOWER REAR QUARTER PANEL EXTENSION TO REAR FLOOR PAN AND LOWER DECK PANEL

WELD LOCATIONS (Continued)

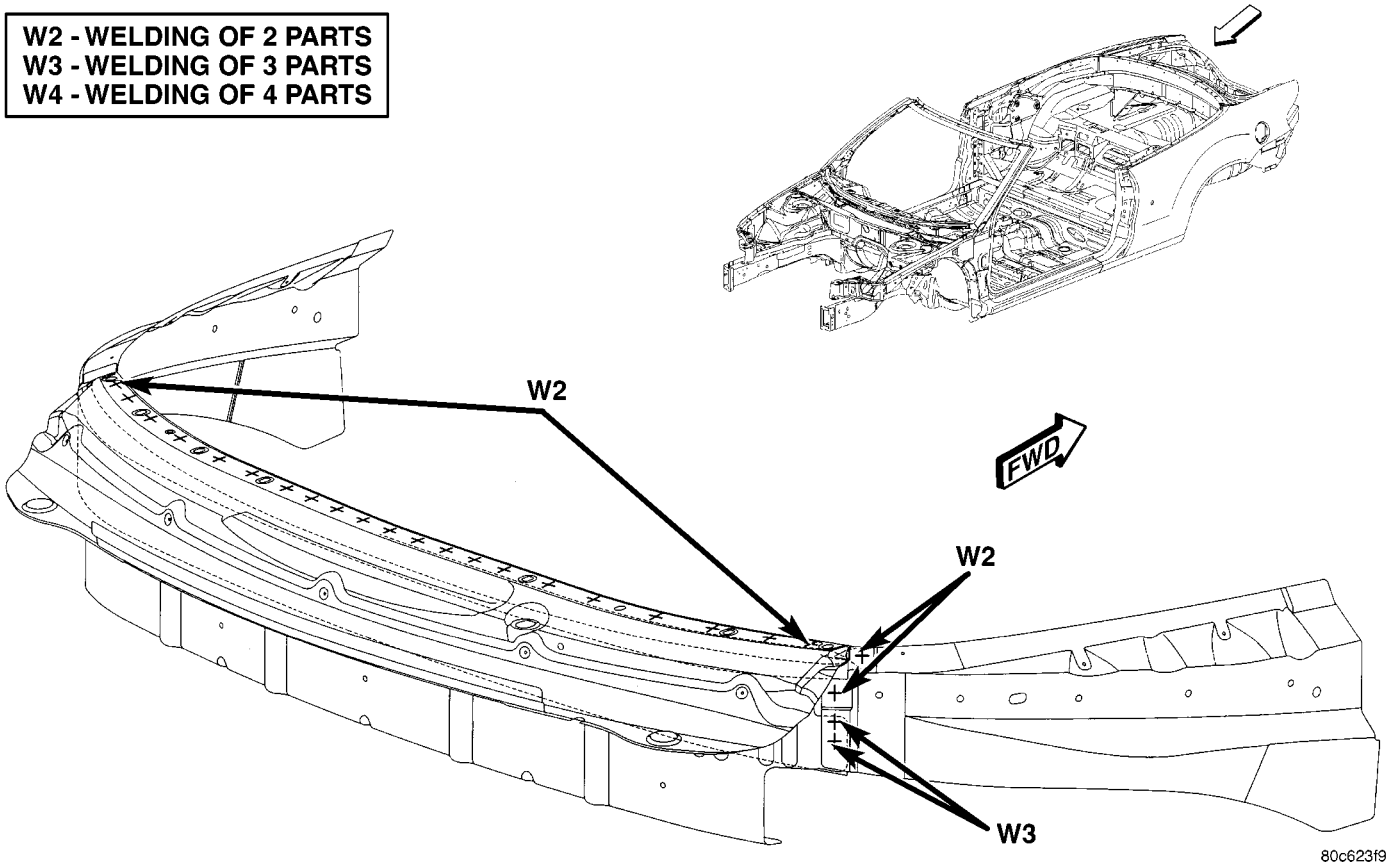

Fig. 186 FRONT UPPER DECK PANEL TROUGH TO UPPER DECK PANEL TROUGH

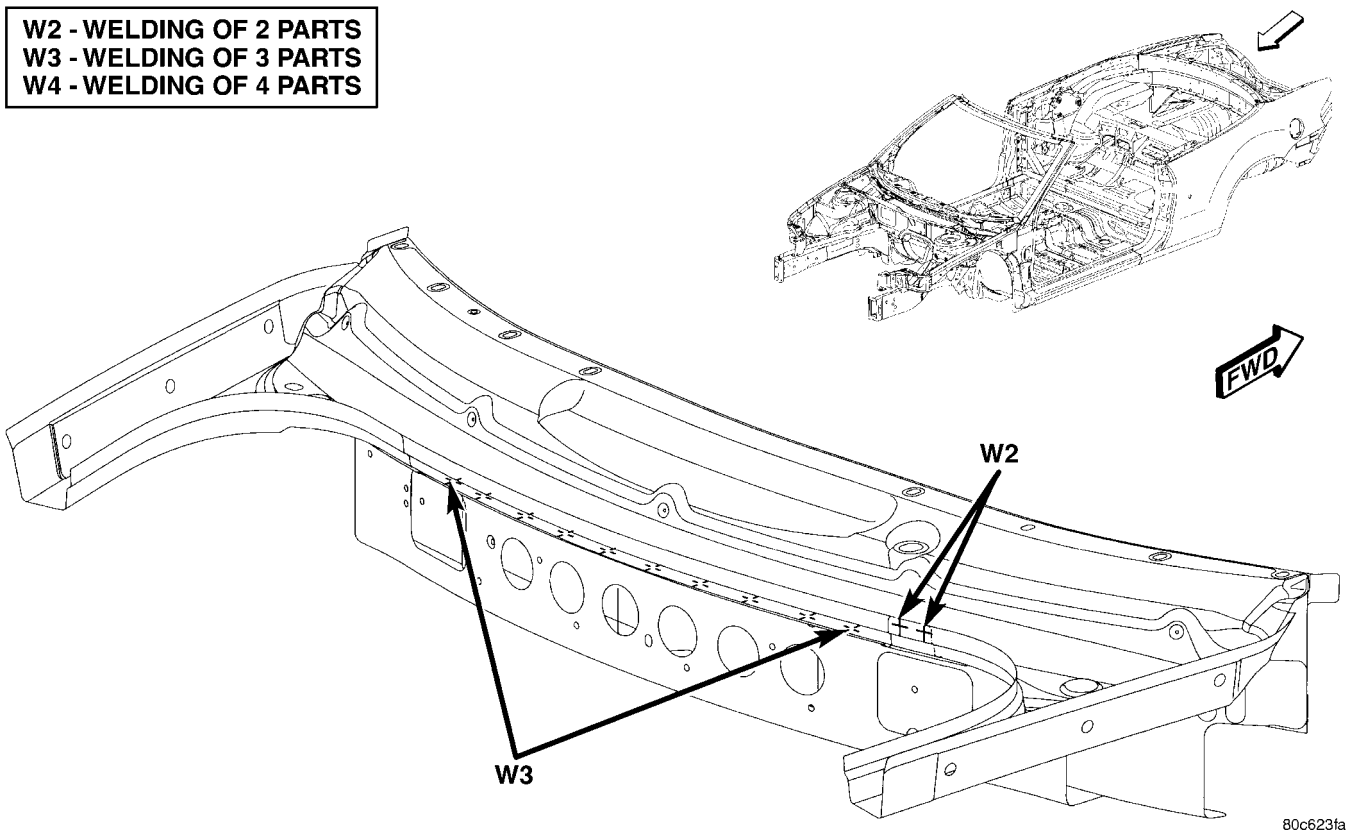

Fig. 187 UPPER DECK TROUGH PANEL TO UPPER DECK PANEL FRONT REINFORCEMENT TO DECK PANEL REAR REINFORCEMENT

WELD LOCATIONS (Continued)

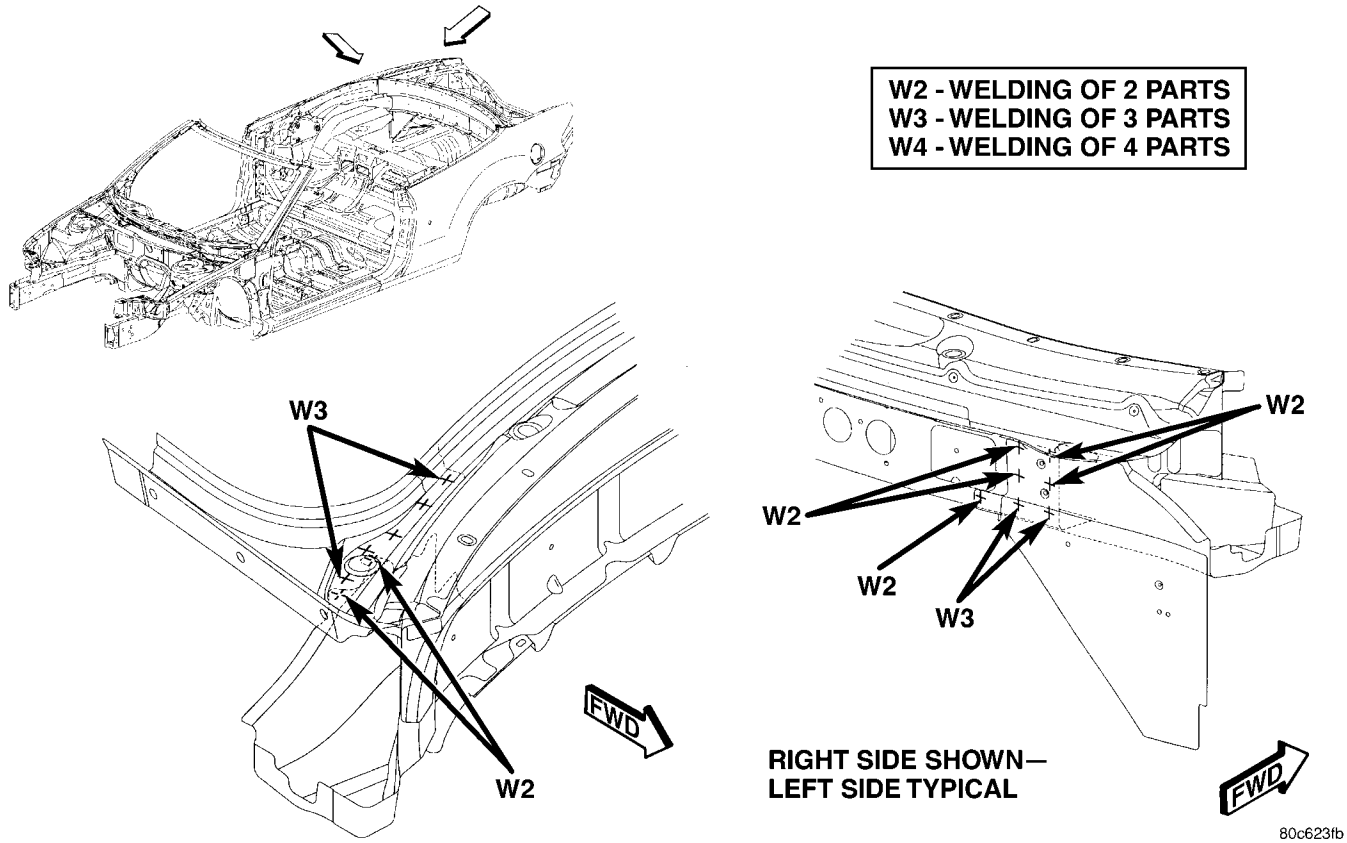

Fig. 188 WHEELHOUSE UPPER DECK REINFORCEMENT TO UPPER DECK REAR REINFORCEMENT AND UPPER FRONT REINFORCEMENT

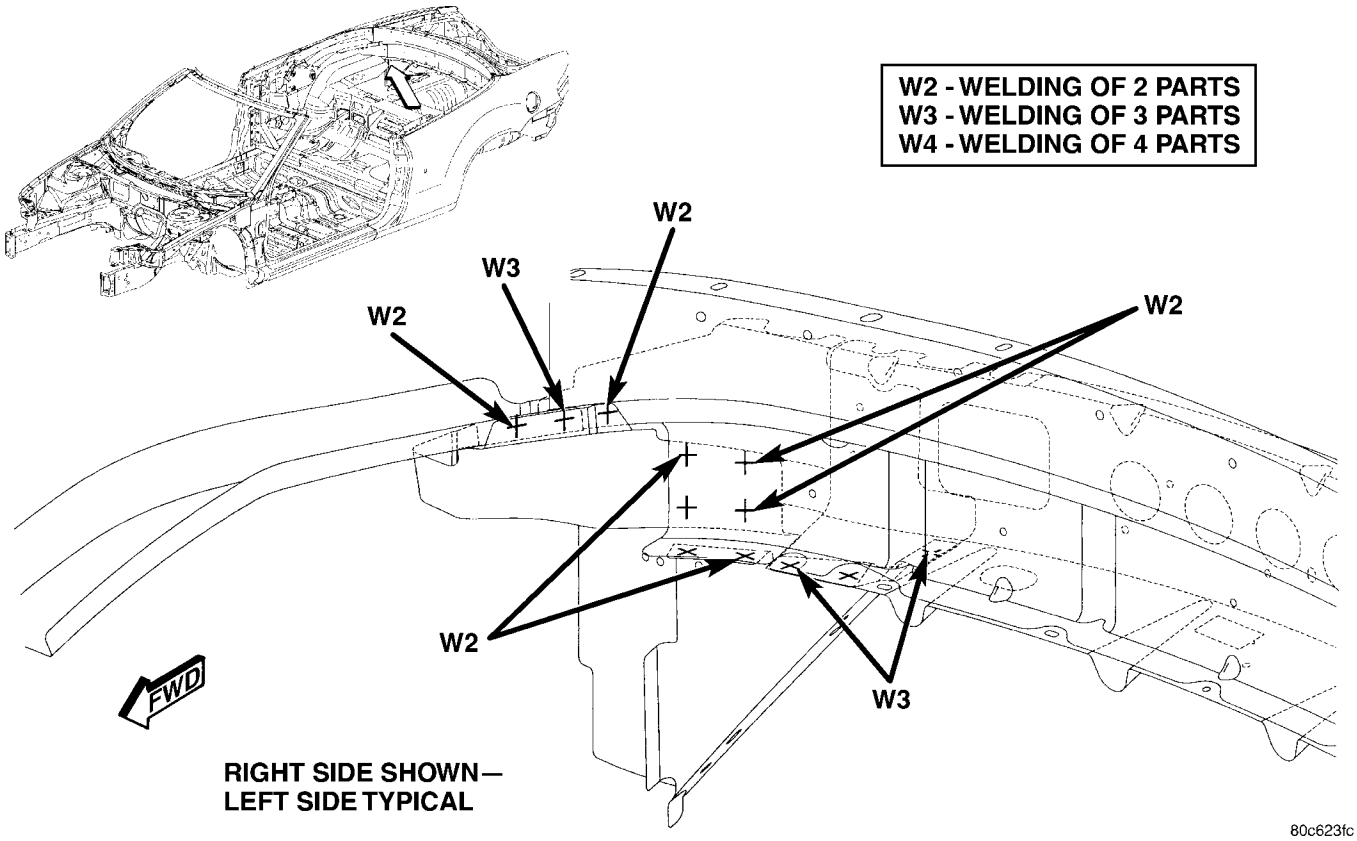

Fig. 189 UPPER DECK PANEL FRONT REINFORCEMENT TO WHEELHOUSE UPPER DECK REINFORCEMENT EXTENSION

WELD LOCATIONS (Continued)

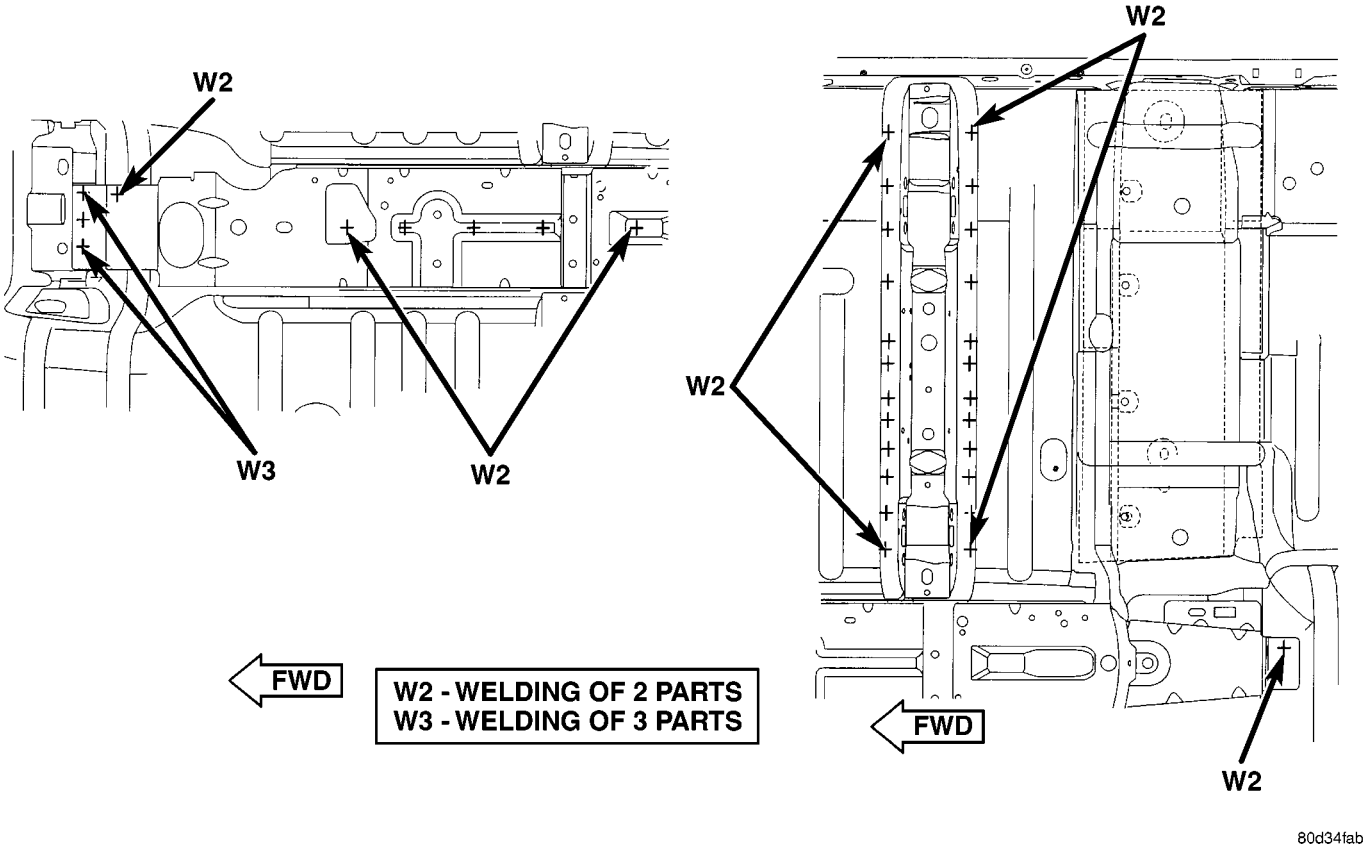

Fig. 190 FRONT CONSOLE BRACKET TO FRONT FLOOR PAN

WELD LOCATIONS (Continued)

SPECIFICATIONS - WELD LOCATIONS - JR-41 ONLY

INDEX

DESCRIPTION	FIGURE
REAR RAIL BUMPER REINFORCEMENT ATTACHING REINFORCEMENT TO CENTER FLOOR PAN SIDE RAIL	191
CENTER PILLAR REINFORCEMENT TO INNER CENTER PILLAR TO INNER SIDE ROOF RAIL TO INNER SIDE	192
TAPPING PLATES, RETAINER & REINFORCEMENT TO CENTER PILLAR REINFORCEMENT	193
OUTER WHEELHOUSE TO UPPER INNER QUARTER PANEL REINFORCEMENT	194
INNER WINDSHIELD FRAME TO OUTER WINDSHIELD FRAME TO HINGE PILLAR REINFORCEMENT	195
CENTER PILLAR REINFORCEMENT & SILL BEAM REINFORCEMENT TO BODY SIDE APERTURE	196
CENTER PILLAR REINFORCEMENT TO BODY SIDE APERTURE	197
CENTER PILLAR REINFORCEMENT TO CENTER ROOF SUPPORT TO BODY SIDE APERTURE	198
LOWER DECK OPENING REINFORCEMENT TO LOWER DECK OPENING PANEL	199
CHILD SEAT TETHERS ANCHOR & SHOULDER BELT REINFORCEMENT TO SHELF PANEL	200
INNER BODY SIDE SILL TO DASH PANEL TO COWL SIDE PANEL	201
INNER TO OUTER WINDSHIELD FRAME, OUTER LOAD BEAM & HINGE PILLAR REINFORCEMENT TO BODY SIDE APERTURE	202
CENTER PILLAR REINFORCEMENT TO INNER CENTER PILLAR TO BODY SIDE APERTURE	203
INNER CENTER PILLAR, WINDSHIELD FRAME & INNER ROOF RAIL TO BODY SIDE APERTURE	204
HINGE PILLAR REINFORCEMENT TO SILL BEAM TO SIDE SILL REINFORCEMENT	205
OUTER REAR WHEELHOUSE & SEAT BELT ANCHOR REINFORCEMENT TO BODY SIDE APERTURE	206
INNER QUARTER PANEL REINFORCEMENT TO INNER QUARTER PANEL TO BODY SIDE APERTURE	207
DRIP RAIL/ROOF SUPPORT TO BODY SIDE APERTURE	208
OUTER WINDSHIELD FRAME TO INNER WINDSHIELD FRAME TO COWL SIDE PANEL	209
OUTER REAR WHEELHOUSE & REAR SILL TO BODY SIDE APERTURE ROOF BOWS TO CENTER PILLAR REINFORCEMENT	210
REAR INNER WHEELHOUSE TO REAR OUTER WHEELHOUSE	211
INNER BODY SILL TO HINGE PILLAR REINFORCEMENT TO SILL BEAM TO BODY SIDE APERTURE	212
INNER SILL EXTENSION TO SIDE SILL REINFORCEMENT TO BODY SIDE APERTURE & INNER REAR WHEELHOUSE	213
REAR SHELF SUPPORT TO WHEELHOUSE TO REAR OUTER WHEELHOUSE	214
UPPER OUTER LOAD BEAM TO UPPER INNER LOAD BEAM TO BODY SIDE APERTURE	215
INNER BODY SIDE SILL TO COWL SIDE PANEL TO BODY SIDE APERTURE TO DASH PANEL	216

WELD LOCATIONS (Continued)

DESCRIPTION	FIGURE
REAR SHELF PANEL SUPPORTS TO WHEELHOUSE TO SHELF PANEL REINFORCEMENT	217
LOWER DECK OPENING PANEL TO QUARTER EXTENSION TO REAR FLOOR PAN	218
REAR FLOOR PAN SIDE RAIL TO LOWER DECK OPENING PANEL/REAR WHEELHOUSE TO QUARTER EXTENSION TO REAR FLOOR PAN	219
INNER WINDSHIELD FRAME TO WINDSHIELD FRAME & REAR WINDOW FRAME TO UPPER INNER QUARTER PANEL TO OUTER ROOF PANEL	220
REAR BUMPER ATTACHING REINFORCEMENT TO REAR RAIL BUMPER ATTACHING BRACKET	221
REAR SHELF PANEL SUPPORT TO REINFORCEMENT TO INNER REAR WHEELHOUSE TO REAR SHOCK MOUNTING BRACKET	222
INNER UPPER QUARTER PANEL TO REINFORCEMENT TO OUTER REAR WHEELHOUSE TO BODY SIDE APERTURE	223
INNER UPPER QUARTER PANEL REINFORCEMENT TO BODY SIDE APERTURE TO OUTER QUARTER PANEL	224
FRONT CONSOLE BRACKET TO FRONT FLOOR PAN	225

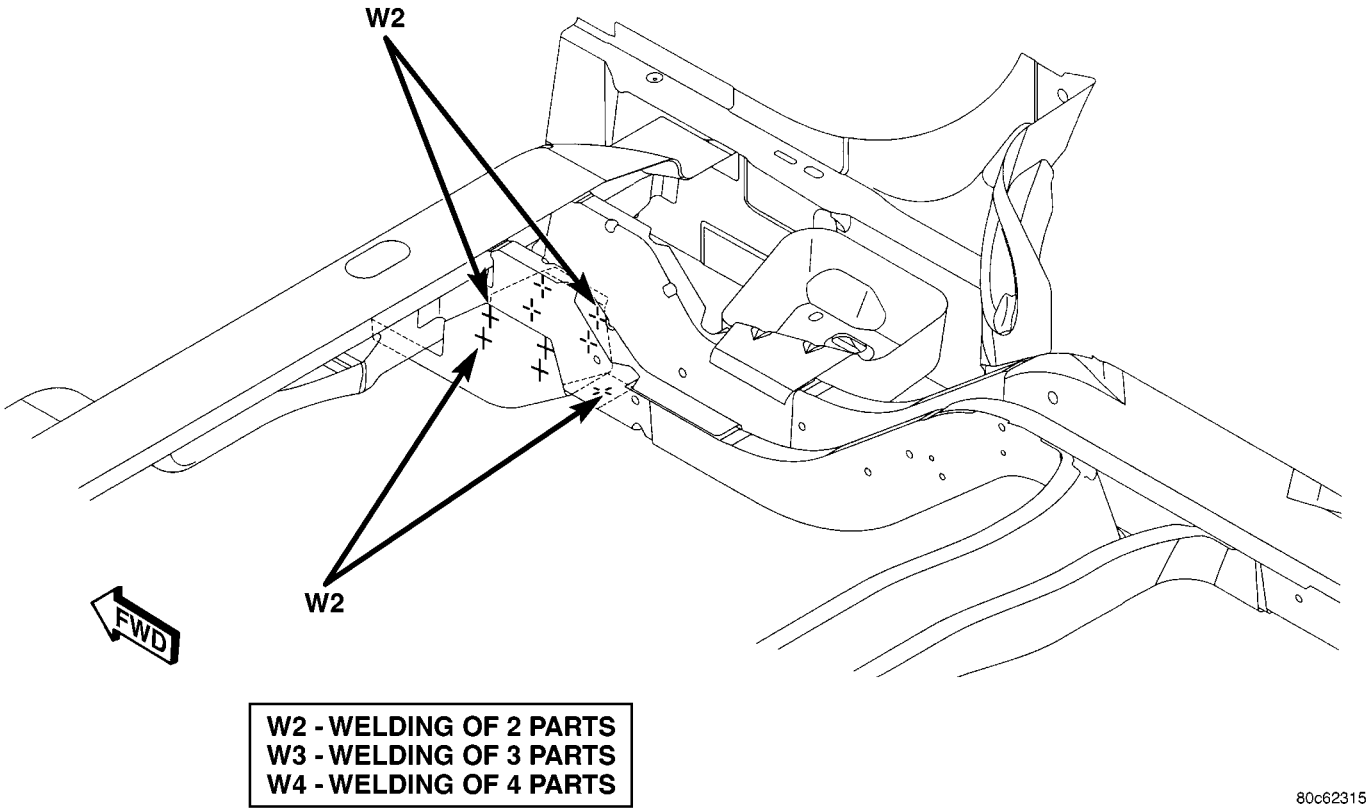

Fig. 191 REAR RAIL BUMPER REINFORCEMENT ATTACHING REINFORCEMENT TO CENTER FLOOR PAN SIDE RAIL

WELD LOCATIONS (Continued)

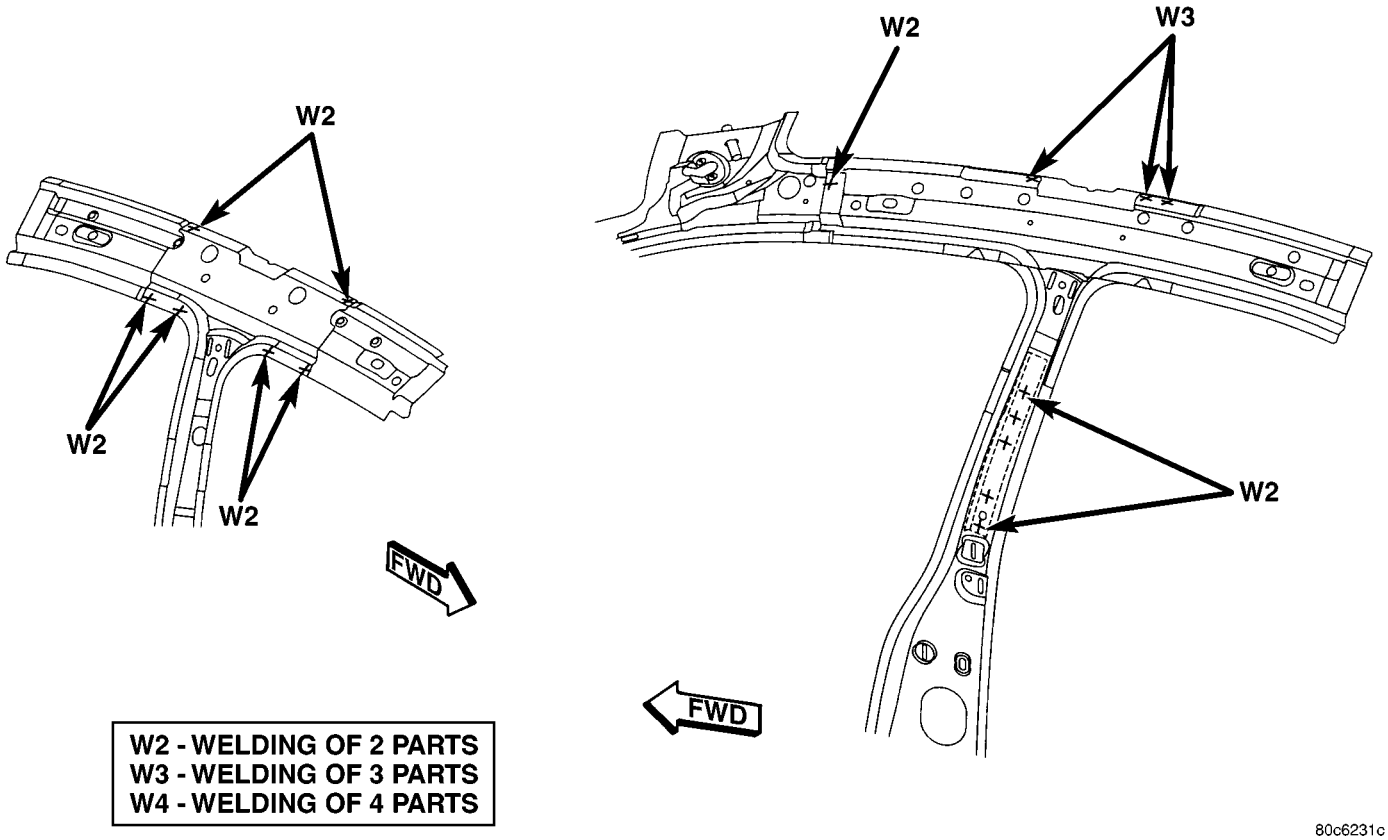

Fig. 192 CENTER PILLAR REINFORCEMENT TO INNER CENTER PILLAR TO INNER SIDE ROOF RAIL TO INNER SIDE

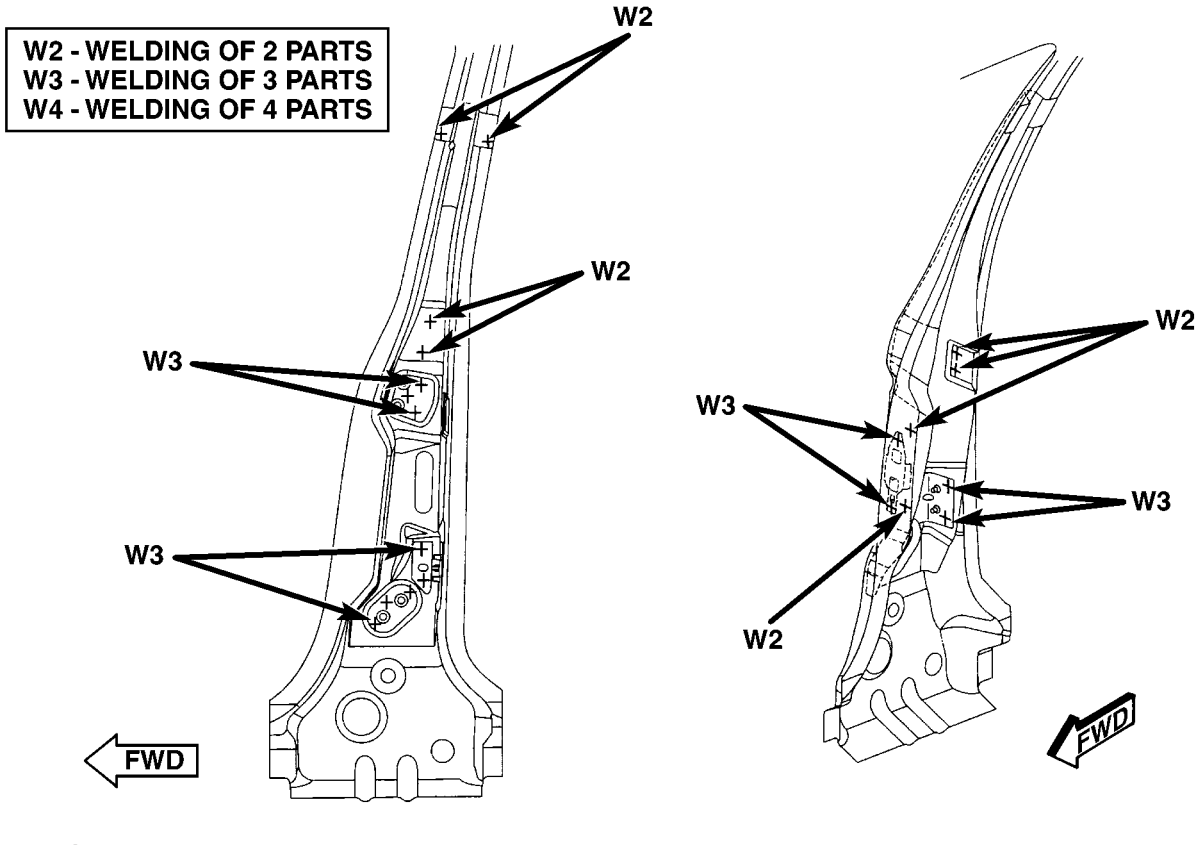

Fig. 193 TAPPING PLATES, RETAINER & REINFORCEMENT TO CENTER PILLAR REINFORCEMENT

WELD LOCATIONS (Continued)

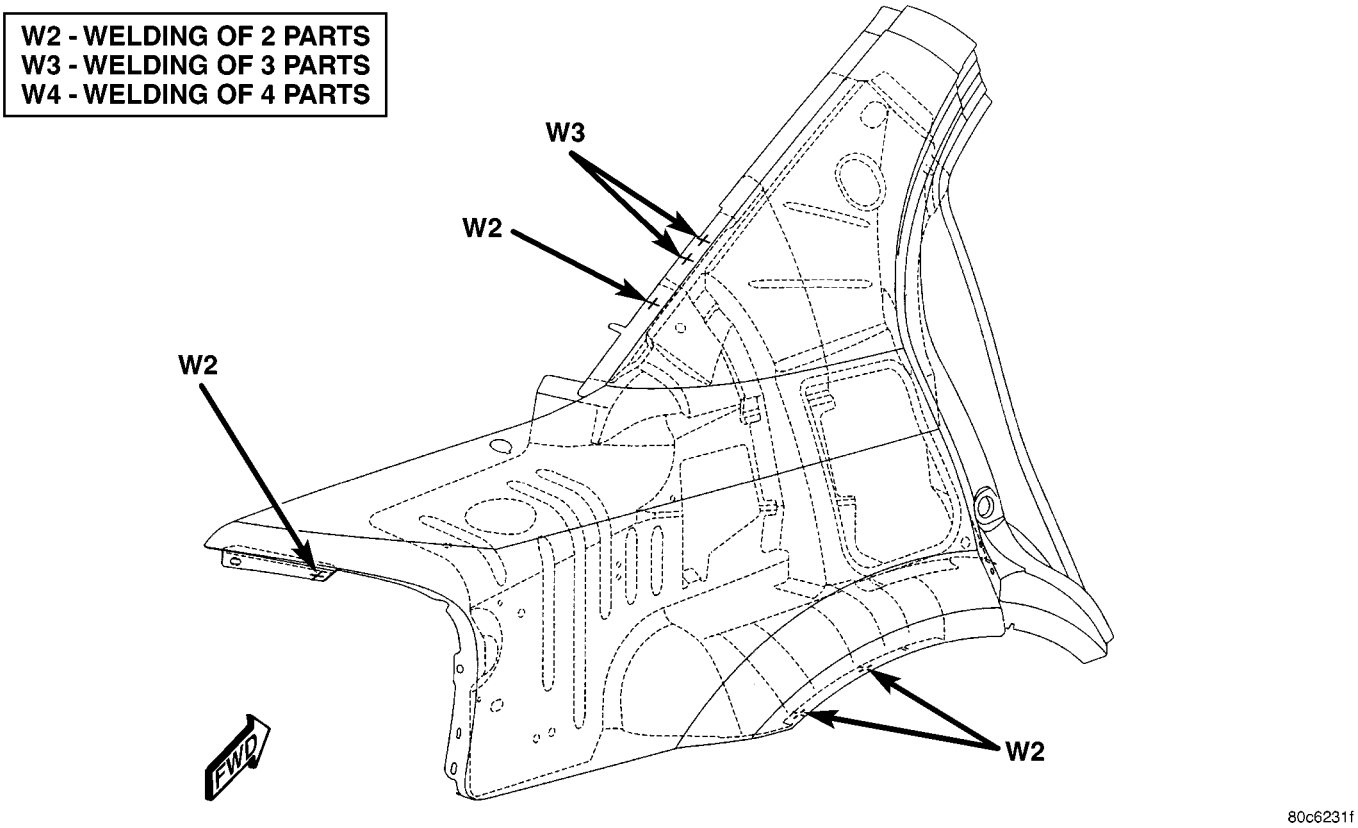

Fig. 194 OUTER WHEELHOUSE TO UPPER INNER QUARTER PANEL REINFORCEMENT

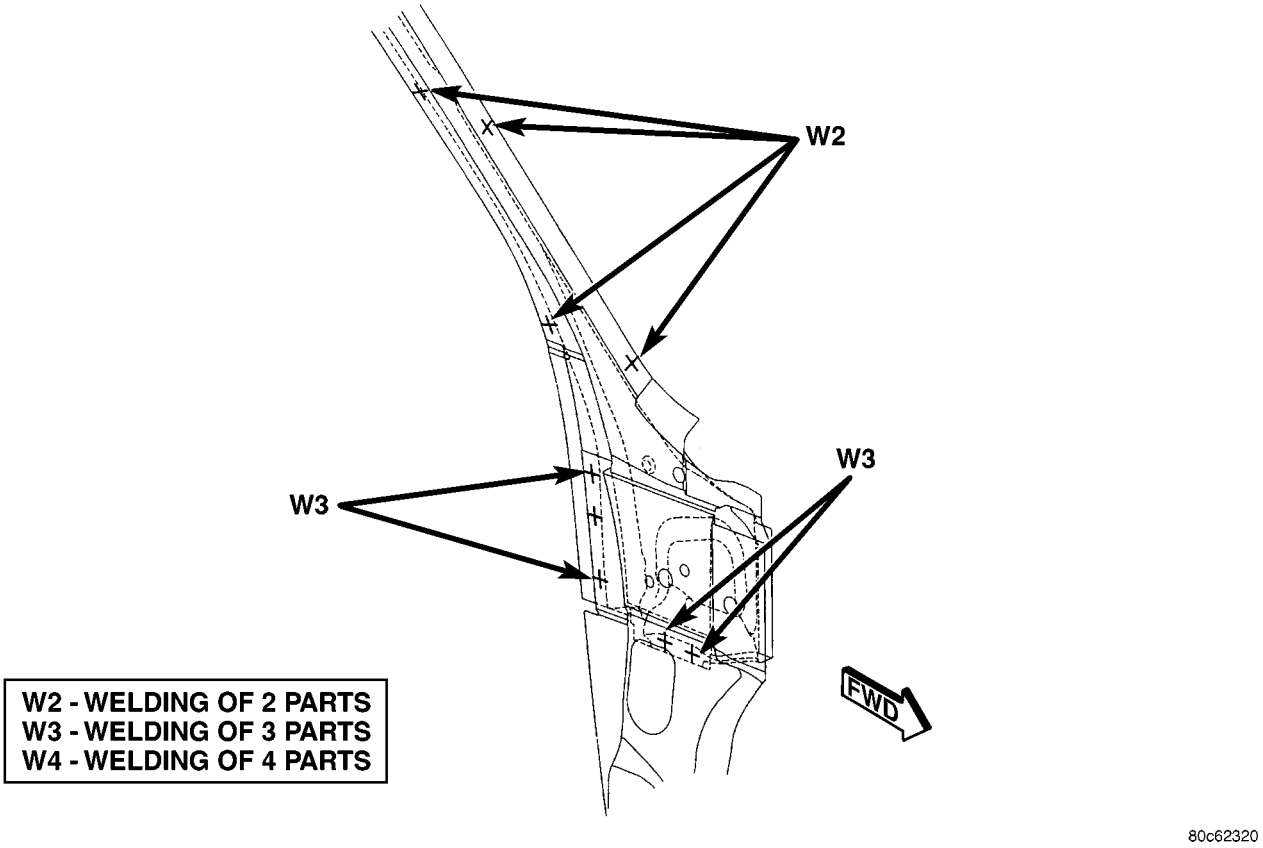

Fig. 195 INNER WINDSHIELD FRAME TO OUTER WINDSHIELD FRAME TO HINGE PILLAR REINFORCEMENT

WELD LOCATIONS (Continued)

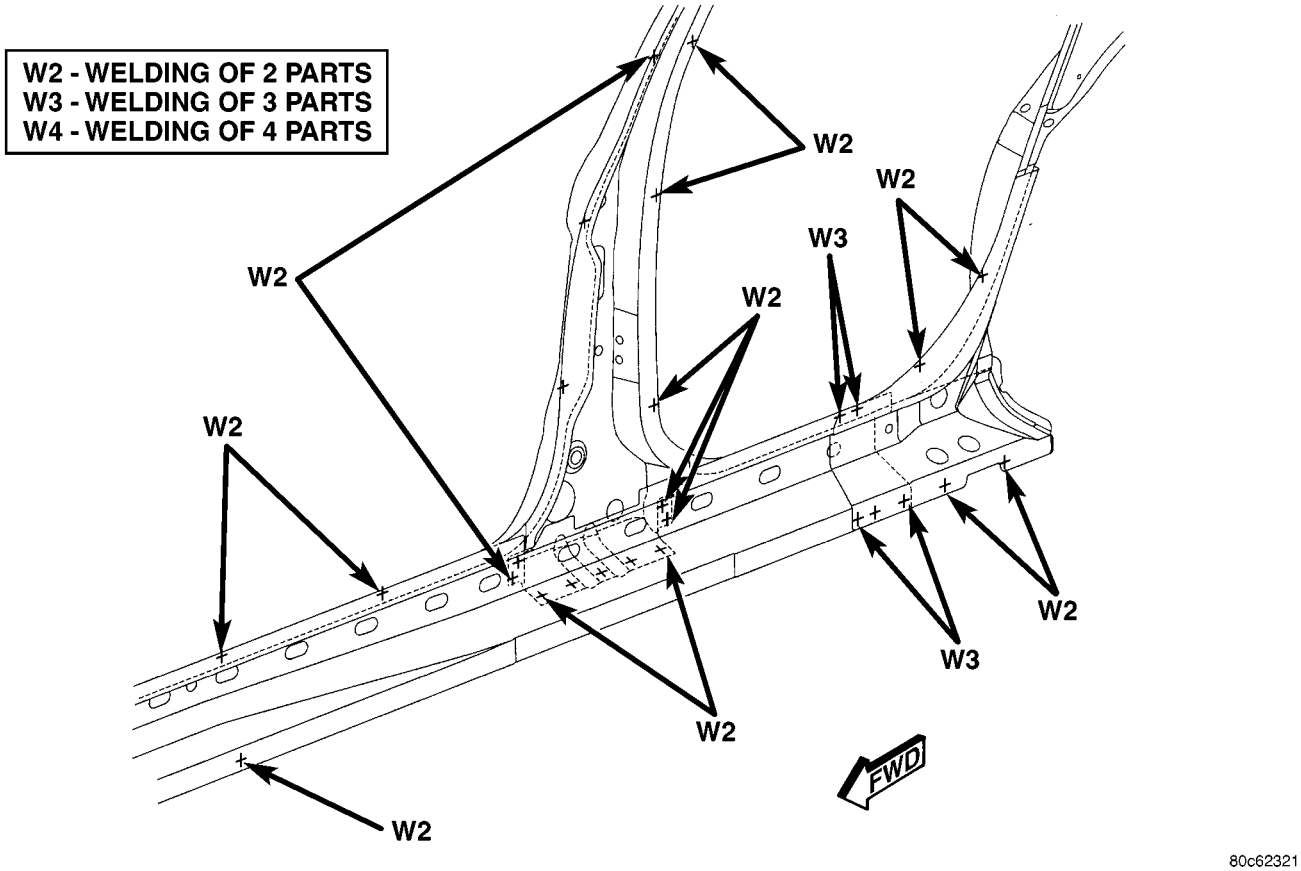

Fig. 196 CENTER PILLAR REINFORCEMENT & SILL BEAM REINFORCEMENT TO BODY SIDE APERTURE

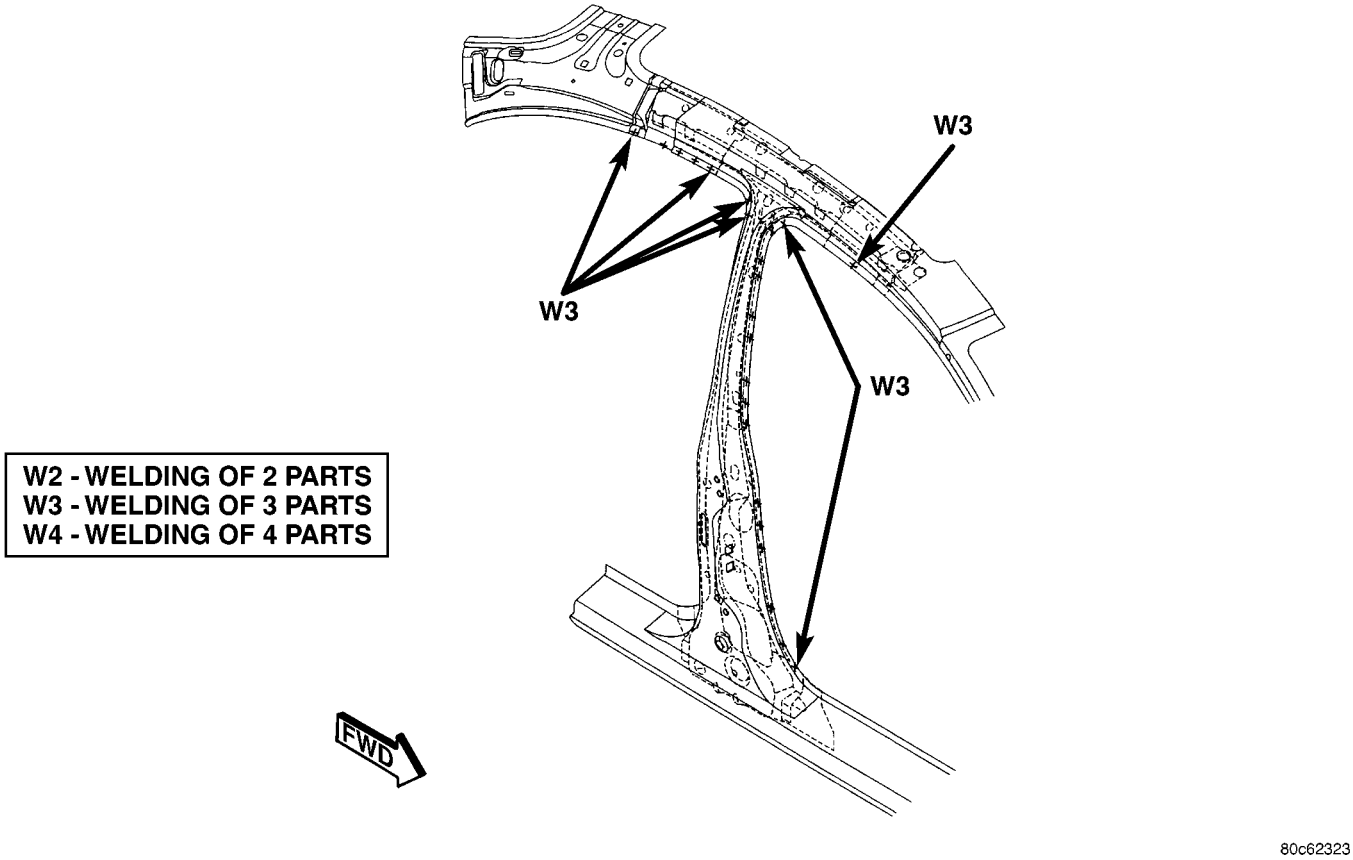

Fig. 197 CENTER PILLAR REINFORCEMENT TO BODY SIDE APERTURE

WELD LOCATIONS (Continued)

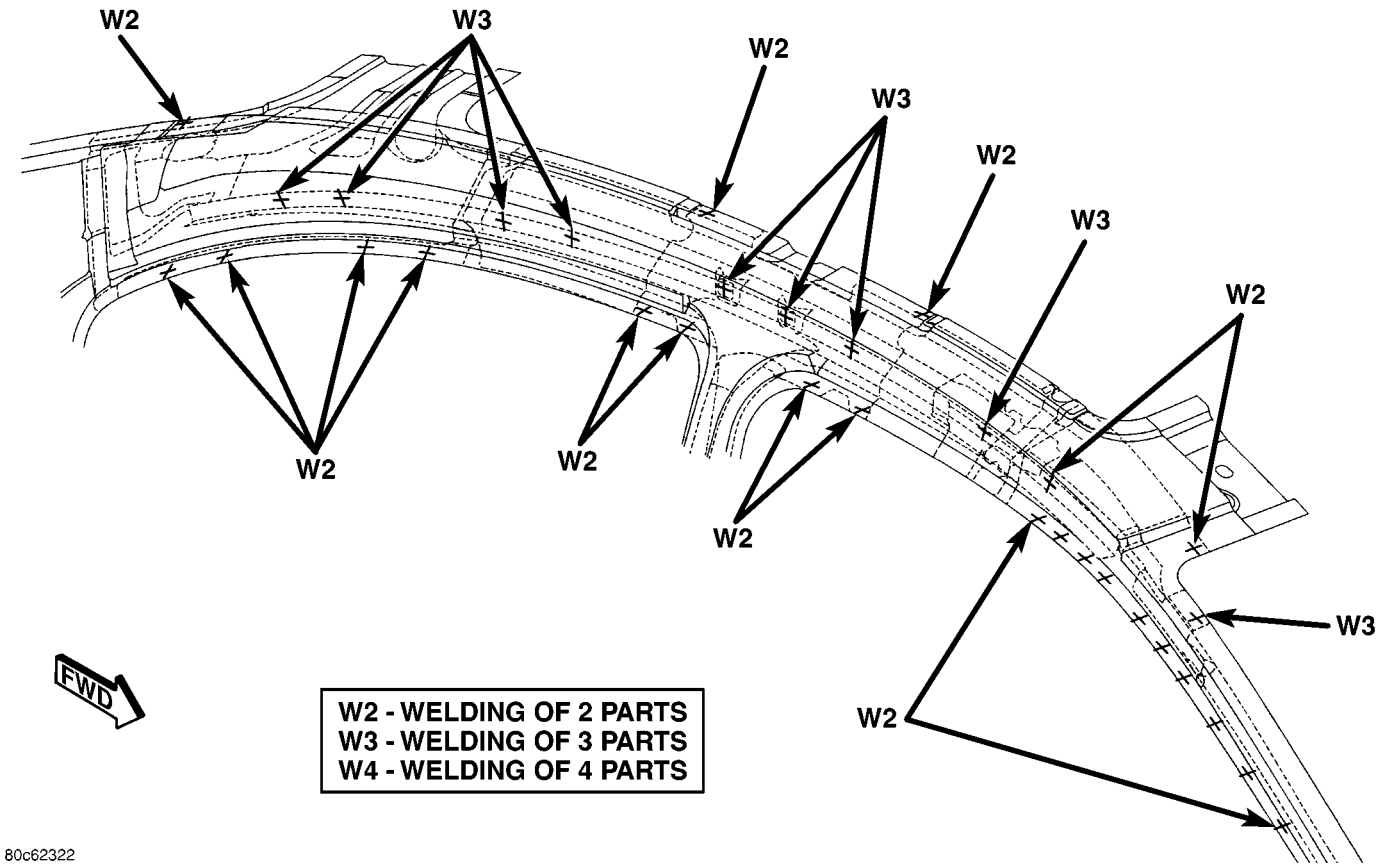

Fig. 198 CENTER PILLAR REINFORCEMENT TO CENTER ROOF SUPPORT TO BODY SIDE APERTURE

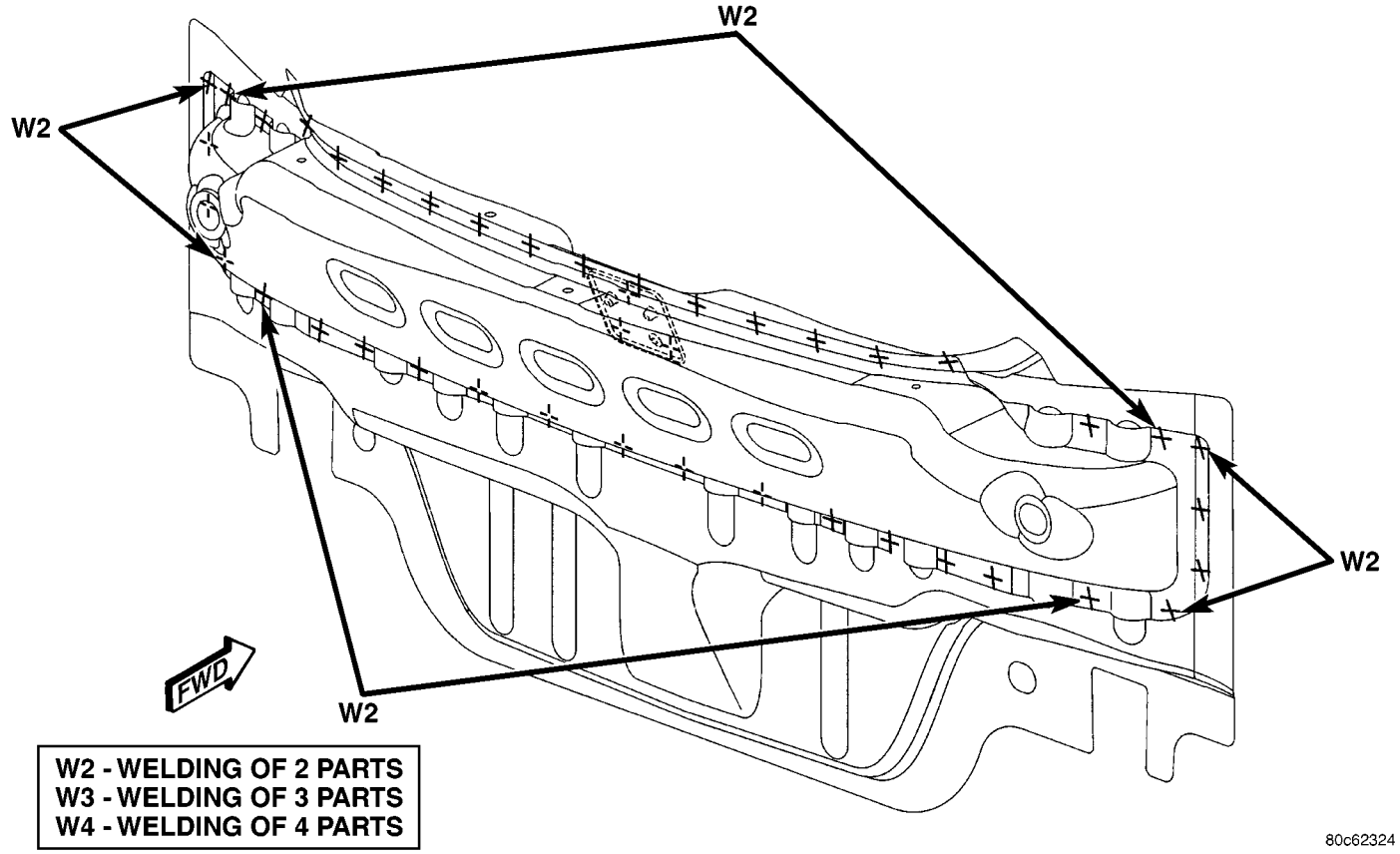

Fig. 199 LOWER DECK OPENING REINFORCEMENT TO LOWER DECK OPENING PANEL

WELD LOCATIONS (Continued)

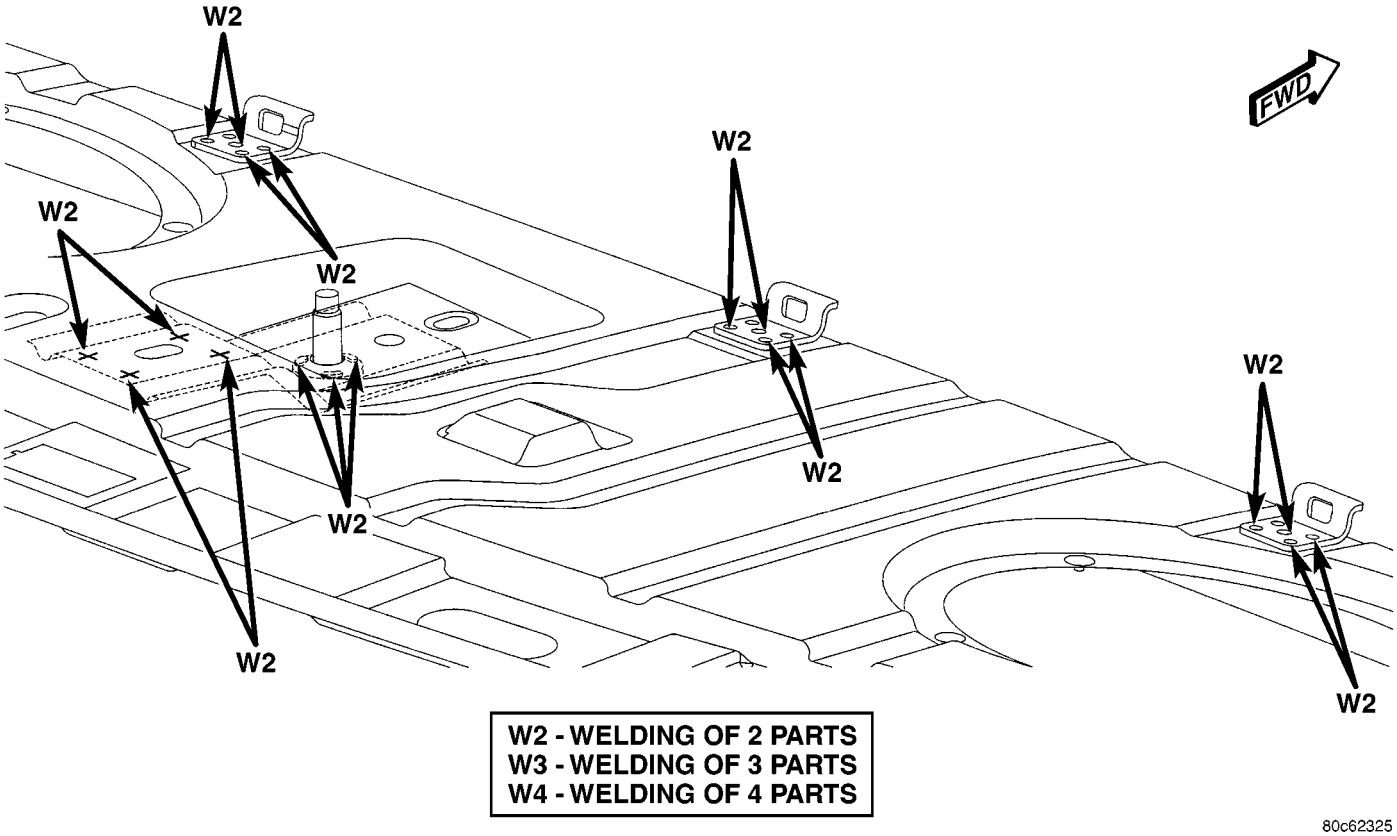

Fig. 200 CHILD SEAT TETHERS ANCHOR & SHOULDER BELT REINFORCEMENT TO SHELF PANEL

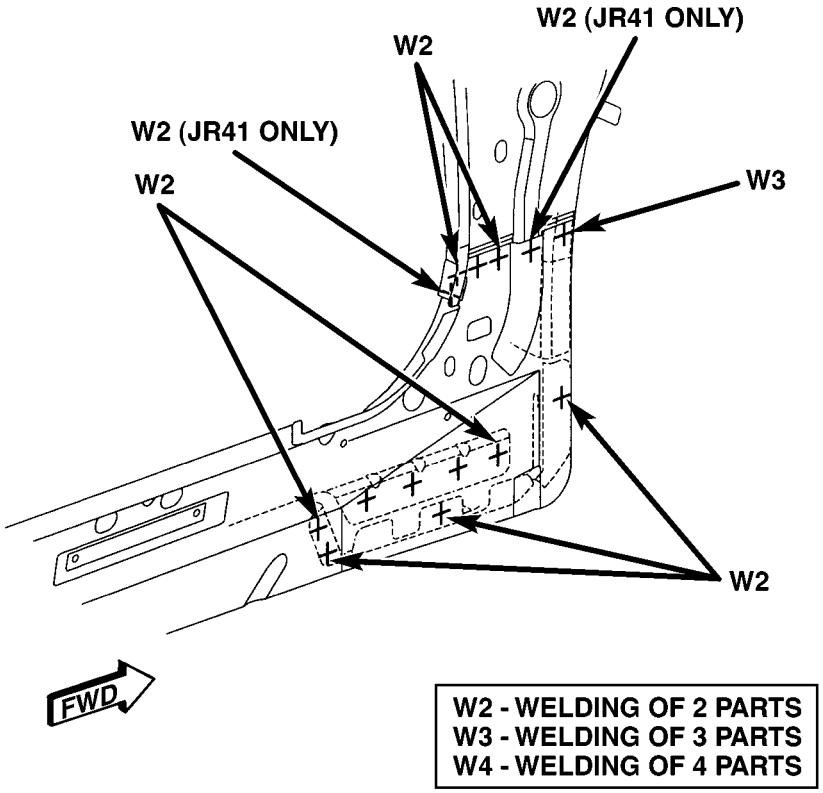

Fig. 201 INNER BODY SIDE SILL TO DASH PANEL TO COWL SIDE PANEL

WELD LOCATIONS (Continued)

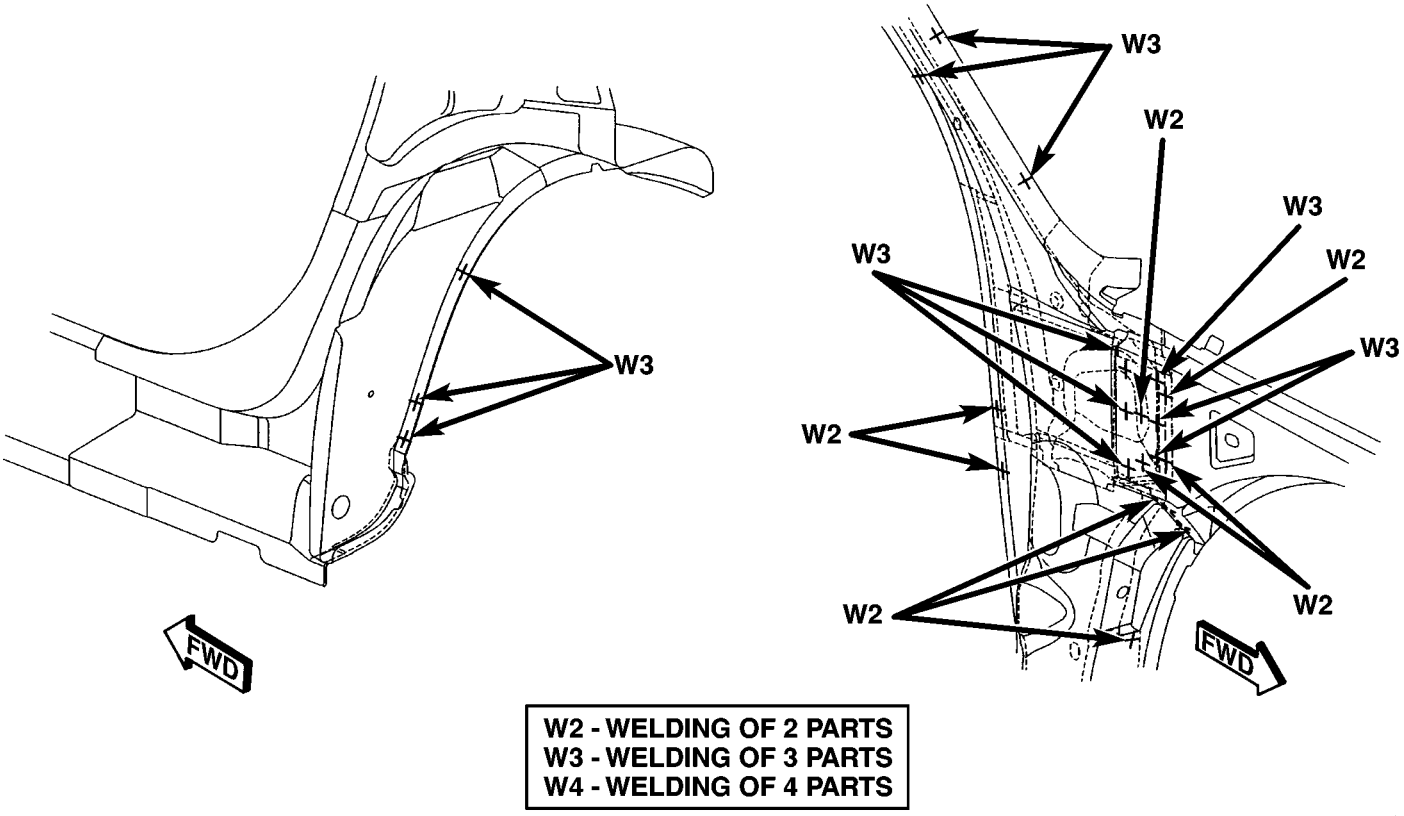

Fig. 202 INNER TO OUTER WINDSHIELD FRAME, OUTER LOAD BEAM & HINGE PILLAR REINFORCEMENT TO BODY SIDE APERTURE

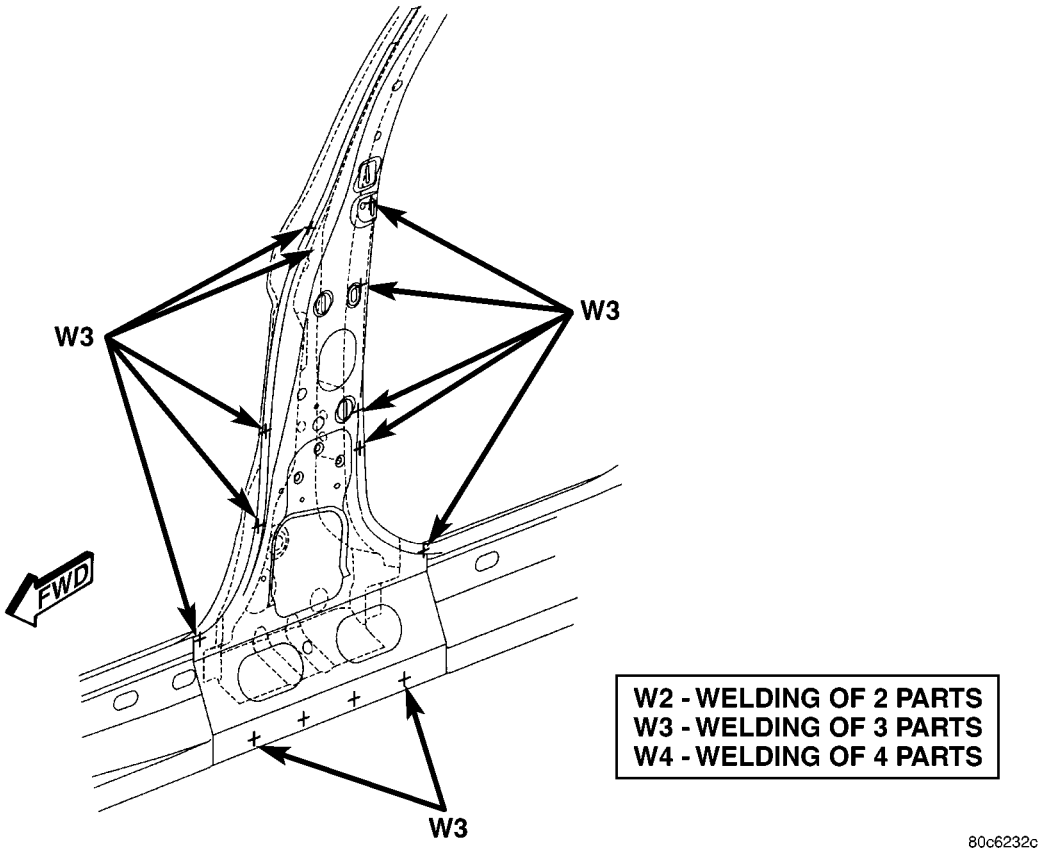

Fig. 203 CENTER PILLAR REINFORCEMENT TO INNER CENTER PILLAR TO BODY SIDE APERTURE

WELD LOCATIONS (Continued)

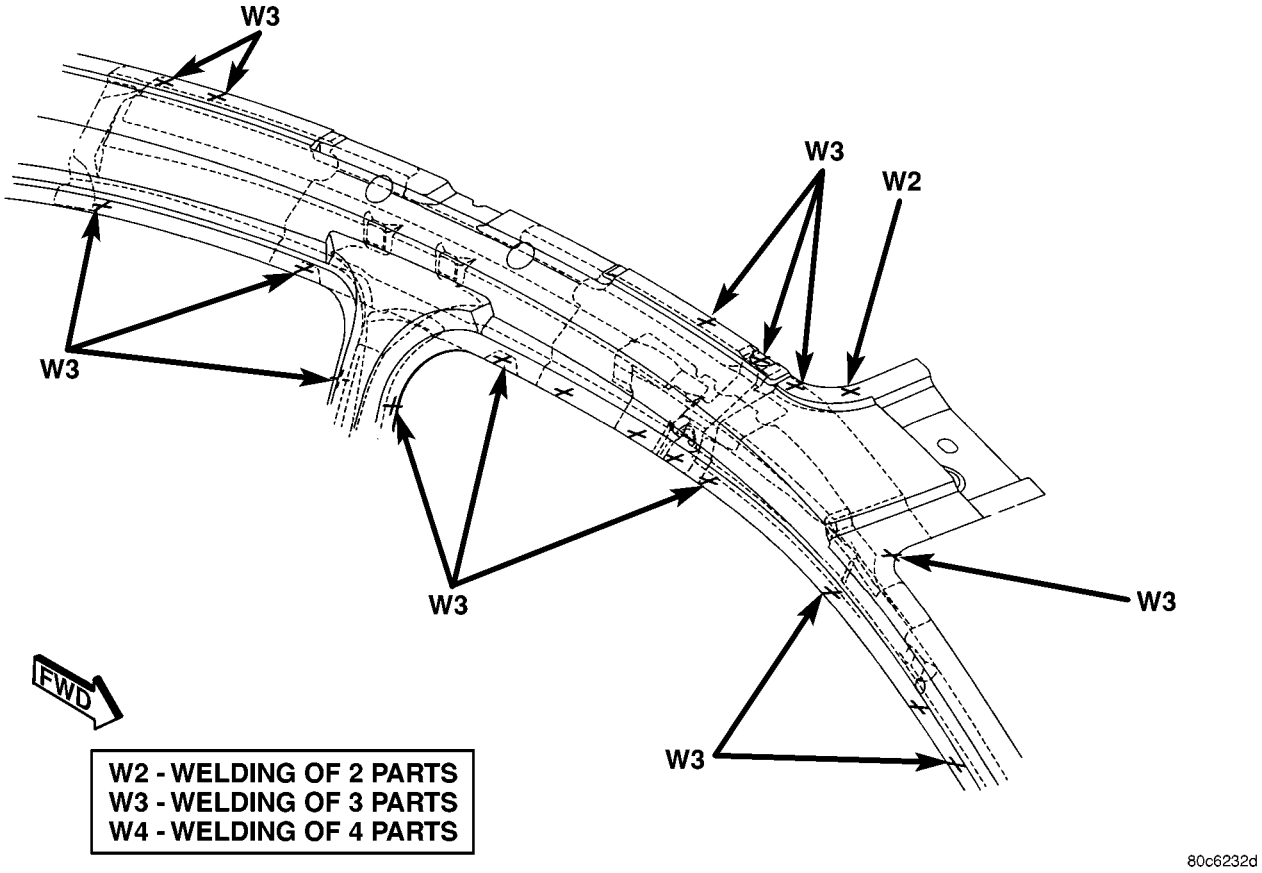

Fig. 204 INNER CENTER PILLAR, WINDSHIELD FRAME & INNER ROOF RAIL TO BODY SIDE APERTURE

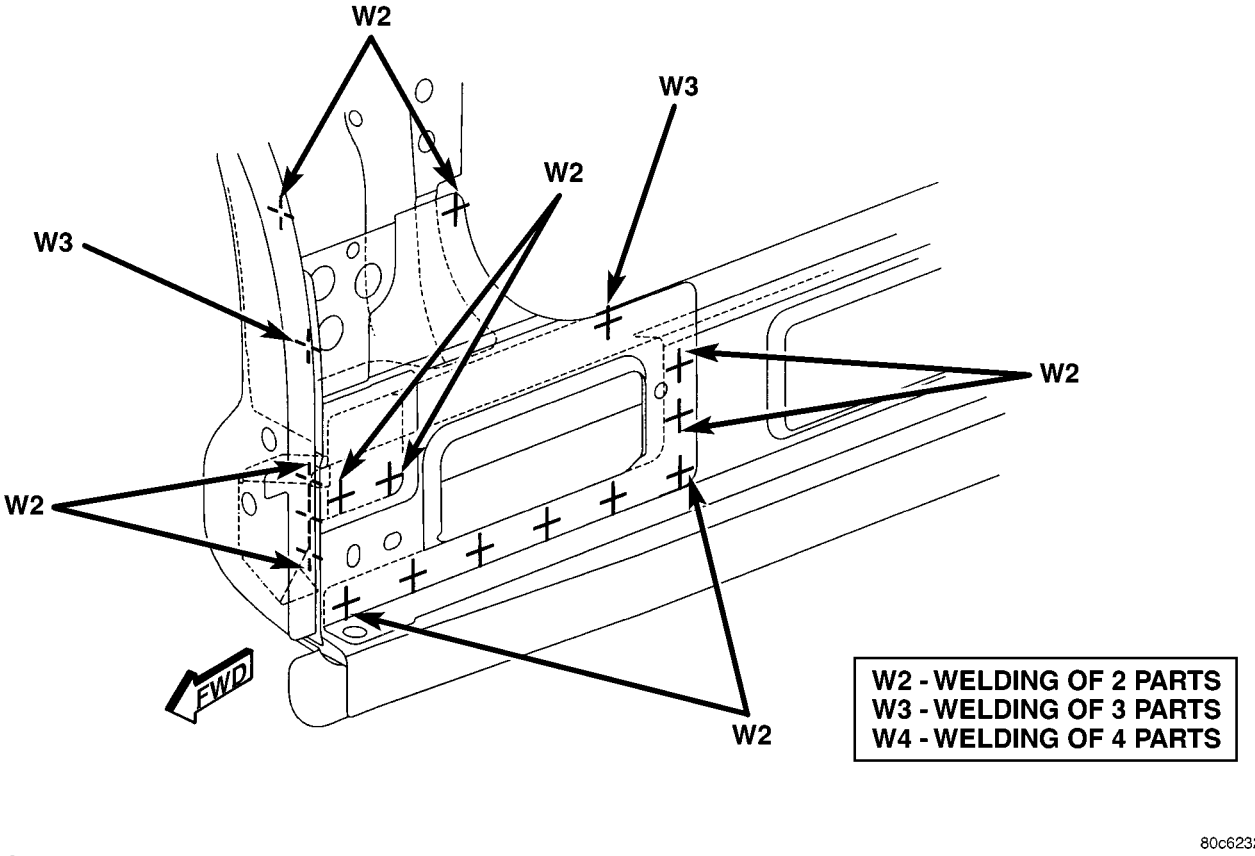

Fig. 205 HINGE PILLAR REINFORCEMENT TO SILL BEAM TO SIDE SILL REINFORCEMENT

WELD LOCATIONS (Continued)

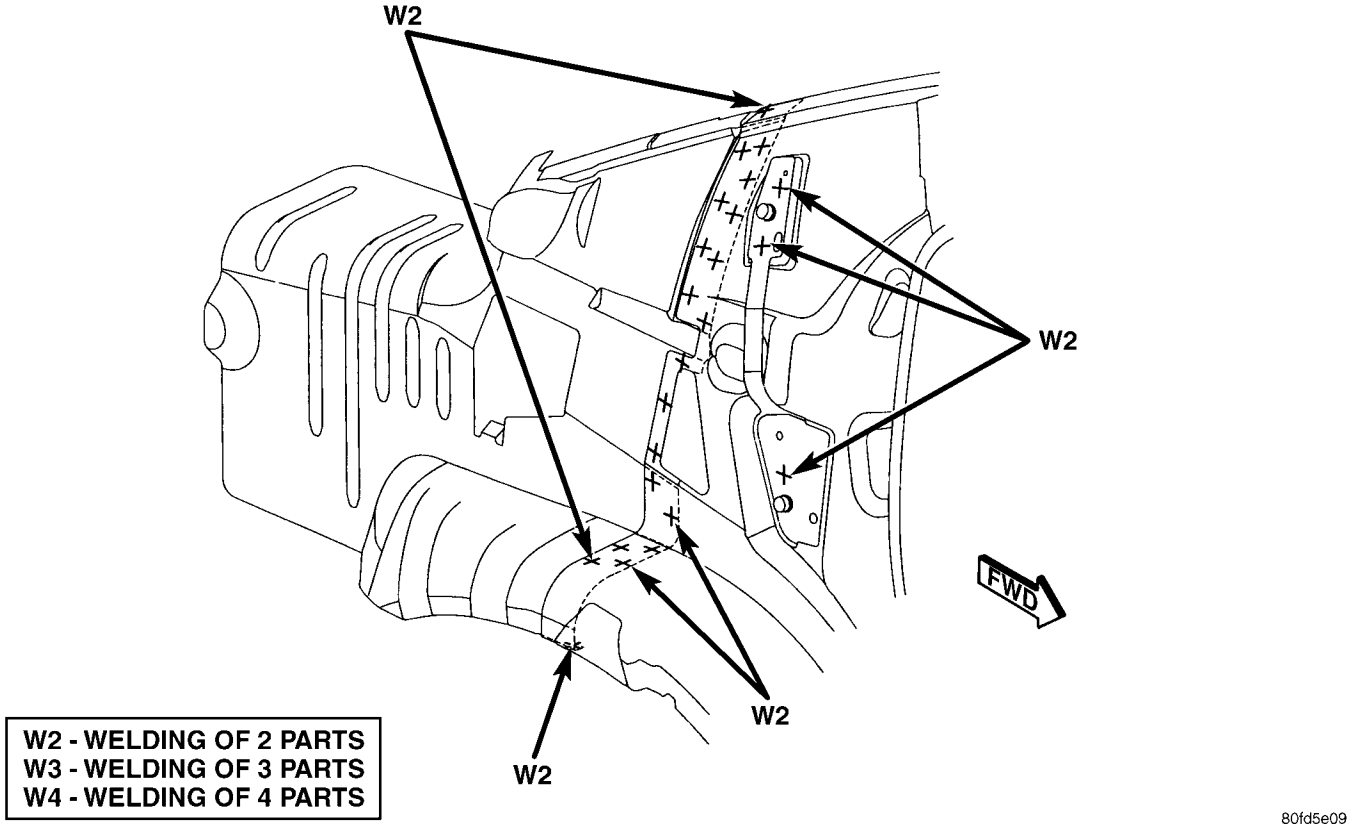

Fig. 206 OUTER REAR WHEELHOUSE & SEAT BELT ANCHOR REINFORCEMENT TO BODY SIDE APERTURE

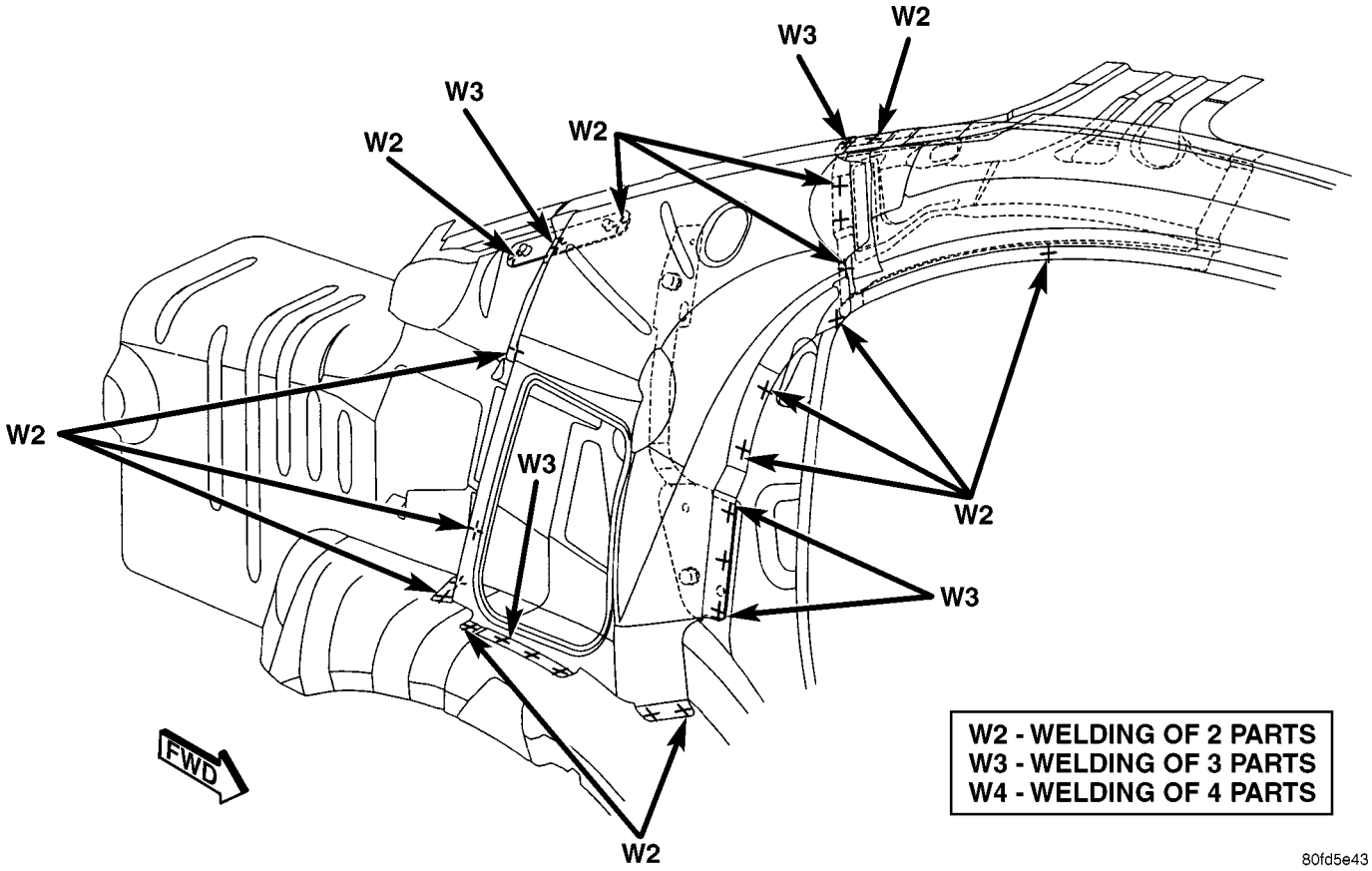

Fig. 207 INNER QUARTER PANEL REINFORCEMENT TO INNER QUARTER PANEL TO BODY SIDE APERTURE

WELD LOCATIONS (Continued)

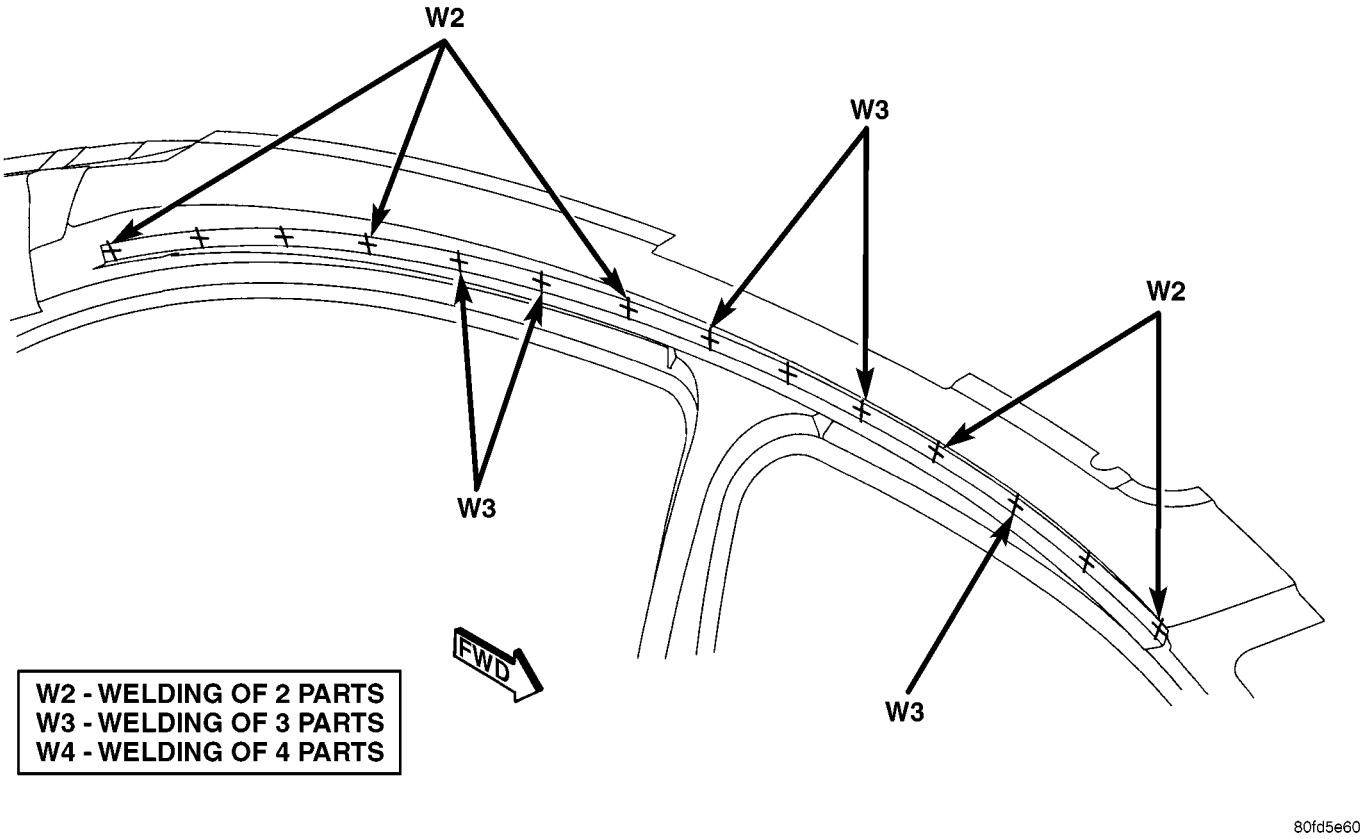

Fig. 208 DRIP RAIL/ROOF SUPPORT TO BODY SIDE APERTURE

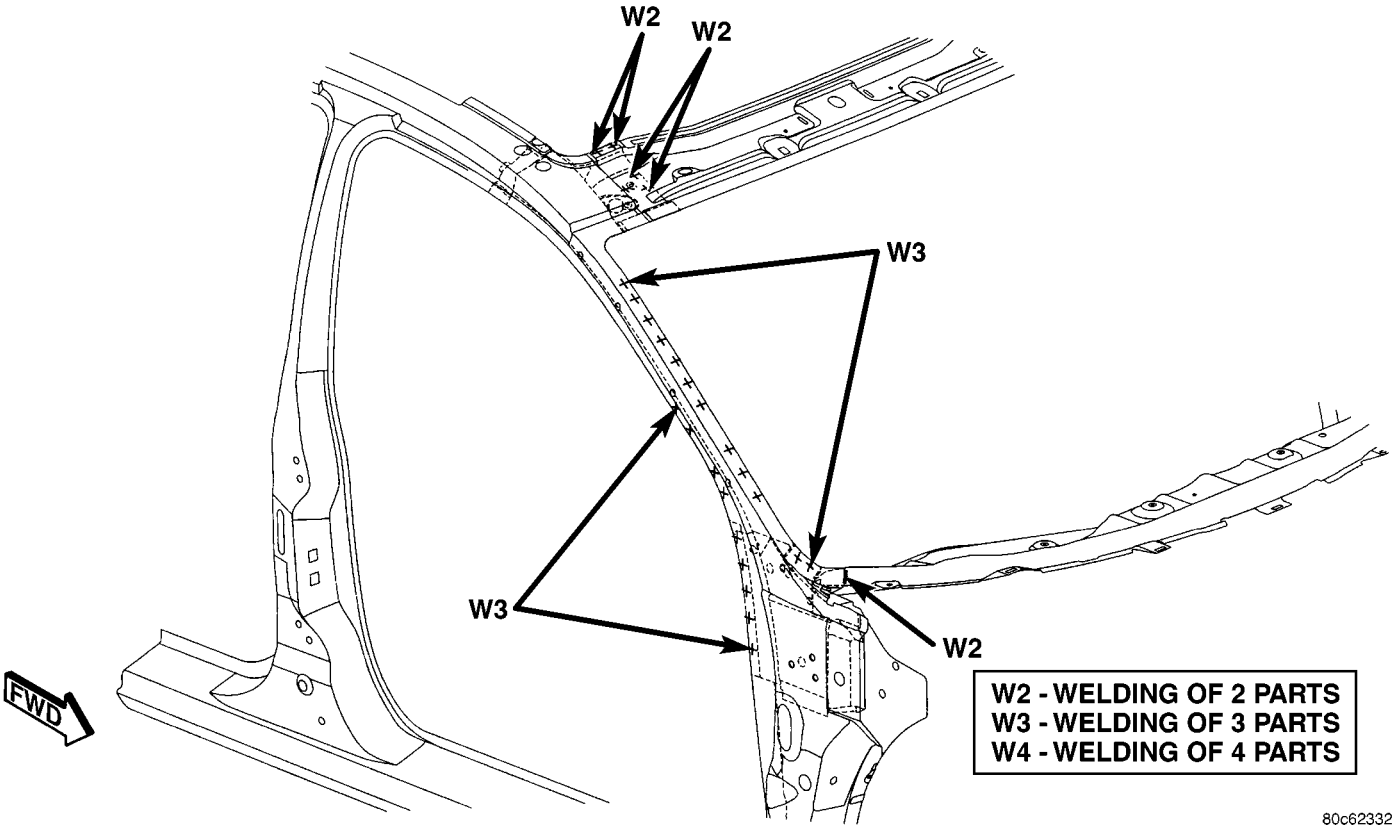

Fig. 209 OUTER WINDSHIELD FRAME TO INNER WINDSHIELD FRAME TO COWL SIDE PANEL

WELD LOCATIONS (Continued)

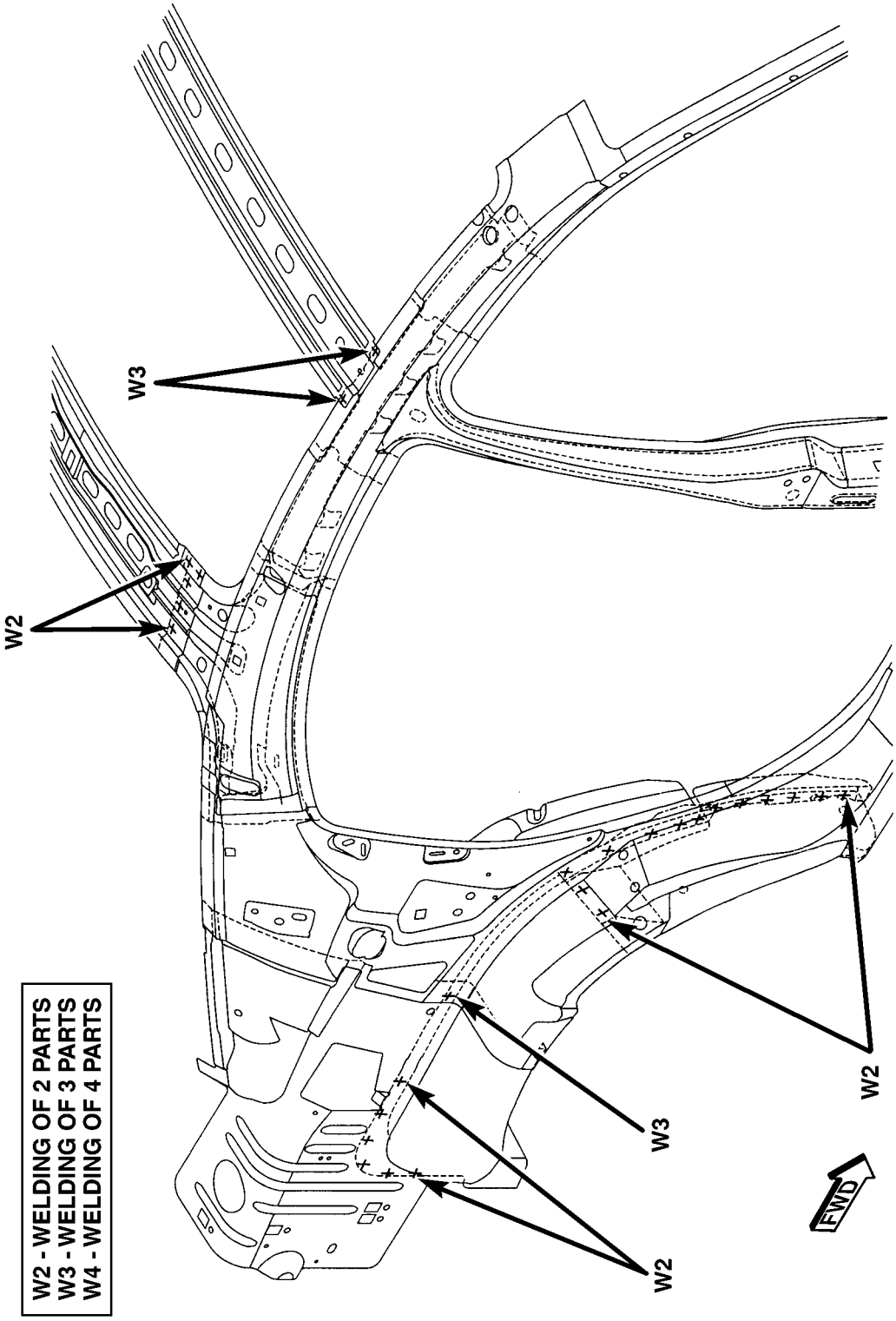

Fig. 210 OUTER REAR WHEELHOUSE & REAR SILL TO BODY SIDE APERTURE ROOF BOWS TO CENTER PILLAR REINFORCEMENT

WELD LOCATIONS (Continued)

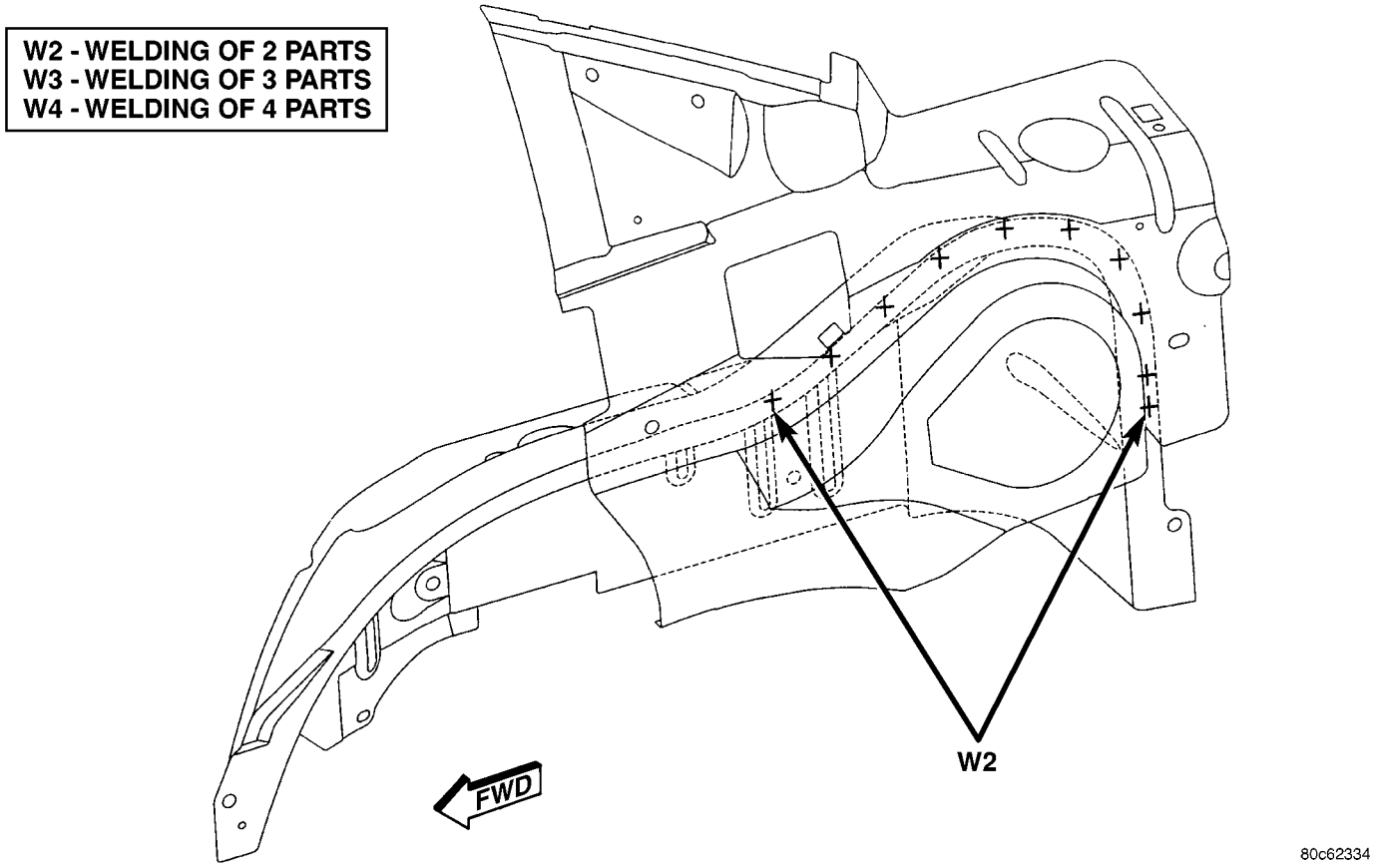

Fig. 211 REAR INNER WHEELHOUSE TO REAR OUTER WHEELHOUSE

WELD LOCATIONS (Continued)

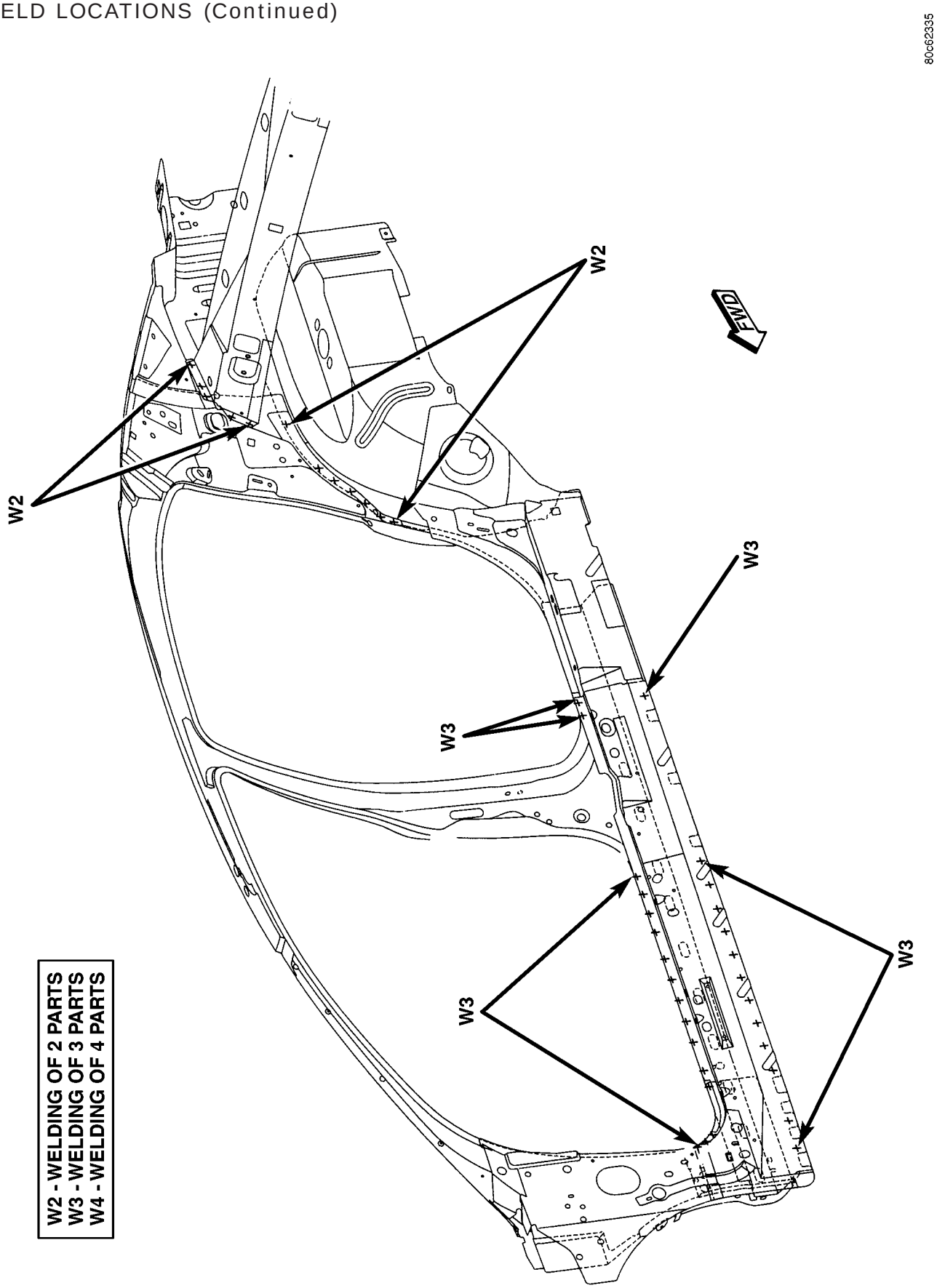

Fig. 212 INNER BODY SILL TO HINGE PILLAR REINFORCEMENT TO SILL BEAM TO BODY SIDE APERTURE

WELD LOCATIONS (Continued)

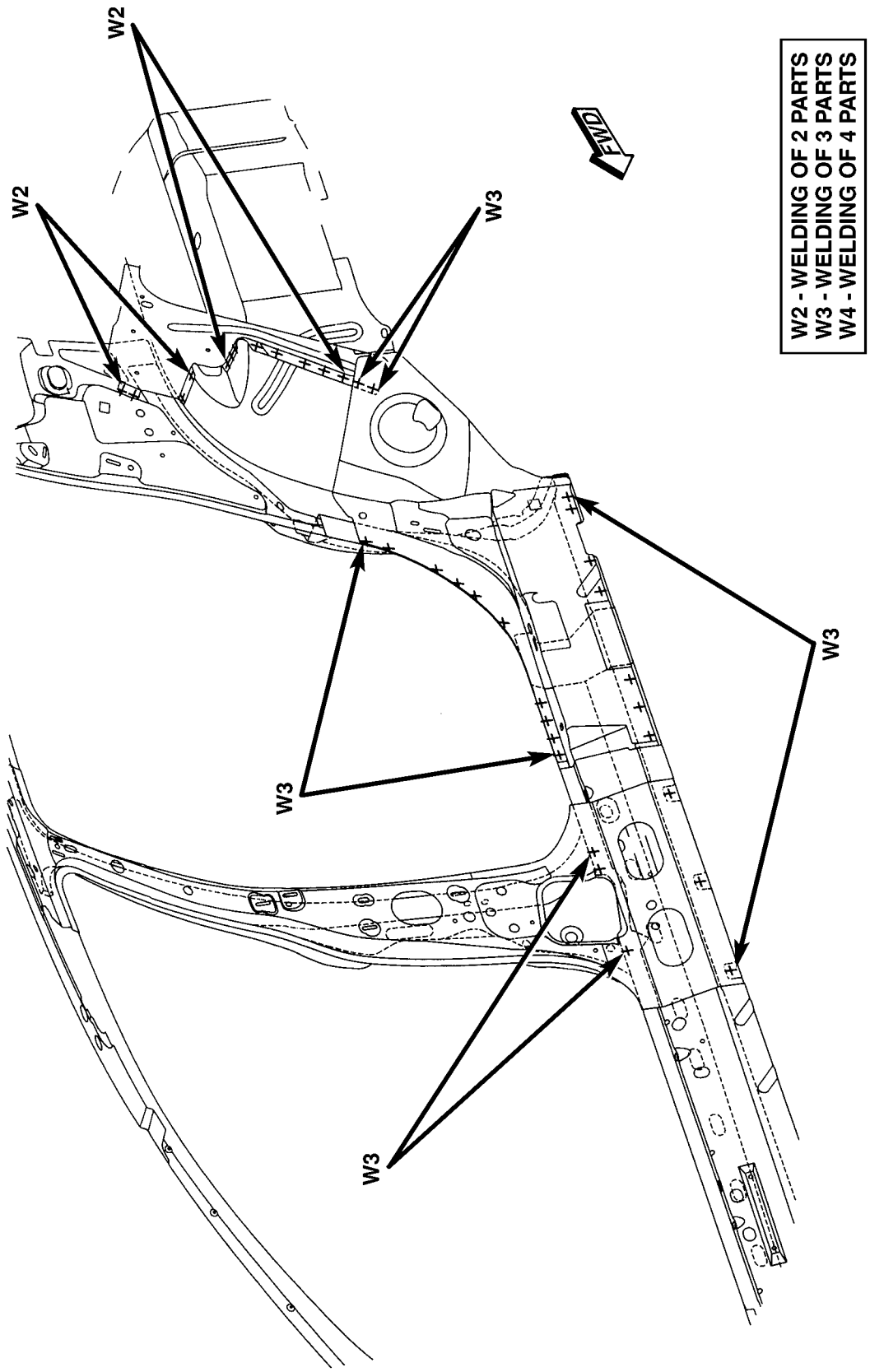

Fig. 213 INNER SILL EXTENSION TO SIDE SILL REINFORCEMENT TO BODY SIDE APERTURE & INNER REAR WHEELHOUSE

WELD LOCATIONS (Continued)

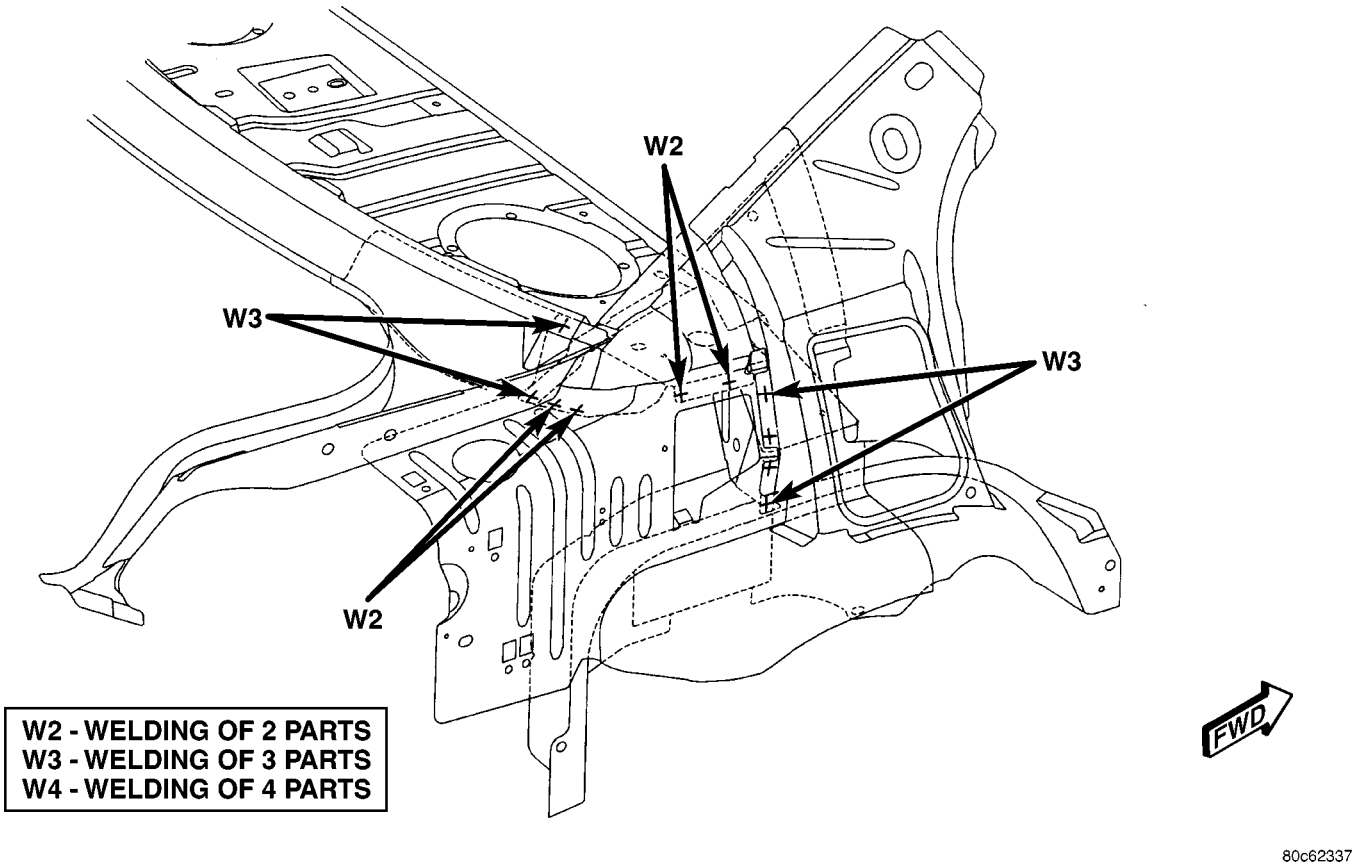

Fig. 214 REAR SHELF SUPPORT TO WHEELHOUSE TO REAR OUTER WHEELHOUSE

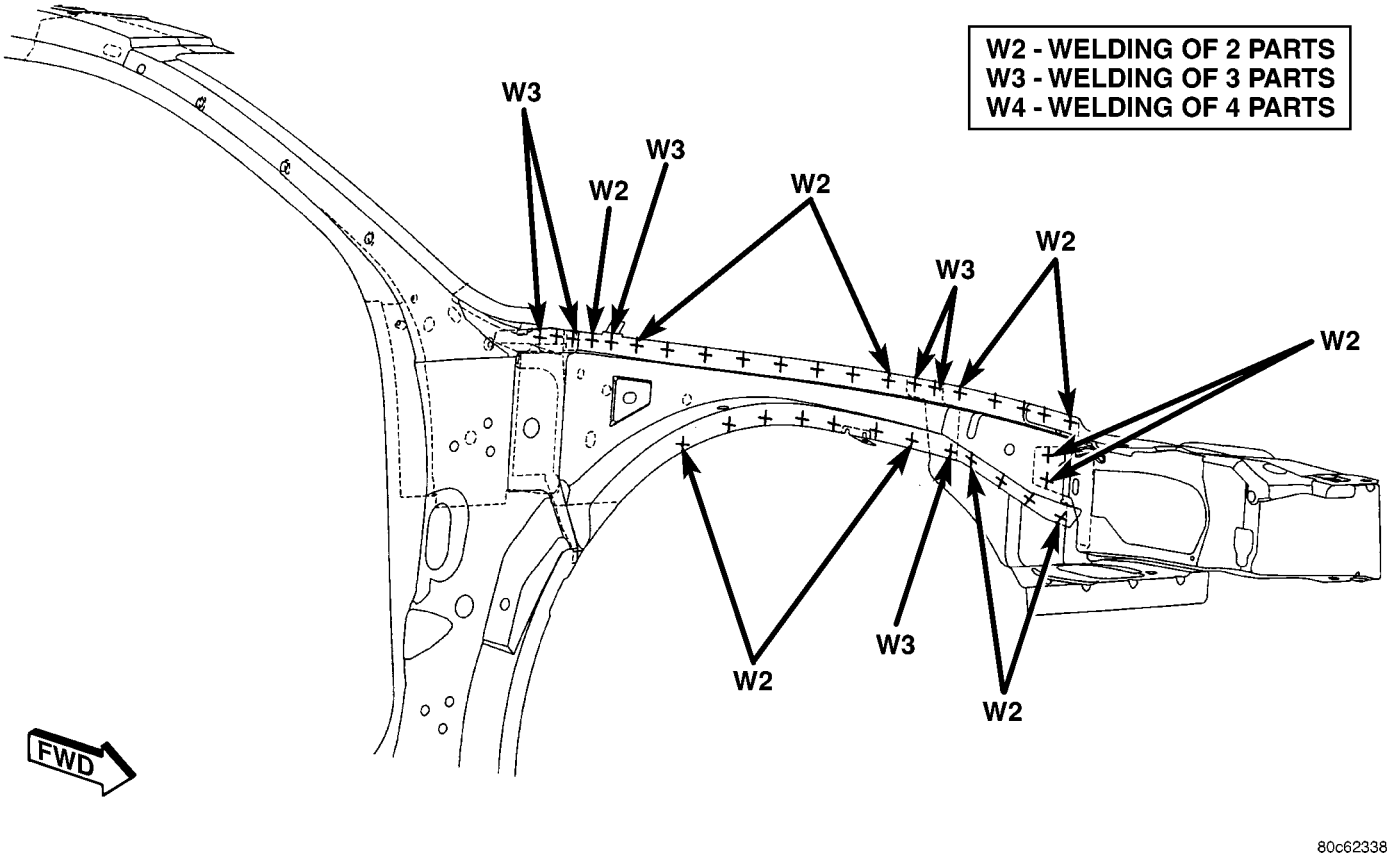

Fig. 215 UPPER OUTER LOAD BEAM TO UPPER INNER LOAD BEAM TO BODY SIDE APERTURE

WELD LOCATIONS (Continued)

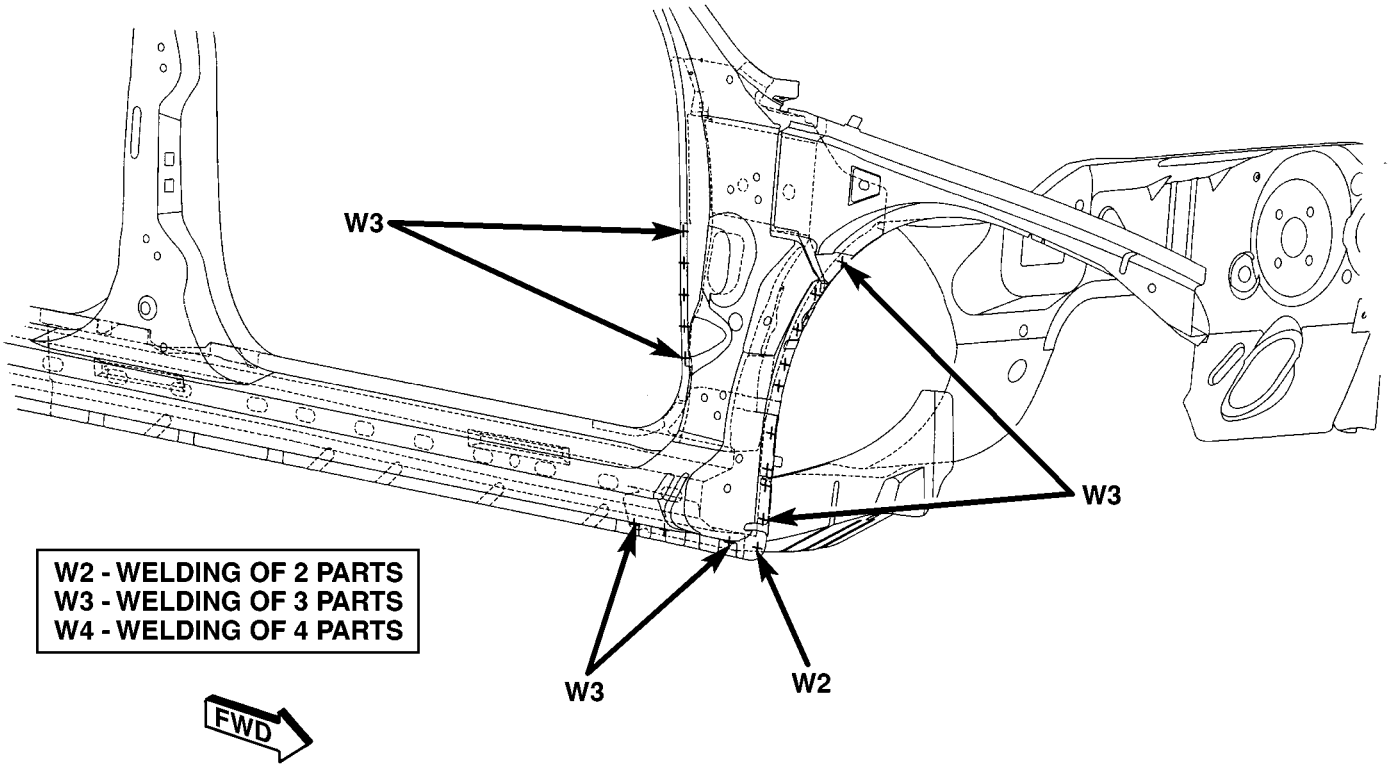

Fig. 216 INNER BODY SIDE SILL TO COWL SIDE PANEL TO BODY SIDE APERTURE TO DASH PANEL

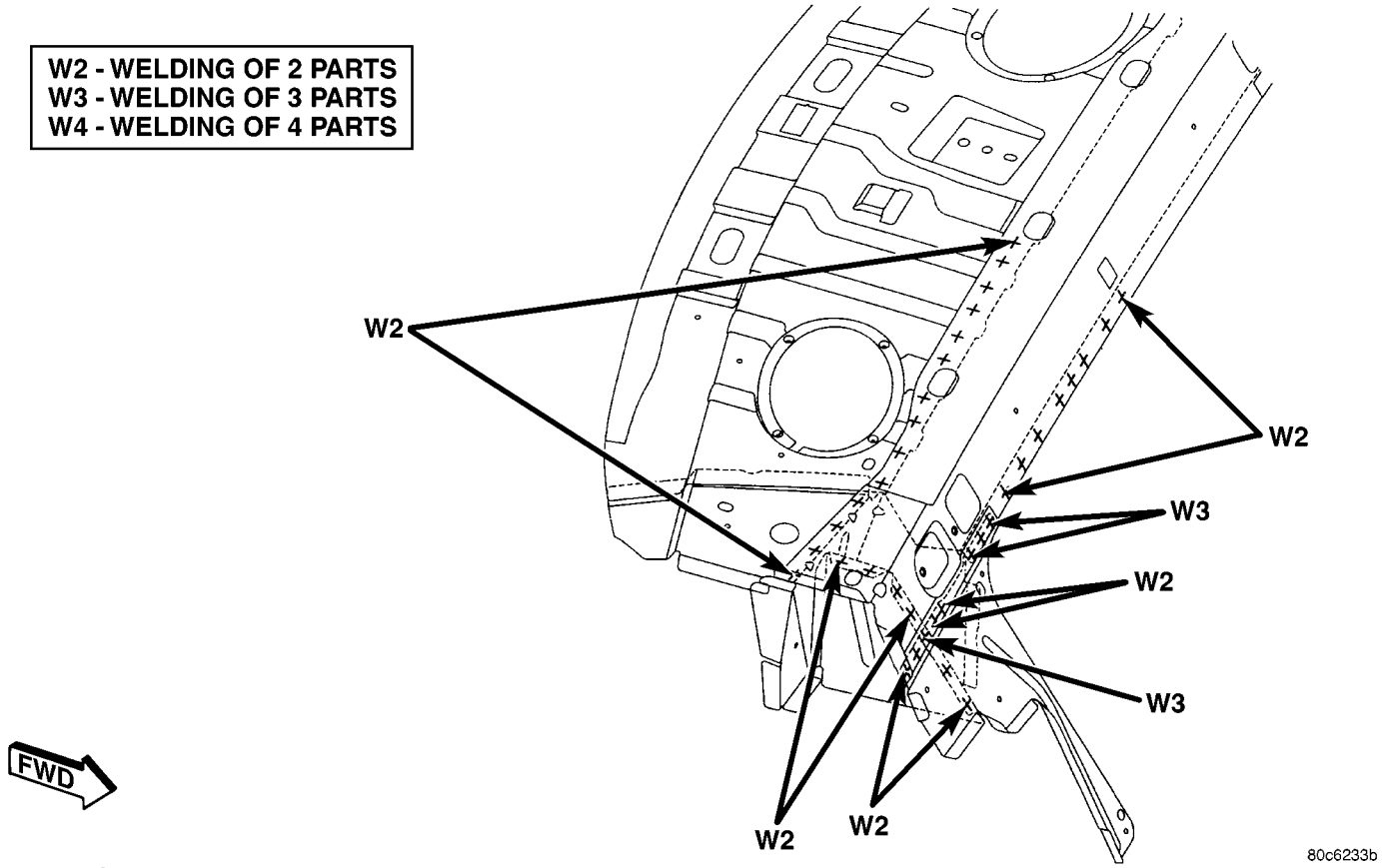

Fig. 217 REAR SHELF PANEL SUPPORTS TO WHEELHOUSE TO SHELF PANEL REINFORCEMENT

WELD LOCATIONS (Continued)

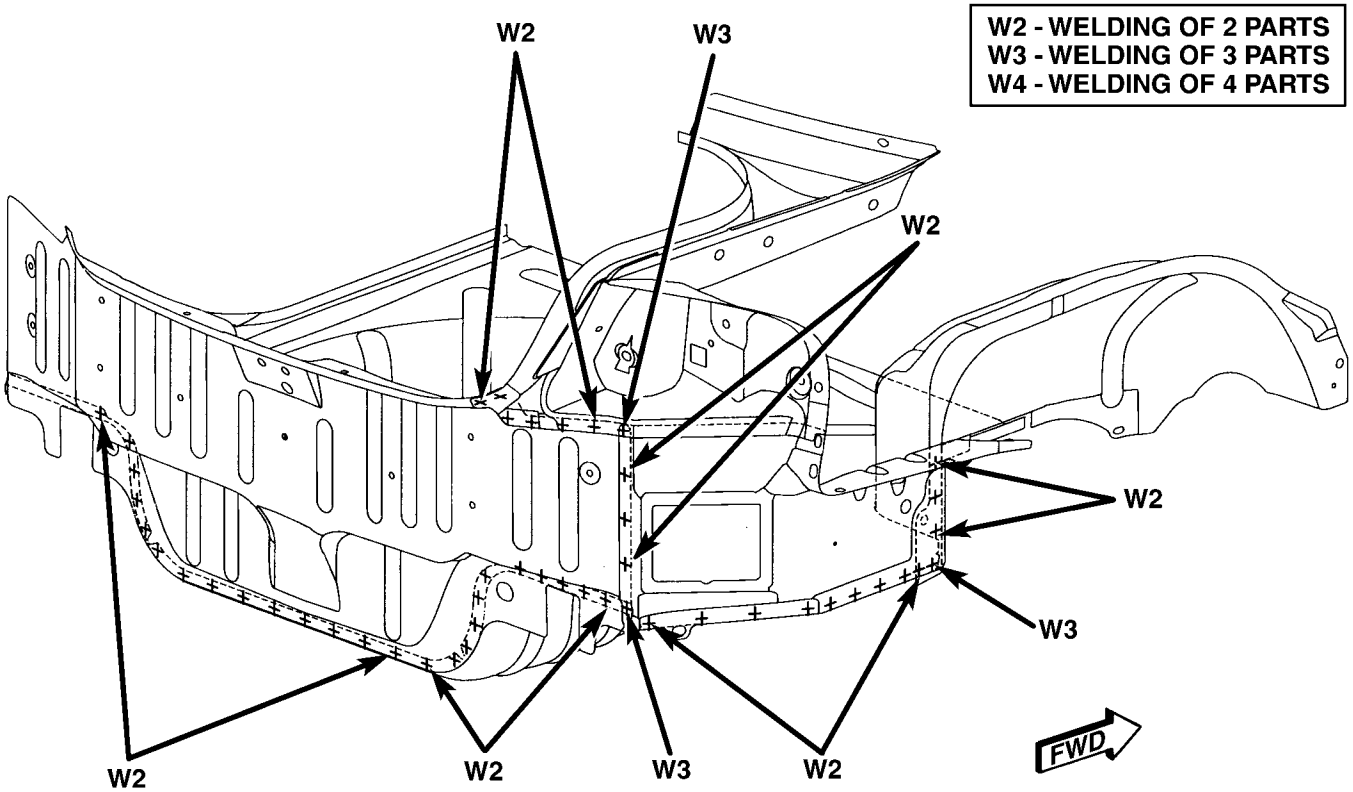

80c6233c

Fig. 218 LOWER DECK OPENING PANEL TO QUARTER EXTENSION TO REAR FLOOR PAN

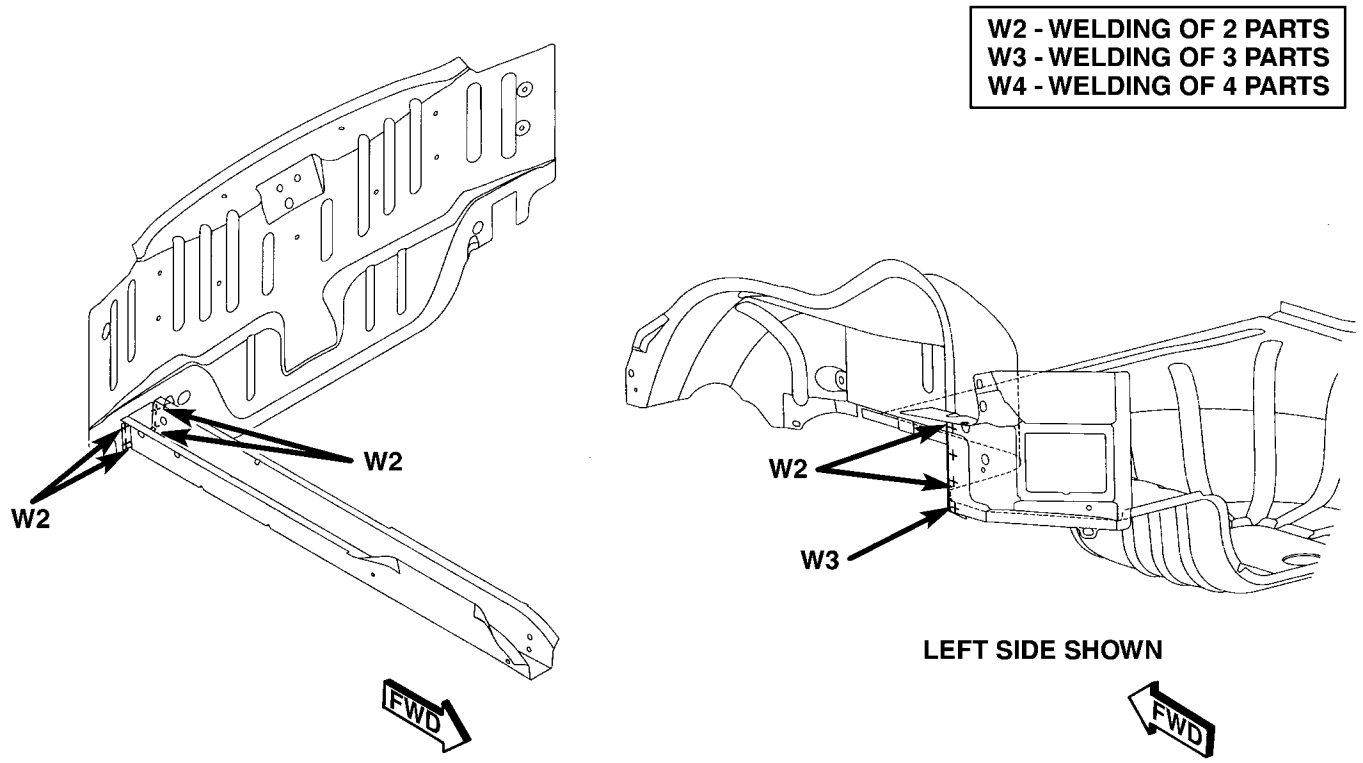

80c6233e

Fig. 219 REAR FLOOR PAN SIDE RAIL TO LOWER DECK OPENING PANEL/REAR WHEELHOUSE TO QUARTER EXTENSION TO REAR FLOOR PAN

WELD LOCATIONS (Continued)

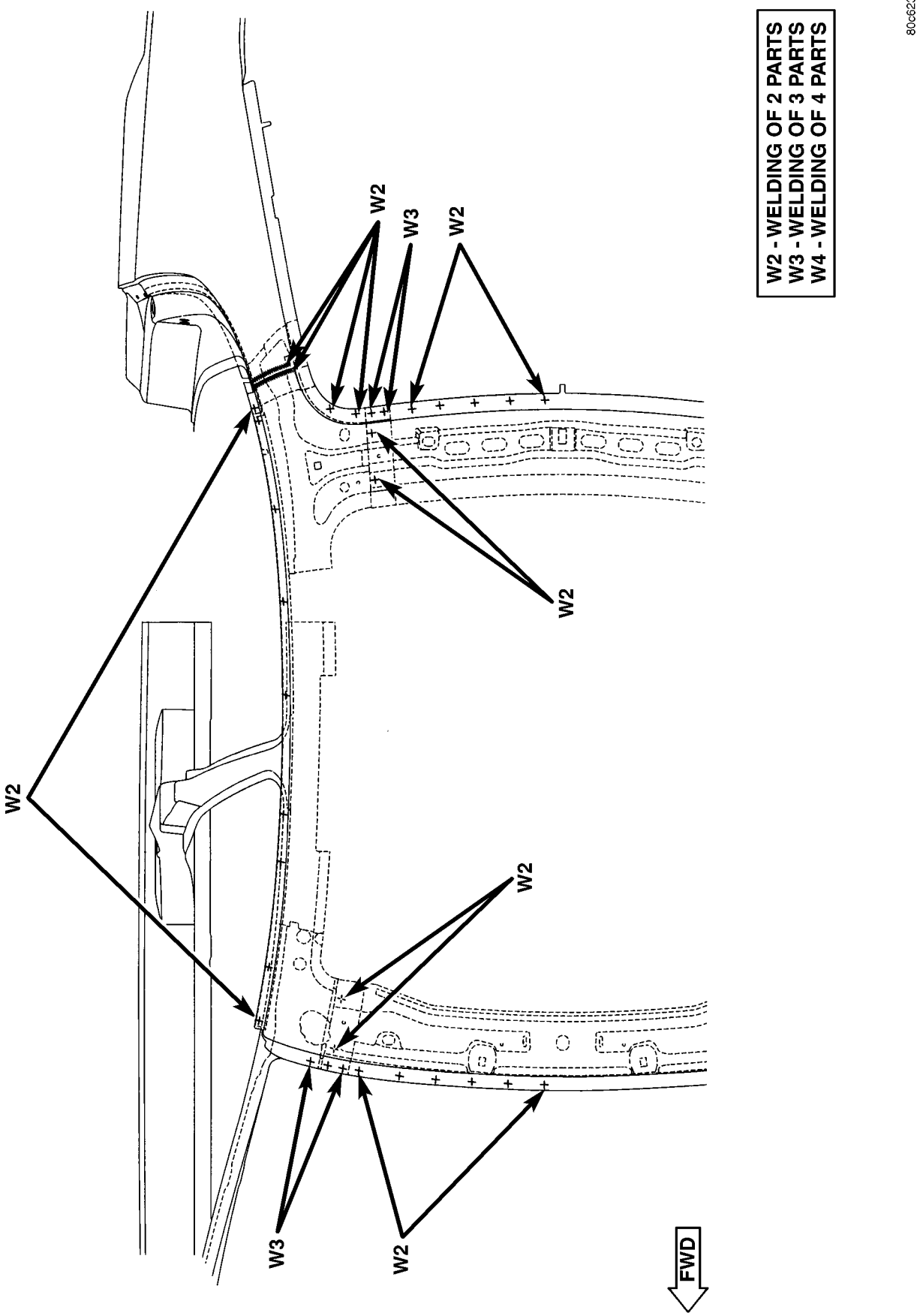

Fig. 220 INNER WINDSHIELD FRAME TO WINDSHIELD FRAME & REAR WINDOW FRAME TO UPPER INNER QUARTER PANEL TO OUTER ROOF PANEL

WELD LOCATIONS (Continued)

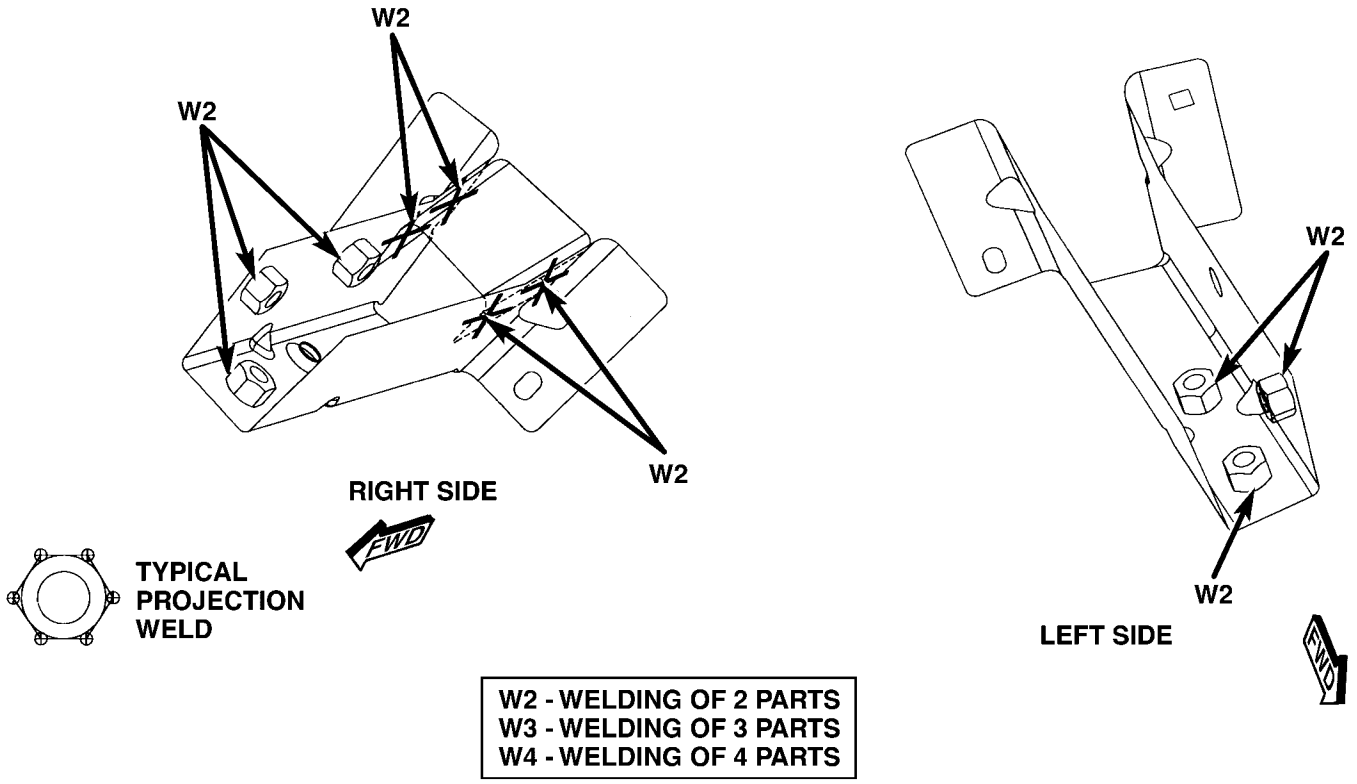

80c62352

Fig. 221 REAR BUMPER ATTACHING REINFORCEMENT TO REAR RAIL BUMPER ATTACHING BRACKET

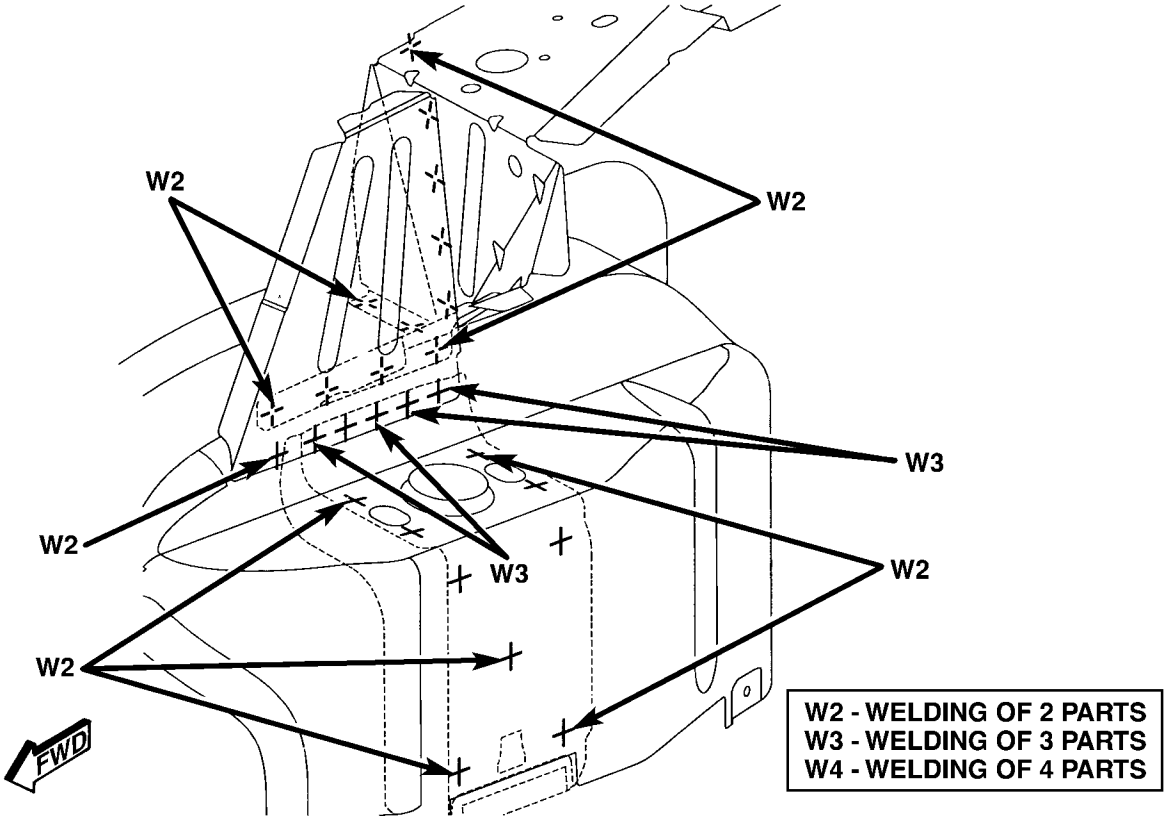

80c62357

Fig. 222 REAR SHELF PANEL SUPPORT TO REINFORCEMENT TO INNER REAR WHEELHOUSE TO REAR SHOCK MOUNTING BRACKET

WELD LOCATIONS (Continued)

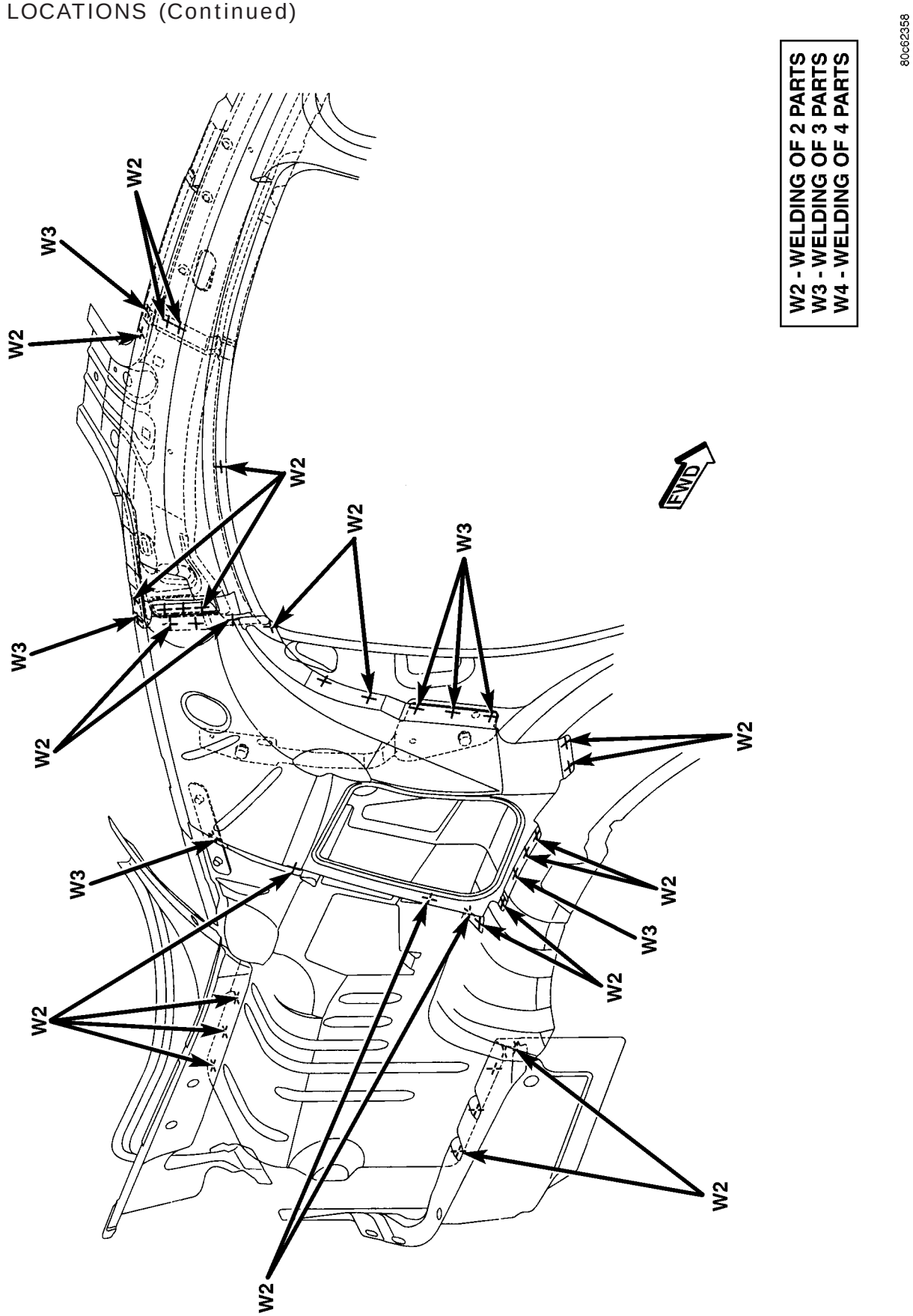

Fig. 223 INNER UPPER QUARTER PANEL TO REINFORCEMENT TO OUTER REAR WHEELHOUSE TO BODY SIDE APERTURE

WELD LOCATIONS (Continued)

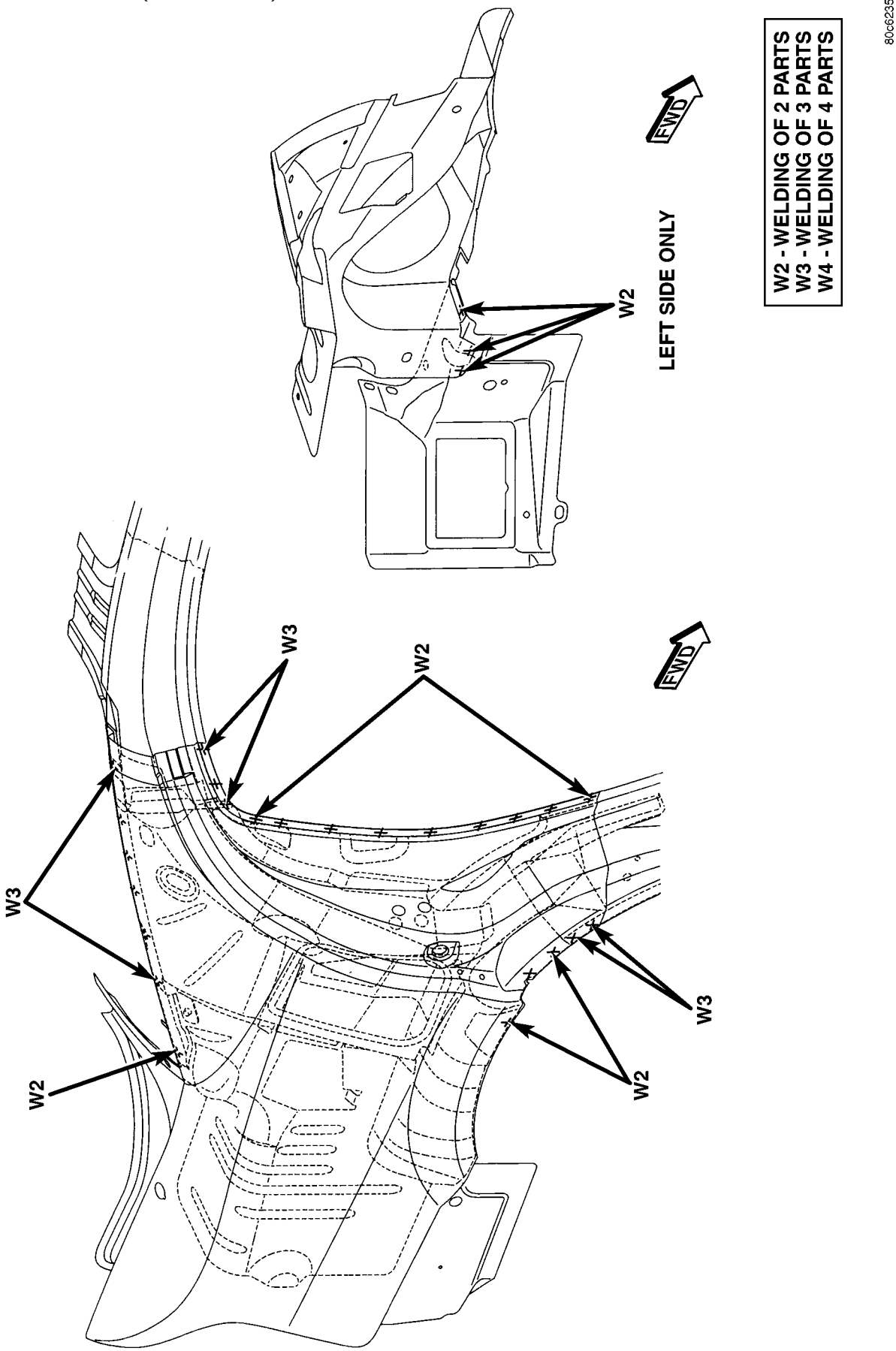

Fig. 224 INNER UPPER QUARTER PANEL REINFORCEMENT TO BODY SIDE APERTURE TO OUTER QUARTER PANEL

WELD LOCATIONS (Continued)

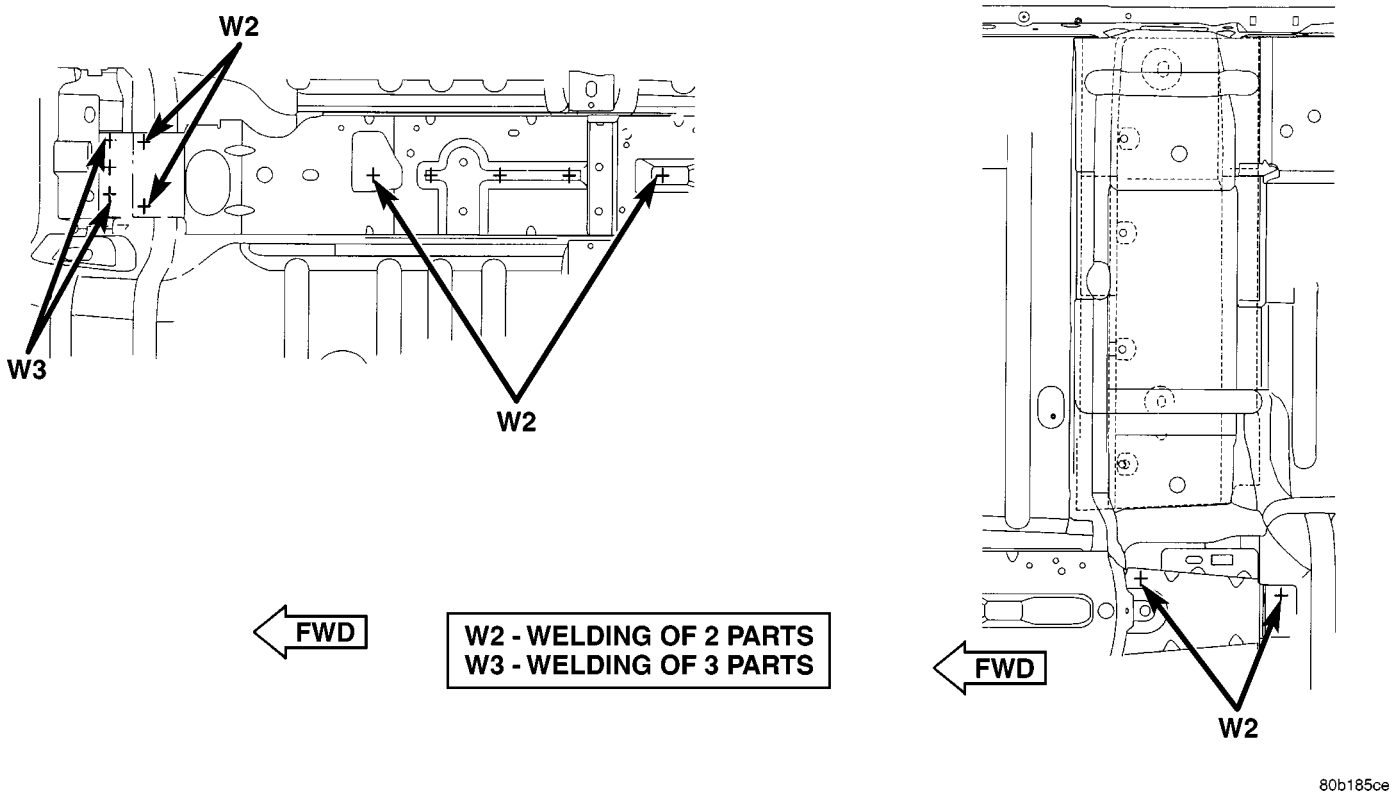

Fig. 225 FRONT CONSOLE BRACKET TO FRONT FLOOR PAN

HEATING & AIR CONDITIONING

TABLE OF CONTENTS

page

HEATING & AIR CONDITIONING
WARNING 1
CAUTION
SERVICE CAUTIONS 2
DIAGNOSIS AND TESTING
DIAGNOSIS AND TESTING - HEATER PERFORMANCE 2
DIAGNOSIS AND TESTING - AIR CONDITIONING SYSTEM 3
DIAGNOSIS AND TESTING - REFRIGERANT OIL 4
DIAGNOSIS AND TESTING - SELF DIAGNOSTICS. 5
STANDARD PROCEDURE
STANDARD PROCEDURE - TUBING AND FITTINGS 8
STANDARD PROCEDURE - REFRIGERANT EQUIPMENT 8
STANDARD PROCEDURE - SYSTEM CHARGE LEVEL 9
STANDARD PROCEDURE - CHARGING A/C SYSTEM 9
STANDARD PROCEDURE - EVACUATING A/C SYSTEM 10
STANDARD PROCEDURE- REFRIGERANT RECOVERY 10
SPECIFICATIONS
AIR CONDITIONING 11
A/C APPLICATION TABLE-ATC 11
CONTROLS 12
DISTRIBUTION 29
PLUMBING 41

HEATING & AIR CONDITIONING

WARNING

WARNING: WEAR EYE PROTECTION WHEN SERVICING THE AIR CONDITIONING REFRIGERANT SYSTEM. SERIOUS EYE INJURY CAN RESULT FROM EYE CONTACT WITH REFRIGERANT. IF EYE CONTACT IS MADE, SEEK MEDICAL ATTENTION IMMEDIATELY.
DO NOT EXPOSE REFRIGERANT TO OPEN FLAME. POISONOUS GAS IS CREATED WHEN REFRIGERANT IS BURNED. AN ELECTRONIC TYPE LEAK DETECTOR IS RECOMMENDED.
LARGE AMOUNTS OF REFRIGERANT RELEASED IN A CLOSED WORK AREA WILL DISPLACE THE OXYGEN AND CAUSE SUFFOCATION.
THE EVAPORATION RATE OF REFRIGERANT AT AVERAGE TEMPERATURE AND ALTITUDE IS EXTREMELY HIGH. AS A RESULT, ANYTHING THAT COMES IN CONTACT WITH THE REFRIGERANT WILL FREEZE. ALWAYS PROTECT SKIN OR DELICATE OBJECTS FROM DIRECT CONTACT WITH REFRIGERANT. R-134a SERVICE EQUIPMENT OR VEHICLE A/C SYSTEM SHOULD NOT BE PRESSURE TESTED OR LEAK TESTED WITH COMPRESSED AIR.
SOME MIXTURES OF AIR and R-134a HAVE BEEN SHOWN TO BE COMBUSTIBLE AT ELEVATED PRESSURES. THESE MIXTURES ARE POTENTIALLY DANGEROUS AND MAY RESULT IN FIRE OR EXPLOSION CAUSING INJURY OR PROPERTY DAMAGE.

WARNING: AVOID BREATHING A/C REFRIGERANT AND LUBRICANT VAPOR OR MIST. EXPOSURE MAY IRRITATE EYES, NOSE AND THROAT. USE ONLY APPROVED SERVICE EQUIPMENT MEETING SAE REQUIREMENTS TO DISCHARGE R-134a SYSTEM. IF ACCIDENTAL SYSTEM DISCHARGE OCCURS, VENTILATE WORK AREA BEFORE RESUMING SERVICE.
R-134a SERVICE EQUIPMENT OR VEHICLE A/C SYSTEM SHOULD NOT BE PRESSURE TESTED OR LEAK TESTED WITH COMPRESSED AIR. SOME MIXTURES OF AIR/R-134a HAVE BEEN SHOWN TO BE COMBUSTIBLE AT ELEVATED PRESSURES. THESE MIXTURES ARE POTENTIALLY DANGEROUS AND MAY RESULT IN FIRE OR EXPLOSION CAUSING INJURY OR PROPERTY DAMAGE.

WARNING: NEVER REMOVE REFRIGERANT LINE CLIP OR DISCONNECT BEFORE RECLAIMING ALL THE REFRIGERANT FROM THE SYSTEM. PERSONAL INJURY CAN RESULT.

HEATING & AIR CONDITIONING (Continued)

WARNING: ANTIFREEZE IS AN ETHYLENE GLYCOL BASE COOLANT AND IS HARMFUL IF SWALLOWED OR INHALED. SEEK MEDICAL ATTENTION IMMEDIATELY IF SWALLOWED OR INHALED. DO NOT STORE IN OPEN OR UNMARKED CONTAINERS. WASH SKIN AND CLOTHING THOROUGHLY AFTER COMING IN CONTACT WITH ETHYLENE GLYCOL. KEEP OUT OF REACH OF CHILDREN AND PETS.

DO NOT OPEN A COOLING SYSTEM WHEN THE ENGINE IS AT RUNNING TEMPERATURE. PERSONAL INJURY CAN RESULT.

CAUTION

SERVICE CAUTIONS

CAUTION: Liquid refrigerant is corrosive to metal surfaces. Follow the operating instructions supplied with the service equipment being used.

Never add R-12 to a refrigerant system designed to use R-134a. Damage to the system will result.

R-12 refrigerant oil must not be mixed with R-134a refrigerant oil. They are not compatible.

Do not use R-12 equipment or parts on the R-134a system. Damage to the system will result.

Do not overcharge the refrigerant system. This will cause excessive compressor head pressure and can cause noise and system failure.

Recover the refrigerant before opening any fitting or connection. Open the fittings with caution, even after the system has been discharged. Never open or loosen a connection before recovering the refrigerant.

Do not remove the secondary retention clip from any spring-lock coupler connection while the refrigerant system is under pressure. Recover the refrigerant before removing the secondary retention clip. Open the fittings with caution, even after the system has been discharged. Never open or loosen a connection before recovering the refrigerant.

The refrigerant system must always be evacuated before charging.

Do not open the refrigerant system or uncap a replacement component until you are ready to service the system. This will prevent contamination in the system.

Before disconnecting a component, clean the outside of the fittings thoroughly to prevent contamination from entering the refrigerant system.

Immediately after disconnecting a component from the refrigerant system, seal the open fittings with a cap or plug.

Before connecting an open refrigerant fitting, always install a new seal or gasket. Coat the fitting and seal with clean refrigerant oil before connecting.

Do not remove the sealing caps from a replacement component until it is to be installed.

When installing a refrigerant line, avoid sharp bends that may restrict refrigerant flow. Position the refrigerant lines away from exhaust system components or any sharp edges, which may damage the line.

Tighten refrigerant fittings only to the specified torque. The aluminum fittings used in the refrigerant system will not tolerate overtightening.

When disconnecting a refrigerant fitting, use a wrench on both halves of the fitting. This will prevent twisting of the refrigerant lines or tubes.

Refrigerant oil will absorb moisture from the atmosphere if left uncapped. Do not open a container of refrigerant oil until you are ready to use it. Replace the cap on the oil container immediately after using. Store refrigerant oil only in a clean, airtight, and moisture-free container.

Keep service tools and the work area clean. Contamination of the refrigerant system through careless work habits must be avoided.

DIAGNOSIS AND TESTING

DIAGNOSIS AND TESTING - HEATER PERFORMANCE

PRE-DIAGNOSTIC PREPARATIONS

Review Safety Precautions and Warnings in this group before performing the following procedures.

Check the coolant level, drive belt tension, vacuum line connections, radiator air flow and fan operation. Start engine and allow to warm up to normal temperature.

WARNING: DO NOT REMOVE RADIATOR CAP WHEN ENGINE IS HOT, PERSONAL INJURY CAN RESULT.

If vehicle has been run recently wait 15 minutes before removing cap. Place a rag over the cap and turn it to the first safety stop. Allow pressure to escape through the overflow tube. When the system stabilizes, remove the cap completely.

MAXIMUM HEATER OUTPUT

Engine coolant is provided to the heater system by two 16 mm (5/8 inch inside diameter) heater hoses. With engine idling at normal running temperature, set the control to maximum heat, floor, and high blower setting. Using a test thermometer, check the air temperature coming from the floor outlets, refer to Temperature Reference chart.

HEATING & AIR CONDITIONING (Continued)

TEMPERATURE REFERENCE CHART

Ambient Temp.		Minimum Floor Outlet Temp.	
Celsius	Fahrenheit	Celsius	Fahrenheit
15.5°	60°	62.2°	144°
21.1°	70°	63.8°	147°
26.6°	80°	65.5°	150°
32.2°	90°	67.2°	153°

If the floor outlet air temperature is insufficient, refer to 7 Cooling Systems for specifications. Both heater hoses should be HOT to the touch (coolant return hose should be slightly cooler than the supply hose). If coolant return hose is much cooler than the supply hose, locate and repair engine coolant flow obstruction in heater system.

POSSIBLE CAUSE OF LOW OR OBSTRUCTED COOLANT FLOW

(1) Pinched or kinked heater hoses.
(2) Improper heater hose routing.
(3) Plugged heater hoses or supply and return ports at cooling system connections.
(4) Plugged heater core.
(5) Air locked heater core or air in cooling system.
(6) If coolant flow is verified and outlet temperature is insufficient, a mechanical problem may exist.
(7) Low coolant level.
(8) Low water pump flow.

POSSIBLE CAUSE OF INSUFFICIENT HEAT

(1) Obstructed cowl air intake.
(2) Obstructed heater system outlets.
(3) Blend-air door not functioning properly.
(4) Evaporator freeze up.
(5) Low coolant level.
(6) Air locked heater core or air in the cooling system.

TEMPERATURE CONTROL

If temperature cannot be adjusted with the TEMP knob on the control panel, the following could require service:

(1) Blend-air door binding.
(2) Improper engine coolant temperature.
(3) Faulty Instrument Panel Control.
(4) Wiring or a fuse problem.

DIAGNOSIS AND TESTING - AIR CONDITIONING SYSTEM

The air conditioning system is designed to remove heat and humidity from the air entering the passenger compartment. The evaporator, located in the heater A/C unit, is cooled to temperatures near the freezing point. As warm damp air passes over the fins in the evaporator, moisture in the air condenses to water, dehumidifying the air. Condensation on the evaporator fins reduces the evaporators ability to absorb heat. During periods of high heat and humidity, an air conditioning system will be less effective. With the control module set to RECIRC, only air from the passenger compartment passes through the evaporator. As the passenger compartment air dehumidifies, A/C performance levels rise.

PERFORMANCE

Review all Warnings before proceeding with this procedure. Air temperature in test room and on vehicle must be 21° C (70°F) minimum for this test.

NOTE: When connecting the service equipment coupling to the line fitting, verify that the valve of the coupling is fully closed. This will reduce the amount of effort required to make the connection.

(1) Connect a tachometer and manifold gauge set or a A/C Charging/Recycling Station. Attach a thermocouple to the evaporator outlet line.
(2) Set controls:

MTC (Manual Temperature Control) System:

- A/C ON
- Panel Recirculation
- Temperature to full cold
- High blower

ATC (Automatic Temperature Control) System:

- Rotate blower knob to high position (full clockwise)
- Set temperature to the LO position
- Push panel mode button
- Push RECIRC (Recirculation) button (A/C and RECIRC symbols should be lit)

NOTE: The word MANUAL should appear in the ATC display, confirming that the system is set manually.

(3) Start engine and hold at 1000 rpm with A/C clutch engaged.
(4) Engine should be warmed up with doors and windows closed.
(5) Insert a thermometer or place a thermocouple in the left center A/C outlet and operate the engine for five minutes. The A/C clutch may cycle depending on ambient conditions.
(6) With the A/C clutch engaged, compare the discharge air temperature to the A/C Performance TEmperature table..

HEATING & AIR CONDITIONING (Continued)

A/C PERFORMANCE TEMPERATURE AND PRESSURE

AMBIENT TEMPERATURE	21°C (70°F)	26.5°C (80°F)	32.5°C (90°F)	37°C (100°F)	43°C (110°F)
MAXIMUM ALLOWABLE AIR TEMPERATURE AT CENTER LEFT PANEL OUTLET	6°C (42°F)	7°C (45°F)	10°C (50°F)	12°C (54°F)	15°C (59°F)
COMPRESSOR DISCHARGE PRESSURE	1379–1585 kPa (200–230 psi)	1448–1723 kPa (210–250 psi)	1654–1930 kPa (240–280 psi)	1930–2206 kPa (280–320 psi)	2206–2516 kPa (320–365 psi)
COMPRESSOR SUCTION PRESSURE	103–172 kPa (15–25 psi)	139–208 kPa (20–30 psi)	172–241 kPa (25–35 psi)	208–276 kPa (30–40 psi)	241–310 kPa (35–45 psi)

REFRIGERANT SYSTEM LEAK

If A/C system is not cooling properly, determine if refrigerant system is fully charged with R-134a. This is accomplished by performing a system Performance Test. If while performing this test A/C liquid line pressure is less than 345 kPa (50 psi) proceed to Refrigerant System Empty. If liquid line pressure is greater than 345 kPa (50 psi) proceed to Refrigerant System Low. If refrigerant system is empty or low a leak at a line fitting or component seal is likely. Check the fittings, lines and components for oily residue, this is an indication of a leak.

REFRIGERANT SYSTEM EMPTY

(1) Evacuate the refrigerant system to the lowest degree of vacuum possible (approx. 28 in Hg.). Determine if the system holds a vacuum for 15 minutes. If vacuum is held, a leak is probably not present. If system will not maintain vacuum level, proceed with this procedure.

(2) Prepare a .284 Kg. (10 oz.) refrigerant charge to be injected into the system.

(3) Connect and dispense .284 Kg. (10 oz.) of refrigerant into the evacuated refrigerant system.

(4) Proceed to the Low Refrigerant Level Leak Test.

REFRIGERANT SYSTEM LOW

(1) Determine if there is any R-134a refrigerant in the system.

(2) Position the vehicle in a wind free work area. This will aid in detecting small leaks.

(3) Bring the refrigerant system up to operating temperature and pressure. This is done by allowing the engine to run for five minutes with the system set to the following:

- Transaxle in Park
- Engine Idling at 700 rpm
- A/C Controls Set in 100 percent outside air
- Blower switch in the high A/C position
- A/C in the ON position
- Open all windows

CAUTION: Leak detectors designed for R-12 refrigerant (only) will not detect leaks in a R-134a refrigerant system.

(4) Shut off the vehicle and wait 2 to 7 minutes. Then use an Electronic Leak Detector that is designed to detect R-134a type refrigerant and search for leaks. Fittings, lines, or components that appear to be oily usually indicates a refrigerant leak. To inspect the evaporator core for leaks, insert the leak detector probe into the drain tube opening or a heat duct.

NOTE: A R-134a dye is available to aid in leak detection. Use only DaimlerChrysler (Mopar) approved refrigerant dye.

If a thorough leak check has been completed without indication of a leak, proceed to System Charge Level.

DIAGNOSIS AND TESTING - REFRIGERANT OIL

It is important to have the correct amount of lubricant in the A/C system to ensure proper lubrication of the compressor. Too little lubricant will result in damage to the compressor. Too much lubricant will reduce the cooling capacity of the system and consequently result in higher discharge air temperatures.

The lubricant used in the compressor is polyalkylene glycol PAG lubricant (SP-15). Only PAG refrigerant lubricant approved for use with R-134a should be used to service the system. Do not use any other lubricant. The lubricant container should be kept tightly capped until it is ready for use. Refrigerant lubricant will quickly absorb any moisture it comes in contact with.

It is not necessary to check or add lubricant unless it has been lost. Lubricant loss at the leak point will be evident by the presence of a wet, shiny surface around the leak.

HEATING & AIR CONDITIONING (Continued)

REFRIGERANT OIL LEVEL

When an air conditioning system is first assembled, all components (except the compressor) are refrigerant oil free. After the system has been charged with (R-134a) refrigerant and operated, the oil in the compressor is dispersed through the lines and components. The evaporator, condenser and receiver/drier will retain a significant amount of oil. Refer to the A/C Component Refrigerant Oil Capacities table. When a component is replaced, the specified amount of refrigerant oil must be added. When the compressor is replaced, the amount of oil that is retained in the rest of the system must be drained from the replacement compressor. When a line or component has ruptured and oil has escaped, the compressor should be removed and drained. The receiver/drier must be replaced along with the ruptured part. The oil capacity of the system, minus the amount of oil still in the remaining components, can be measured and poured into the suction port of the compressor.

Example: On an A/C system the evaporator retains 60 ml. (2 oz.). The condenser retains 30 ml. (1 oz.) of oil, and system capacity may be 150 ml. (5.00 oz.) of oil.

150 ml. minus 90 ml. equals 60 ml. (2.00 oz.).

A/C COMPONENT REFRIGERANT OIL CAPACITIES

COMPONENT NAME	ml.	oz.
Total Air Conditioning System	150 ml.	5.00 oz.
Condenser	30 ml.	1.00 oz.
Evaporator	59 ml.	2.00 oz.
Filter/Drier	30 ml.	1.00 oz.
Line Blown	44 ml.	1.50 oz.

CAUTION: The refrigerant oil used in a R-134a A/C system is unique. Use only oils which were designed to work with R-134a refrigerant. The oil designated for this vehicle is SP-15 PAG (polyalkylene glycol).

VERIFY REFRIGERANT LUBRICANT LEVEL

(1) Discharge refrigerant system using a recycling/reclaiming equipment if a charge is present.

(2) Disconnect refrigerant lines from A/C compressor. Cap the open lines to prevent moisture from entering system.

(3) Remove compressor from vehicle.

(4) From suction and discharge ports on top of compressor, drain lubricant from compressor.

(5) Add system capacity minus the capacity of components that have not been replaced. Refer to the A/C Component Refrigerant Oil Capacities chart above. Add lubricant through the suction and discharge ports on compressor. This is not to exceed 150 ml. (5.00 oz.) in total.

(6) Install compressor and connect refrigerant lines. Then evacuate and charge refrigerant system.

(7) Most reclaim/recycling equipment will measure the lubricant being removed. This is the amount of lubricant to be added back to the system. If a new compressor is being installed, drain lubricant from old compressor, measure the amount drained and discard old lubricant. Drain the lubricant from the new compressor into a clean container. Return the amount of lubricant measured from the old compressor, plus the amount reclaimed from the system back into the new compressor.

DIAGNOSIS AND TESTING - SELF DIAGNOSTICS

DIAGNOSTIC TROUBLE CODES (DTC's)

Both the Automatic Temperature Control (ATC) and the Manual Temperature Control (MTC) systems are controlled by the Body Control Module (BCM). Both systems can be diagnosed by the DRBIII® scan tool or the vehicles own control head display. Refer to the DRBIII® menu for checking Diagnostic Trouble Codes (DTC's). Note that there are three DTC tables. The ATC and MTC DTC table contain faults that are common to both the ATC and the MTC system. The same diagnosis can be used for both systems. The DTC's cover operation of the climate control unit actuators, doors, evaporator temperature sensor, ambient temperature sensor and the A/C refrigerant system. The MTC DTC table covers Fault Codes that are for the MTC Control Head and wiring and are not used on an ATC system. The ATC DTC table has DTC's for ATC Head Communications, In-Car Temperature Sensor and Sun Sensor which are not in a MTC system.

Some conditions of low battery voltage or extremely cold weather can generate a DTC for the climate control system actuators, evaporator probe, in-car temperature sensor (ATC), or ambient temperature sensor, even in a properly operating system. It is recommended that all the DTC's be checked as follows to assure a part is faulty.

Climate Control Sensor DTC Check

(1) Clear the DTC.

(2) Operate the HVAC system with the engine running for a minimum of 30 seconds.

(3) Check for DTC's.

(4) Perform diagnostics if the DTC appears again. (Refer to Appropriate Diagnostic Information)

HEATING & AIR CONDITIONING (Continued)

Climate Control Actuator Check.

(1) Clear the DTC.

(2) Perform HVAC system calibration. (Refer to 24 - HEATING & AIR CONDITIONING - STANDARD PROCEDURE - HVAC SYSTEM CALIBRATION)

(3) Perform diagnostics if the DTC appears again. (Refer to Appropriate Diagnostic Information)

If a DTC does not appear when using the procedures above, check the history of the vehicle for a low battery condition, or ambient temperatures below 40°F. Removing connections without disconnecting the battery may also generate a DTC on a good part. The battery should always be disconnected when servicing electrical parts.

ATC AND MTC DTC'S

CODE	DESCRIPTION
23	BLEND DOOR ACTUATOR FEEDBACK FAILURE
24	MODE DOOR ACTUATOR FEEDBACK FAILURE
25	AMBIENT SENSOR
31	RECIRCULATION DOOR ACTUATOR STALL FAILURE
32	BLEND DOOR ACTUATOR STALL FAILURE
33	MODE DOOR ACTUATOR STALL FAILURE
35	EVAPORATOR SENSOR FAILURE
37	BLEND DOOR ACTUATOR OUTPUT SHORTED TO BATTERY
38	BLEND DOOR ACTUATOR OUTPUT SHORTED TO GROUND
39	MODE DOOR ACTUATOR OUTPUT SHORTED TO BATTERY
40	MODE DOOR ACTUATOR OUTPUT SHORTED TO GROUND
41	RECIRCULATION DOOR ACTUATOR OUPUT SHORTED TO BATTERY
42	RECIRCULATION DOOR ACTUATOR OUTPUT SHORTED TO GROUND
43	COMMON DOOR OUTPUT SHORTED TO BATTERY
44	COMMON DOOR OUTPUT SHORTED TO GROUND
51	SYSTEM VOLTAGE TOO LOW FOR DOOR CALIBRATION

MTC DTC'S

CODE	DESCRIPTION
45	A/C CONTROL BLEND DOOR INPUT OPEN OR SHORTED TO GROUND
46	A/C CONTROL BLEND DOOR SHORTED TO BATTERY
47	A/C CONTROL - A/C SWITCH FAILURE
48	A/C CONTROL MODE DOOR INPUT SHORTED TO GROUND
49	A/C CONTROL MODE DOOR INPUT SHORTED TO BATTERY
50	A/C CONTROL ELECTRIC BACKLITE (EBL) SWITCH FAILURE

ATC DTC'S

CODE	DESCRIPTION
26	ATC IN-CAR TEMPERATURE THERMISTER FAILURE
27	ATC IN-CAR SENSOR FAILURE
34	ENGINE TEMPERATURE MESSAGE NOT RECEIVED
36	ATC CONTROL COMMUNICATION FAILURE

TROUBLE CODES FROM THE ATC HEAD

The trouble codes can be checked with the ATC control if a DRBIII® scan tool is not available. The control head can only be placed into the diagnostic mode while the engine is running and the vehicle is not moving. Set the control to a 75º F setting (so there is no confusion with the 23-51 Diagnostic Trouble Codes (DTC's) (Fig. 1).

To place the system into it's diagnostic mode, press and hold the Floor, Mix and Defrost buttons (at the same time). The ATC head display will begin to blink. Release the Floor, Mix and Defrost buttons. Once the control head enters the diagnostic mode, the display on the control head will continue to blink. This occurs until it completes its tests and climate control unit door/actuator calibrations. Then it will display any diagnostic trouble codes that are present in the BCM. If there are no diagnostic trouble codes, the system will return to its normal operation as indicated by the temperature symbol (C or F). Diagnostic trouble codes related to the ATC and climate control unit will appear on the display in numerical form. The diagnostic trouble codes are stored in the BCM and can range between 23 and 51. The ATC control can only show one diagnostic trouble code at a time. Under certain circumstances, more than one diagnostic trouble code could be in the memory. To

HEATING & AIR CONDITIONING (Continued)

scroll through any additional diagnostic trouble codes, press the Panel Mode button on the ATC control. **It is important that no other knob or button is pushed until all codes are read. Pushing any button except Panel Mode or turning a knob will end the diagnostic test without showing the rest of the trouble codes. There also may be other trouble codes stored in the BCM not related to the Climate Control System. These codes can only be found using the DRBIII® scan tool.**

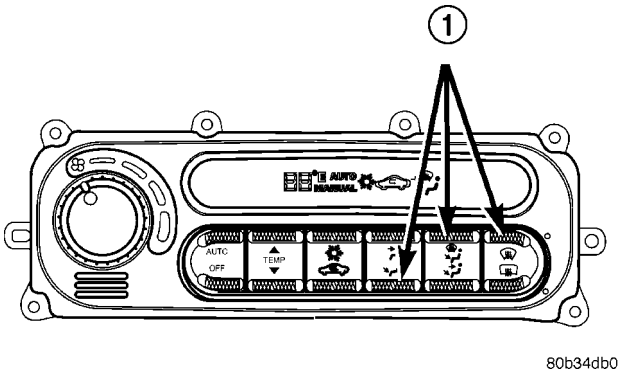

Fig. 1 ENTERING SELF-DIAGNOSTIC MODE

1 - PRESS BUTTONS SIMULTANEOUSLY

TROUBLE CODES FROM THE MTC HEAD

The trouble codes can be checked with the MTC head and the Odometer Display of the Mechanical Instrument Cluster if a DRBIII® scan tool is not available. The MTC Head can only be placed into the diagnostic mode while the engine is running and the vehicle is not moving. To place the system into it's diagnostic mode, adjust the MTC to the following settings: (Fig. 2)

(1) The engine must be running with vehicle not moving.

(2) The Fan Speed set to any speed except OFF.

(3) The Temperature Knob in full cold (full counterclockwise position).

(4) The mode knob must be placed in defrost position (full clockwise position).

(5) The A/C button can be ON or OFF.

(6) Press and hold the EBL button until the Mechanical Instrument Cluster Odometer display indicates an "AC00". The body control module (BCM) will chime once and the MTC A/C button LED will begin blinking.

(7) Release the EBL button and wait until the MTC A/C button LED stops blinking. This means that the error check and climate control unit door calibration is complete.

Diagnostic trouble codes related to the MTC head and the climate control unit will appear on the odometer display in numerical form after the letters "AC". The diagnostic trouble codes are stored in the BCM

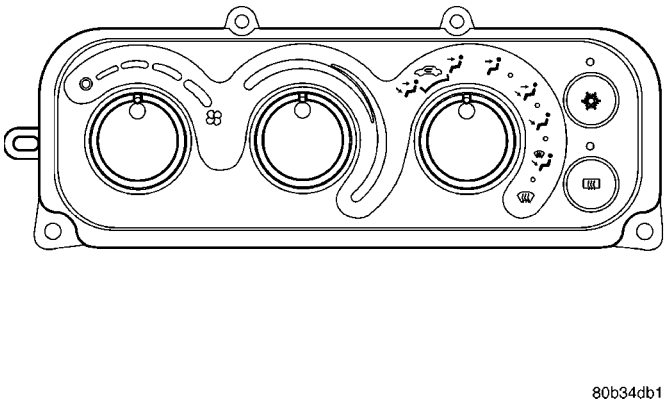

Fig. 2 MTC CONTROL HEAD

and can range between 23 and 51. The odometer display will return to normal operation if no trouble codes are found. If a problem is found, then the odometer will display the letters "A/C" followed by the trouble code number. The odometer display can only show one diagnostic trouble code at a time. Under certain circumstances, more than one diagnostic trouble code could be in the memory. To scroll through any additional diagnostic trouble codes, press the A/C button on the MTC head. The BCM will beep each time the A/C button is pushed. Continue pushing the A/C button and recording the trouble code numbers until the odometer returns to normal operation (note the letters AC will disappear). **It is important that no other knob or button is pushed until all codes are read. Pushing any button except the A/C button or turning a knob will end the diagnostic test without showing the rest of the trouble codes. There also may be other trouble codes stored in the BCM not related to the Climate Control System. These codes can only be found using the DRBIII® scan tool.**

ERASING DIAGNOSTIC TROUBLE CODES (DTC's)

Diagnostic trouble codes can be cleared from the memory two ways:

- The DRBIII® scan tool
- Power to the BCM can be disconnected for ten minutes by disconnecting the battery negative remote cable.

If the scan tool is to be used, refer to the Appropriate Diagnostic Information.

CAUTION: Fault code 26 can be created if the in-car sensor thermistor is disconnected while the BCM is operating. This can happen by disconnecting connectors from the BCM or the ATC Control Head when the battery is connected (even if the ignition switch is OFF). To correct, clear the fault code 26 from the BCM.

HEATING & AIR CONDITIONING (Continued)

STANDARD PROCEDURE

STANDARD PROCEDURE - TUBING AND FITTINGS

Kinks in the refrigerant tubing or sharp bends in the refrigerant hose lines will greatly reduce the capacity of the entire system. High pressures are produced in the system when it is operating. Extreme care must be exercised to make sure that all connections are pressure tight. Dirt and moisture can enter the system when it is opened for repair or replacement of lines or components. The refrigerant oil will absorb moisture readily out of the air. This moisture will convert into acids within a closed system.

CAUTION: The system must be completely empty before opening any fitting or connection in the refrigeration system. Open fittings with caution even after the system has been emptied. If any pressure is noticed as a fitting is loosened, retighten fitting and evacuate the system again.

A good rule for the flexible hose lines is to keep the radius of all bends at least 10 times the diameter of the hose. Sharper bends will reduce the flow of refrigerant. The flexible hose lines should be routed so they are at least 3 inches (80 mm) from the exhaust manifold. Inspect all flexible hose lines to make sure they are in good condition and properly routed.

The use of correct wrenches when making connections is very important. Improper wrenches or improper use of wrenches can damage the fittings.

The internal parts of the A/C system will remain stable as long as moisture-free refrigerant and refrigerant oil is used. Abnormal amounts of dirt, moisture or air can upset the chemical stability. This may cause operational troubles or even serious damage if present in more than very small quantities.

When opening a refrigeration system, have everything you will need to repair the system ready. This will minimize the amount of time the system must be opened. Cap or plug all lines and fittings as soon as they are opened. This will help prevent the entrance of dirt and moisture. All new lines and components should be capped or sealed until they are ready to be used.

All tools, including the refrigerant dispensing manifold, the manifold gauge set, and test hoses should be kept clean and dry.

STANDARD PROCEDURE - REFRIGERANT EQUIPMENT

This vehicle uses R-134a refrigerant. It is a non-toxic, non-flammable, clear colorless liquefied gas. R-134a refrigerant is not compatible with R-12 refrigerant. Even a small amount of R-12 in a R-134a system could cause refrigerant oil sludging and poor performance.

Service ports for the air conditioning system are located on the hoses. Service ports have been designed to ensure that the system is not accidentally filled with the wrong refrigerant (R-12).

CAUTION: Never add R-12 to a system designed to use R-134a. System failure will occur. Only use gauges that have not been used for R-12.

When servicing a system, the air conditioning charging/recovery/recycling machine must be used (Fig. 3). Contact an automotive service equipment supplier for proper equipment. Refer to the operating instructions provided with the equipment for proper operation.

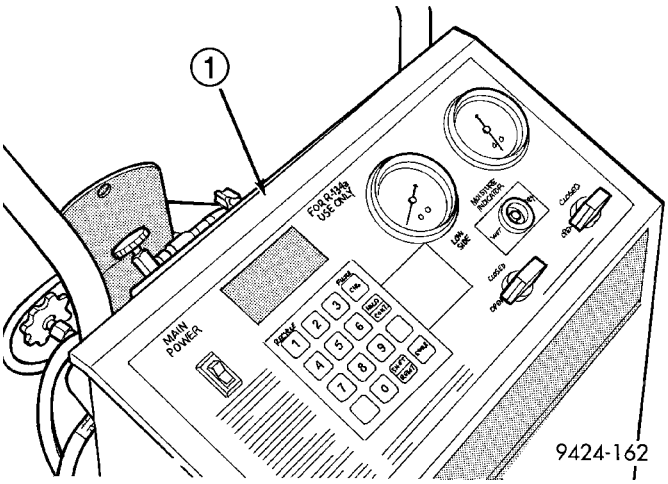

Fig. 3 Refrigerant Recovery/Recycling Station - Typical

1 - R-134 REFRIGERANT RECOVERY MACHINE

HEATING & AIR CONDITIONING (Continued)

A R-134a gauge set (Fig. 4) must be used in conjunction with the charging/recovery/recycling device. The service hoses on the gauge set should have automatic back flow valves at the service port connector ends. This will prevent refrigerant R-134a from being released into the atmosphere.

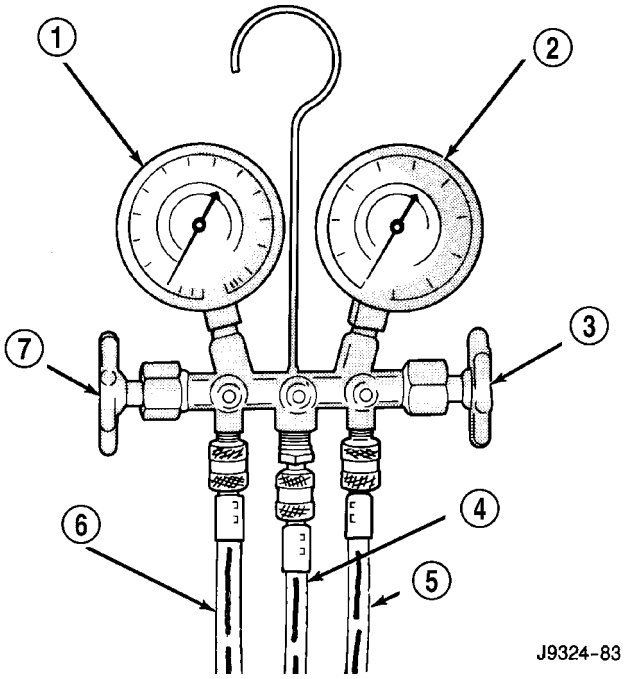

Fig. 4 Manifold Gauge Set - Typical

1 - LOW PRESSURE GAUGE
2 - HIGH PRESSURE GAUGE
3 - VALVE
4 - VACUUM/REFRIGERANT HOSE (YELLOW W/BLACK STRIP)
5 - HIGH PRESSURE HOSE (RED W/BLACK STRIP)
6 - LOW PRESSURE HOSE (BLUE W/BLACK STRIP)
7 - VALVE

R-134a refrigerant requires a special type of compressor oil. When adding oil, make sure that it is designed to be used in a R-134a system. Refer to the label under the hood for proper oil and refrigerant charge levels (Fig. 5).

Fig. 5 Underhood Label

The use of R-134a will have a positive environmental impact due to it's zero ozone depletion and low global warming impact.

STANDARD PROCEDURE - SYSTEM CHARGE LEVEL

The procedure below should be used to check and/or fill the refrigerant charge in the air conditioning system.

NOTE: The maximum amount of R-134a refrigerant that the air conditioning system holds is listed on the underhood label.

To verify proper charge level, evacuate (reclaim) and recharge system to the proper refrigerant level.

STANDARD PROCEDURE - CHARGING A/C SYSTEM

PARTIAL CHARGE

This vehicle does not have a sight glass. It is not possible to determine the amount of R-134a charge in the system. Therefore it is necessary to completely evacuate and recover the system, and then recharge the system fully.

EVACUATION

Before adding refrigerant, all air must be evacuated from the system.

- Connect a manifold gauge set to the A/C service ports.
- Use a vacuum pump or charging station and evacuate system to 95 kPa (28 inches Hg) for 30 minutes.
- Go to Charging A/C System below.

CHARGING A/C SYSTEM

The procedure below should be used to fill the refrigerant charge in the air conditioning system. This A/C system does not have or use a sight glass to check or charge the system.

WARNING: AVOID BREATHING A/C REFRIGERANT AND LUBRICANT VAPOR OR MIST. EXPOSURE MAY IRRITATE EYES, NOSE AND THROAT. USE ONLY APPROVED SERVICE EQUIPMENT MEETING SAE REQUIREMENTS TO DISCHARGE R-134a SYSTEM. IF ACCIDENTAL SYSTEM DISCHARGE OCCURS, VENTILATE WORK AREA BEFORE RESUMING SERVICE.R-134a SERVICE EQUIPMENT OR VEHICLE A/C SYSTEM SHOULD NOT BE PRESSURE TESTED OR LEAK TESTED WITH COMPRESSED AIR. MIXTURE OF AIR and R-134a CAN BE COMBUSTIBLE AT ELEVATED PRESSURES. THESE MIXTURES ARE POTENTIALLY DANGEROUS AND MAY RESULT IN FIRE OR EXPLOSION CAUSING INJURY OR PROPERTY DAMAGE.

HEATING & AIR CONDITIONING (Continued)

CAUTION: Do not overcharge refrigerant system, as excessive compressor head pressure can cause noise and system failure.

After system has been tested for leaks and evacuated, a refrigerant (R-134a) charge can be injected into the system.

NOTE: When connecting service equipment coupling to the line fitting, verify that the valve of the coupling is fully closed. This will reduce the amount of effort required to make the connection.

(1) If using a separate vacuum pump close all valves before disconnecting pump. Connect manifold gauge set to the A/C service ports.

(2) Measure refrigerant (refer to capacities). Refer to the instructions provided with the equipment being used.

(3) Verify engine is shut off. Open suction and discharge valves. Open the charge valve to allow the refrigerant to flow into the system. When transfer of refrigerant has stopped, close the suction and discharge valve.

(4) If all of the charge did not transfer from the dispensing device, put vehicle controls into the following mode:

- Automatic transaxle in park or manual transaxle in neutral
- Engine idling at 700 rpm
- A/C control set in 100 percent outside air
- Panel mode
- Blower motor ON high speed
- Vehicle windows closed

If A/C compressor does not engage, test compressor clutch control circuit and correct any failure. Refer to Electrical Wiring Diagrams.

(5) Open the suction valve to allow the remaining refrigerant to transfer to the system.

WARNING: DO NOT OPEN THE DISCHARGE (HIGH-PRESSURE) VALVE AT THIS TIME.

(6) Close all valves and test the A/C system performance.

(7) Disconnect the charging station or manifold gauge set. Install the service port caps.

STANDARD PROCEDURE - EVACUATING A/C SYSTEM

NOTE: Moisture must be prevented from entering the A/C oil. Moisture in the oil is very difficult to remove and will cause a reliability problem with the compressor.

If a compressor is left open to the atmosphere for an extended period of time, the refrigerant oil should be drained and replaced. This will eliminate the possibility of contaminating the refrigerant system.

If refrigerant system has been open to the atmosphere, it must be evacuated before the system can be charged. Moisture and air mixed with the refrigerant will raise the compressor head pressure above acceptable operating levels. This will reduce the performance of the system and damage the compressor.

EVACUATE A/C SYSTEM

NOTE: When connecting the service equipment coupling to the line fitting, verify the valve of the coupling is fully closed. This will reduce the amount of effort required to make the connection.

(1) Connect a suitable charging station, refrigerant recovery machine and a manifold gauge set with vacuum pump.

(2) Open suction and discharge valves and start vacuum pump. The vacuum pump should run a minimum of 45 minutes to eliminate all moisture in system. When suction gauge reads -88 kPa (- 26 in. Hg) vacuum or greater for 45 minutes, close all valves and turn off vacuum pump. If the system fails to reach specified vacuum, the system likely has a leak that must be corrected. If the refrigerant system maintains specified vacuum for at least 30 minutes, start the vacuum pump, open the suction and discharge valves. Then evacuate the system an additional 10 minutes.

(3) Close all valves, turn off and disconnect the vacuum pump.

(4) The refrigerant system is now ready to be charged with refrigerant.

STANDARD PROCEDURE- REFRIGERANT RECOVERY

WARNING: (Refer to 24 - HEATING & AIR CONDITIONING/PLUMBING - WARNING) AND (Refer to 24 - HEATING & AIR CONDITIONING/PLUMBING - CAUTION) BEFORE PERFORMING THE FOLLOWING OPERATION.

A R-134a refrigerant recovery/recycling/charging station that meets SAE Standard J2210 must be used to recover the refrigerant from an R-134a refrigerant system. Refer to the operating instructions supplied by the equipment manufacturer for the proper care and use of this equipment.

HEATING & AIR CONDITIONING (Continued)

SPECIFICATIONS

AIR CONDITIONING

ITEM	DESCRIPTION	NOTES
SYSTEM	R134a w/expansion valve	
COMPRESSOR	Visteon compressor model HS15 (piston type)	PAG Oil (refer to under hood sticker for specific oil required)
Freeze–up Control	Evaporator temp probe (2-wire)	BCM input, signals OFF < 33.7° F, ON > 35.7° F (Note: will vary depending on the ambient temperature.)
Low psi Control	Pressure transducer to PCM	Opens < 29.4 psi
High psi Control		Opens > 431 psi
Thermal Limiter Switch	Cut Out > 252-262° F, cut In < 225-235° F	Scroll compressors only serviced with clutch
Forced Recirc Mode	Sustem forced into Recirc at high pressures	BCB steps HVAC into recirc at 375 psi, steps out at 325 psi
CONTROL HEAD	Manual type	Resistive multiplex signal for A/C request to BCM
Mode Door	Electric actuator w/feedback	BCM controlled
Blend Air Door	Electric actuator w/feedback	BCM controlled
Fresh/Recirc door	Electric actuator w/feedback	BCM controlled
Blower Motor	Refer to Diagnostics Manual for wiring schematics..	Resistor card.
COOLING FANS	PCM controlled module, two fan motors - low/high	Low & high relays
CLUTCH		
Control	Relay	PCM
Draw	2-4.15 amps @ 12V	± 0.5V
Gap	0.013″-0.025″	

A/C APPLICATION TABLE-ATC

Item	Description	Notes
Vehicle	JR	Automatic Temperature Control (ATC)
System	R134a w/expansion valve	
Compressor	Nippondenso 10PA17	ND-8 PAG oil
Freeze-up Control	2-wire evaporator temp sensor	BCM controlled, clutch OFF < 33° F, resets > 37° F
Low psi Control	A/C pressure transducer, line mounted	opens < 29.4 psi PCM input
High psi Control		opens > 431.0 psi PCM input
Forced Recirc Mode	System forced into Recirc at high pressures	BCM steps HVAC into recirc at 375 psi, steps out at 325 psi
Control head	Automatic ATC type	Programmable Communication Interface (PCI)
Mode Door	Electric actuator	BCM controlled actuators use a common ground
Blend Door	Electric actuator	
Recirculation Door	Electric actuator	
Blower Motor	Controlled via a linear blower controller	Uses pulse width modulation input
Cooling Fans	2 fans, low speed and high speed	PCM controlled fan module via 2 relays
Clutch		
Control	Relay	PCM
Draw	2.2 amps @ 12 V ±0.5V	
Gap	0.014″ - 0.026″	
DRB III®		
Reads	TPS, RPM, A/C switch test	
Actuators	Mode doors, clutch and fan relays	

CONTROLS

TABLE OF CONTENTS

page

A/C COMPRESSOR CLUTCH
DESCRIPTION 13
OPERATION 13
REMOVAL 13
INSTALLATION 15
A/C COMPRESSOR CLUTCH COIL
DESCRIPTION 16
OPERATION 16
DIAGNOSIS AND TESTING - COMPRESSOR CLUTCH COIL 16
A/C COMPRESSOR CLUTCH RELAY
DESCRIPTION 16
OPERATION 16
DIAGNOSIS AND TESTING - A/C COMPRESSOR CLUTCH RELAY 16
REMOVAL 17
INSTALLATION 17
A/C HEATER CONTROL
REMOVAL 17
INSTALLATION 18
A/C HEATER CONTROL - MTC
DIAGNOSIS AND TESTING - A/C HEATER CONTROL 18
REMOVAL 18
INSTALLATION 19
A/C PRESSURE TRANSDUCER
DESCRIPTION 19
OPERATION 19
REMOVAL 19
INSTALLATION 19
EVAPORATOR TEMPERATURE SENSOR
DESCRIPTION 19
OPERATION 20
REMOVAL 20
INSTALLATION 20
IN-CAR TEMPERATURE SENSOR
DESCRIPTION 21
OPERATION 21
DIAGNOSIS AND TESTING - IN-CAR SENSOR ASPIRATOR MOTOR 21
REMOVAL 22
SUN SENSOR
DESCRIPTION 22
OPERATION 22
DIAGNOSIS AND TESTING - SUN SENSOR . . . 22
REMOVAL 23
INSTALLATION 23
AMBIENT TEMP SENSOR
DESCRIPTION 23
OPERATION 23
REMOVAL 23
INSTALLATION 23
BLEND DOOR ACTUATOR
DESCRIPTION 24
OPERATION 24
REMOVAL 24
INSTALLATION 24
MODE DOOR ACTUATOR
DESCRIPTION 24
OPERATION 24
REMOVAL 25
INSTALLATION 25
RECIRCULATION DOOR ACTUATOR
DESCRIPTION 25
OPERATION 25
REMOVAL 26
INSTALLATION 26
BLOWER MOTOR RESISTOR
DESCRIPTION 26
OPERATION 26
DIAGNOSIS AND TESTING-BLOWER MOTOR RESISTOR 26
REMOVAL 27
INSTALLATION 27
THERMAL LIMITER SWITCH
DESCRIPTION 27
OPERATION 27
DIAGNOSIS AND TESTING - THERMAL LIMITER SWITCH 27
POWER MODULE
DESCRIPTION 28
OPERATION 28
REMOVAL 28
INSTALLATION 28

A/C COMPRESSOR CLUTCH

DESCRIPTION

The compressor clutch components provide a way to drive the compressor. The compressor clutch assembly consists of a stationary electromagnetic coil, hub bearing and pulley assembly and a clutch plate. The compressor clutch and coil assembly are the only serviced parts on the compressor.

OPERATION

When clutch engages the compressor is then driven by the engine serpentine drive belt. The clutch engagement is controlled the heater-A/C mode control switch, a/c pressure transducer, evaporator probe, thermal limiter switch, compressor clutch relay and Powertrain Control Module (PCM).

REMOVAL

NOTE: Refrigerant does not have to be reclaimed for compressor clutch, pulley or coil replacement. The compressor clutch can be serviced in the vehicle.

(1) Disconnect and isolate negative battery cable.

(2) Remove serpentine drive belt (Refer to 7 - COOLING/ACCESSORY DRIVE/DRIVE BELTS - REMOVAL) or (Refer to 7 - COOLING/ACCESSORY DRIVE/DRIVE BELTS - REMOVAL).

(3) Unplug the compressor clutch coil wire harness connector.

(4) Remove three compressor mounting bolts.

(5) Remove compressor from mounting bracket and support compressor while servicing the clutch.

(6) Insert two pins of the Spanner Wrench (kit # 6460 or equivalent) into the holes of the clutch plate. Hold the clutch plate stationary and remove nut.

(7) Remove clutch plate with a Puller (6461 or equivalent) (Fig. 1).

(8) Remove compressor clutch shims.

(9) Remove external front housing snap ring with snap ring pliers (Fig. 2).

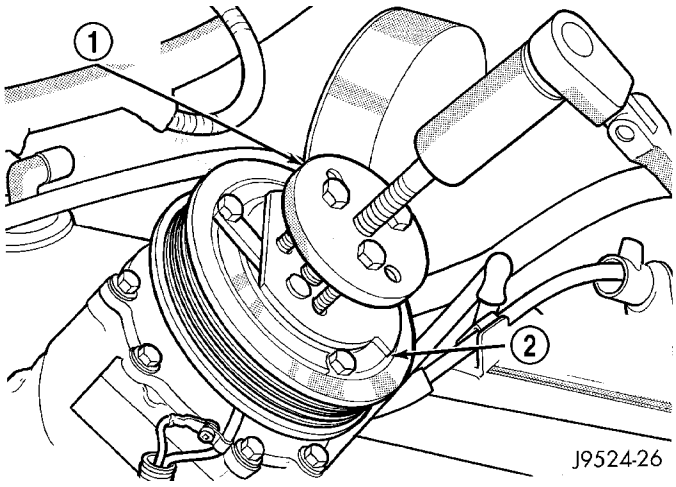

Fig. 1 Clutch Plate

1 - CLUTCH PLATE PULLER
2 - CLUTCH PLATE

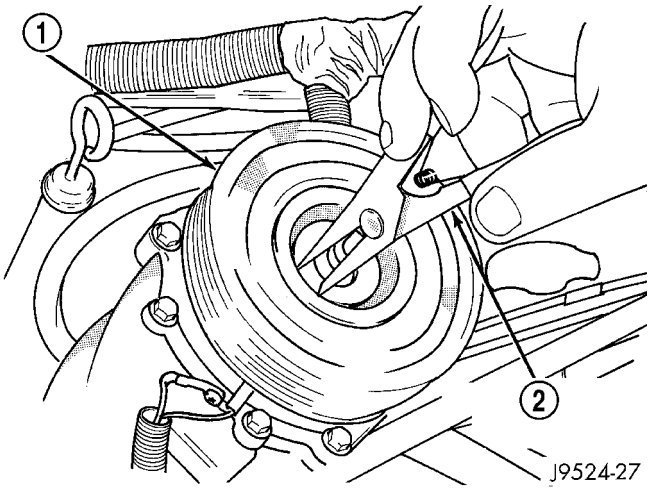

Fig. 2 External Snap Ring

1 - PULLEY
2 - SNAP RING PLIERS

A/C COMPRESSOR CLUTCH (Continued)

(10) Install lip of the Rotor Puller (6141-1 or equivalent) into the external snap ring groove and install Shaft Protector (6141-2 or equivalent) (Fig. 3).

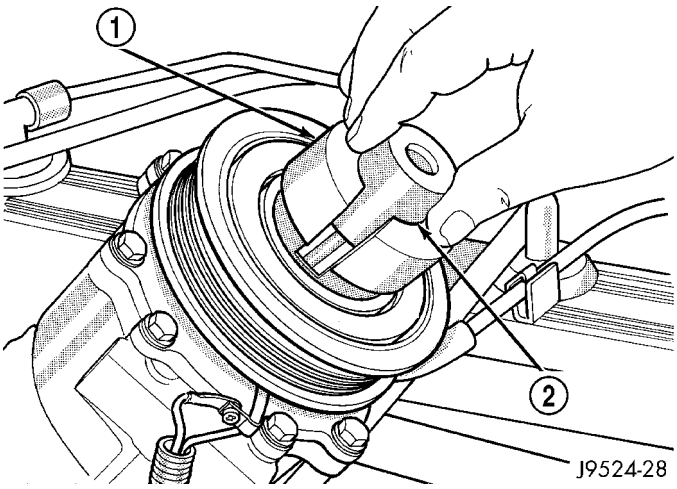

Fig. 3 Shaft Protector and Puller

1 - PULLER JAW
2 - SHAFT PROTECTOR

(11) Install Puller Bolts (6461 or equivalent) through the puller flange and into the jaws of the rotor puller and tighten (Fig. 4). Turn the puller center bolt clockwise until the rotor pulley is free.

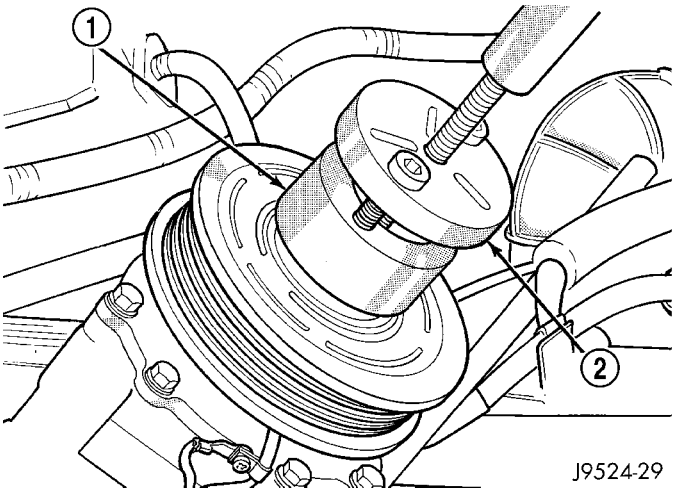

Fig. 4 Puller Plate

1 - PULLER JAW
2 - PULLER

(12) Remove screw and retainer from clutch coil wire harness on the front of the compressor (Fig. 5).

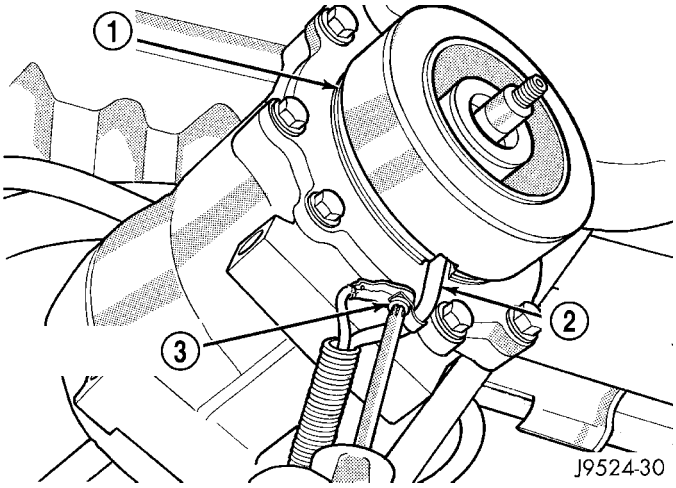

Fig. 5 Clutch Coil Lead Wire Harness

1 - COIL
2 - COIL WIRE
3 - RETAINER SCREW

(13) Remove snap ring from compressor hub and remove clutch field coil (Fig. 6). Slide clutch field coil off of the compressor hub.

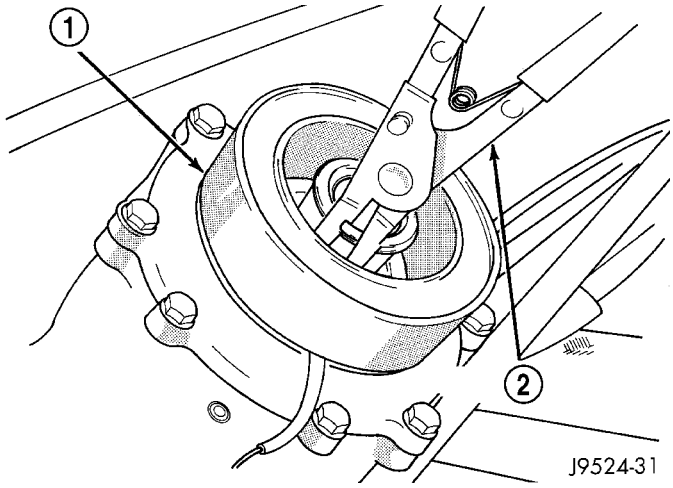

Fig. 6 Clutch Field Coil Snap Ring

1 - COIL
2 - SNAP RING PLIERS

A/C COMPRESSOR CLUTCH (Continued)

INSTALLATION

(1) Install clutch field coil and snap ring.

(2) Install clutch coil wire harness retaining clip on the front of the compressor and tighten the screw.

(3) Align rotor assembly squarely on the front compressor housing hub.

(4) Install pulley bearing assembly with Installer (6871 or equalvent) (Fig. 7). Thread installer on the shaft, then turn the nut until the pulley assembly is seated.

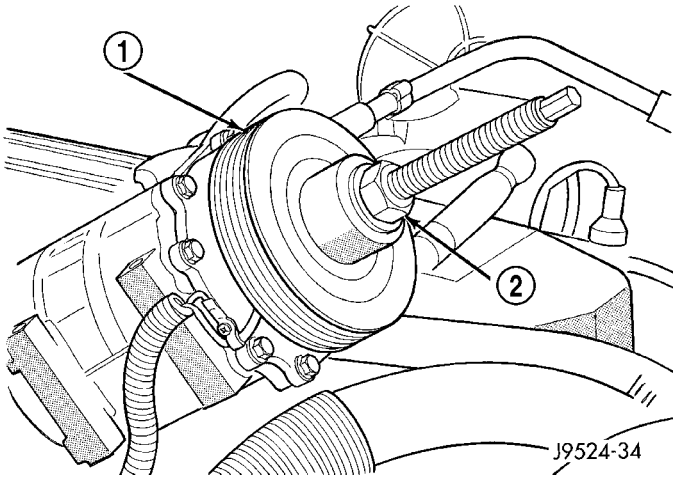

Fig. 7 Clutch Pulley Install

1 - PULLEY BEARING ASSEMBLY
2 - INSTALLER

(5) Install external snap ring with the bevel side of the snap ring facing outward. Verify snap ring is seated.

CAUTION: If snap ring is not seated in the groove it will vibrate out and cause clutch failure and severe compressor damage will occur.

(6) Install compressor with the **original** clutch shims on the compressor shaft.

(7) Install clutch plate with Driver (6463 or equalivent) (Fig. 8). Install the shaft nut and tighten to 14.4 N·m (10.5 ft. lbs.).

(8) Check clutch air gap with a feeler gauge (Fig. 9). If air gap does not meet specification 0.41 - 0.79 mm (0.016 - 0.031 in.) add or subtract shims as required.

NOTE: If air gap is not consistent around the clutch, lightly pry up at the minimum variations and lightly tap down at the maximum variation point.

NOTE: When installing a new clutch onto a compressor that previously did not have a clutch, use the shims 1.0, 0.50, and 0.13 mm (0.040, 0.020, and 0.005 in.) provided with the new clutch.

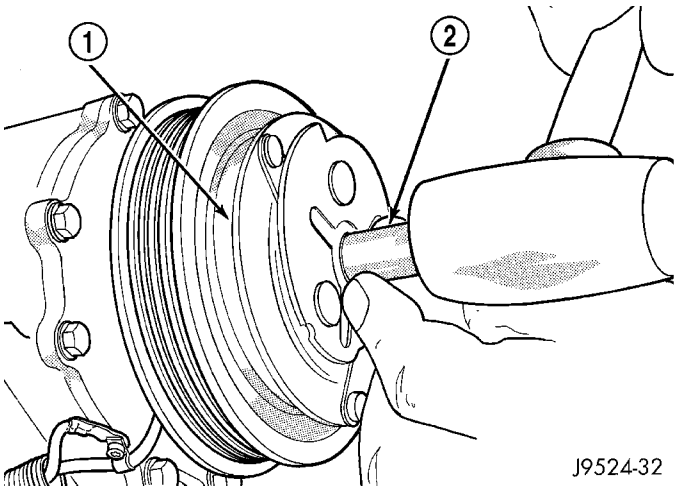

Fig. 8 Clutch Plate Driver

1 - CLUTCH PLATE
2 - DRIVER

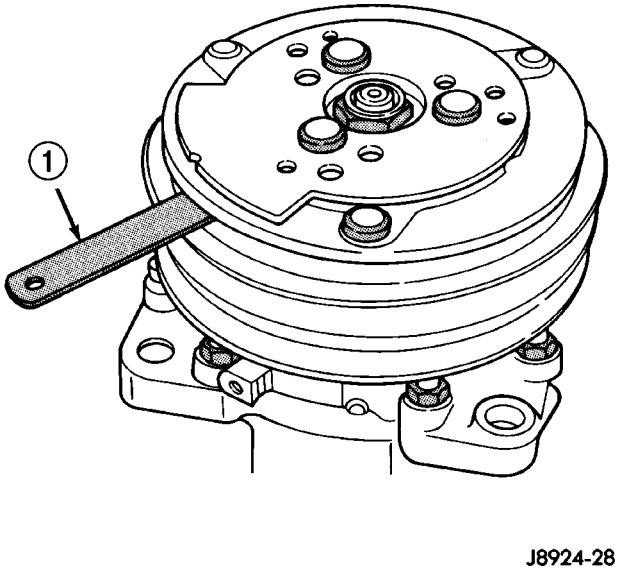

Fig. 9 Check Clutch Air Gap

1 - FEELER GAUGE

(9) Position compressor on the mounting bracket and install bolts. Tighten bolts to 41 N·m (30 ft. lbs.).

(10) Plug in compressor clutch harness.

(11) Install serpentine drive belt(Refer to 7 - COOLING/ACCESSORY DRIVE/DRIVE BELTS - INSTALLATION) or (Refer to 7 - COOLING/ACCESSORY DRIVE/DRIVE BELTS - INSTALLATION).

(12) Install Negative battery cable.

(13) Start engine, set system to A/C mode, run engine at 1500-2000 rpm, and blower speed on high. Cycle the **new** A/C clutch 20 times (5 seconds ON and 5 seconds OFF).

A/C COMPRESSOR CLUTCH (Continued)

NOTE: This procedure will seat (burnishing) friction surfaces and provide a higher clutch torque capability. This is only necessary on a NEW clutch.

A/C COMPRESSOR CLUTCH COIL

DESCRIPTION

The compressor clutch coil is electromagnetic and provides a way to engage the compressor clutch plate. The electromagnetic coil unit, hub bearing and pulley assembly are retained on the compressor front housing with snap rings. The compressor clutch and coil assembly are the only serviced parts on the compressor.

OPERATION

The coil is controlled by the heater-A/C mode control switch, a/c pressure transducer, evaporator probe, thermal limiter switch, compressor clutch relay and Powertrain Control Module (PCM). When the clutch coil is energized, it magnetically draws the clutch plate into contact with the pulley. When the coil is not energized the pulley freewheels on the clutch hub bearing, which is part of the pulley.

DIAGNOSIS AND TESTING - COMPRESSOR CLUTCH COIL

(1) Verify battery state of charge.

(2) Connect an ammeter (0-10 ampere scale) in series with the clutch coil terminal. Use a volt meter (0-20 volt scale) with clip leads measuring voltage across the battery and A/C clutch.

(3) With A/C control in A/C mode and blower at low speed, start the engine and run at normal idle.

(4) The A/C clutch should engage immediately and the clutch voltage should be within 2 volts of the battery voltage. If the A/C clutch does not engage, test the fusible link.

(5) The A/C clutch coil is acceptable if the current draw is 2.0 to 4.15 amperes at 11.5 to 12.5 volts at clutch coil. This is with the work area temperature at 21°C (70°F). If voltage is more than 12.5 volts, add electrical loads by turning on electrical accessories until voltage reads below 12.5 volts.

(6) If coil current reads zero, the coil is open and should be replaced. If the ammeter reading is 5 amperes or more, the coil is shorted and should be replaced. If the coil voltage is not within two volts of the battery voltage, test clutch coil feed circuit for excessive voltage drop.

A/C COMPRESSOR CLUTCH RELAY

DESCRIPTION

The compressor clutch relay is a International Standards Organization (ISO) micro-relay. The terminal designations and functions are the same as a conventional ISO relay. However, the micro-relay terminal orientation (footprint) is different, the current capacity is lower, and the relay case dimensions are smaller than those of the conventional ISO relay.

The compressor clutch relay is located in the Power Distribution Center (PDC) in the engine compartment. Refer to the PDC label for relay identification and location.

OPERATION

The a/c compressor clutch relay is a electromechanical device that switches battery current to the a/c compressor clutch coil when the Powertrain Control Module (PCM) grounds the coil side of the relay. The PCM responds to inputs from the Body Control Module (BCM) and the a/c pressure transducer.

The compressor clutch relay cannot be repaired and, if faulty or damaged, it must be replaced.

DIAGNOSIS AND TESTING - A/C COMPRESSOR CLUTCH RELAY

RELAY TEST

The compressor clutch relay (Fig. 10) is located in the Power Distribution Center (PDC). Refer to the PDC label for relay identification and location. Remove the relay from the PDC to perform the following tests:

(1) A relay in the de-energized position should have continuity between terminals 87A and 30, and no continuity between terminals 87 and 30. If OK, go to Step 2. If not OK, replace the faulty relay.

(2) Resistance between terminals 85 and 86 (electromagnet) should be 75 ± 5 ohms. If OK, go to Step 3. If not OK, replace the faulty relay.

(3) Connect a battery to terminals 85 and 86. There should now be continuity between terminals 30 and 87, and no continuity between terminals 87A and 30. If OK, see Relay Circuit Test in the Diagnosis and Testing section of this group. If not OK, replace the faulty relay.

RELAY CIRCUIT TEST

For circuit descriptions and diagrams, (Refer to Appropriate Wiring Information).

(1) The relay common feed terminal cavity (30) is connected to fused battery feed. There should be battery voltage at the cavity for relay terminal 30 at all

A/C COMPRESSOR CLUTCH RELAY (Continued)

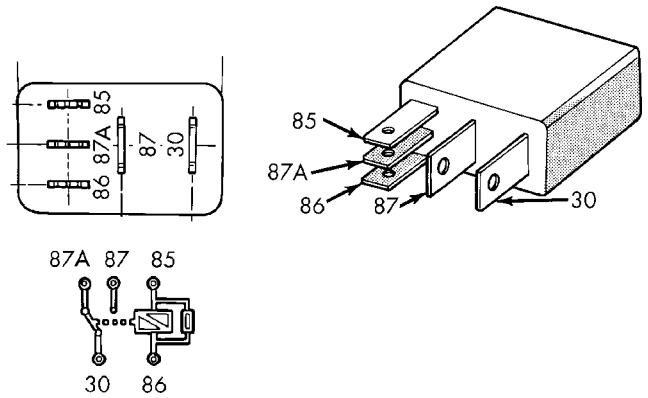

Fig. 10 A/C COMPRESSOR CLUTCH RELAY

30 - COMMON FEED
85 - COIL GROUND
86 - COIL BATTERY
87 - NORMALLY OPEN
87A - NORMALLY CLOSED

times. If OK, go to Step 2. If not OK, repair the open circuit to the fuse in the PDC as required.

(2) The relay normally closed terminal (87A) is not used in this application. Go to Step 3.

(3) The relay normally open terminal cavity (87) is connected to the compressor clutch coil. There should be continuity between this cavity and the A/C compressor clutch relay output circuit cavity of the compressor clutch coil wire harness connector. If OK, go to Step 4. If not OK, repair the open circuit as required.

(4) The relay coil battery terminal (86) is connected to the fused ignition switch output (run/start) circuit. There should be battery voltage at the cavity for relay terminal 86 with the ignition switch in the On position. If OK, go to Step 5. If not OK, repair the open circuit to the fuse in the junction block as required.

(5) The coil ground terminal cavity (85) is switched to ground through the Powertrain Control Module (PCM). There should be continuity between this cavity and the A/C compressor clutch relay control circuit cavity of the PCM (pin 64). If not OK, repair the open circuit as required.

REMOVAL

(1) Disconnect and isolate the battery negative cable.

(2) Remove the cover from the Power Distribution Center (PDC).

(3) Refer to the label on the PDC for compressor clutch relay identification and location.

(4) Unplug compressor clutch relay from the PDC.

INSTALLATION

(1) Install the compressor clutch relay by aligning the relay terminals with the cavities in the PDC and pushing the relay firmly into place.

(2) Install the PDC cover.

(3) Connect the battery negative cable.

(4) Test the relay operation.

A/C HEATER CONTROL

REMOVAL

WARNING: ON VEHICLES EQUIPPED WITH AIRBAGS, DISABLE THE AIRBAG SYSTEM BEFORE ATTEMPTING ANY STEERING WHEEL, STEERING COLUMN, OR INSTRUMENT PANEL COMPONENT DIAGNOSIS OR SERVICE. DISCONNECT AND ISOLATE THE BATTERY NEGATIVE (GROUND) CABLE, THEN WAIT TWO MINUTES FOR THE AIRBAG SYSTEM CAPACITOR TO DISCHARGE BEFORE PERFORMING FURTHER DIAGNOSIS OR SERVICE. THIS IS THE ONLY SURE WAY TO DISABLE THE AIRBAG SYSTEM. FAILURE TO TAKE THE PROPER PRECAUTIONS COULD RESULT IN AN ACCIDENTAL AIRBAG DEPLOYMENT AND POSSIBLE PERSONAL INJURY.

(1) Open hood and disconnect the negative battery cable remote terminal from the remote battery post.

(2) Remove the ash receiver assembly, if necessary.

(3) Remove the instrument panel center trim bezel and remove the two electrical connectors from the back of the control head and traction control switch (if equipped) (Fig. 11) and (Fig. 12).

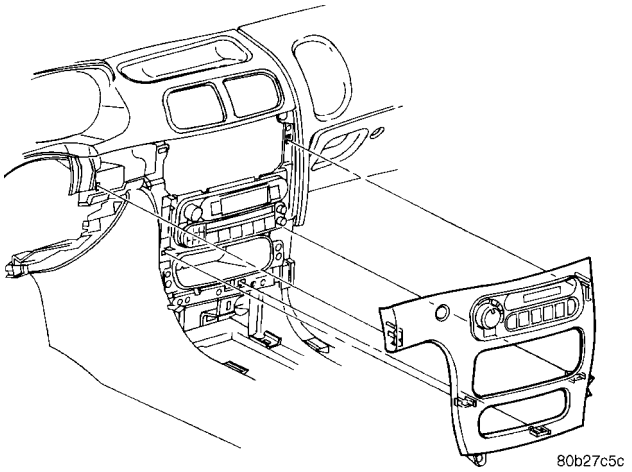

Fig. 11 INSTRUMENT PANEL CENTER TRIM BEZEL REMOVE/INSTALL

A/C HEATER CONTROL (Continued)

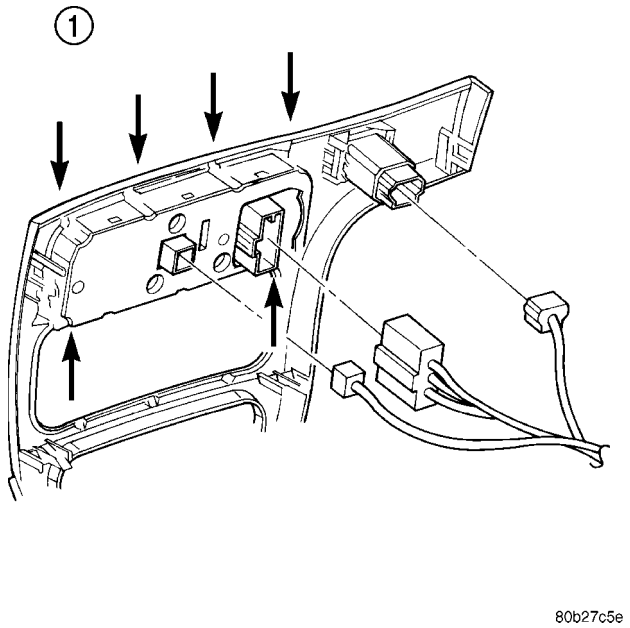

Fig. 12 A/C HEATER CONTROL REMOVE/INSTALL

1 - RETAINING SCREWS

(4) From the back of the center trim bezel, remove the six retaining screws from the a/c heater control head and remove from the bezel.

INSTALLATION

(1) Place the control into place on the back of the instrument panel center bezel and install the six retaining screws to the a/c heater control.

(2) Connect the two electrical connectors to the back of the control head and traction control switch (if equipped).

(3) Install the instrument panel center bezel.

(4) Install the ash receiver assembly, if necessary.

(5) Connect the negative battery cable remote terminal to the remote battery post.

(6) To allow the BCM to learn the new control head, perform HVAC system calibration. (Refer to 24 - HEATING & AIR CONDITIONING - STANDARD PROCEDURE - HVAC SYSTEM CALIBRATION)

A/C HEATER CONTROL - MTC

DIAGNOSIS AND TESTING - A/C HEATER CONTROL

The control switch and timer circuit are tested in the vehicle with DRB scan tool. Refer to the Body Diagnostic Procedures Manual.

REMOVAL

(1) Disconnect negative battery cable.

(2) Carfully pull out the control bezel and contol from the intrument panel.

(3) Disconnect the control wiring harness (Fig. 13).

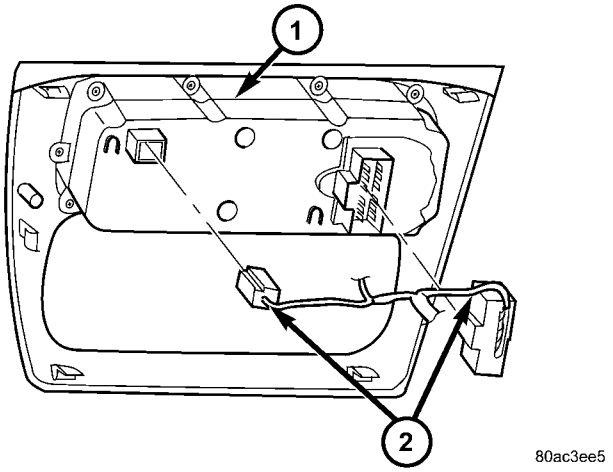

Fig. 13 CONTROL HARNESS

1 - CONTROL
2 - CONTROL CONNECTORS

(4) Remove control mounting screws (Fig. 14).

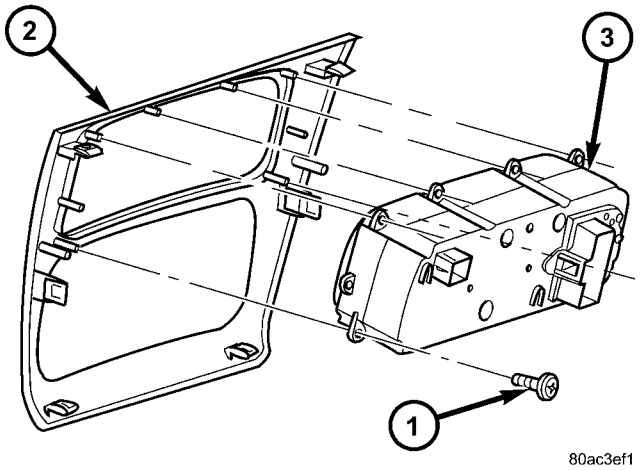

Fig. 14 CONTROL MOUNTING SCREWS

1 - SCREW
2 - BEZEL
3 - CONTROL

A/C HEATER CONTROL - MTC (Continued)

INSTALLATION

(1) Install control on bezel and install mounting screws.

(2) Connect control harness to control.

(3) Align bezel with instrument panel (Fig. 15) and push bezel and control into place.

CAUTION: Do not push on control knobs, control could be damage.

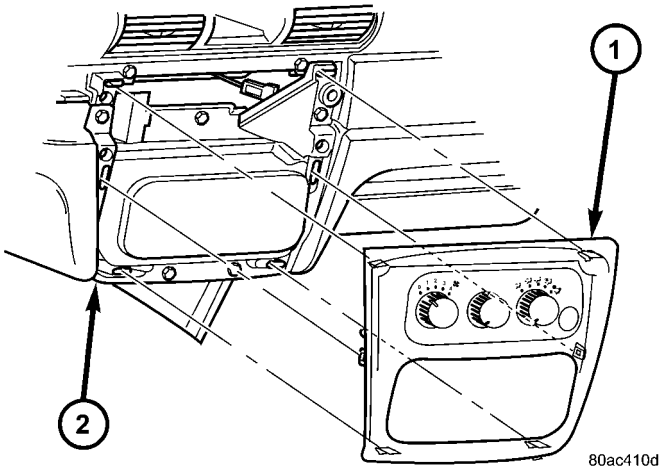

Fig. 15 CONTROL BEZEL

1 - BEZEL
2 - INSTRUMENT PANEL

(4) Connect negative battery cable.

A/C PRESSURE TRANSDUCER

DESCRIPTION

The A/C pressure transducer is located on the discharge line near the condenser and functions as a refrigerant system pressure sensor. This switch prevents compressor operation when the discharge line pressure approaches extreme levels. The transducer is a factory-calibrated unit and cannot be adjusted or repaired. If faulty or damaged, it must be replaced.

OPERATION

When discharge line pressure rises above 2971 kPa (431 psi) the PCM turns off the a/c clutch. When pressure drops below 206 kPa (30 psi), the PCM turns off the a/c clutch.

REMOVAL

CAUTION: A/C pressure transducer switch connector terminal contacts can be damaged by probing tools during system diagnosis and repair. Failure to use their respective mating terminals or pin gauge to check for tightness will cause contact beam spreads. This will result in loss of continuity.

(1) Disconnect the wire harness connector from the A/C pressure transducer.

(2) Remove transducer with a 14 mm open-end wrench.

NOTE: A slight release of pressure trapped in the fitting may be experienced. It is not necessary to discharge the refrigerant system.

INSTALLATION

NOTE: O-ring replacement is required whenever the pressure transducer is serviced. Be sure to use the O-ring specified for this vehicle.

(1) Thread pressure transducer on to discharge line.

(2) Tighten pressure transducer to 6 N·m (50 in. lbs.).

(3) Connected wire connector to transducer.

EVAPORATOR TEMPERATURE SENSOR

DESCRIPTION

The evaporator temperature sensor (Fig. 16) is located at the coldest point on the face of the evaporator. The switch is attached to the evaporator coil with the sensing probe inserted into the coil fins. The evaporator temperature sensor prevents condensate water on the evaporator coil from freezing and obstructing A/C system air flow.

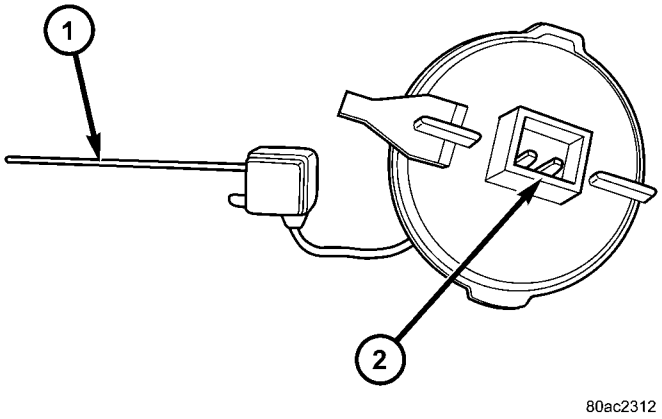

Fig. 16 EVAPORATOR TEMPERATURE SENSOR

1 - PROBE
2 - CONNECTOR

EVAPORATOR TEMPERATURE SENSOR (Continued)

OPERATION

The Body Control Module (BCM) will send a Programmable Communications Interface (PCI) bus message to the Powertrain Control Module (PCM), which will check engine, coolant temperature, and refrigerant pressure temperature before turning ON the A/C Compressor Clutch. Turning ON the A/C Compressor Clutch will allow the system to cool the evaporator. The BCM will send a message to the PCM when the evaporator temperature becomes too cold. The PCM will then turn OFF the A/C Compressor Clutch, before evaporator freeze up occurs. The DRBIII® scan tool can be used to monitor this operation. The temperature set point at which the clutch is turned OFF varies with the outside ambient temperature. The temperature at which the clutch is turned ON is preset to 2º F above the OFF setpoint mentioned above. Refer to Evaporator Temperature Sensor Set point table and (Fig. 17) for the correct setpoint.

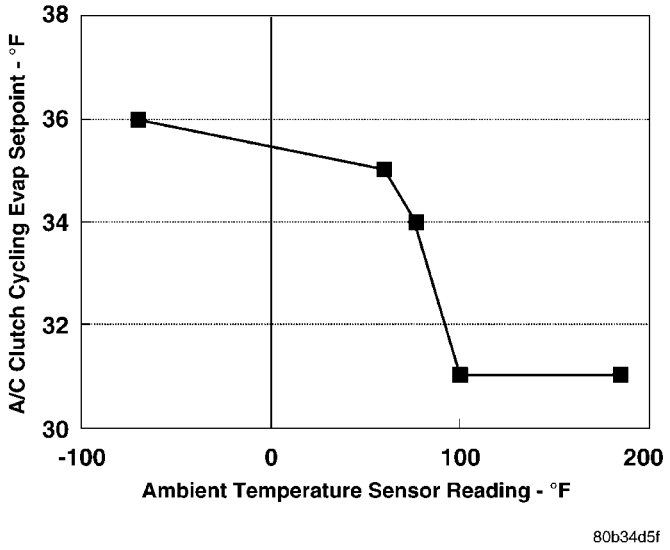

Fig. 17 EVAPORATOR TEMPERATURE SENSOR SET POINT

EVAPORATOR TEMPERATURE SENSOR SET POINT

AMBIENT TEMPERATURE SENSOR READING °F (° C)	A/C CLUTCH OFF EVAPORATOR TEMPERATURE SET POINT ° F (° C)
185 (85)	31 (-0.5)
100 (37.7)	31 (-0.5)
77 (25)	34 (1.1)
60 (15.5)	35 (1.6)
-70 (-56.6)	36 (2.2)

REMOVAL

(1) Disconnect negative battery cable.

(2) Remove the blower motor(Refer to 24 - HEATING & AIR CONDITIONING/DISTRIBUTION/BLOWER MOTOR - REMOVAL).

(3) Remove resistor card from underside of HVAC(Refer to 24 - HEATING & AIR CONDITIONING/CONTROLS/BLOWER MOTOR RESISTOR BLOCK - REMOVAL).

(4) Lower the glove box door.

(5) Reach through the glove compartment door opening and disconnect the evaporator temperature sensor wiring connector.

(6) Using a flat blade pry tool, pull back on the locking tab. Twist access plate clockwise one-quarter turn and pushed inside the A/C housing (Fig. 18). Then orientated the plate in such a way that it can be removed from the housing.

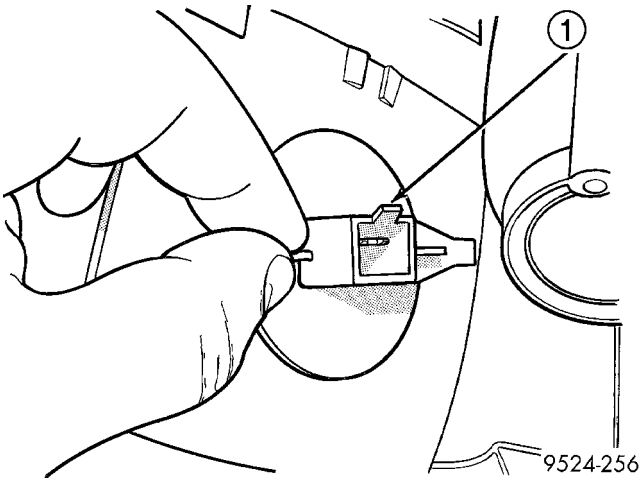

Fig. 18 Evaporator Probe

1 - EVAPORATOR PROBE

(7) Using the access plate hole in the housing as a view hole, reach hand up through blower opening to pull the evaporator probe from the evaporator coil.

INSTALLATION

(1) Install new sensor into the evaporator.

NOTE: The evaporator is manufactured with three holes for probe insertion. Insert the probe in the uppermost hole.

(2) Using the access plate hole in the housing as a view hole, reach up through blower opening to install the evaporator probe to the evaporator coil.

(3) Replace access plate to HVAC housing.

(4) Reach through the glove compartment door opening and connect the evaporator temperature sensor wiring connector.

(5) Install glove compartment door.

(6) Install the resistor card to the underside of the HVAC(Refer to 24 - HEATING & AIR CONDITIONING/CONTROLS/BLOWER MOTOR RESISTOR BLOCK - INSTALLATION).

(7) Install the blower motor(Refer to 24 - HEATING & AIR CONDITIONING/DISTRIBUTION/BLOWER MOTOR - INSTALLATION).

(8) Connect negative battery cable.

IN-CAR TEMPERATURE SENSOR

DESCRIPTION

The Automatic Temperature Control (ATC) in-car temperature sensor returns electrical signals to the Body Control Module (BCM). The in-car temperature sensor is used on ATC equipped vehicles only. The in-car temperature sensor is made up of two parts. One part is the in-car sensor aspirator motor assembly, and the second part is a temperature thermistor. The in-car sensor aspirator motor assembly attaches to the back of the ATC Control head (Fig. 19). This assembly has a small fan and a motor which draws air through the intake on the front of the ATC control. The in-car sensor thermistor is located inside of the ATC Control Head. The in-car sensor aspirator motor is part of the ATC Control and not a separate serviceable part. The ATC Control must be replaced if there is a fault relating to the motor. The in-car temperature sensor thermistor is part of the ATC Control and not a separate serviceable part. One must replace the ATC Control if the ATC self-diagnostics indicates a fault code. (Refer to 24 - HEATING & AIR CONDITIONING - DIAGNOSIS AND TESTING - SELF DIAGNOSTICS)

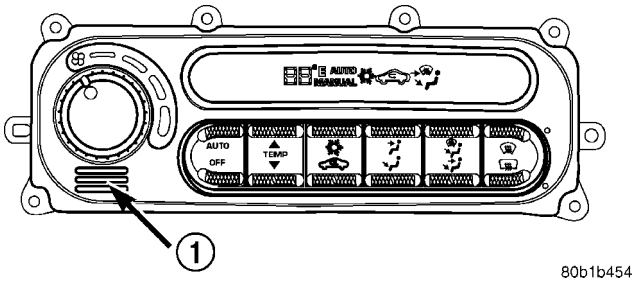

Fig. 19 ATC IN-CAR TEMPERATURE SENSOR

1 - ATC IN-CAR TEMPERATURE SENSOR

OPERATION

Air drawn from the passenger compartment by the in-car sensor aspirator motor assembly, and flows over the thermistor. The in-car sensor thermistor changes resistance with air temperature. The BCM measures this resistance and calculates the temperature of the air drawn into the ATC Control. The ATC system then makes adjustments to maintain the optimum passenger compartment comfort. Refer to the ATC In-Car Sensor Aspirator Motor Operation table for when the ATC Sensor is operating.

IN-CAR SENSOR ASPIRATOR MOTOR OPERATION	
CONDITION	MOTOR OPERATION
IGNITION SWITCH IS ON	MOTOR ALWAYS OPERATES, EVEN WHEN ATC CONTROL HEAD ″OFF″ BUTTON IS PUSHED
VEHICLE IS DRIVEN, THEN THE IGNITION SWITCH IS TURNED OFF	MOTOR TURNS OFF WHEN THE IGNITION SWITCH IS TURNED OFF
VEHICLE DOOR IS OPENED, AND LEFT OPEN, WITHOUT TURNING ON THE IGNITION SWITCH	MOTOR WILL TURN ON, AND THEN TURN OFF APPROXIMATELY 2 MINUTES FROM THE TIME THE DOOR WAS OPENED
VEHICLE DOOR IS OPENED, AND THEN CLOSED, WITHOUT TURNING ON THE IGNITION SWITCH	MOTOR WILL TURN ON, AND THEN TURN OFF APPROXIMATELY 2 MINUTES AFTER THE DOOR WAS CLOSED

DIAGNOSIS AND TESTING - IN-CAR SENSOR ASPIRATOR MOTOR

(1) Perform air flow test to check the aspirator motor assembly.

(a) Turn ignition to the ON position and push the OFF button to stop the ATC system airflow. This will make it easier to observe paper in step b.

(b) Place a small piece of newspaper in front of the aspirator motor opening on the ATC control. If the paper sticks to the opening, the in-car sensor aspirator motor is operating properly. The piece of paper should be only large enough to cover the grille opening (Fig. 20).

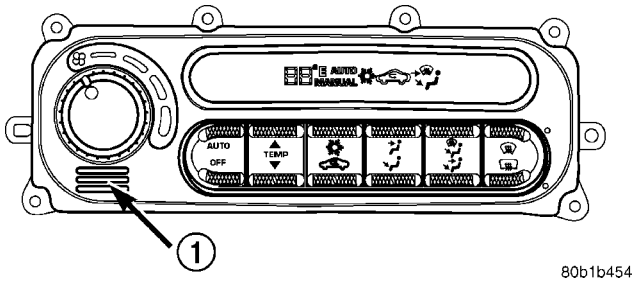

Fig. 20 ATC IN-CAR TEMPERATURE SENSOR

1 - GRILLE OPENING

(2) Check if the electrical connection and connector are OK.

IN-CAR TEMPERATURE SENSOR (Continued)

REMOVAL

WARNING: ON VEHICLES EQUIPPED WITH AIRBAGS, DISABLE THE AIRBAG SYSTEM BEFORE ATTEMPTING ANY STEERING WHEEL, STEERING COLUMN, OR INSTRUMENT PANEL COMPONENT DIAGNOSIS OR SERVICE. DISCONNECT AND ISOLATE THE BATTERY NEGATIVE (GROUND) CABLE, THEN WAIT TWO MINUTES FOR THE AIRBAG SYSTEM CAPACITOR TO DISCHARGE BEFORE PERFORMING FURTHER DIAGNOSIS OR SERVICE. THIS IS THE ONLY SURE WAY TO DISABLE THE AIRBAG SYSTEM. FAILURE TO TAKE THE PROPER PRECAUTIONS COULD RESULT IN AN ACCIDENTAL AIRBAG DEPLOYMENT AND POSSIBLE PERSONAL INJURY.

If the ATC in-car temperature sensor (fault 26) is verified to be bad, or if there is a problem with the in-car sensor aspirator motor, then the ATC control must be replaced. (Refer to 24 - HEATING & AIR CONDITIONING/CONTROLS/A/C HEATER CONTROL - REMOVAL)

SUN SENSOR

DESCRIPTION

The sun sensor is only used on vehicles equipped with Automatic Temperature Control (ATC). The sensor is mounted on the top of the instrument panel below the instrument panel top cover (Fig. 21).

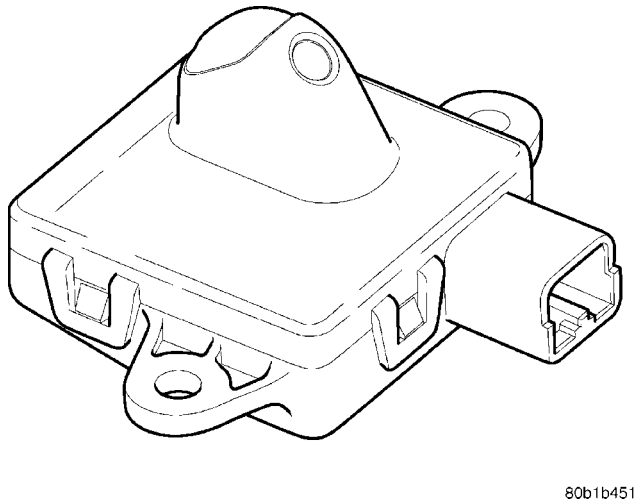

Fig. 21 ATC SUN SENSOR

OPERATION

The sun sensor is not a thermistor type sensor but rather a photo diode. For this reason the sun sensor responds to sun light intensity rather than temperature. It is used to aid in determining proper mode door position, temperature door position and blower speed. The sun sensor is also used to sense day/night conditions for automatic headlight control if so equipped, and has an LED indicator for the vehicle security system.

The sun sensor is not serviceable and must be replaced if found to be defective.

DIAGNOSIS AND TESTING - SUN SENSOR

WARNING: ON VEHICLES EQUIPPED WITH AIRBAGS, DISABLE THE AIRBAG SYSTEM BEFORE ATTEMPTING ANY STEERING WHEEL, STEERING COLUMN, OR INSTRUMENT PANEL COMPONENT DIAGNOSIS OR SERVICE. DISCONNECT AND ISOLATE THE BATTERY NEGATIVE (GROUND) CABLE, THEN WAIT TWO MINUTES FOR THE AIRBAG SYSTEM CAPACITOR TO DISCHARGE BEFORE PERFORMING FURTHER DIAGNOSIS OR SERVICE. THIS IS THE ONLY SURE WAY TO DISABLE THE AIRBAG SYSTEM. FAILURE TO TAKE THE PROPER PRECAUTIONS COULD RESULT IN AN ACCIDENTAL AIRBAG DEPLOYMENT AND POSSIBLE PERSONAL INJURY.

The sun sensor is located so the sun hits the sensor in the same way that it hits the driver and the passenger. It is important that the area in front of the sensor be unobstructed. Check that the following items are not in the way of the sun sensor.

- Windshield wipers that are adjusted too high.
- Stickers on the windshield that are directly in front of the sensor.
- Top cover which is not properly installed. The sun sensor should be 1/4 inch. above the top cover.
- Caps or papers which might cover the sensor.

Some ATC equipped vehicles may exhibit a lack of passenger comfort in sunny weather such as in the early afternoon. Verify that the ATC system is functioning properly. Inspect the location of the sun sensor. The sun sensor must protrude approximately 1/4 inch above the instrument panel top cover to insure proper operation. If the sensor does not protrude 1/4 inch, perform the following procedure:

- Confirm that the top cover is properly installed
- Remove the top cover
- Remove fasteners from sun sensor
- Install one 1/4-20 nut per fastener under the sun sensor so that it is shimmed higher
- Reinstall the sun sensor. Do not overtighten screw. If a longer screw is required, use 8-15x1 inch.

Refer to the proper Diagnostic Information for the electrical test.

SUN SENSOR (Continued)

REMOVAL

WARNING: ON VEHICLES EQUIPPED WITH AIRBAGS, DISABLE THE AIRBAG SYSTEM BEFORE ATTEMPTING ANY STEERING WHEEL, STEERING COLUMN, OR INSTRUMENT PANEL COMPONENT DIAGNOSIS OR SERVICE. DISCONNECT AND ISOLATE THE BATTERY NEGATIVE (GROUND) CABLE, THEN WAIT TWO MINUTES FOR THE AIRBAG SYSTEM CAPACITOR TO DISCHARGE BEFORE PERFORMING FURTHER DIAGNOSIS OR SERVICE. THIS IS THE ONLY SURE WAY TO DISABLE THE AIRBAG SYSTEM. FAILURE TO TAKE THE PROPER PRECAUTIONS COULD RESULT IN AN ACCIDENTAL AIRBAG DEPLOYMENT AND POSSIBLE PERSONAL INJURY.

(1) Open the hood and disconnect the negative battery cable remote terminal from the remote battery post.
(2) Remove the instrument panel top cover(Refer to 23 - BODY/INSTRUMENT PANEL/INSTRUMENT PANEL TOP COVER - REMOVAL).
(3) Remove the two Sun Sensor mounting screws.
(4) Lift the sensor out of the instrument panel and disconnect the wiring.
(5) Remove the sensor from the vehicle.

INSTALLATION

(1) Connect the wiring harness connector to the sensor and position in the vehicle.
(2) Install the two sensor fasteners.
(3) Install the instrument panel top cover(Refer to 23 - BODY/INSTRUMENT PANEL/INSTRUMENT PANEL TOP COVER - INSTALLATION).
(4) Connect the negative battery cable remote terminal to the remote battery post(Refer to 8 - ELECTRICAL/BATTERY SYSTEM/CABLES - INSTALLATION).

CAUTION: The sun sensor must protrude approximately 1/4 inch above the instrument panel top cover. This will ensure proper operation.

If the sensor does not protrude 1/4 inch, perform the following procedure:

- Confirm that the top cover is properly installed
- Remove the top cover
- Remove fasteners from sun sensor
- Install one 1/4-20 nut per fastener under the sun sensor so that it is shimmed higher
- Reinstall the sun sensor. Do not overtighten screw. If a longer screw is required, use 8-15x1 inch.

AMBIENT TEMP SENSOR

DESCRIPTION

The ambient air temperature sensor (Fig. 22) is located on the inside of front bumper beam.

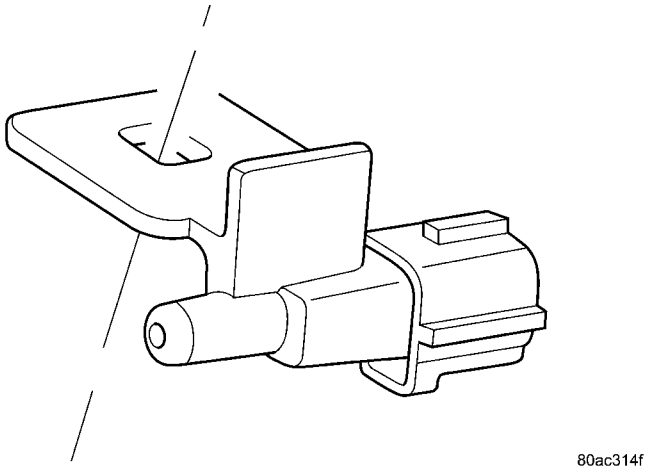

Fig. 22 AMBIENT TEMP SENSOR

OPERATION

The ambient temperature sensor is used by the A/C system to adjust evaporator temperatures on vehicles equipped with the ATC system.

REMOVAL

(1) Remove sensor mounting push pin (Fig. 23).
(2) Disconnect sensor wiring connector.

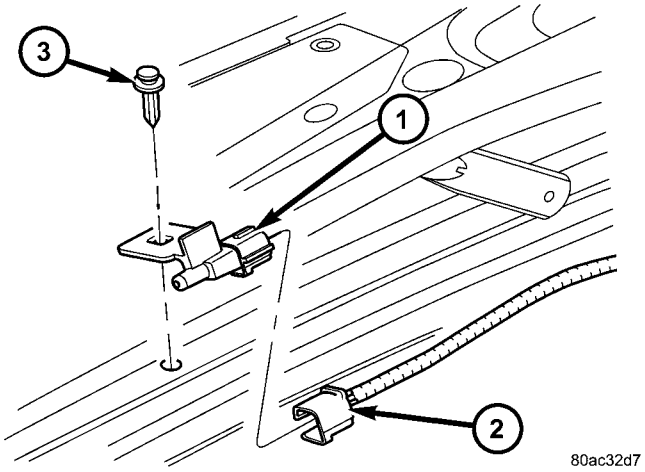

Fig. 23 AMBIENT TEMP SENSOR

1 - SENSOR
2 - WIRING CONNECTOR
3 - PUSH PIN

INSTALLATION

(1) Connect the sensor wiring harness connector.
(2) Install the sensor fastener push pin.

BLEND DOOR ACTUATOR

DESCRIPTION

The blend door actuator is a motor/geartrain assembly which mechanically positions the blend door. The actuator is mounted to the bottom of the HVAC housing in the center.

OPERATION

A potentiometer in the actuator allows the BCM to know the exact position of the blend door at all times. The blend door actuator is not serviceable and must be replaced if found to be defective.

REMOVAL

(1) Disconnect negative battery cable.
(2) Remove the passengerside hush panel.
(3) Disconnect the electrical connection.
(4) Remove actuator retaining screws and pull actuator straight down (Fig. 24). Note actuator shaft position for installation reference.

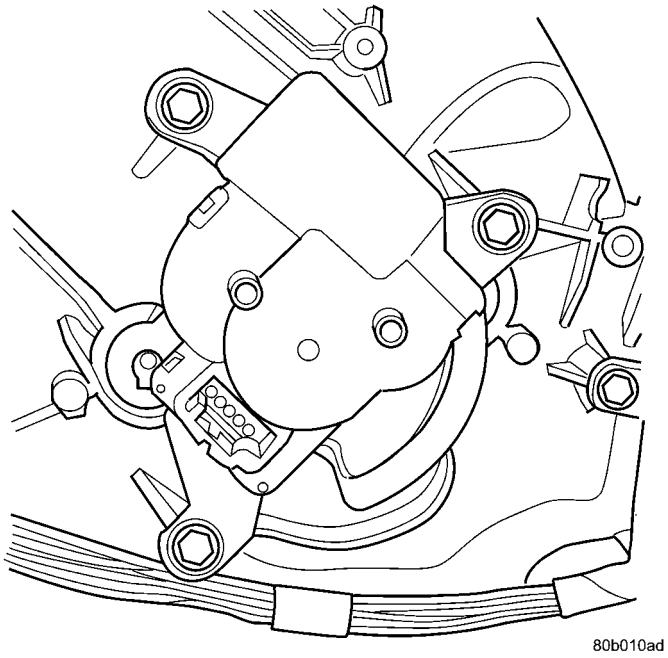

Fig. 24 BLEND DOOR ACTUATOR

INSTALLATION

(1) Install blend door actuator on the housing, making sure the shaft spline is positioned properly with the cam (Fig. 25).
(2) Install tighten the actuator mounting.
(3) Connect wire harness connector to the actuator.
(4) Install the passengerside hush panel.
(5) Connect the negative battery cable.

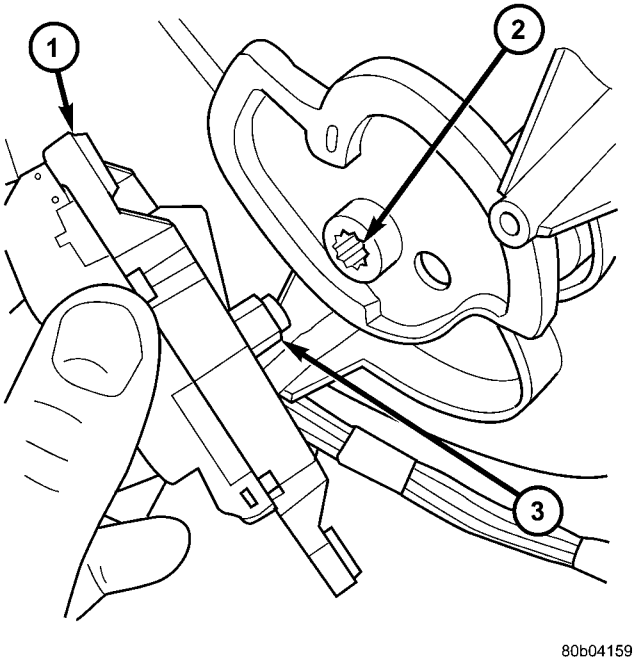

Fig. 25 BLEND ACTUATOR SPLINE

1 - ACTUATOR
2 - CAM SPLINE
3 - ACTUATOR SPLINE

MODE DOOR ACTUATOR

DESCRIPTION

The mode door actuator is a motor/geartrain assembly. It mechanically positions the panel/bi-level door and the heat/defrost door. The actuator is mounted to the bottom of the HVAC housing on the left side.

OPERATION

A potentiometer in the actuator allows the BCM (for both manual and ATC systems) to know the exact position of the doors at all times. The actuator is not serviceable and must be replaced if found to be defective.

MODE DOOR ACTUATOR (Continued)

REMOVAL

(1) Disconnect battery negative cable.
(2) Remove left silencer panel.
(3) Remove wiring connection from actuator.
(4) Remove mode actuator (Fig. 26) mounting screws and pull actuator straight down. Note actuator shaft position for installation reference.

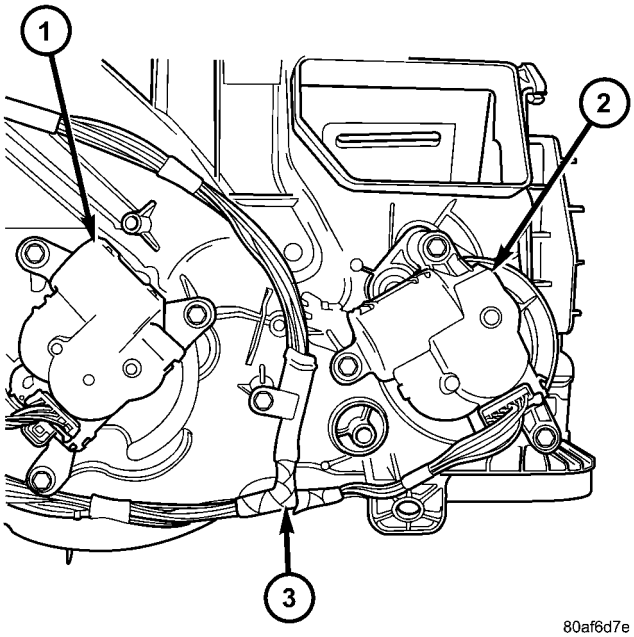

Fig. 26 ACTUATORS

1 - BLEND ACTUATOR
2 - MODE ACTUATOR
3 - HARNESS

INSTALLATION

(1) Install mode door actuator on the housing, make sure spline shaft is positioned properly with the cam (Fig. 27).
(2) Install and tighten the mounting screws.
(3) Connect actuator wiring harness to the actuator.
(4) Install console left side panel.
(5) Install left silencer panel.
(6) Connect the negative battery cable.

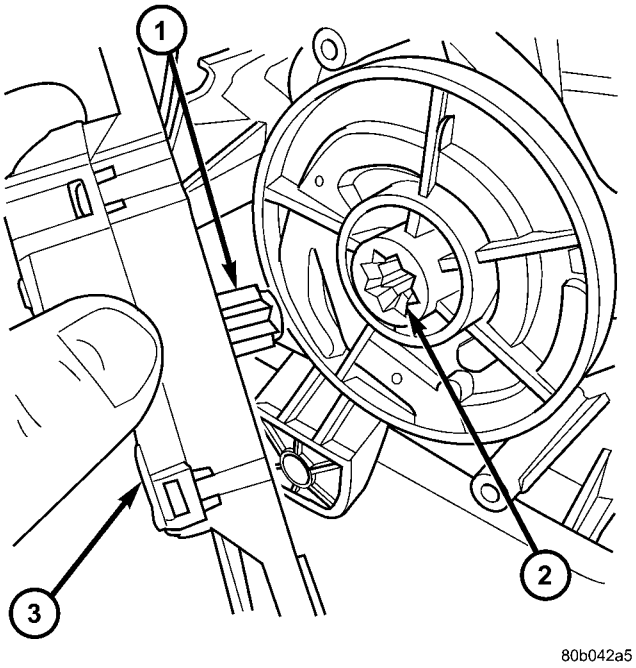

Fig. 27 MODE ACTUATOR SPLINE

1 - ACTUATOR SPLINE
2 - CAM SPLINE
3 - BLEND ACTUATOR

RECIRCULATION DOOR ACTUATOR

DESCRIPTION

The recirculation door actuator is a motor/geartrain assembly. It mechanically positions the recirculation door. The actuator is mounted to the right side of the HVAC housing.

OPERATION

A potentiometer in the actuator allows the BCM (for both manual and ATC systems) to know the exact position of the door at all times. The actuator is not serviceable and must be replaced if found to be defective.

RECIRCULATION DOOR ACTUATOR (Continued)

REMOVAL

(1) Disconnect negative battery cable.

(2) Remove the instrument panel. Refer to 23 Body for the procedures.

(3) Remove actuator retaining screws (Fig. 28) and pull actuator straight off. Note actuator shaft position for installation reference.

(4) Disconnect the electrical connection.

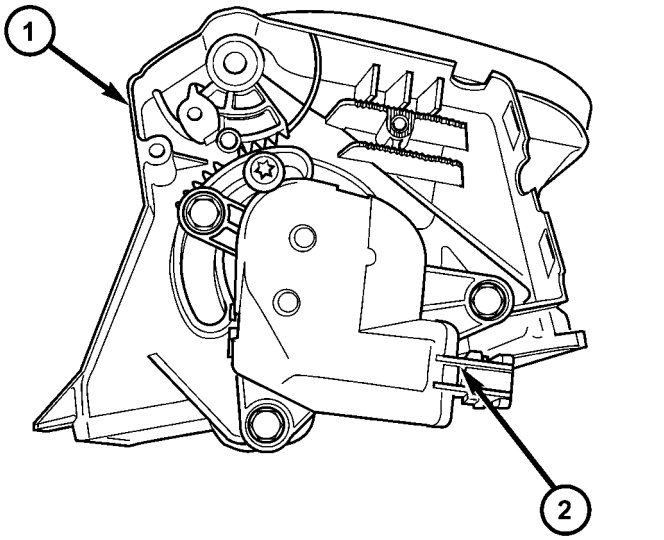

Fig. 28 RECIRCULATION ACTUATOR

1 - RECIRCULATION HOUSING
2 - ACTUATOR

INSTALLATION

(1) Connect wire harness connector to the recirculation door actuator.

(2) Install recirculation door actuator on the housing, making sure shaft spline is positioned properly with the gear (Fig. 29).

(3) Install and tighten actuator mounting screws.

(4) Install the instrument panel. (Refer to 23 - BODY/INSTRUMENT PANEL/INSTRUMENT PANEL ASSEMBLY - INSTALLATION)

(5) Connect the negative battery cable.

BLOWER MOTOR RESISTOR

DESCRIPTION

The blower motor resistor is mounted to the lower right side of the heater-A/C housing in the passenger compartment, where it can be accessed for service.

The blower motor resistor has multiple resistor wires, each of which will change the resistance in the blower motor ground path to change the blower motor speed. The blower motor switch directs the ground path through the correct resistor wire to obtain the selected blower motor speed. The blower motor resistor cannot be repaired and, if faulty or damaged, it must be replaced.

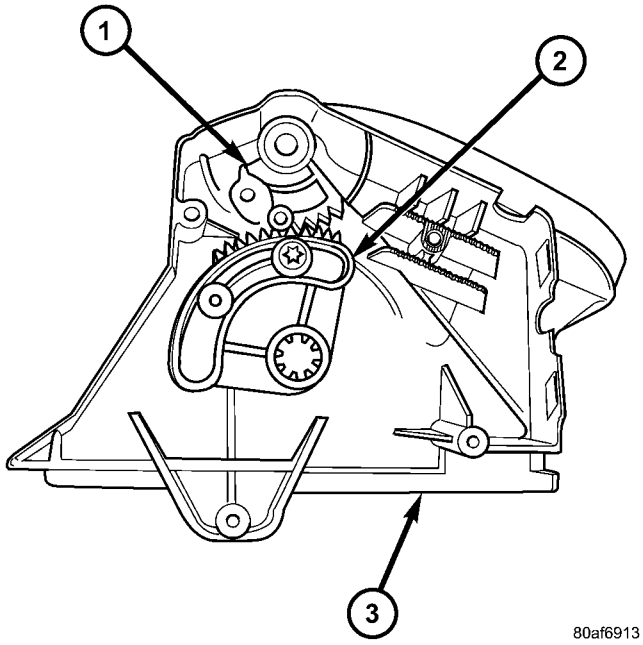

Fig. 29 RECIRCULATION DOOR GEAR

1 - DOOR GEAR
2 - ACTUATOR GEAR
3 - RECIRCULATION HOUSING

OPERATION

With the blower motor switch in the lowest speed position the ground path for the motor is applied through all of the resistor wires. Each higher speed selected with the blower motor switch applies the blower motor ground path through fewer of the resistor wires, increasing the blower motor speed. When the switch is in the highest speed position, blower motor resistor is bypassed and the blower motor receives a direct path to ground.

DIAGNOSIS AND TESTING-BLOWER MOTOR RESISTOR

The blower motor resistor is located in the passenger compartment on the lower side of the heater-A/C housing.

The blower motor resistor can be tested without removing it from its mounting position. For circuit descriptions and diagrams, (Refer to 8 - ELECTRICAL/WIRING DIAGRAM INFORMATION - DESCRIPTION).

BLOWER MOTOR RESISTOR (Continued)

WARNING: ON VEHICLES EQUIPPED WITH AIRBAGS, DISABLE THE AIRBAG SYSTEM BEFORE ATTEMPTING ANY STEERING WHEEL, STEERING COLUMN, OR INSTRUMENT PANEL COMPONENT DIAGNOSIS OR SERVICE. DISCONNECT AND ISOLATE THE BATTERY NEGATIVE (GROUND) CABLE, THEN WAIT TWO MINUTES FOR THE AIRBAG SYSTEM CAPACITOR TO DISCHARGE BEFORE PERFORMING FURTHER DIAGNOSIS OR SERVICE. THIS IS THE ONLY SURE WAY TO DISABLE THE AIRBAG SYSTEM. FAILURE TO TAKE THE PROPER PRECAUTIONS COULD RESULT IN AN ACCIDENTAL AIRBAG DEPLOYMENT AND POSSIBLE PERSONAL INJURY.

(1) Disconnect and isolate the battery negative cable.

(2) Unplug the wire harness connector from the blower motor resistor.

(3) Check for continuity between each of the blower motor switch input terminals of the resistor and the resistor output terminal. In each case there should be continuity. If OK, repair the wire harness circuits between the blower motor switch and the blower motor resistor or blower motor as required. If not OK, replace the faulty blower motor resistor.

REMOVAL

(1) Remove lower right silencer panel.

(2) Disconnect wiring connectors (Fig. 30) from resistor.

(3) Remove blower resistor mounting screws.

(4) Pull blower motor resistor out of HVAC housing.

INSTALLATION

(1) Install blower resistor into HVAC housing.

(2) Install and tighten the two resistor mounting screws.

(3) Connect resistor wiring harness.

(4) Install right silencer panel (Refer to 23 - BODY/INSTRUMENT PANEL/INSTRUMENT PANEL ASSEMBLY - INSTALLATION).

THERMAL LIMITER SWITCH

DESCRIPTION

The thermal limiter switch measures compressor surface temperature. If compressor surface temperature is excessive, the switch cuts battery feed to the compressor clutch coil. The switch will reset itself, once compressor surface temperature returns to normal. The switch is not adjustable or serviceable, if faulty the compressor must be replaced.

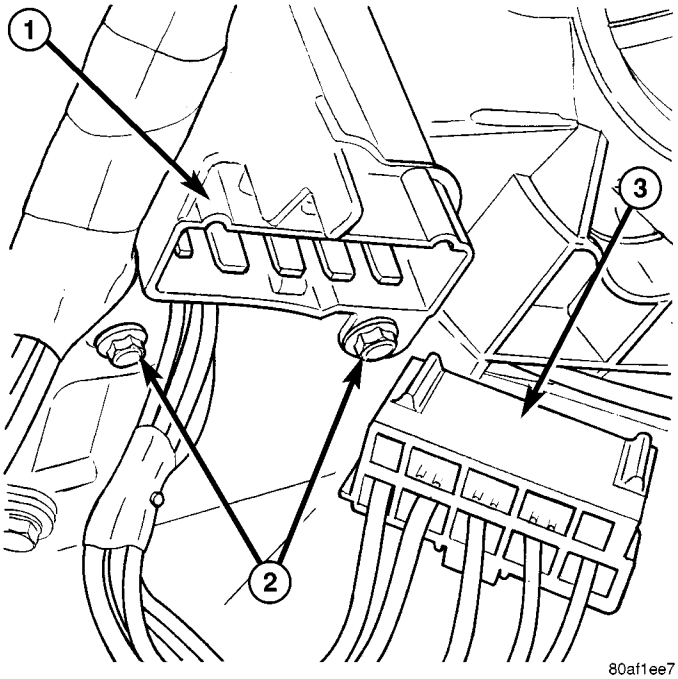

Fig. 30 RESISTOR BLOCK

1 - RESISTOR
2 - MOUNTING SCREWS
3 - CONNECTOR

OPERATION

The thermal limiter switch interrupts battery feed to the compressor clutch coil when temperature reaches 122 - 128° C (250 - 260° F). The switch restores clutch coil battery feed when the temperature drops to 104 - 116° C (220 - 240° F).

DIAGNOSIS AND TESTING - THERMAL LIMITER SWITCH

(1) Unplug Thermal Limiter connector.

(2) With an ohmmeter, check for continuity between the two terminals. If no continuity is present replace compressor.

(3) The Thermal Limiter is calibrated to open and close at:

- Open circuit (no continuity) Temperature: 122 - 128°C (252 - 262°F)
- Close circuit (continuity) Temperature: 106 - 116°C (225 - 235°F)

NOTE: The thermal limiter switch is not serviceable. If the switch fails, the compressor must be replaced.

POWER MODULE

DESCRIPTION

The blower motor power module is only used in vehicles equipped with Automatic Temperature Control (ATC). It is located on the lower right side of the HVAC unit housing, and is controlled by the Body Control Module (BCM).

OPERATION

The power module receives pulse width modulated (PWM) signals from the BCM. The power module varies voltage to the blower motor for different blower speeds based on the ATC software. There are 14 selectable speeds, while the Auto mode provides 256 variations.

REMOVAL

WARNING: ON VEHICLES EQUIPPED WITH AIRBAGS, DISABLE THE AIRBAG SYSTEM BEFORE ATTEMPTING ANY STEERING WHEEL, STEERING COLUMN, OR INSTRUMENT PANEL COMPONENT DIAGNOSIS OR SERVICE. DISCONNECT AND ISOLATE THE BATTERY NEGATIVE (GROUND) CABLE, THEN WAIT TWO MINUTES FOR THE AIRBAG SYSTEM CAPACITOR TO DISCHARGE BEFORE PERFORMING FURTHER DIAGNOSIS OR SERVICE. THIS IS THE ONLY SURE WAY TO DISABLE THE AIRBAG SYSTEM. FAILURE TO TAKE THE PROPER PRECAUTIONS COULD RESULT IN AN ACCIDENTAL AIRBAG DEPLOYMENT AND POSSIBLE PERSONAL INJURY.

(1) Open hood and disconnect the negative battery cable remote terminal from the remote battery post(Refer to 8 - ELECTRICAL/BATTERY SYSTEM/CABLES - REMOVAL).

(2) Remove lower right underpanel silencer/duct.

(3) Disconnect wiring connector to the power module.

(4) Remove the power module retaining screws.

(5) Pull the power module out of HVAC housing.

INSTALLATION

(1) Install the power module in the HVAC housing.

(2) Install the two screws that secure the power module to the HVAC housing and tighten to 2.2 N·m (20 in. lbs.).

(3) Plug in the harness connector to the power module.

(4) Install the lower right underpanel silencer/duct.

(5) Connect the negative battery cable remote terminal to the remote battery post(Refer to 8 - ELECTRICAL/BATTERY SYSTEM/CABLES - INSTALLATION).

DISTRIBUTION

TABLE OF CONTENTS

	page
BLOWER MOTOR	
REMOVAL	29
INSTALLATION	29
HVAC HOUSING	
DESCRIPTION	29
OPERATION	29
REMOVAL	29
DISASSEMBLY	30
ASSEMBLY	36
INSTALLATION	40
INSTRUMENT PANEL A/C OUTLETS	
REMOVAL	40
INSTALLATION	40

BLOWER MOTOR

REMOVAL

(1) Disconnect negative battery cable.
(2) Remove lower right silencer panel.
(3) Remove blower motor connector.
(4) Remove the three blower motor mounting screws.
(5) Remover blower motor (Fig. 1) from housing.

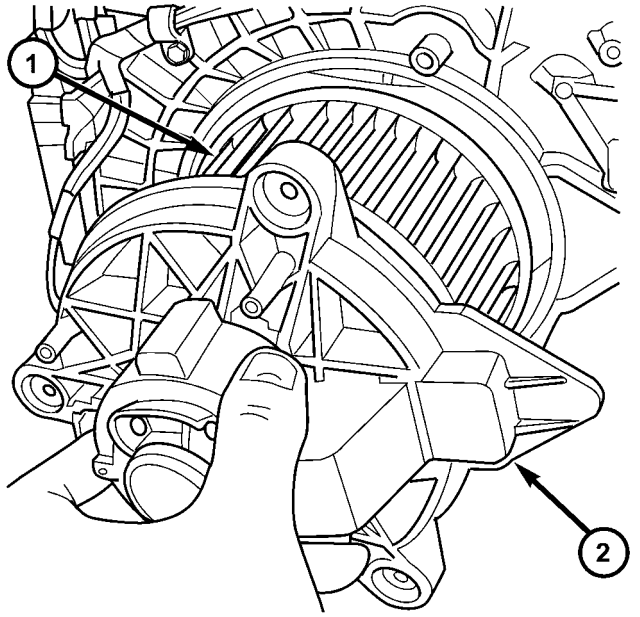

Fig. 1 BLOWER MOTOR

1 - BLOWER WHEEL
2 - BLOWER MOTOR

INSTALLATION

(1) Install blower motor into the housing.
(2) Install the three blower motor mounting screws.
(3) Connect blower motor wiring harness.
(4) Install silencer panel.

HVAC HOUSING

DESCRIPTION

The HVAC housing is mounted under the instrument panel to the dash panel. It houses the heater core, evaporator coil, blower motor and a series of doors. The doors are used to direct air from the blower motor to verious duct and through the heater core/evaporator coil.

OPERATION

The system draws outside air through the cowl opening at the base of the windshield. It then flows into the plenum chamber above the Heater A/C unit housing and passes through the evaporator. At this point airflow can be directed either through or around the heater core. This is done by adjusting the blend-air door with the TEMP control on the control head. After the air passes the blend air door, the air flow is then directed from the PANEL, BI-LEVEL (panel and floor), and FLOOR-DEFROST outlets. Air flow velocity can be adjusted with the blower speed selector switch on the control head.

Ambient air intake can be shut off by closing the recirculating air door. This will recirculate the air that is already inside the vehicle. Rotating the MODE control knob to the Defrost/Floor or Defrost setting on the control head will engage the compressor. This will send refrigerant through the evaporator, and remove heat and humidity from the air before it goes through the heater core.

REMOVAL

(1) Remove negative battery cable.
(2) Recover refrigerant from A/C system with R134a refrigerant recovery machine(Refer to 24 -

HVAC HOUSING (Continued)

HEATING & AIR CONDITIONING - STANDARD PROCEDURE).

(3) Drain the engine cooling system.(Refer to 7 - COOLING/ENGINE - SERVICE PROCEDURE).

(4) Remove heater hoses from heater core.

NOTE: Plug core tubes to prevent antifreeze from spilling on vehicle interior during removal.

(5) Remove quick connect clips from A/C lines at the expansion valve.

(6) Remove A/C lines from expansion valve.

(7) Remove expansion valve mounting bolts and remove valve.

NOTE: Cap the A/C lines and evaporator to prevent moisture from entering the refrigerant system.

(8) Remove floor console (Refer to 23 - BODY/INTERIOR/FLOOR CONSOLE - REMOVAL).

(9) Remove rear heat ducts.

(10) Remove nuts securing HVAC housing to dash panel under the hood.

(11) Remove the instrument panel and HVAC housing as an assembly(Refer to 23 - BODY/INSTRUMENT PANEL/INSTRUMENT PANEL ASSEMBLY - REMOVAL).

(12) Disconnect HVAC wiring connect from left side of the housing.

(13) Remove nuts mounting HVAC housing to dash panel.

DISASSEMBLY

(1) Disconnect recirculation actuator wiring connector.

(2) Remove recirculation housing mounting screws from the HVAC housing.

(3) Remove recirculation housing from HVAC housing.

(4) Remove recirculation actuator (Fig. 2) mounting screws and remove actuator.

(5) Remove recirculation actuator gear (Fig. 3) mounting screw and remove gear.

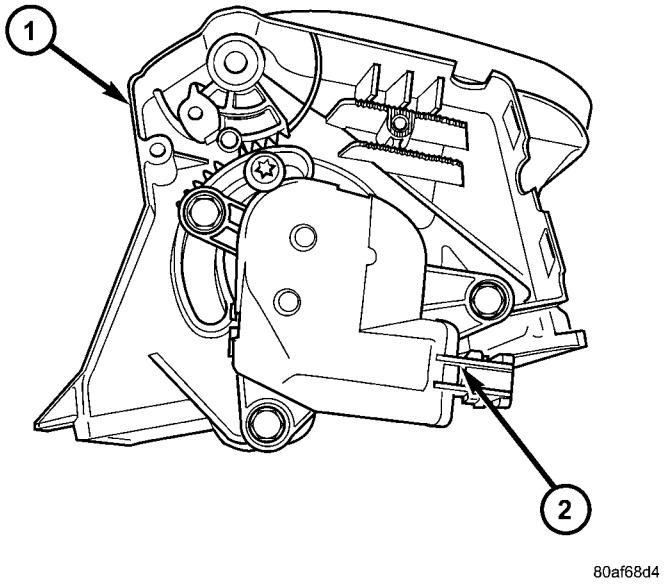

Fig. 2 RECIRCULATION ACTUATOR

1 - RECIRCULATION HOUSING
2 - ACTUATOR

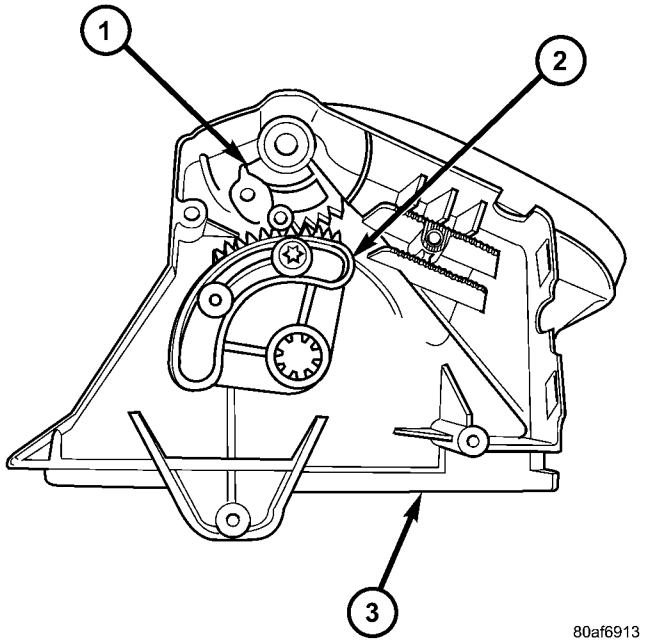

Fig. 3 RECIRCULATION DOOR GEAR

1 - DOOR GEAR
2 - ACTUATOR GEAR
3 - RECIRCULATION HOUSING

HVAC HOUSING (Continued)

(6) With a small screw driver, depress recirculation door gear release (Fig. 4) and remove gear.

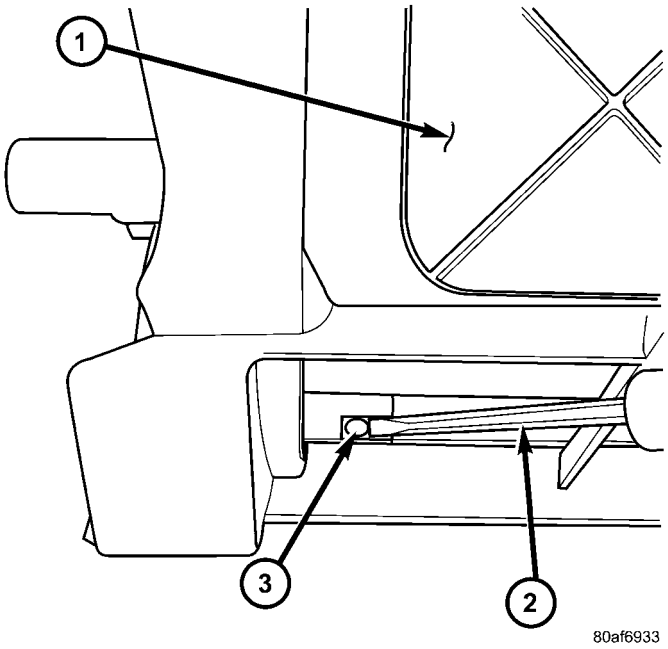

Fig. 4 RECIRCULATION DOOR

1 - DOOR
2 - SCREW DRIVER
3 - DOOR RELEASE

(7) Tilt the gear end of the recirculation door up and pull the door out of the housing.

(8) Remove blower motor wiring connector.

(9) Remove blower motor mounting screws and remove motor.

(10) Remove HVAC harness connector (Fig. 5) from the top of the housing.

(11) Remove seal (Fig. 6) from evaporator coil inlet/outlet.

(12) Remove retaining screws from the top of the housing.

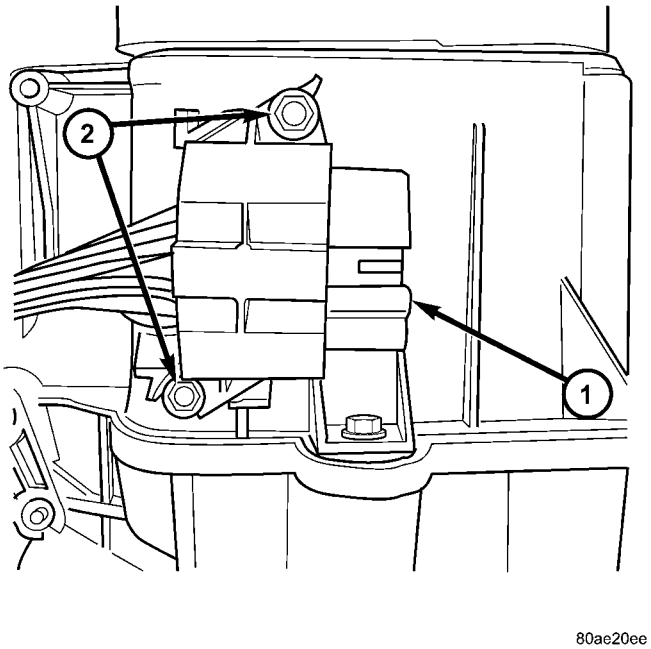

Fig. 5 HVAC HARNESS

1 - CONNECTOR
2 - MOUNTING SCREWS

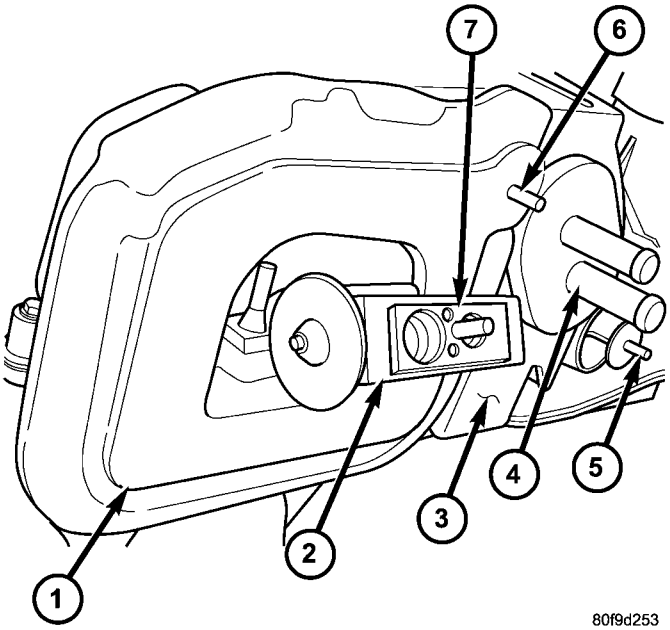

Fig. 6 Evaporator Housing Seals

1 - EVAPORATOR SEAL
2 - H-VALVE
3 - HVAC HOUSING
4 - HEATER CORE CONNECTIONS
5 - HVAC HOUSING MOUNTING STUD
6 - HVAC HOUSING MOUNTING STUD
7 - H-VALVE RETAINER SCREWS (2)

HVAC HOUSING (Continued)

(13) Separate the top housing from the bottom housing (Fig. 7).

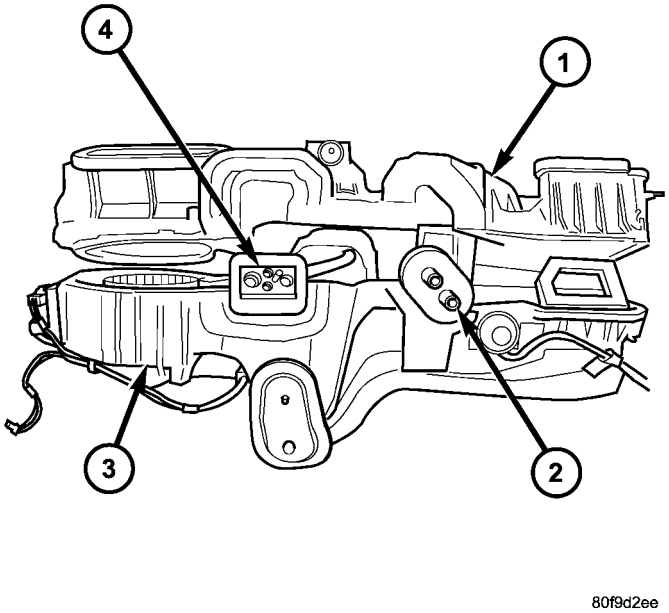

Fig. 7 HVAC HOUSING - NEW H-VALVE CONNECTOR

1 - TOP HOUSING
2 - HEATER CORE
3 - BOTTOM HOUSING
4 - EVAPORATOR CORE

(14) Remove evaporator temperature sensor (Fig. 8).

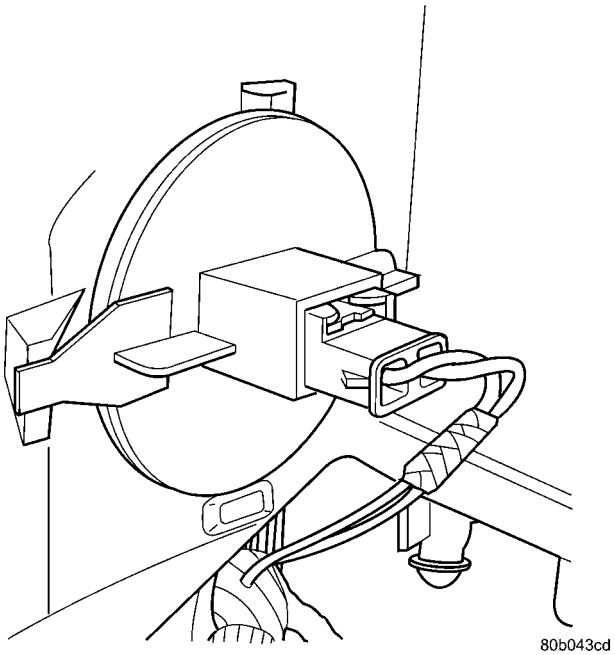

Fig. 8 EVAPORATOR TEMPERATURE SENSOR

(15) Lift evaporator (Fig. 9) out of the bottom housing.

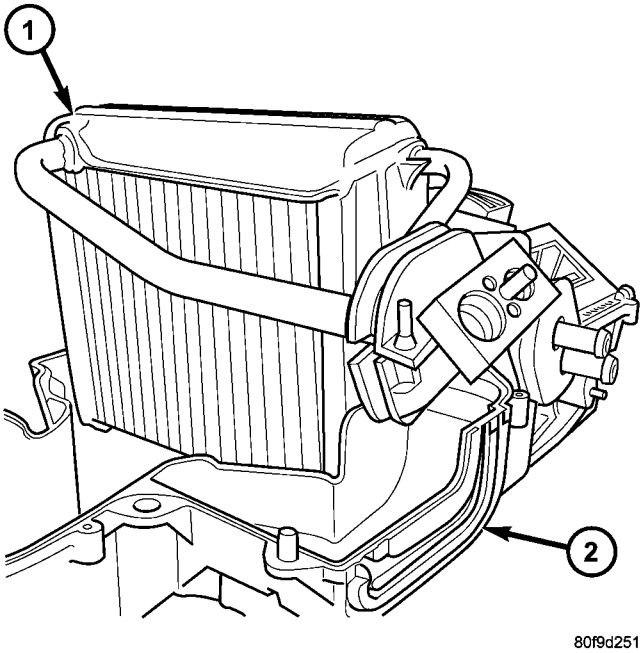

Fig. 9 EVAPORATOR COIL (NEW) H-VALVE

1 - EVAPORATOR HOUSING
2 - BOTTOM HOUSING

(16) Lift heater core (Fig. 10) out of the bottom housing.

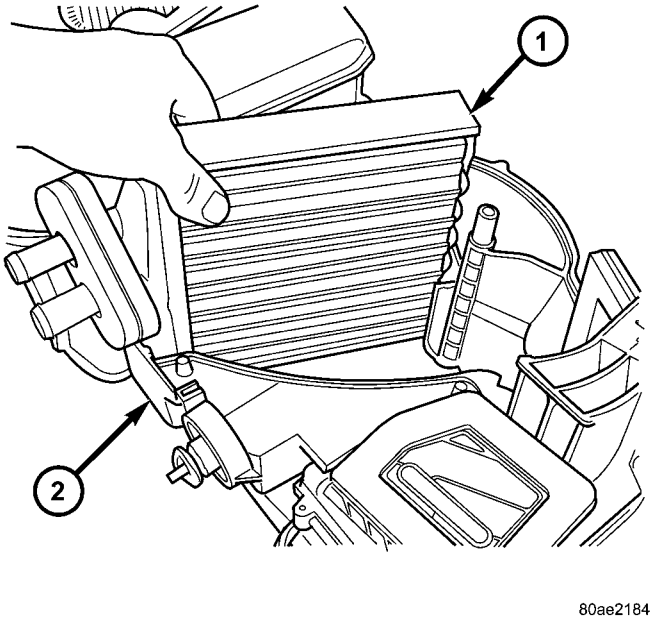

Fig. 10 HEATER CORE

1 - HEATER CORE
2 - BOTTOM HOUSING

HVAC HOUSING (Continued)

(17) Disconnect blower resistor wiring connector/ ATC blower motor power module wiring connectors.

(18) Remove blower resistor (Fig. 11) mounting screws /ATC blower motor power module (Fig. 12) mounting screws.

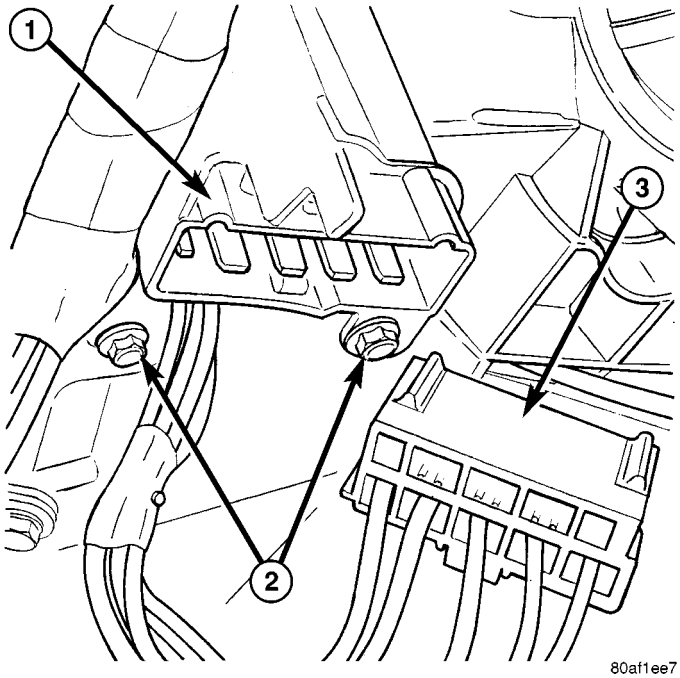

Fig. 11 RESISTOR BLOCK

1 - RESISTOR
2 - MOUNTING SCREWS
3 - CONNECTOR

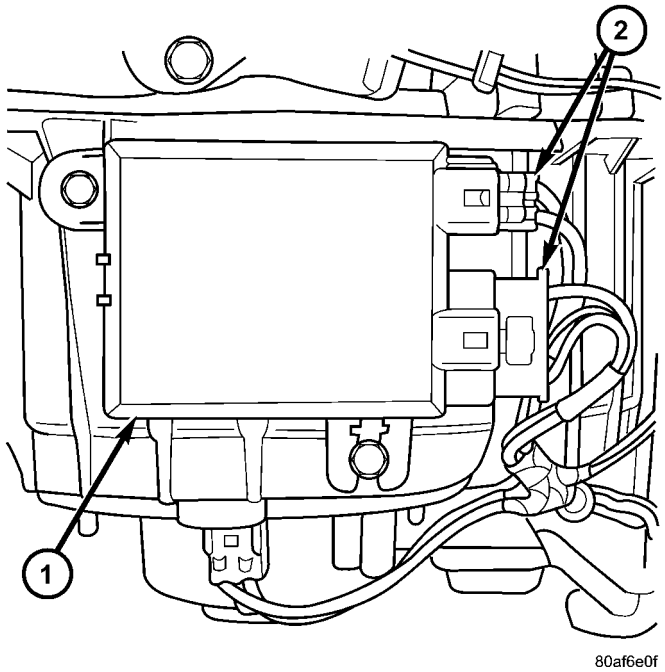

Fig. 12 BLOWER POWER MODULE

1 - MODULE
2 - CONNECTORS

(19) Remove resistor from the bottom of the housing or ATC module from the side of the housing if equipped.

(20) Remove lower heater duct (Fig. 13) screws and remove duct from the bottom housing.

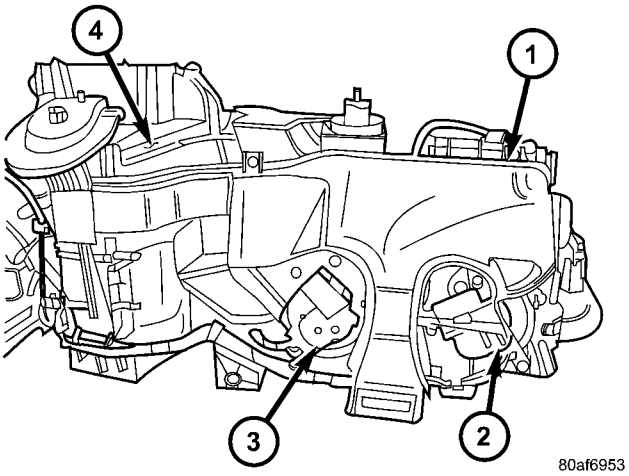

Fig. 13 LOWER HEATER DUCT

1 - HEATER DUCT
2 - MODE ACTUATOR
3 - BLEND ACTUATOR
4 - BOTTOM HOUSING

(21) Disconnect mode door actuator and blend door actuator wiring connectors (Fig. 14).

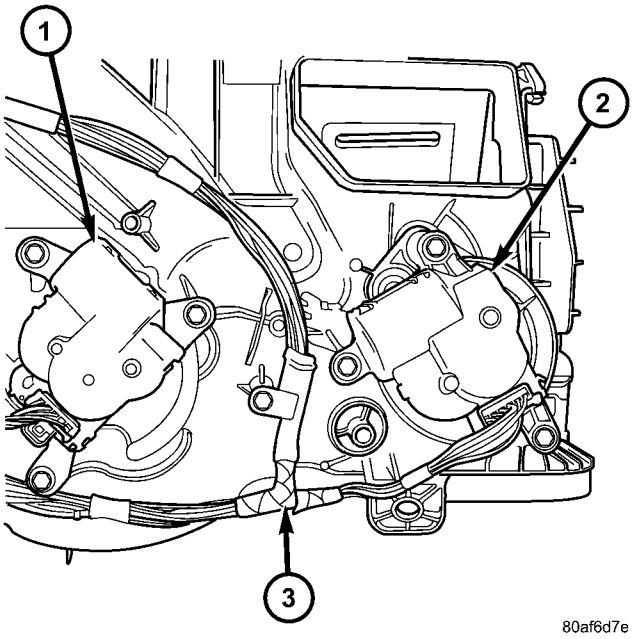

Fig. 14 ACTUATORS

1 - BLEND ACTUATOR
2 - MODE ACTUATOR
3 - HARNESS

HVAC HOUSING (Continued)

(22) Remove mode door actuator mounting screws and remove actuator.

(23) Remove mode door actuator cam (Fig. 15).

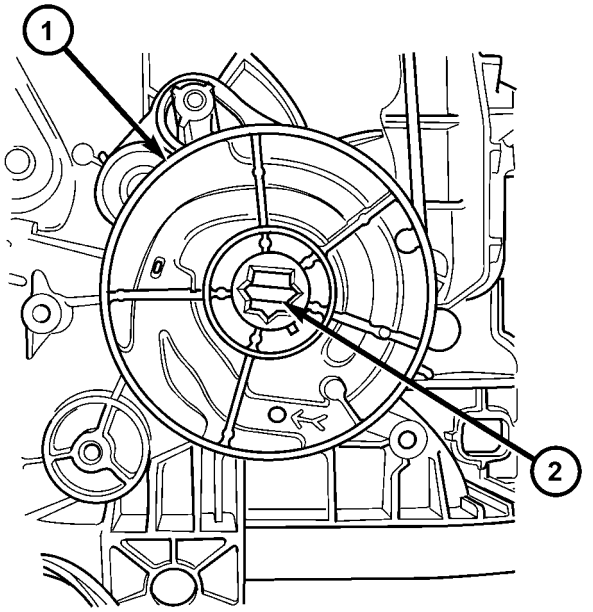

Fig. 15 MODE ACTUATOR CAM

1 - CAM
2 - CAM SPLINE

(24) Remove heat/defrost door lever mounting screw (Fig. 16).

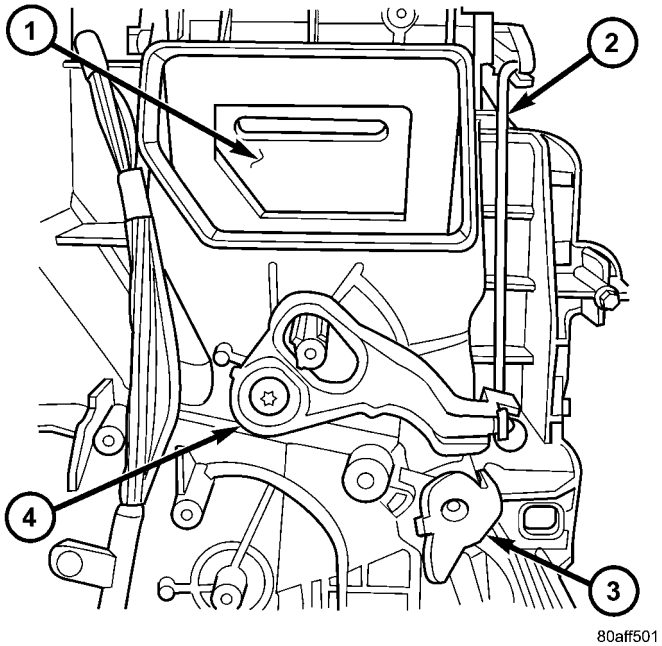

Fig. 16 DEFROSTER DOOR LEVER

1 - HEAT/DEFROST DOOR
2 - LINK
3 - PANEL/BI-LEVEL DOOR LEVER
4 - HEAT/DEFROST DOOR LEVER

(25) Remove heat/defrost door lever, link and door assembly (Fig. 17).

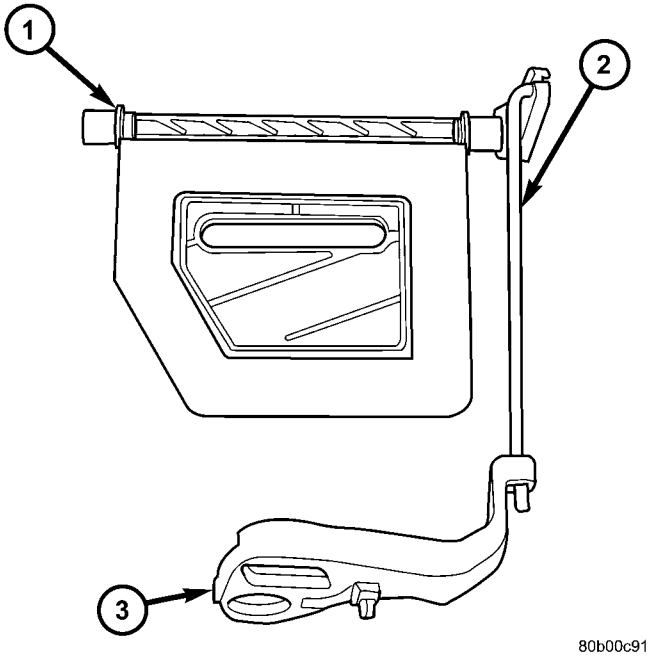

Fig. 17 HEAT/DEFROST DOOR ASSEMBLY

1 - HEAT/DEFROST DOOR
2 - LINK
3 - LEVER

(26) Pull panel/bi-level door lever off door (Fig. 18).

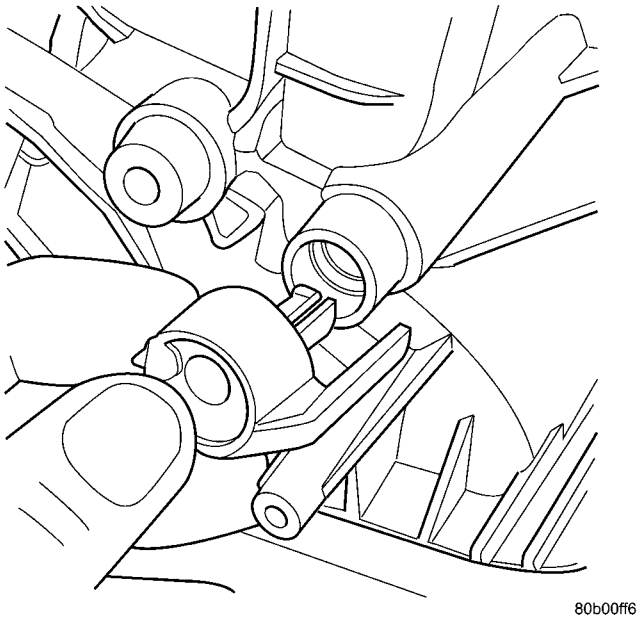

Fig. 18 PANEL/BI-LEVEL DOOR LEVER

HVAC HOUSING (Continued)

(27) Remove panel/bi-level door and air deflector from the bottom housing (Fig. 19).

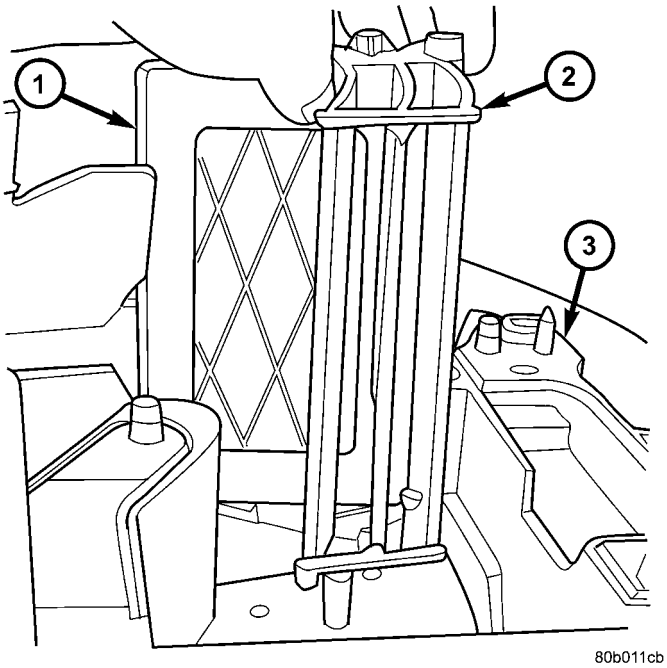

Fig. 19 PANEL/BI-LEVEL DOOR ASSEMBLY

1 - PANEL/BI-LEVEL DOOR
2 - TURNING VANES
3 - BOTTOM HOUSING

(28) Remove blend door actuator mounting screws (Fig. 20) and remove actuator.

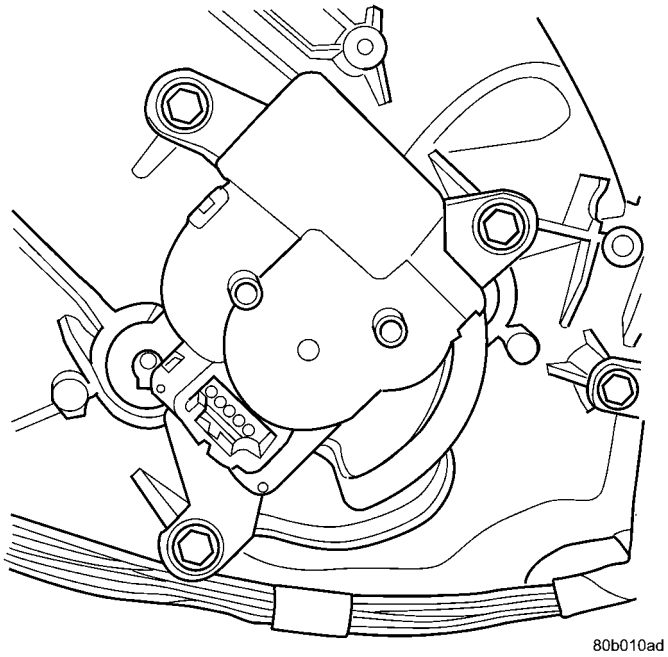

Fig. 20 BLEND DOOR ACTUATOR

(29) Remove blend door actuator cam.

NOTE: The cam (Fig. 21) must be in the correct position for removal.

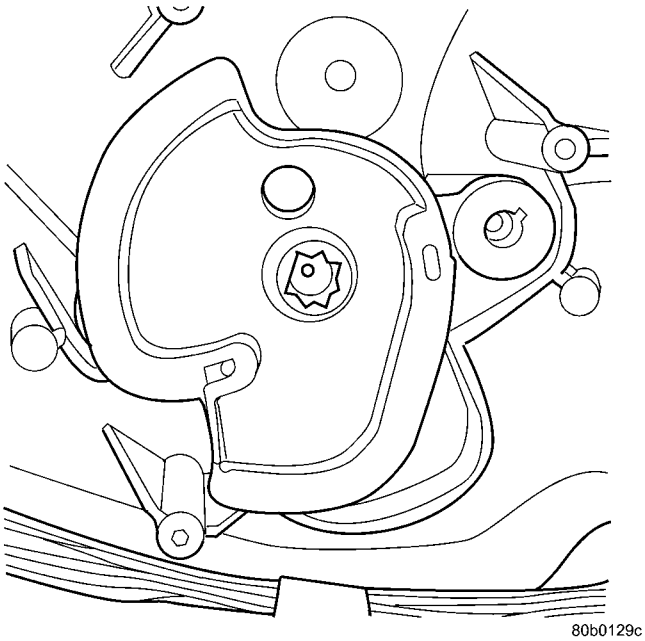

Fig. 21 BLEND DOOR ACTUATOR CAM

(30) With a small screw driver, depress blend door release (Fig. 22) and remove lever and door.

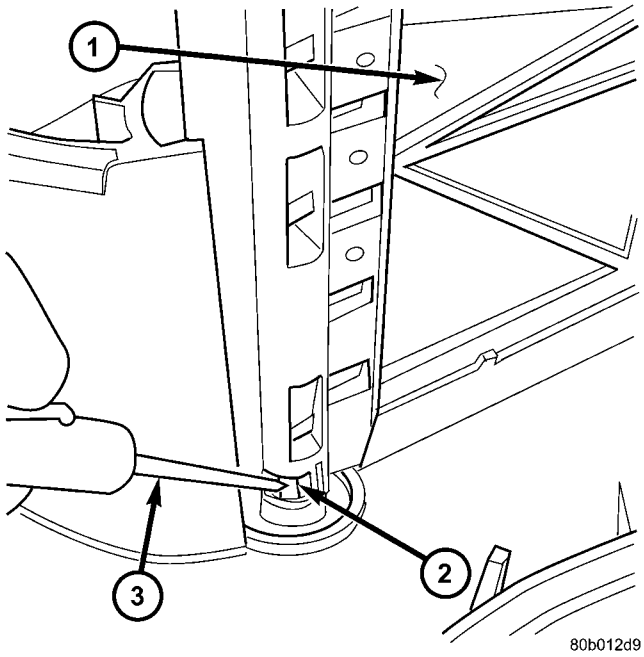

Fig. 22 BLEND DOOR RELEASE

1 - BLEND DOOR
2 - LEVER RELEASE
3 - SCREW DRIVER

(31) Pull other blend door lever off and remove lever and door.

HVAC HOUSING (Continued)

ASSEMBLY

(1) Install blend doors and levers into the bottom housing.

(2) Align blend actuator cam and lever followers (Fig. 23) and install cam.

NOTE: Rotate cam until it drops into the housing. The cam must be in the correct position to install.

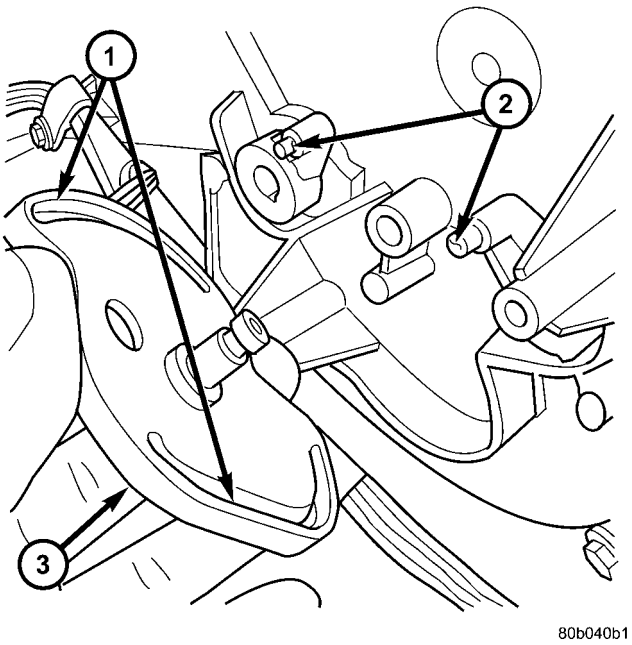

Fig. 23 BLEND CAM FOLLOWERS

1 - CAM GUIDES
2 - FOLLOWERS
3 - ACTUATOR

(3) Align blend actuator spline with cam spline (Fig. 24) and install actuator.

(4) Install blend actuator mounting screws and plug in wiring connector.

(5) Install panel/bi-level door and air deflector (Fig. 25) into the housing.

NOTE: Center vain of the air deflector must seat in the bottom housing locating tabs.

(6) Install panel/bi-level door lever into bottom of the door shaft.

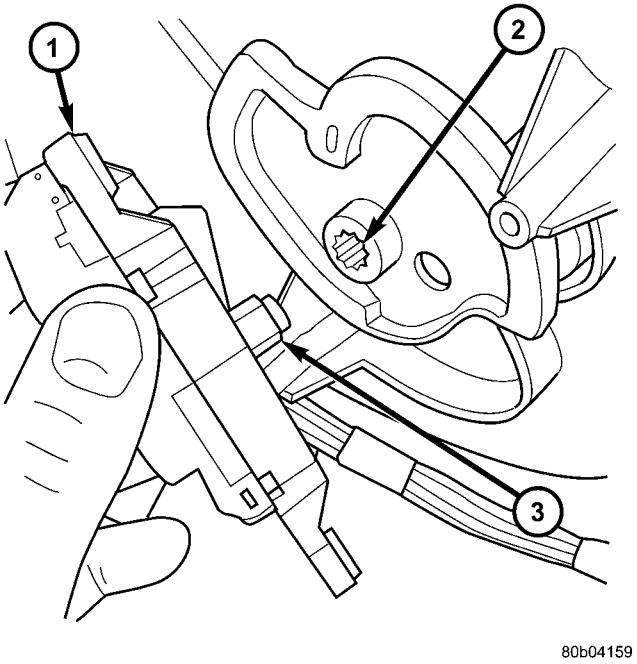

Fig. 24 BLEND ACTUATOR SPLINE

1 - ACTUATOR
2 - CAM SPLINE
3 - ACTUATOR SPLINE

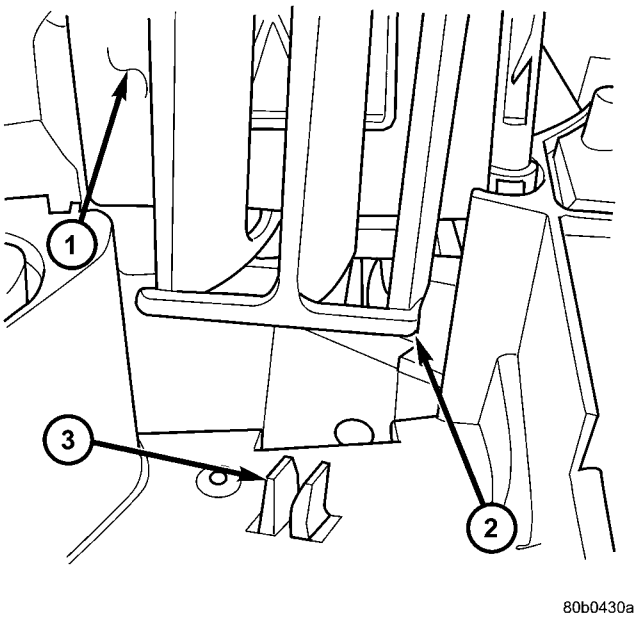

Fig. 25 PANEL/BI-LEVEL DOOR AND AIR DEFLECTOR

1 - PANEL/BI-LEVEL DOOR
2 - TURNING VANES
3 - LOCATING TABS

HVAC HOUSING (Continued)

(7) Install heat/defrost door, link and lever (Fig. 26).

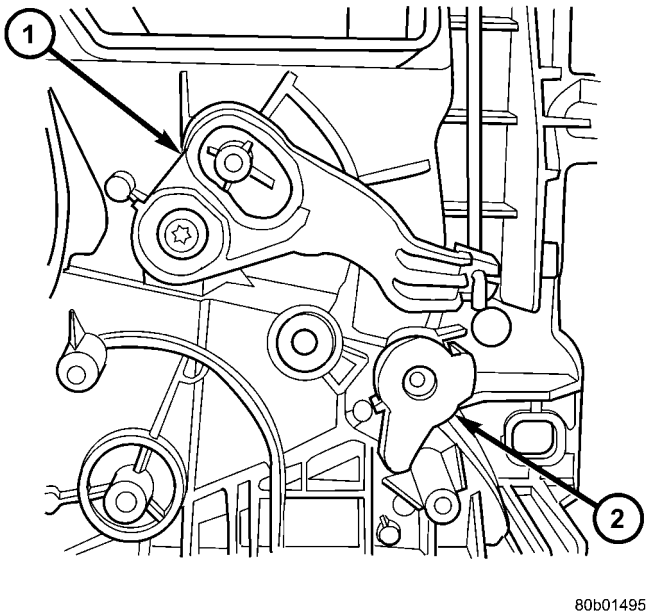

Fig. 26 MODE DOOR LEVERS

1 - HEAT/DEFROST LEVER
2 - PANEL/BI-LEVEL LEVER

(8) Align mode door cam with lever followers (Fig. 27) and install cam.

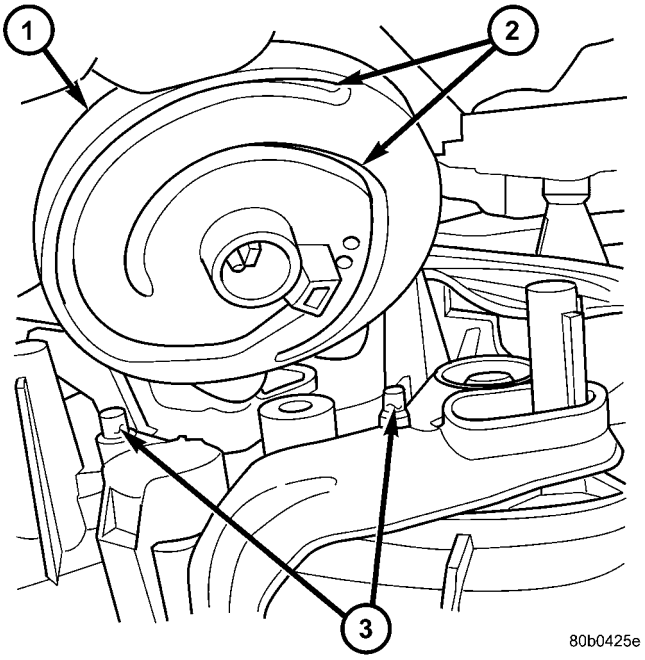

Fig. 27 MODE CAM FOLLOWERS

1 - CAM
2 - GUIDES
3 - FOLLOWERS

(9) Align mode actuator spline with cam spline (Fig. 28) and install actuator.

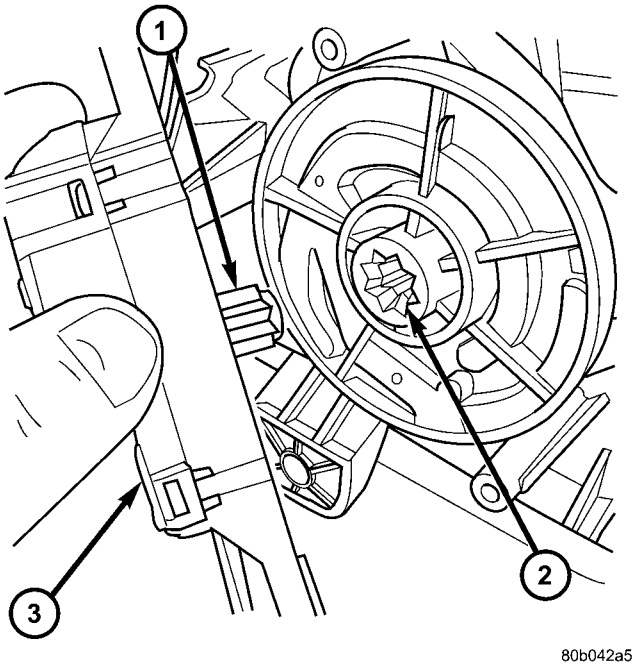

Fig. 28 MODE ACTUATOR SPLINE

1 - ACTUATOR SPLINE
2 - CAM SPLINE
3 - BLEND ACTUATOR

(10) Install mode actuator mounting screws and plug in wiring connector.

(11) Install blower motor (Fig. 29) into the bottom housing.

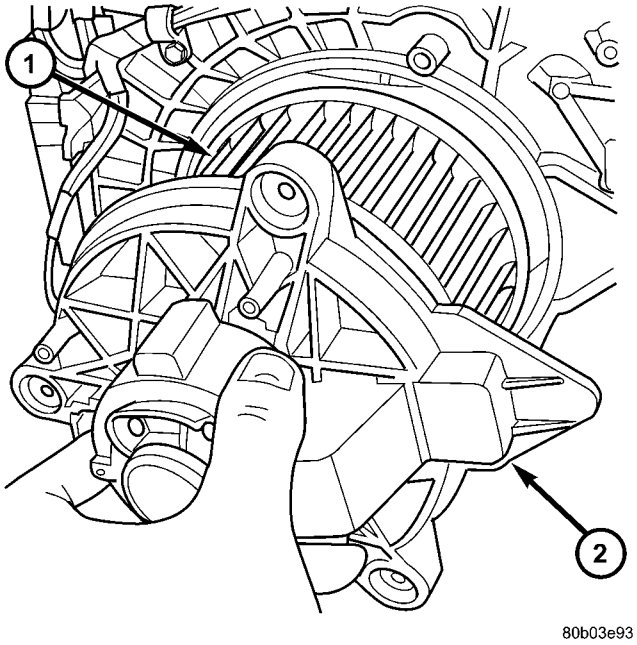

Fig. 29 BLOWER MOTOR

1 - BLOWER WHEEL
2 - BLOWER MOTOR

HVAC HOUSING (Continued)

(12) Install blower mounting screws and plug in wiring connector.

(13) Install blower resistor into the bottom of the housing (Fig. 30) or ATC blower motor power onto the side of the housing.

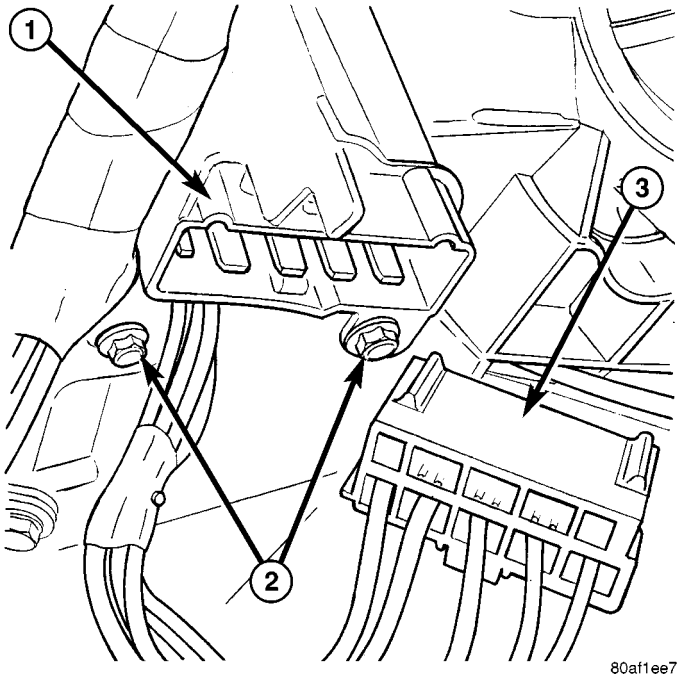

Fig. 30 RESISTOR BLOCK

1 - RESISTOR
2 - MOUNTING SCREWS
3 - CONNECTOR

(14) Install blower resistor/blower motor power module mounting screws and plug in wiring connector/connectors.

(15) Install lower heat duct (Fig. 31) and mounting screws.

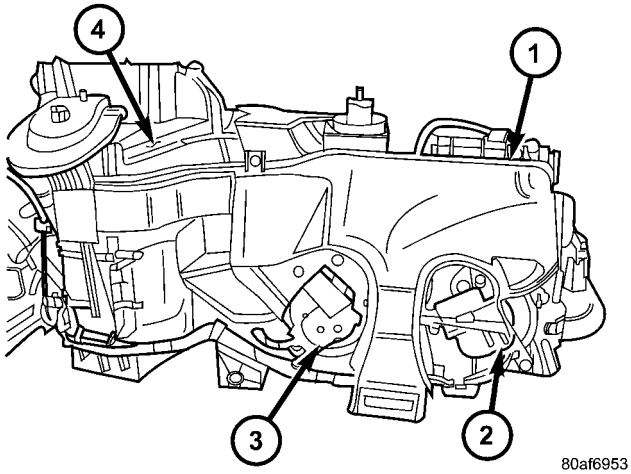

Fig. 31 LOWER HEATER DUCT

1 - HEATER DUCT
2 - MODE ACTUATOR
3 - BLEND ACTUATOR
4 - BOTTOM HOUSING

(16) Install evaporator coil (Fig. 32) into the bottom housing.

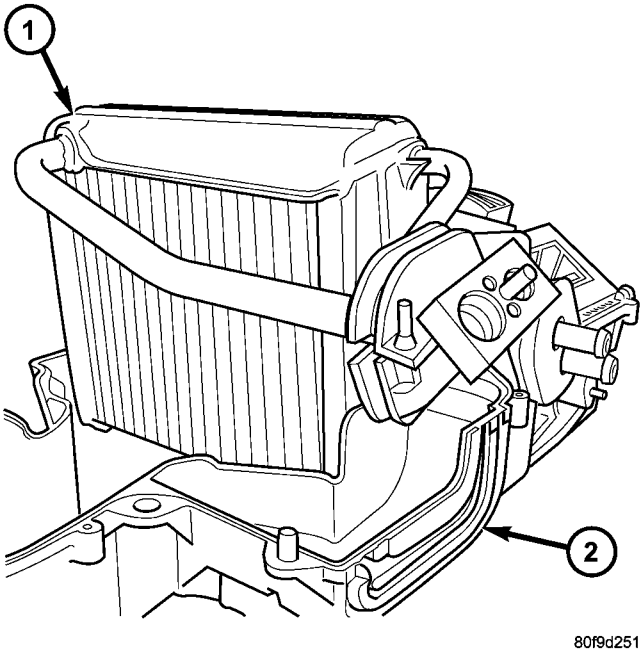

Fig. 32 EVAPORATOR COIL (NEW) H-VALVE

1 - EVAPORATOR HOUSING
2 - BOTTOM HOUSING

(17) Install evaporator temperature sensor.

(18) Install heater core (Fig. 33) into the bottom housing.

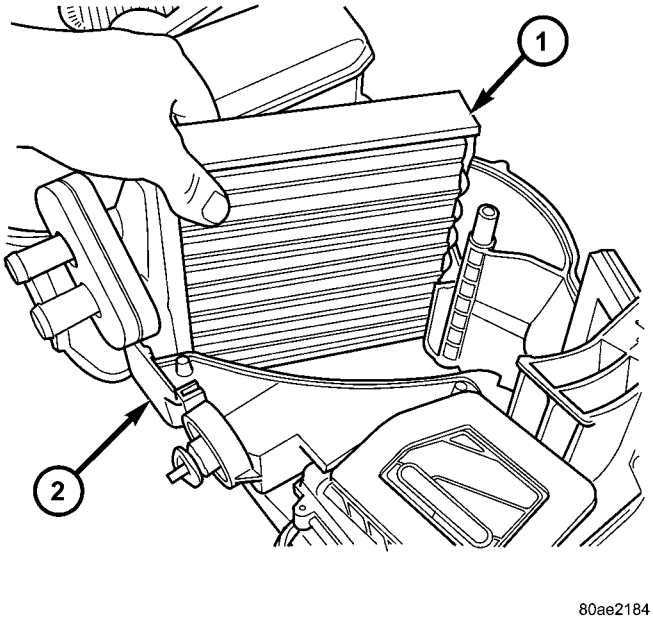

Fig. 33 HEATER CORE

1 - HEATER CORE
2 - BOTTOM HOUSING

HVAC HOUSING (Continued)

(19) Install and align the top of the housing with the door shafts (Fig. 34).

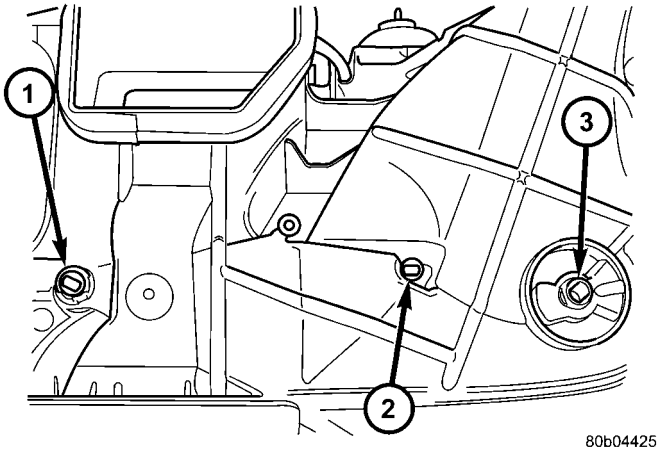

Fig. 34 DOOR SHAFTS

1 - PANEL/BI-LEVEL DOOR SHAFT
2 - BLEND DOOR SHAFT
3 - BLEND DOOR SHAFT

(20) Install top housing mounting screws.
(21) Install evaporator inlet/outlet seal (Fig. 35).

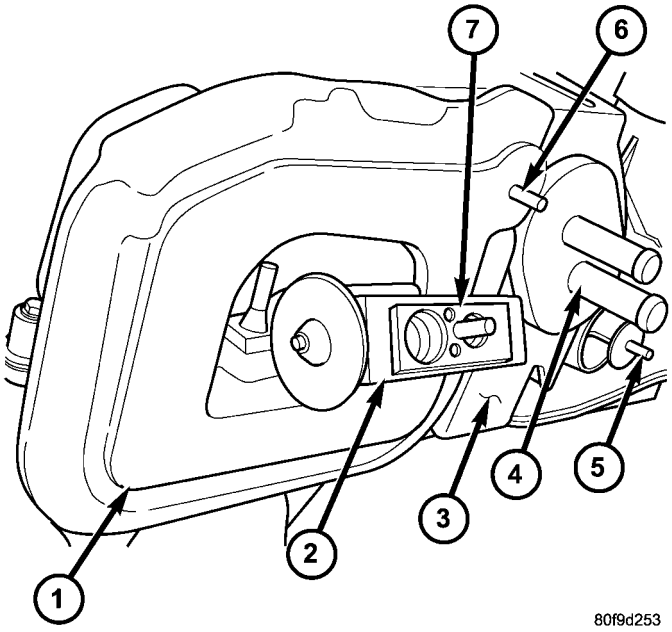

Fig. 35 Evaporator Housing Seals

1 - EVAPORATOR SEAL
2 - H-VALVE
3 - HVAC HOUSING
4 - HEATER CORE CONNECTIONS
5 - HVAC HOUSING MOUNTING STUD
6 - HVAC HOUSING MOUNTING STUD
7 - H-VALVE RETAINER SCREWS (2)

(22) Install recirculation door into the recirculation housing.
(23) Install recirculation door gear onto the door shaft.
(24) Align and install recirculation actuator gear (Fig. 36) with the door gear and install retaining screw.

NOTE: Gears must be align properly to operate.

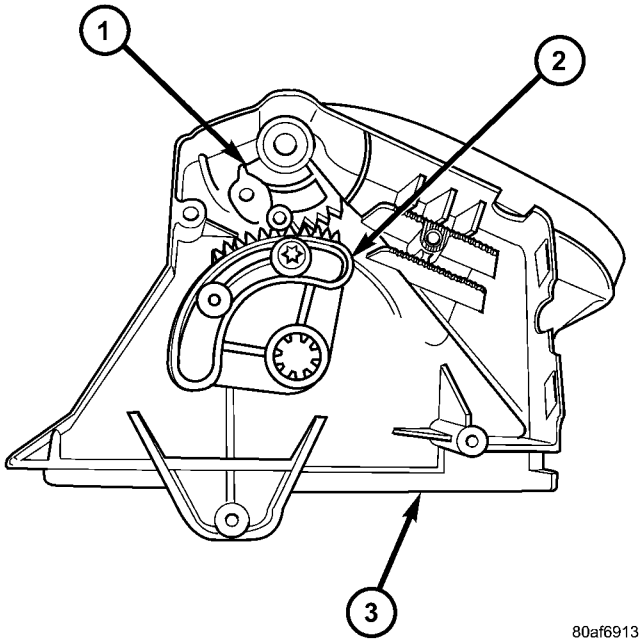

Fig. 36 RECIRCULATION DOOR GEAR

1 - DOOR GEAR
2 - ACTUATOR GEAR
3 - RECIRCULATION HOUSING

HVAC HOUSING (Continued)

(25) Align recirculation actuator spline with the actuator gear spline and install actuator (Fig. 37).

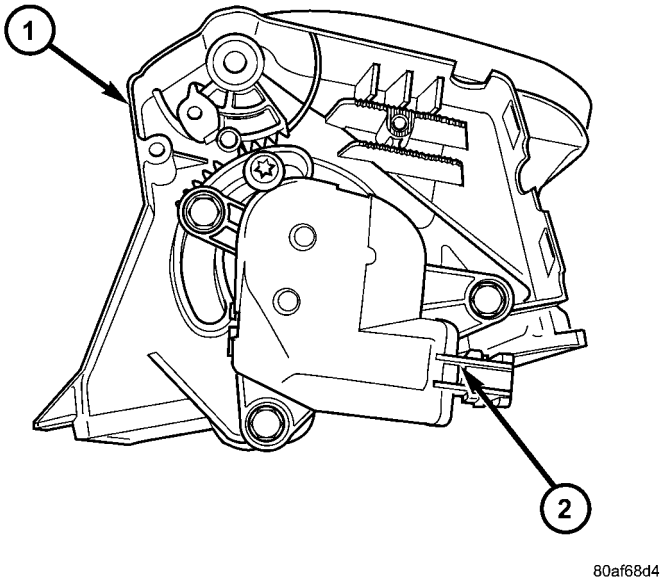

Fig. 37 RECIRCULATION ACTUATOR

1 - RECIRCULATION HOUSING
2 - ACTUATOR

(26) Install recirculation actuator mounting screws.

(27) Install recirculation housing onto the top housing and install mounting screws.

(28) Plug in recirculation actuator wiring connector.

INSTALLATION

(1) Align HVAC housing with instrument panel and install mounting nuts.

(2) Make sure the defrost, demist and lower center panel ducts are lined up and or properly connected with the HVAC outlets.

(3) Connect HVAC wiring harness

(4) Make sure the drain tube and evaporator seals are properly seated to the HVAC housing before installing the Instrument Panel and HVAC assembly into the vehicle.

(5) Install instrument panel and HVAC housing assembly(Refer to 23 - BODY/INSTRUMENT PANEL/INSTRUMENT PANEL ASSEMBLY - INSTALLATION).

(6) Install nuts securing HVAC housing to dash panel under the hood.

(7) Install rear heat ducts.

(8) Install console. (Refer to 23 - BODY/INTERIOR/FLOOR CONSOLE - INSTALLATION).

(9) Install expansion valve and tighten mounting bolts.

(10) Install A/C lines to expansion valve with **new** O-rings.

(11) Install quick connect clips to A/C lines.

(12) Install heater hoses to heater core.

(13) Install negative battery cable.

(14) Fill engine cooling system (Refer to 7 - COOLING/ENGINE - SERVICE PROCEDURE).

(15) Evacuate and charge A/C system with R134a refrigerant recovery machine.

INSTRUMENT PANEL A/C OUTLETS

REMOVAL

(1) Rotate barrel upward past stops until you hear a click noise.

(2) Rotate barrel downward to mid position.

(3) Pull barrel out. If needed, use a trim stick (special tool #C-4755) to help pry the barrels out.

INSTALLATION

(1) Position barrel over trunnions found on cluster bezel of a/c housing. Match the size of the trunnion to the size of the slot opening on the end of the barrels.

(2) Snap barrel into place.

PLUMBING

TABLE OF CONTENTS

page

A/C COMPRESSOR
DESCRIPTION 41
OPERATION 41
DIAGNOSIS AND TESTING - A/C COMPRESSOR 41
REMOVAL 42
INSTALLATION 42
A/C CONDENSER
DESCRIPTION 42
OPERATION 43
REMOVAL 43
INSTALLATION 43
A/C EXPANSION VALVE
DESCRIPTION 43
OPERATION 43
DIAGNOSIS AND TESTING - A/C EXPANSION VALVE 43
REMOVAL 44
INSTALLATION 44
A/C EVAPORATOR
DESCRIPTION 44
OPERATION 44
REMOVAL 45
INSTALLATION 46
DISCHARGE LINE
DESCRIPTION 47
REMOVAL 47
INSTALLATION 47
SUCTION LINE
DESCRIPTION 48
REMOVAL 48
INSTALLATION 48
RECEIVER / DRIER
DESCRIPTION 49
OPERATION 49
REMOVAL 49
INSTALLATION 49
SERVICE PORT VALVE CORE
DESCRIPTION 50
OPERATION 50
HEATER CORE
DESCRIPTION 50
OPERATION 50
REMOVAL 50
INSTALLATION 51
REFRIGERANT OIL
DESCRIPTION 51
OPERATION 52
STANDARD PROCEDURE - REFRIGERANT OIL LEVEL 52
REFRIGERANT
DESCRIPTION 53
OPERATION 53

A/C COMPRESSOR

DESCRIPTION

The Visteon HS15 is a fixed displacement type compressor. The compressor uses an integral thermal limiter switch to protect it from overheating. A high pressure relief valve located on the rear of the compressor housing is designed to protect the system from excessive pressure. The system uses polyalkylene glycol synthetic wax-free refrigerant oil PAG (refer to the under hood sticker for correct oil type.

OPERATION

The compressor is driven by the engine through an electric clutch, drive pulley and belt. The compressor is lubricated by refrigerant oil that is circulated throughout the system with the refrigerant. The compressor draws in low-pressure refrigerant vapor from the evaporator through its suction port. It then compresses the refrigerant into a high-pressure, high-temperature refrigerant vapor, which is then pumped to the condenser through the compressor discharge port.

A high pressure relief valve is located on the rear surface of the compressor housing. The high pressure relief valve vents the system when a discharge pressure of 3445 - 4135 kPa (500 - 600 psi) or above is reached. The valve closes with a minimum discharge pressure of 2756 kPa (400 psi) is reached. This prevents damage to the compressor and other system components. The compressor and relief valve cannot be repaired and must be replaced if damaged.

DIAGNOSIS AND TESTING - A/C COMPRESSOR

When investigating an air conditioning related noise, you must first know the conditions when the noise occurs. Some possible conditions are weather, vehicle speed, in or out of gear and engine temperature.

Noises that develop during air conditioning operation can often be misleading. For example, what

A/C COMPRESSOR (Continued)

sounds like a failed front engine bearing or connecting rod may be caused by loose bolts, mounting brackets or loose clutch assembly. Improper drive belt tension can cause a misleading noise when compressor is engaged. The noise may not occur when compressor is disengaged.

Drive belt(s) are speed sensitive. At different engine speeds and depending upon belt tension, belt(s) can develop noises that are mistaken for a compressor noise.

(1) Select a quiet area for testing. Duplicate conditions as much as possible. Switch compressor on and off several times to clearly identify compressor noise. Listen to compressor clutch while engaged and disengaged.

(2) To duplicate high-ambient condition (high-head pressure), restrict air flow through condenser. Install manifold gauge set to make sure discharge pressure doesn't exceed 2070 kPa (300 psi).

(3) Tighten ALL compressor mounting bolts, clutch mounting bolt and clutch coil mounting screws

(4) Check refrigerant hoses for rubbing or interference with other components.

(5) Check refrigerant charge.

(6) Check compressor noise as in Step 1.

(7) If noise still exists, loosen compressor mounting bolts and torque. Repeat Step 1.

(8) If noise continues, replace compressor and repeat Step 1.

REMOVAL

(1) Recover refrigerant from A/C system with R134a refrigerant recovery machine(Refer to 24 - HEATING & AIR CONDITIONING - STANDARD PROCEDURE).

(2) Disconnect negative battery cable.

(3) Remove refrigerant lines from compressor (Fig. 1).

NOTE: Cap lines while system is open to prevent moisture from entering system.

(4) Raise and support vehicle.

(5) Remove drive belt(Refer to 7 - COOLING/ACCESSORY DRIVE/DRIVE BELTS - REMOVAL) or (Refer to 7 - COOLING/ACCESSORY DRIVE/DRIVE BELTS - REMOVAL).

(6) Disconnect compressor clutch wire lead.

(7) Remove three compressor mounting bolts and lower compressor from vehicle.

NOTE: Always drain compressor oil into a graduated container and then refill new compressor with the same amount of NEW refirgerant oil at installation.

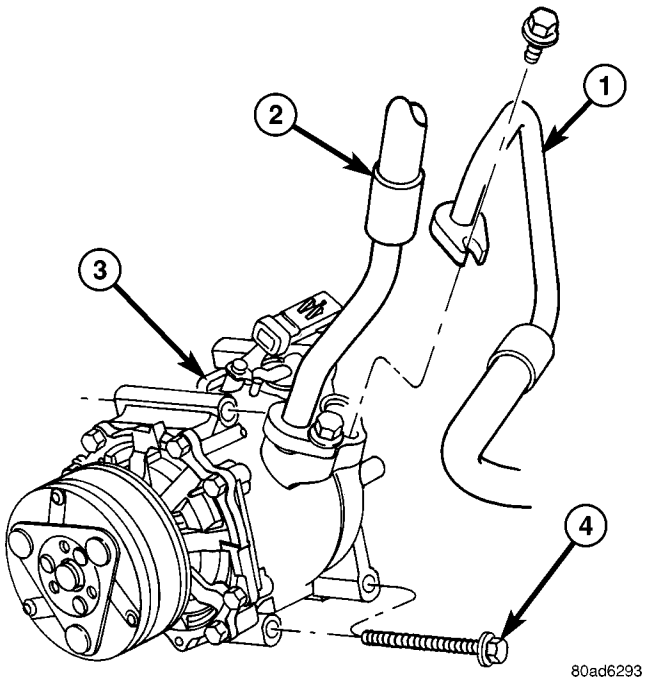

Fig. 1 A/C COMPRESSOR (typical)

1 - DISCHARGE LINE
2 - SUCTION LINE
3 - COMPRESSOR
4 - MOUNTING BOLT

INSTALLATION

NOTE: Always fill compressor with new refrigerant oil.

(1) Lift compressor up on mounting bracket.

(2) Install compressor mounting bolts and tighten to 28.2 N·m (20.8 ft. lbs.).

(3) Connect clutch wiring harness.

(4) Install drive belt(Refer to 7 - COOLING/ACCESSORY DRIVE/DRIVE BELTS - INSTALLATION) or (Refer to 7 - COOLING/ACCESSORY DRIVE/DRIVE BELTS - INSTALLATION).

(5) Remove support and lower vehicle.

(6) Install **new** O-rings and install A/C lines.

(7) Connect negative battery cable.

(8) Evacuate the refrigerant system(Refer to 24 - HEATING & AIR CONDITIONING - STANDARD PROCEDURE).

(9) Recharge the refrigerant system(Refer to 24 - HEATING & AIR CONDITIONING - STANDARD PROCEDURE).

A/C CONDENSER

DESCRIPTION

The condenser is a heat exchanger that allows the high-pressure refrigerant gas being discharged by the

A/C CONDENSER (Continued)

compressor to give up its heat to the air passing over the condenser fins. The condenser is located in front of the vehicles radiator.

OPERATION

When air passes through the condenser fins the refrigerant gives up its heat. The refrigerant then condenses as it leaves the condenser and becomes a high-pressure liquid. The volume of air flowing over the condenser fins is critical for proper air conditioning performance. It is important that there are no objects placed in front of the radiator grille openings or foreign material on the condenser fins that might obstruct proper air flow. The condenser cannot be repaired and if faulty or damaged must be replaced. All factory-installed air seals or shrouds must be installed following service to maintain proper air flow.

REMOVAL

(1) Recover refrigerant from A/C system with an R134a refrigerant recovery machine.
(2) Remove front fascia (Refer to 23 - BODY/EXTERIOR/GRILLE - REMOVAL).
(3) Remove upper radiator support cross-member.
(4) Remove transmission cooler lines.
(5) Remove A/C lines (Fig. 2).

NOTE: Cap lines while system is open to prevent moisture from entering system.

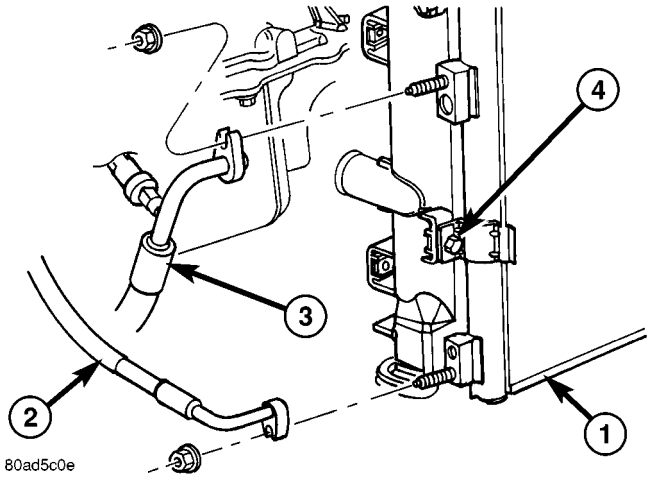

Fig. 2 AIR CONDITIONING LINES

1 - CONDENSER
2 - LIQUID LINE
3 - DISCHARGE LINE
4 - MOUNTING BOLT

(6) Remove two condenser mounting bolts.
(7) Lift condenser up out of the vehicle.

INSTALLATION

(1) Lower condenser into vehicle.
(2) Install condenser mounting bolts.
(3) Install **new** O-rings and install A/C lines.
(4) Install transmission cooler lines.
(5) Install upper radiator support.
(6) Install front fascia (Refer to 23 - BODY/EXTERIOR/GRILLE - INSTALLATION).
(7) Evacuate and charge A/C system.

A/C EXPANSION VALVE

DESCRIPTION

The “H” valve-type thermal expansion valve is located in front of the heater-A/C housing between the liquid and suction lines and the evaporator coil.

The expansion valve is a calibrated unit and cannot be adjusted or repaired. If faulty or damaged, the expansion valve must be replaced.

OPERATION

High pressure high temperature liquid refrigerant from the liquid line passes through the expansion valve orifice. The refrigerant is converted into a low-pressure, low-temperature mixture of liquid and gas before it enters the evaporator coil. A temperature sensor in the expansion valve control head monitors refrigerant temperature leaving the evaporator coil through the suction line. The valve adjusts the orifice size at the liquid line to let the proper amount of refrigerant into the evaporator coil. Controlling refrigerant flow through the evaporator ensures that none of the refrigerant leaving the evaporator is in a liquid state, which could damage the compressor.

DIAGNOSIS AND TESTING - A/C EXPANSION VALVE

The expansion valve is located on the engine side of the dash panel, near the right shock tower.

The expansion valve can fail in three different positions (open, closed or restricted).

In an Open Position: this will result in a noisy compressor or no cooling. The cause can be a broken spring, broken ball or excessive moisture in the A/C system. If the spring or ball are found to be defective, replace the expansion valve. If excessive moisture is found in the A/C system, recycle the refrigerant.

In a Closed Position: There will be low suction pressure and no cooling. This may be caused by a failed power dome or excessive moisture in the A/C system. If the power dome on the expansion valve is found to be defective replace the expansion valve. If excessive moisture is found recycle the refrigerant.

A Restricted Orifice: There will be low suction pressure and no cooling. This may be caused by

A/C EXPANSION VALVE (Continued)

debris in the refrigerant system. If debris is believed to be the cause, recycle the refrigerant and replace the expansion valve and receiver/drier.

REMOVAL

(1) Recover refrigerant from the A/C system with a refrigerant recovery machine.

(2) Remove the A/C plumbing lines at expansion valve.

NOTE: Cap lines while system is open to prevent moisture from entering system.

(3) Remove two retaining bolts from expansion valve and remove valve (Fig. 3).

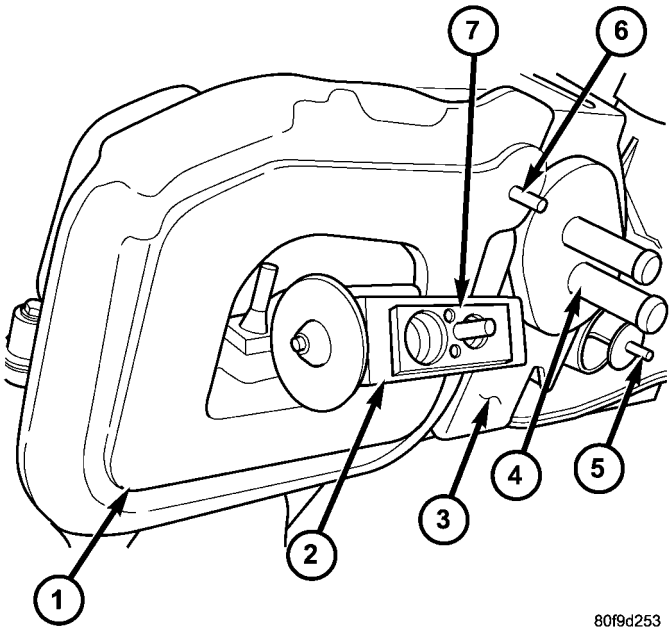

Fig. 3 Evaporator Housing Seals

1 - EVAPORATOR SEAL
2 - H-VALVE
3 - HVAC HOUSING
4 - HEATER CORE CONNECTIONS
5 - HVAC HOUSING MOUNTING STUD
6 - HVAC HOUSING MOUNTING STUD
7 - H-VALVE RETAINER SCREWS (2)

(4) Remove expansion valve.

INSTALLATION

(1) Install a **NEW** O—rings and install valve on evaporator.

(2) Install expansion valve bolts and tighten to 7 N·m (60 in. lbs.).

(3) Install **NEW** O-rings and install A/C lines on expansion valve.

(4) Tighten the bolts to 8 N·m (71 in. lbs.).

(5) Evacuate the HVAC system(Refer to 24 - HEATING & AIR CONDITIONING - STANDARD PROCEDURE).

(6) Charge the HVAC system(Refer to 24 - HEATING & AIR CONDITIONING - STANDARD PROCEDURE).

A/C EVAPORATOR

DESCRIPTION

The evaporator coil (Fig. 4) is located in the heater-A/C housing on the passenger side of the vehicle. The evaporator coil is positioned in the housing so all the air entering the housing passes over the evaporator fins then through the system ducts and outlets. Air passing over the evaporator fins will only be conditioned when the A/C system is on. The evaporator coil cannot be repaired and must be replaced if faulty or damaged.

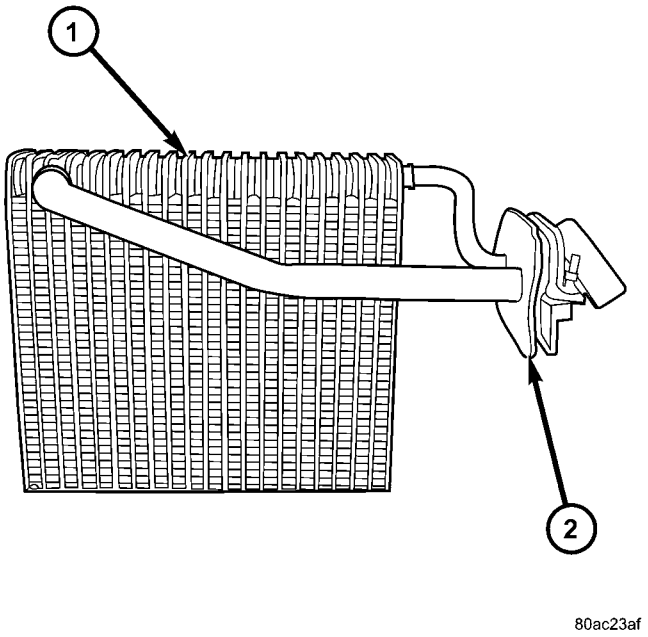

Fig. 4 EVAPORATOR COIL

1 - COIL
2 - HVAC SEAL

OPERATION

Refrigerant enters the evaporator from the expansion valve as a low-temperature low-pressure mixture of liquid and gas. As air flows over the evaporator fins, humidity in the air condenses on the fins and heat from the air is absorbed by the refrigerant. Heat absorption causes the refrigerant to boil and vaporize. The refrigerant becomes a low-pressure gas before it leaves the evaporator.

A/C EVAPORATOR (Continued)

REMOVAL

(1) Disconnect negative battery cable.

(2) Remove HVAC housing from the vehicle(Refer to 24 - HEATING & AIR CONDITIONING/DISTRIBUTION/HVAC HOUSING - REMOVAL).

(3) Disconnect connector from recirculation motor (Fig. 5).

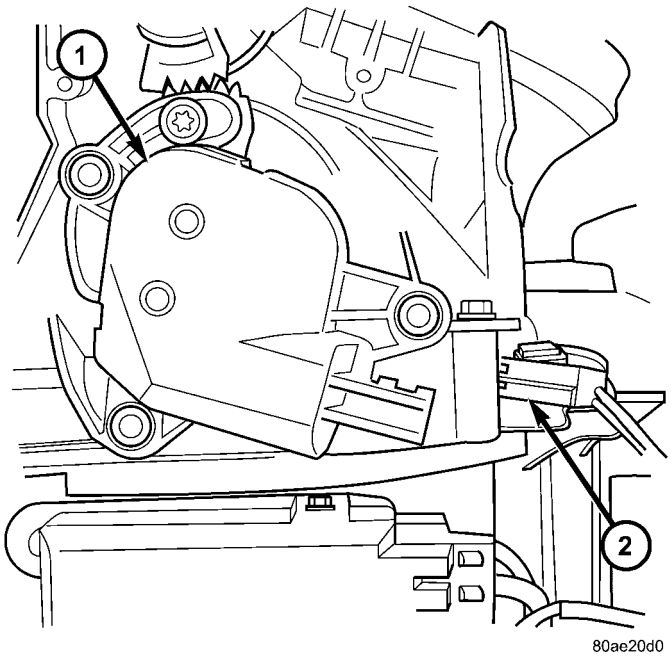

Fig. 5 RECIRCULATION MOTOR

1 - MOTOR
2 - CONNECTOR

(4) Remove wiring harness connector (Fig. 6) from the top of the housing.

(5) Remove seal (Fig. 7) around evaporator coil inlet/outlet.

(6) Remove retaining screw from the top of the housing.

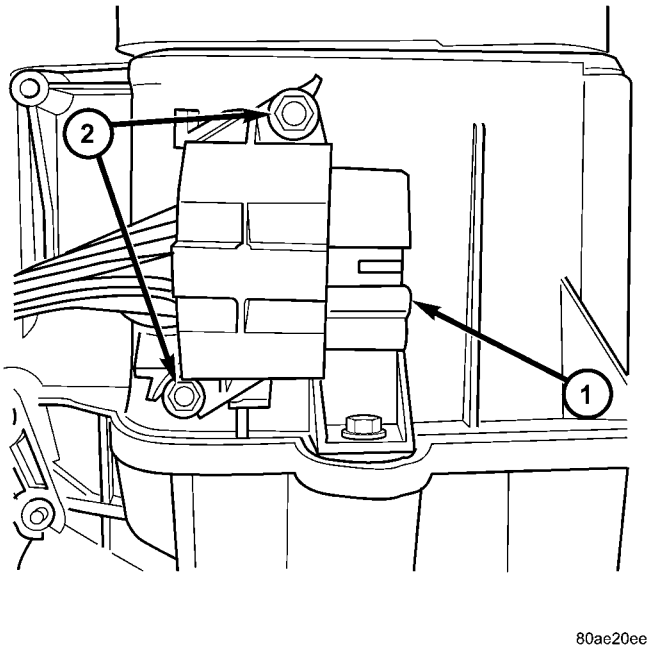

Fig. 6 HVAC HARNESS

1 - CONNECTOR
2 - MOUNTING SCREWS

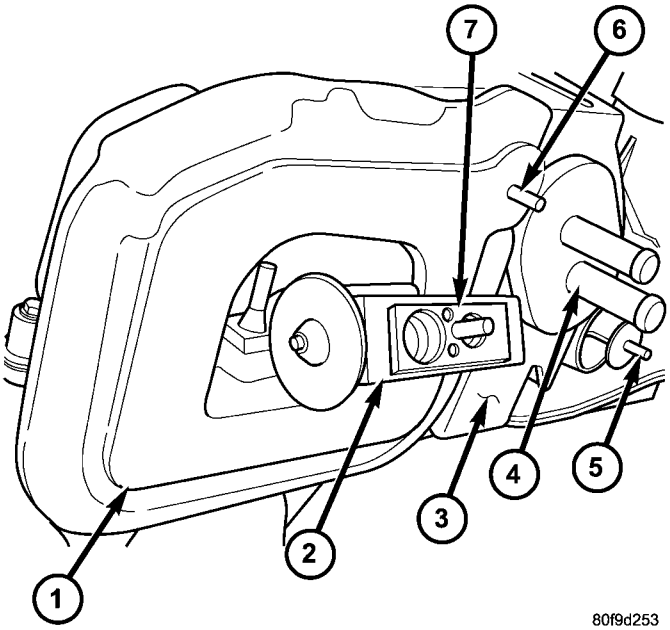

Fig. 7 Evaporator Housing Seals

1 - EVAPORATOR SEAL
2 - H-VALVE
3 - HVAC HOUSING
4 - HEATER CORE CONNECTIONS
5 - HVAC HOUSING MOUNTING STUD
6 - HVAC HOUSING MOUNTING STUD
7 - H-VALVE RETAINER SCREWS (2)

A/C EVAPORATOR (Continued)

(7) Separate the upper housing from the lower (Fig. 8).

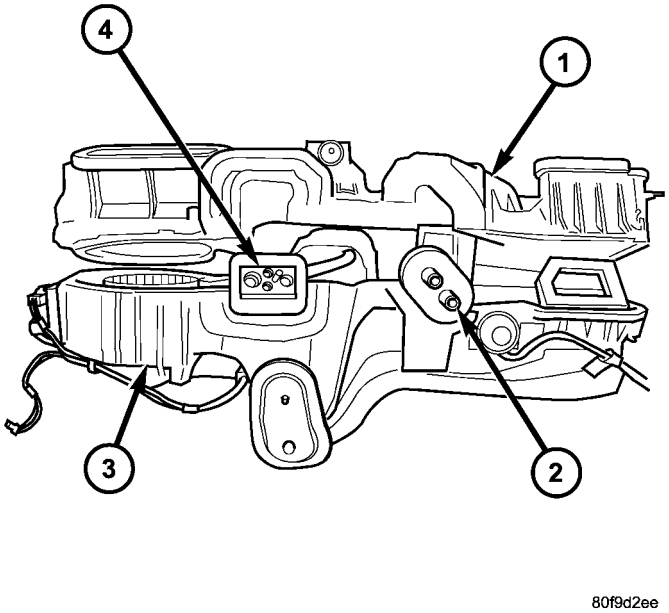

Fig. 8 HVAC HOUSING - NEW H-VALVE CONNECTOR

1 - TOP HOUSING
2 - HEATER CORE
3 - BOTTOM HOUSING
4 - EVAPORATOR CORE

(8) Remove evaporator temperature sensor.
(9) Lift evaporator (Fig. 9) out of bottom housing.
(10) Remove styrofoam seal around evaporator.

INSTALLATION

(1) Install evaporator coil into lower housing.

NOTE: Please be sure to install stryofoam seal on evaporator. Failure to install seal correctly could result in water leakage from HVAC unit into passenger compartment.

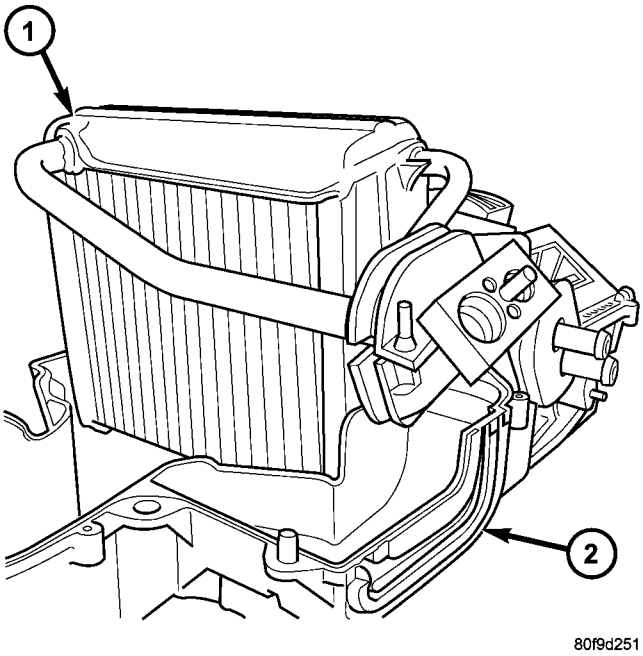

Fig. 9 EVAPORATOR COIL (NEW) H-VALVE

1 - EVAPORATOR HOUSING
2 - BOTTOM HOUSING

(2) Install evaporator temperature sensor(Refer to 24 - HEATING & AIR CONDITIONING/CONTROLS/ EVAPORATOR TEMPERATURE SENSOR - INSTALLATION).

(3) Install upper housing onto lower housing and install screws(Refer to 24 - HEATING & AIR CONDITIONING/DISTRIBUTION/HVAC HOUSING - ASSEMBLY).

(4) Connect recirculation motor connector.
(5) Install evaporator seal.
(6) Install HVAC harness on upper housing.
(7) Install HVAC housing in vehicle(Refer to 24 - HEATING & AIR CONDITIONING/DISTRIBUTION/ HVAC HOUSING - INSTALLATION).

DISCHARGE LINE

DESCRIPTION

The discharge line is made from reinforced rubber with a nylon liner on the inner walls. The line has a light weight aluminum fittings at the compressor and condenser end. The O-rings used to seal the connections are made from a special type of rubber not affected by R-134a refrigerant. O-rings must replaced whenever the line is removed and installed.

CAUTION: Use only O-rings specified for the vehicle. Failure to use correct O-ring will cause the connection to leak.

REMOVAL

(1) Recover refrigerant from A/C system with R134a refrigerant recovery machine(Refer to 24 - HEATING & AIR CONDITIONING - STANDARD PROCEDURE).

(2) Disconnect A/C pressure transducer wire harness.

(3) Remove discharge line (Fig. 10) from A/C condenser.

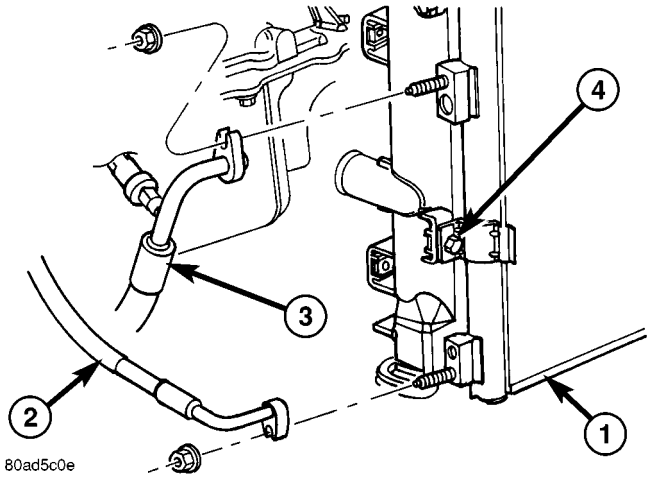

Fig. 10 AIR CONDITIONING LINES

1 - CONDENSER
2 - LIQUID LINE
3 - DISCHARGE LINE
4 - MOUNTING BOLT

(4) Remove the discharge line from A/C compressor (Fig. 11).

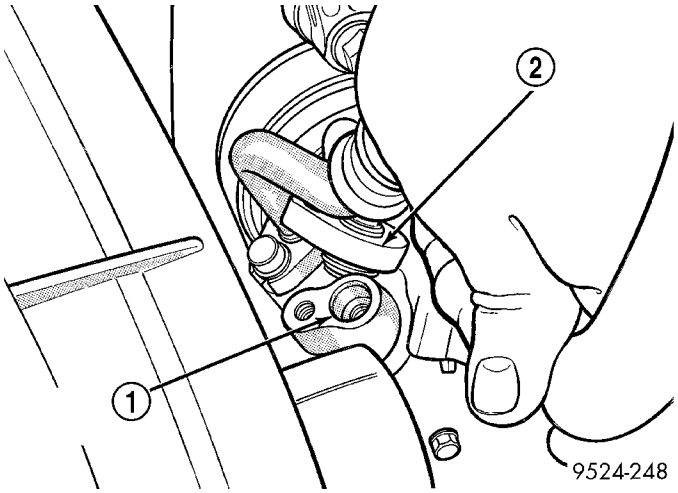

Fig. 11 DISCHARGE LINE

1 - DISCHARGE PORT
2 - DISCHARGE LINE

NOTE: Cap compressor and condenser while system is open to prevent moisture from entering system.

INSTALLATION

NOTE: Always lubricate the NEW O-rings with refrigerant oil as specified for this vehicle.

(1) Install discharge line on the compressor with **new** O-ring and tighten bolt to 22.5 N·m (199 in. lbs.).

(2) Install discharge line on the condenser with **new** O-ring and tighten nut to 22.5 N·m (199 in. lbs.).

(3) Connect pressure transducer wiring harness.

(4) Evacuate the A/C system(Refer to 24 - HEATING & AIR CONDITIONING - STANDARD PROCEDURE).

(5) Recharge the refrigerant system(Refer to 24 - HEATING & AIR CONDITIONING - STANDARD PROCEDURE).

SUCTION LINE

DESCRIPTION

The suction line is made from reinforced rubber. The line has a light weight aluminum fitting at the compressor end and at the expansion valve end. The O-rings must be replaced whenever the line is removed and installed.

CAUTION: Use only O-rings specified for the vehicle. Failure to use the correct O-ring will cause the connection to leak.

REMOVAL

(1) Recover refrigerant from A/C system with R134a refrigerant recovery machine(Refer to 24 - HEATING & AIR CONDITIONING - STANDARD PROCEDURE).

(2) Remove suction line from the compressor.

(3) Remove the shock tower to suction line bracket bolt.

(4) Remove suction line (Fig. 12) or (Fig. 13)from expansion valve.

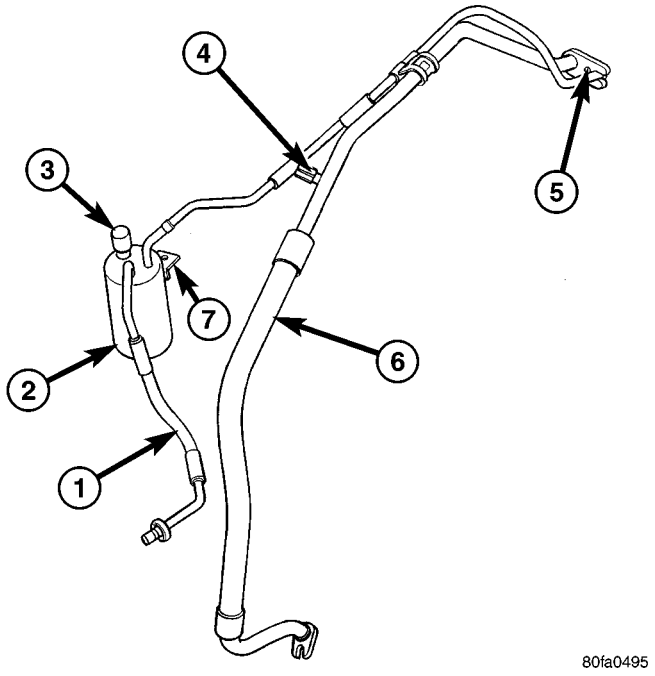

Fig. 12 RECEIVER DRIER AND LINES

1 - DISCHARGE LINE
2 - RECEIVER DRIER
3 - SERVICE CHARGE PORT - HIGH SIDE
4 - SERVICE CHARGE PORT - LOW SIDE
5 - EVAPORATOR - H0VLAVE CONNECTOR
6 - SUCTION LINE
7 - RECEIVER DRIER MOUNTING BRACKET

NOTE: Cap compressor and expansion valve while system is open to prevent moisture from entering system.

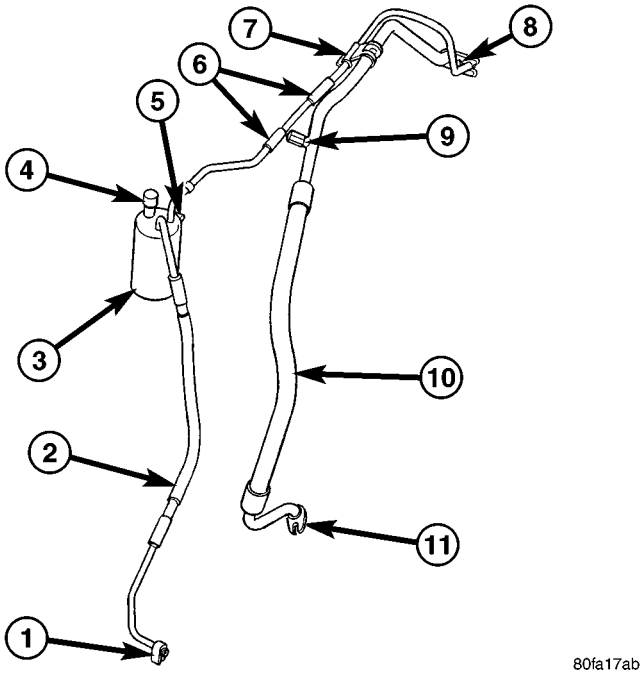

Fig. 13 Receiver Drier with Lines

1 - A/C LINE CONNECTION TO CONDENSER
2 - A/C HIGH SIDE LINE
3 - RECEIVER DRIER
4 - A/C SERVICE PORT
5 - RECEIVER DRIER MOUNTING FLANGE
6 - A/C LINE RETAINER CLIPS
7 - A/C LINE RETAINER CLIP
8 - MOUNTING FLANGE TO EVAPORATOR
9 - A/C SERVICE PORT
10 - SUCTION LINE TO COMPRESSOR
11 - SUCTION LINE MOUNTING FLANGE

INSTALLATION

(1) Install suction line to expansion valve with a**NEW** O-ring and tighten to 8 N·m (71 in. lbs.).

(2) Install suction line to compressor with **NEW** O-ring and tighten bolt to 22.5 N·m (199 in. lbs.).

(3) Install the shock tower to suction line bracket bolt and tighten to 6.8 N·m (60.1 in. lbs.)

(4) Evacuate the refrigerant system(Refer to 24 - HEATING & AIR CONDITIONING - STANDARD PROCEDURE).

(5) Recharge the refrigerant system(Refer to 24 - HEATING & AIR CONDITIONING - STANDARD PROCEDURE).

RECEIVER / DRIER

DESCRIPTION

The receiver/drier is mounted on the right side of the engine compartment. It is part of the liquid line, between the condenser outlet and evaporator inlet.

OPERATION

High-pressure liquid refrigerant from the condenser flows into the receiver/drier. The receiver/drier filters the refrigerant to prevent foreign material from contaminating the expansion valve. A desiccant bag inside absorbs any moisture which may have become trapped in refrigerant system. In periods of high demand air conditioner operation, it acts as a reservoir to store surplus refrigerant. If the receiver/drier is faulty, damaged, contaminated or the system has been left open to the atmosphere for an undetermined period, it must be replaced.

REMOVAL

(1) Recover the refrigerant from A/C system with a refrigerant recovery machine(Refer to 24 - HEATING & AIR CONDITIONING - STANDARD PROCEDURE).

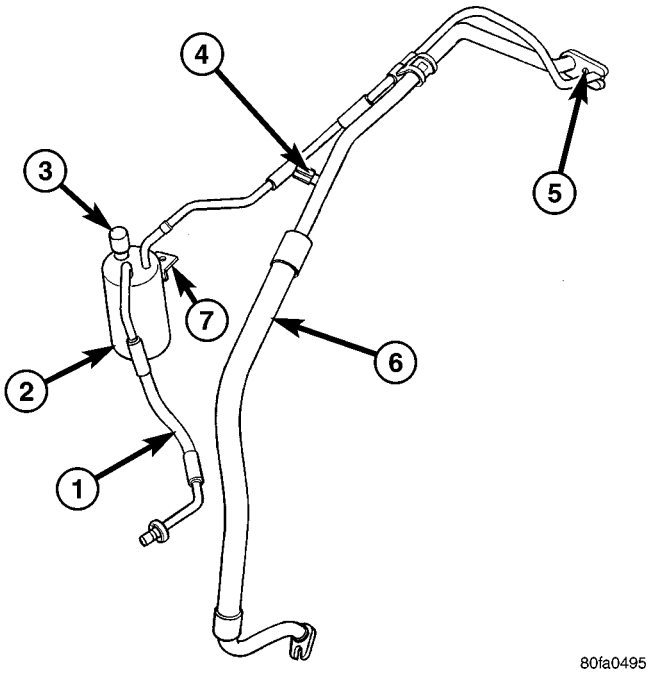

Fig. 14 RECEIVER DRIER AND LINES

1 - DISCHARGE LINE
2 - RECEIVER DRIER
3 - SERVICE CHARGE PORT - HIGH SIDE
4 - SERVICE CHARGE PORT - LOW SIDE
5 - EVAPORATOR - H0VLAVE CONNECTOR
6 - SUCTION LINE
7 - RECEIVER DRIER MOUNTING BRACKET

(2) Remove liquid line from condenser(Refer to 24 - HEATING & AIR CONDITIONING/PLUMBING/A/C DISCHARGE LINE - REMOVAL).

(3) Remove liquid line from expansion valve.

(4) Remove receiver/drier bracket bolt (Fig. 14) or (Fig. 15)at base of receiver/drier and remove the receiver/drier and line.

NOTE: Cap condenser and evaporator while system is open to prevent moisture from entering system.

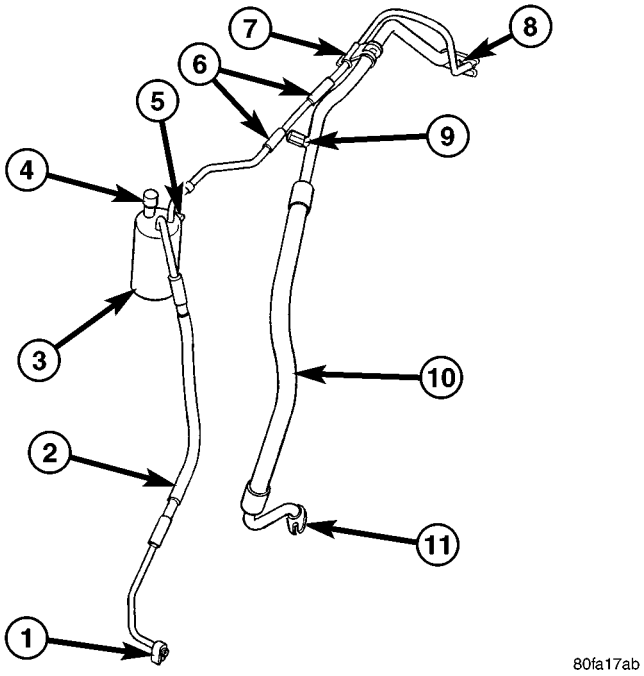

Fig. 15 Receiver Drier with Lines

1 - A/C LINE CONNECTION TO CONDENSER
2 - A/C HIGH SIDE LINE
3 - RECEIVER DRIER
4 - A/C SERVICE PORT
5 - RECEIVER DRIER MOUNTING FLANGE
6 - A/C LINE RETAINER CLIPS
7 - A/C LINE RETAINER CLIP
8 - MOUNTING FLANGE TO EVAPORATOR
9 - A/C SERVICE PORT
10 - SUCTION LINE TO COMPRESSOR
11 - SUCTION LINE MOUNTING FLANGE

INSTALLATION

(1) Install receiver/drier in bracket and tighten mounting bolt.

(2) Install liquid line to expansion valve with a**NEW** O-ring and tighten to 8 N·m (71 in. lbs.).

(3) Install liquid line to condenser with **NEW** O-rings and tighten nut to 19.2 N·m (170 in. lbs.).

(4) Evacuate the refrigerant system(Refer to 24 - HEATING & AIR CONDITIONING - STANDARD PROCEDURE).

(5) Recharge the refrigerant system(Refer to 24 - HEATING & AIR CONDITIONING - STANDARD PROCEDURE).

SERVICE PORT VALVE CORE

DESCRIPTION

The high pressure service port is located on the receiver drier. The low pressure service port is located on the suction line, near the right strut tower.

Each of the service ports has a threaded plastic protective cap installed over it from the factory. After servicing the refrigerant system, always reinstall both of the service port caps.

OPERATION

The two refrigerant system service ports are used to charge/recover/recycle/evacuate and test the air conditioning refrigerant system. Unique service port coupler sizes are used on the R-134a system to ensure the refrigerant system is not accidentally contaminated with R-12 refrigerant or refrigerant system service equipment.

HEATER CORE

DESCRIPTION

The heater core (Fig. 16) is located in the HVAC housing. The core is a heat exchanger made of rows of tubes and fins.

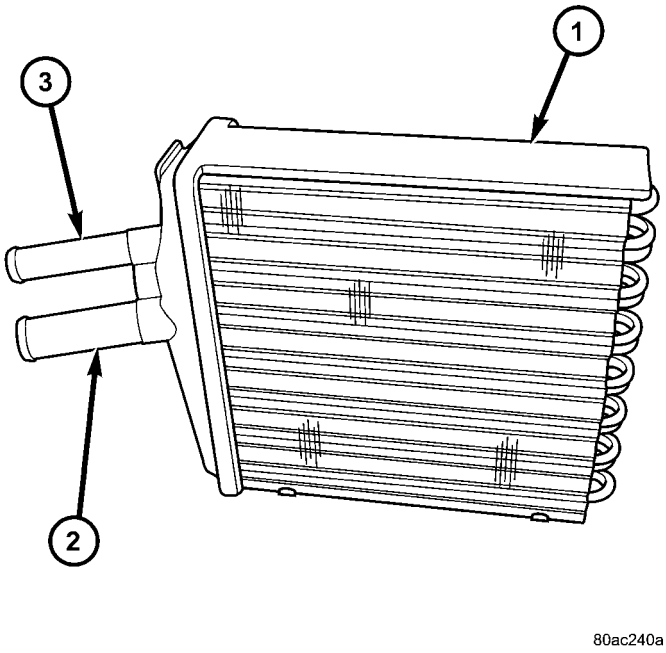

Fig. 16 HEATER CORE

1 - CORE
2 - INLET TUBE
3 - OUTLET TUBE

OPERATION

Engine coolant is circulated through heater hoses to the heater core. As coolant flows through the heater core, heat is transferred to the heater core fins and tubes. Air directed through the heater core fins, picks up the heat. The temperature control door controls heater output air temperature by controlling the air flowing through the HVAC housing. The heater core cannot be repaired and must be replaced if damaged.

REMOVAL

(1) Disconnect negative battery cable.

(2) Remove HVAC housing from the vehicle(Refer to 24 - HEATING & AIR CONDITIONING/DISTRIBUTION/HVAC HOUSING - REMOVAL).

(3) Disconnect connector from recirculation motor (Fig. 17).

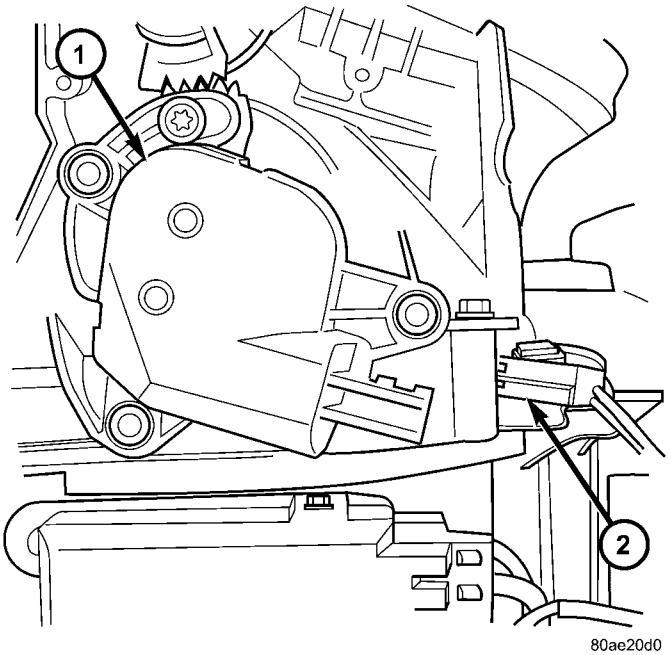

Fig. 17 RECIRCULATION MOTOR

1 - MOTOR
2 - CONNECTOR

HEATER CORE (Continued)

(4) Remove wiring harness connector (Fig. 18) from the top of the housing.

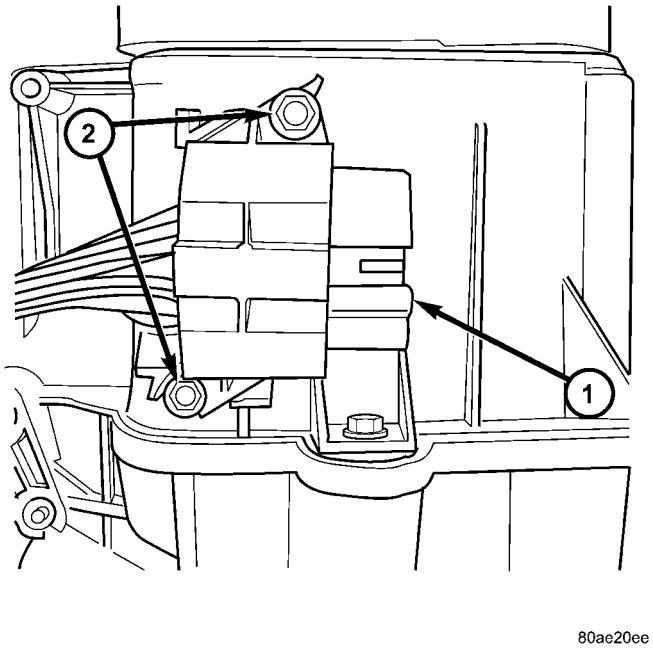

Fig. 18 HVAC HARNESS

1 - CONNECTOR
2 - MOUNTING SCREWS

(5) Remove seal (Fig. 19) around evaporator coil inlet/outlet.

(6) Remove retaining screw from the top of the housing.

(7) Separate the upper from the housing from the lower (Fig. 20).

(8) Lift heater core (Fig. 21) out of lower housing.

INSTALLATION

(1) Install new heater core into lower housing.

(2) Install upper housing onto lower housing and install screws.

(3) Install evaporator seal

(4) Install HVAC harness on upper housing

(5) Connect recirculation motor connector.

(6) Install HVAC housing(Refer to 24 - HEATING & AIR CONDITIONING/DISTRIBUTION/HVAC HOUSING - INSTALLATION).

REFRIGERANT OIL

DESCRIPTION

The refrigerant oil used in R-134a refrigerant systems is a synthetic-based, PolyAlkylene Glycol (PAG), wax-free lubricant. Mineral-based R-12 refrigerant oils are not compatible with PAG oils, and should never be introduced to an R-134a refrigerant system.

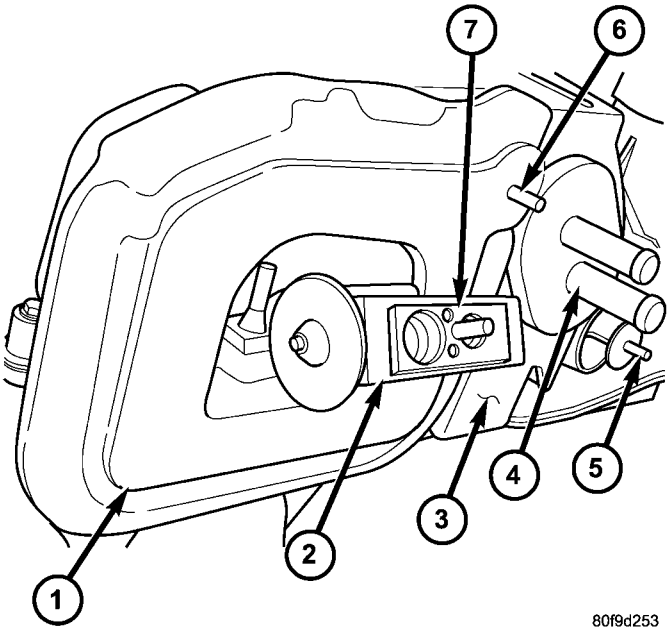

Fig. 19 Evaporator Housing Seals

1 - EVAPORATOR SEAL
2 - H-VALVE
3 - HVAC HOUSING
4 - HEATER CORE CONNECTIONS
5 - HVAC HOUSING MOUNTING STUD
6 - HVAC HOUSING MOUNTING STUD
7 - H-VALVE RETAINER SCREWS (2)

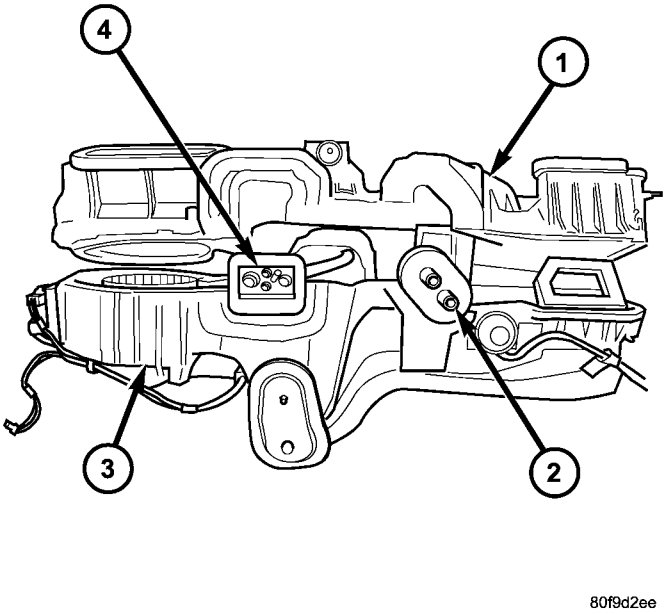

Fig. 20 HVAC HOUSING - NEW H-VALVE CONNECTOR

1 - TOP HOUSING
2 - HEATER CORE
3 - BOTTOM HOUSING
4 - EVAPORATOR CORE

REFRIGERANT OIL (Continued)

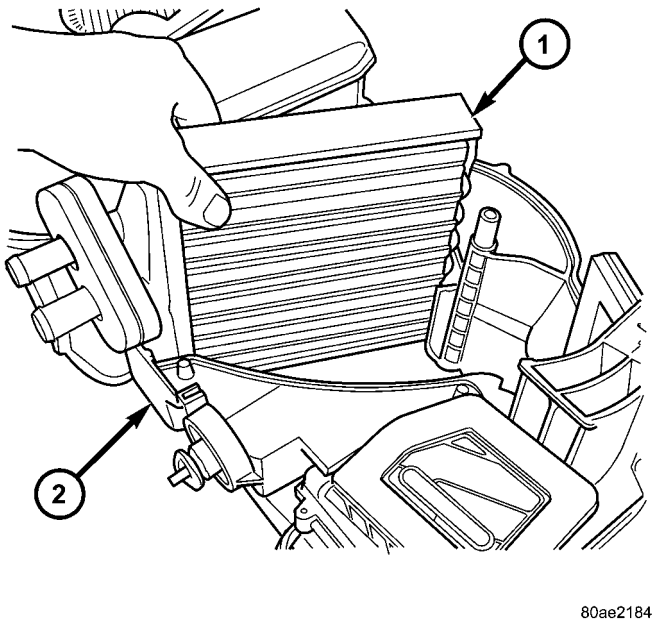

Fig. 21 HEATER CORE

1 - HEATER CORE
2 - LOWER HOUSING

There are different PAG oils available, and each contains a different additive package. The Visteon HS15 compressor used in this vehicle is designed to use a PAG refrigerant oil. Use only refrigerant oil of this same type to service the refrigerant system (always refer to the specification tag included with the replacement compressor or the under hood specification tag).

OPERATION

After performing any refrigerant recovery or recycling operation, always replenish the refrigerant system with the same amount of the recommended refrigerant oil as was removed. Too little refrigerant oil can cause compressor damage and too much can reduce air conditioning system performance.

PAG refrigerant oil is much more hygroscopic than mineral oil, and will absorb any moisture it comes into contact with even moisture in the air. The PAG oil container should always be kept tightly capped until it is ready to be used. Recap the oil container immediately after use to prevent moisture contamination.

STANDARD PROCEDURE - REFRIGERANT OIL LEVEL

It is important to have the correct amount of lubricant in the a/c system to ensure proper lubrication of the compressor. Too little lubricant will result in damage to the compressor. Too much lubricant will reduce the cooling capacity of the system and consequently result in higher discharge air temperatures.

The lubricant used in the compressor is polyalkalene glycol PAG lubricant. Only the refrigerant lubricant approved for use with this vehicle (Visteon/ Mopar PAG oil) should be used to service the system. Do not use any other lubricant. The lubricant container should be kept tightly capped until it is ready for use. Refrigerant lubricant will quickly absorb any moisture it comes in contact with.

It is not necessary to check or add lubricant unless it has been lost. Lubricant loss at the leak point will be evident by the presence of a wet, shiny surface around the leak.

REFRIGERANT OIL LEVEL CHECK

When an air conditioning system is first assembled, all components (except the compressor) are refrigerant oil free. After the system has been charged with (R-134a) refrigerant and operated, the oil in the compressor is dispersed through the lines and components. The evaporator, condenser, and receiver/drier will retain a significant amount of oil. Refer to the A/C Component Refrigerant Oil Capacities table. When a component is replaced, the specified amount of refrigerant oil must be added. When the compressor is replaced, the amount of oil that is retained in the rest of the system must be drained from the replacement compressor. The oil capacity of the system, minus the amount of oil still in the remaining components (refer to the oil capacity chart below) can be measured and poured into the suction port of the compressor. When a line or component has ruptured and oil has escaped, the receiver/drier must be replaced along with the ruptured part.

Example: On an A/C system the evaporator retains 60 ml. (2 oz.). The condenser retains 30 ml. (1 oz.) of oil, and system capacity may be 150 ml. (5.00 oz.) of oil.

150 ml. minus 90 ml. equals 60 ml. (2.00 oz.).

A/C COMPONENT REFRIGERANT OIL CAPACITIES

COMPONENT NAME	ml.	oz.
Total Air Conditioning System	150 ml.	5.00 oz.
Condenser	30 ml.	1.00 oz.
Evaporator	59 ml.	2.00 oz.
Receiver/Drier	30 ml.	1.00 oz.
Line Blown	44 ml.	1.50 oz.
Compressor	Drain and measure the oil from the old compressor. See text.	

REFRIGERANT OIL (Continued)

CAUTION: The refrigerant oil used in a R-134a A/C system is unique. Use only oils which were designed to work with R-134a refrigerant. The oil designated for this vehicle is (Visteon/Mopar PAG (polyalkalene glycol).

VERIFY REFRIGERANT LUBRICANT LEVEL

(1) Recover refrigerant from the system.

(2) Disconnect refrigerant lines from the a/c compressor. Cap open lines to prevent moisture from entering the system.

(3) Remove compressor from the vehicle.

(4) From the suction and discharge ports on the compressor, drain the lubricant from the compressor.

(5) Add the system capacity minus the capacity of the components that have not been replaced. Refer to the A/C Component Refrigerant Oil Capacities chart above. Add lubricant through the suction and discharge ports on compressor. This is not to exceed 150 ml. (5.00 oz.) in total.

(6) Install the compressor and connect the refrigerant lines. Then evacuate and charge refrigerant system.

(7) Most reclaim/recycling equipment will measure the lubricant being removed. This amount of lubricant should be added back to the system. If a new compressor is being installed, drain lubricant from old compressor, measure the amount drained and discard old lubricant. Drain the lubricant from the new compressor into a clean container. Return the amount of lubricant measured from the old compressor, plus the amount reclaimed from the system back into the new compressor.

REFRIGERANT

DESCRIPTION

The refrigerant used in this air conditioning system is a HydroFluoroCarbon (HFC), type R-134a. Unlike R-12, which is a ChloroFluoroCarbon (CFC), R-134a refrigerant does not contain ozone-depleting chlorine. R-134a refrigerant is a non-toxic, non-flammable, clear, and colorless liquefied gas.

Even though R-134a does not contain chlorine, it must be reclaimed and recycled just like CFC-type refrigerants. This is because R-134a is a greenhouse gas and can contribute to global warming.

OPERATION

R-134a refrigerant is not compatible with R-12 refrigerant in an air conditioning system. Even a small amount of R-12 added to an R-134a refrigerant system will cause compressor failure, refrigerant oil sludge or poor air conditioning system performance. In addition, the PolyAlkylene Glycol (PAG) synthetic refrigerant oils used in an R-134a refrigerant system are not compatible with the mineral-based refrigerant oils used in an R-12 refrigerant system.

R-134a refrigerant system service ports, service tool couplers and refrigerant dispensing bottles have all been designed with unique fittings to ensure that an R-134a system is not accidentally contaminated with the wrong refrigerant (R-12). There are also labels posted in the engine compartment of the vehicle and on the compressor identifying to service technicians that the air conditioning system is equipped with R-134a.

EMISSIONS CONTROL

TABLE OF CONTENTS

page

EMISSIONS CONTROL
DESCRIPTION
DESCRIPTION - VEHICLE EMISSION CONTROL INFORMATION LABEL 1
DESCRIPTION - TRIP DEFINITION 1
DESCRIPTION - MONITORED COMPONENT . 1
OPERATION - NON-MONITORED CIRCUITS . . 5
DESCRIPTION - MONITORED SYSTEMS 6
DESCRIPTION - HIGH AND LOW LIMITS 9
OPERATION
OPERATION - SYSTEM 9
DRB III® STATE DISPLAY TEST MODE 10
EVAPORATIVE EMISSIONS 11
ON-BOARD DIAGNOSTICS 23

EMISSIONS CONTROL

DESCRIPTION

DESCRIPTION - VEHICLE EMISSION CONTROL INFORMATION LABEL

All models have a Vehicle Emission Control Information (VECI) Label. Chrysler permanently attaches the label in the engine compartment. It cannot be removed without defacing information and destroying the label.

The label contains the vehicle's emission specifications and vacuum hose routings. All hoses must be connected and routed according to the label.

DESCRIPTION - TRIP DEFINITION

A "Trip" means vehicle operation (following an engine-off period) of duration and driving mode such that all components and systems are monitored at least once by the diagnostic system. The monitors must successfully pass before the PCM can verify that a previously malfunctioning component is meeting the normal operating conditions of that component. For misfire or fuel system malfunction, the MIL may be extinguished if the fault does not recur when monitored during three subsequent sequential driving cycles in which conditions are similar to those under which the malfunction was first determined.

Anytime the MIL is illuminated, a DTC is stored. The DTC can self erase only after the MIL has been extinguished. Once the MIL is extinguished, the PCM must pass the diagnostic test for the most recent DTC for 40 warm-up cycles (80 warm-up cycles for the Fuel System Monitor and the Misfire Monitor). A warm-up cycle can best be described by the following:

- The engine must be running
- A rise of 40°F in engine temperature must occur from the time when the engine was started
- Engine coolant temperature must crossover 160°F
- A "driving cycle" that consists of engine start up and engine shut off.

Once the above conditions occur, the PCM is considered to have passed a warm-up cycle. Due to the conditions required to extinguish the MIL and erase the DTC, it is most important that after a repair has been made, all DTC's be erased and the repair verified by running 1–good trip.

DESCRIPTION - MONITORED COMPONENT

There are several components that will affect vehicle emissions if they malfunction. If one of these components malfunctions the Malfunction Indicator Lamp (Check Engine) will illuminate.

Some of the component monitors are checking for proper operation of the part. Electrically operated components now have input (rationality) and output (functionality) checks as well as continuity tests (opens/shorts). Previously, a component like the Throttle Position sensor (TPS) was checked by the PCM for an open or shorted circuit. If one of these conditions occurred, a DTC was set. Now there is a check to ensure that the component is working. This is done by watching for a TPS indication of a greater or lesser throttle opening than MAP and engine rpm indicate. In the case of the TPS, if engine vacuum is high and engine rpm is 1600 or greater and the TPS indicates a large throttle opening, a DTC will be set. The same applies to low vacuum and 1600 rpm.

Any component that has an associated limp in will set a fault after 1 trip with the malfunction present.

Refer to the Diagnostic Trouble Codes Description Charts in this section and the appropriate Powertrain Diagnostic Procedure Manual for diagnostic procedures.

The following is a list of the monitored components:

EMISSIONS CONTROL (Continued)

- Catalyst Monitor
- Comprehensive Components
- EGR (if equipped)
- Fuel Control (rich/lean)
- Oxygen Sensor Monitor
- Oxygen Sensor Heater Monitor
- Purge
- Misfire
- Natural Vacuum Leak Detection (NVLD)

COMPREHENSIVE COMPONENTS

Along with the major monitors, OBD II requires that the diagnostic system monitor any component that could affect emissions levels. In many cases, these components were being tested under OBD I. The OBD I requirements focused mainly on testing emissions-related components for electrical opens and shorts.

However, OBD II also requires that inputs from powertrain components to the PCM be tested for **rationality**, and that outputs to powertrain components from the PCM be tested for **functionality**. Methods for monitoring the various Comprehensive Component monitoring include:

(1) Circuit Continuity
- Open
- Shorted high
- Shorted to ground

(2) Rationality or Proper Functioning
- Inputs tested for rationality
- Outputs tested for functionality

NOTE: Comprehensive component monitors are continuous. Therefore, enabling conditions do not apply. All will set a DTC and illuminate the MIL in 1-trip.

Input Rationality—While input signals to the PCM are constantly being monitored for electrical opens and shorts, they are also tested for rationality. This means that the input signal is compared against other inputs and information to see if it makes sense under the current conditions.

PCM sensor inputs that are checked for rationality include:
- Manifold Absolute Pressure (MAP) Sensor
- Oxygen Sensor (O2S) (slow response)
- Engine Coolant Temperature (ECT) Sensor
- Camshaft Position (CMP) Sensor
- Vehicle Speed Sensor
- Crankshaft Position (CKP) Sensor
- Intake Air Temperature (IAT) Sensor
- Throttle Position (TPS) Sensor
- Ambient/Battery Temperature Sensors
- Power Steering Switch
- Oxygen Sensor Heater
- Engine Controller
- Brake Switch
- Natural Vacuum Leak Detection (NVLD)
- P/N Switch
- Trans Controls

Output Functionality—PCM outputs are tested for functionality in addition to testing for opens and shorts. When the PCM provides a voltage to an output component, it can verify that the command was carried out by monitoring specific input signals for expected changes. For example, when the PCM commands the Idle Air Control (IAC) Motor to a specific position under certain operating conditions, it expects to see a specific (target) idle speed (RPM). If it does not, it stores a DTC.

PCM outputs monitored for functionality include:
- Fuel Injectors
- Ignition Coils
- Torque Converter Clutch Solenoid
- Idle Air Control
- Purge Solenoid
- EGR Solenoid
- Radiator Fan Control
- Trans Controls

OXYGEN SENSOR (O2S) MONITOR

DESCRIPTION—Effective control of exhaust emissions is achieved by an oxygen feedback system. The most important element of the feedback system is the O2S. The O2S is located in the exhaust path. Once it reaches operating temperature 300° to 350°C (572° to 662°F), the sensor generates a voltage that is inversely proportional to the amount of oxygen in the exhaust. When there is a large amount of oxygen in the exhaust caused by a lean condition, misfire or exhaust leak, the sensor produces a low voltage, below 450 mV. When the oxygen content is lower, caused by a rich condition, the sensor produces a higher voltage, above 450mV.

The information obtained by the sensor is used to calculate the fuel injector pulse width. The PCM is programmed to maintain the optimum air/fuel ratio. At this mixture ratio, the catalyst works best to remove hydrocarbons (HC), carbon monoxide (CO) and nitrous oxide (NOx) from the exhaust.

The O2S is also the main sensing element for the EGR, Catalyst and Fuel Monitors, and purge.

The O2S may fail in any or all of the following manners:
- Slow response rate (Big Slope)
- Reduced output voltage (Half Cycle)
- Heater Performance

Slow Response Rate (Big Slope)—Response rate is the time required for the sensor to switch from lean to rich signal output once it is exposed to a richer than optimum A/F mixture or vice versa. As the PCM adjusts the air/fuel ratio, the sensor must

EMISSIONS CONTROL (Continued)

be able to rapidly detect the change. As the sensor ages, it could take longer to detect the changes in the oxygen content of the exhaust gas. The rate of change that an oxygen sensor experiences is called 'Big Slope'. The PCM checks the oxygen sensor voltage in increments of a few milliseconds.

Reduced Output Voltage (Half Cycle)—The output voltage of the O2S ranges from 0 to 1 volt. A good sensor can easily generate any output voltage in this range as it is exposed to different concentrations of oxygen. To detect a shift in the A/F mixture (lean or rich), the output voltage has to change beyond a threshold value. A malfunctioning sensor could have difficulty changing beyond the threshold value. Many times the condition is only temporey and the sensor will recover. Under normal conditions the voltage signal surpasses the threshold, and a counter is incremented by one. This is called the Half Cycle Counter.

Heater Performance—The heater is tested by a separate monitor. Refer to the Oxygen Sensor Heater Monitor.

OPERATION—As the Oxygen Sensor signal switches, the PCM monitors the half cycle and big slope signals from the oxygen sensor. If during the test neither counter reaches a predetermined value, a malfunction is entered and a Freeze Frame is stored. Only one counter reaching its predetermined value is needed for the monitor to pass.

The Oxygen Sensor Signal Monitor is a two trip monitor that is tested only once per trip. When the Oxygen Sensor fails the test in two consecutive trips, the MIL is illuminated and a DTC is set. The MIL is extinguished when the Oxygen Sensor monitor passes in three consecutive trips. The DTC is erased from memory after 40 consecutive warm-up cycles without test failure.

Enabling Conditions—The following conditions must typically be met for the PCM to run the oxygen sensor monitor:

- Battery voltage
- Engine temperature
- Engine run time
- Engine run time at a predetermined speed
- Engine run time at a predetermined speed and throttle opening
- Transmission in gear (automatic only)
- Fuel system in Closed Loop
- Long Term Adaptive (within parameters)
- Power Steering Switch in low PSI (no load)
- Engine at idle
- Fuel level above 15%
- Ambient air temperature
- Barometric pressure
- Engine RPM within acceptable range of desired idle
- Closed throttle speed

Pending Conditions—The Task Manager typically does not run the Oxygen Sensor Signal Monitor if overlapping monitors are running or the MIL is illuminated for any of the following:

- Misfire Monitor
- Front Oxygen Sensor and Heater Monitor
- MAP Sensor
- Vehicle Speed Sensor
- Engine Coolant Temperature Sensor
- Throttle Position Sensor
- Engine Controller Self Test Faults
- Cam or Crank Sensor
- Injector and Coil
- Idle Air Control Motor
- EVAP Electrical
- EGR Solenoid Electrical
- Intake Air Temperature
- 5 Volt Feed

Conflict—The Task Manager does not run the Oxygen Sensor Monitor if any of the following conditions are present:

- A/C ON (A/C clutch cycling temporarily suspends monitor)
- Purge flow in progress
- Ethenal content learn is taking place and the ethenal used once flag is set

Suspend—The Task Manager suspends maturing a fault for the Oxygen Sensor Monitor if an of the following are present:

- Oxygen Sensor Heater Monitor, Priority 1
- Misfire Monitor, Priority 2

OXYGEN SENSOR HEATER MONITOR (NGC)

DESCRIPTION—If the Oxygen sensor (O2S) DTC as well as a O2S heater DTC is present, the O2S Heater DTC MUST be repaired first. After the O2S Heater is repaired, verify that the sensor circuit is operating correctly.

The voltage reading taken from the O2S are very temperature sensitive. The readings taken from the O2S are not accurate below 300 degrees C. Heating the O2S is done to allow the engine controller to shift to closed loop control as soon as possible. The heating element used to heat the O2S must be tested to ensure that it is heating the sensor properly. Starting with the introduction on the NGC module the strategy for checking the heater circuit has changed. The heater resistance is checked by the NGC almost immediately after the engine is started. The same O2S heater return pin used to read the heater resistance is capable of detecting an open circuit, a shorted high or shorted low condition.

OXYGEN SENSOR HEATER MONITOR (SBEC)

DESCRIPTION—If there is an oxygen sensor (O2S) DTC as well as a O2S heater DTC, the O2S

heater fault MUST be repaired first. After the O2S fault is repaired, verify that the heater circuit is operating correctly.

The voltage readings taken from the O2S are very temperature sensitive. The readings are not accurate below 300°C. Heating of the O2S is done to allow the engine controller to shift to closed loop control as soon as possible. The heating element used to heat the O2S must be tested to ensure that it is heating the sensor properly.

The heater element itself is not tested directly. The sensor output is used to test the heater by isolating the effect of the heater element on the O2S output voltage from the other effects. The resistance is normally between 100 ohms and 4.5 megaohms. When oxygen sensor temperature increases, the resistance in the internal circuit decreases. The PCM sends a 5 volts biased signal through the oxygen sensors to ground this monitoring circuit. As the temperature increases, resistance decreases and the PCM detects a lower voltage at the reference signal. Inversely, as the temperature decreases, the resistance increases and the PCM detects a higher voltage at the reference signal. The O2S circuit is monitored for a drop in voltage.

OPERATION—The Oxygen Sensor Heater Monitor begins after the ignition has been turned OFF and the O2 sensors have cooled. The PCM sends a 5 volt bias to the oxygen sensor every 1.6 seconds. The PCM keeps it biased for 35 ms each time. As the sensor cools down, the resistance increases and the PCM reads the increase in voltage. Once voltage has increased to a predetermined amount, higher than when the test started, the oxygen sensor is cool enough to test heater operation.

When the oxygen sensor is cool enough, the PCM energizes the ASD relay. Voltage to the O2 sensor begins to increase the temperature. As the sensor temperature increases, the internal resistance decreases. The PCM continues biasing the 5 volt signal to the sensor. Each time the signal is biased, the PCM reads a voltage decrease. When the PCM detects a voltage decrease of a predetermined value for several biased pulses, the test passes.

The heater elements are tested each time the engine is turned OFF if all the enabling conditions are met. If the monitor fails, the PCM stores a maturing fault and a Freeze Frame is entered. If two consecutive tests fail, a DTC is stored. Because the ignition is OFF, the MIL is illuminated at the beginning of the next key cycle, after the 2nd failure.

Enabling Conditions—The following conditions must be met for the PCM to run the oxygen sensor heater test:

- Engine run time of at least 5.1 minutes
- Key OFF power down
- Battery voltage of at least 10 volts
- Sufficient Oxygen Sensor cool down

Pending Conditions—There are not conditions or situations that prompt conflict or suspension of testing. The oxygen sensor heater test is not run pending resolution of MIL illumination due to oxygen sensor failure.

Suspend—There are no conditions which exist for suspending the Heater Monitor.

CATALYST MONITOR

To comply with clean air regulations, vehicles are equipped with catalytic converters. These converters reduce the emission of hydrocarbons, oxides of nitrogen and carbon monoxide.

Normal vehicle miles or engine misfire can cause a catalyst to decay. A meltdown of the ceramic core can cause a reduction of the exhaust passage. This can increase vehicle emissions and deteriorate engine performance, driveability and fuel economy.

The catalyst monitor uses dual oxygen sensors (O2S's) to monitor the efficiency of the converter. The dual O2S strategy is based on the fact that as a catalyst deteriorates, its oxygen storage capacity and its efficiency are both reduced. By monitoring the oxygen storage capacity of a catalyst, its efficiency can be indirectly calculated. The upstream O2S is used to detect the amount of oxygen in the exhaust gas before the gas enters the catalytic converter. The PCM calculates the A/F mixture from the output of the O2S. A low voltage indicates high oxygen content (lean mixture). A high voltage indicates a low content of oxygen (rich mixture).

When the upstream O2S detects a high oxygen condition, there is an abundance of oxygen in the exhaust gas. A functioning converter would store this oxygen so it can use it for the oxidation of HC and CO. As the converter absorbs the oxygen, there will be a lack of oxygen downstream of the converter. The output of the downstream O2S will indicate limited activity in this condition.

As the converter loses the ability to store oxygen, the condition can be detected from the behavior of the downstream O2S. When the efficiency drops, no chemical reaction takes place. This means the concentration of oxygen will be the same downstream as upstream. The output voltage of the downstream O2S copies the voltage of the upstream sensor. The only difference is a time lag (seen by the PCM) between the switching of the O2S's.

To monitor the system, the number of lean-to-rich switches of upstream and downstream O2S's is counted. The ratio of downstream switches to upstream switches is used to determine whether the catalyst is operating properly. An effective catalyst will have fewer downstream switches than it has

EMISSIONS CONTROL (Continued)

upstream switches i.e., a ratio closer to zero. For a totally ineffective catalyst, this ratio will be one-to-one, indicating that no oxidation occurs in the device.

The system must be monitored so that when catalyst efficiency deteriorates and exhaust emissions increase to over the legal limit, the MIL (check engine lamp) will be illuminated.

Monitor Operation—To monitor catalyst efficiency, the PCM expands the rich and lean switch points of the heated oxygen sensor. With extended switch points, the air/fuel mixture runs richer and leaner to overburden the catalytic converter. Once the test is started, the air/fuel mixture runs rich and lean and the O2 switches are counted. A switch is counted when an oxygen sensor signal goes from below the lean threshold to above the rich threshold. The number of Rear O2 sensor switches is divided by the number of Front O2 sensor switches to determine the switching ratio.

The test runs for 20 seconds. As catalyst efficiency deteriorated over the life of the vehicle, the switch rate at the downstream sensor approaches that of the upstream sensor. If at any point during the test period the switch ratio reaches a predetermined value, a counter is incremented by one. The monitor is enabled to run another test during that trip. When the test fails three times, the counter increments to three, a malfunction is entered, and a Freeze Frame is stored. When the counter increments to three during the next trip, the code is matured and the MIL is illuminated. If the test passes the first, no further testing is conducted during that trip.

The MIL is extinguished after three consecutive good trips. The good trip criteria for the catalyst monitor is more stringent than the failure criteria. In order to pass the test and increment one good trip, the downstream sensor switch rate must be less than 80% of the upstream rate (60% for manual transmissions). The failure percentages are 90% and 70% respectively.

Enabling Conditions—The following conditions must typically be met before the PCM runs the catalyst monitor. Specific times for each parameter may be different from engine to engine.

- Accumulated drive time
- Enable time
- Ambient air temperature
- Barometric pressure
- Catalyst warm-up counter
- Engine coolant temperature
- Accumulated throttle position sensor
- Vehicle speed
- MAP
- RPM
- Engine in closed loop
- Fuel level

Pending Conditions—

- Misfire DTC
- Front Oxygen Sensor Response
- Front Oxygen Sensor Heater Monitor
- Front Oxygen Sensor Electrical
- Rear Oxygen Sensor Rationality (middle check)
- Rear Oxygen Sensor Heater Monitor
- Rear Oxygen Sensor Electrical
- Fuel System Monitor
- All TPS faults
- All MAP faults
- All ECT sensor faults
- Purge flow solenoid functionality
- Purge flow solenoid electrical
- All PCM self test faults
- All CMP and CKP sensor faults
- All injector and ignition electrical faults
- Idle Air Control (IAC) motor functionality
- Vehicle Speed Sensor
- Brake switch
- Intake air temperature

Conflict—The catalyst monitor does not run if any of the following are conditions are present:

- EGR Monitor in progress
- Fuel system rich intrusive test in progress
- EVAP Monitor in progress
- Time since start is less than 60 seconds
- Low fuel level
- Low ambient air temperature
- Ethanel content learn is taking place and the ethenal used once flag is set

Suspend—The Task Manager does not mature a catalyst fault if any of the following are present:

- Oxygen Sensor Monitor, Priority 1
- Upstream Oxygen Sensor Heater, Priority 1
- EGR Monitor, Priority 1
- EVAP Monitor, Priority 1
- Fuel System Monitor, Priority 2
- Misfire Monitor, Priority 2

OPERATION - NON-MONITORED CIRCUITS

The PCM does not monitor all circuits, systems and conditions that could have malfunctions causing driveability problems. However, problems with these systems may cause the PCM to store diagnostic trouble codes for other systems or components. For example, a fuel pressure problem will not register a fault directly, but could cause a rich/lean condition or misfire. This could cause the PCM to store an oxygen sensor or misfire diagnostic trouble code.

The major non-monitored circuits are listed below along with examples of failures modes that do not directly cause the PCM to set a DTC, but for a system that is monitored.

EMISSIONS CONTROL (Continued)

FUEL PRESSURE

The fuel pressure regulator controls fuel system pressure. The PCM cannot detect a clogged fuel pump inlet filter, clogged in-line fuel filter, or a pinched fuel supply or return line. However, these could result in a rich or lean condition causing the PCM to store an oxygen sensor, fuel system, or misfire diagnostic trouble code.

SECONDARY IGNITION CIRCUIT

The PCM cannot detect an inoperative ignition coil, fouled or worn spark plugs, ignition cross firing, or open spark plug cables. The misfire will however, increase the oxygen content in the exhaust, deceiving the PCM in to thinking the fuel system is too lean. Also see misfire detection.

CYLINDER COMPRESSION

The PCM cannot detect uneven, low, or high engine cylinder compression. Low compression lowers O2 content in the exhaust. Leading to fuel system, oxygen sensor, or misfire detection fault.

EXHAUST SYSTEM

The PCM cannot detect a plugged, restricted or leaking exhaust system. It may set a EGR (if equipped) or Fuel system or O2S fault.

FUEL INJECTOR MECHANICAL MALFUNCTIONS

The PCM cannot determine if a fuel injector is clogged, the needle is sticking or if the wrong injector is installed. However, these could result in a rich or lean condition causing the PCM to store a diagnostic trouble code for either misfire, an oxygen sensor, or the fuel system.

EXCESSIVE OIL CONSUMPTION

Although the PCM monitors engine exhaust oxygen content when the system is in closed loop, it cannot determine excessive oil consumption.

THROTTLE BODY AIR FLOW

The PCM cannot detect a clogged or restricted air cleaner inlet or filter element.

VACUUM ASSIST

The PCM cannot detect leaks or restrictions in the vacuum circuits of vacuum assisted engine control system devices. However, these could cause the PCM to store a MAP sensor diagnostic trouble code and cause a high idle condition.

PCM SYSTEM GROUND

The PCM cannot determine a poor system ground. However, one or more diagnostic trouble codes may be generated as a result of this condition. The module should be mounted to the body at all times, including when diagnostics are performed.

PCM CONNECTOR ENGAGEMENT

The PCM may not be able to determine spread or damaged connector pins. However, it might store diagnostic trouble codes as a result of spread connector pins.

DESCRIPTION - MONITORED SYSTEMS

There are new electronic circuit monitors that check fuel, emission, engine and ignition performance. These monitors use information from various sensor circuits to indicate the overall operation of the fuel, engine, ignition and emission systems and thus the emissions performance of the vehicle.

The fuel, engine, ignition and emission systems monitors do not indicate a specific component problem. They do indicate that there is an implied problem within one of the systems and that a specific problem must be diagnosed.

If any of these monitors detect a problem affecting vehicle emissions, the Malfunction Indicator (Check Engine) Lamp will be illuminated. These monitors generate Diagnostic Trouble Codes that can be displayed with the a DRBIII® scan tool.

The following is a list of the system monitors:

- EGR Monitor (if equipped)
- Misfire Monitor
- Fuel System Monitor
- Oxygen Sensor Monitor
- Oxygen Sensor Heater Monitor
- Catalyst Monitor
- Evaporative System Leak Detection Monitor (if equipped)

Following is a description of each system monitor, and its DTC.

Refer to the appropriate Powertrain Diagnostics Procedures manual for diagnostic procedures.

OXYGEN SENSOR (O2S) MONITOR

Effective control of exhaust emissions is achieved by an oxygen feedback system. The most important element of the feedback system is the O2S. The O2S is located in the exhaust path. Once it reaches operating temperatures of 300° to 350°C (572° to 662°F), the sensor generates a voltage that is inversely proportional to the amount of oxygen in the exhaust. The information obtained by the sensor is used to calculate the fuel injector pulse width. The PCM is programmed to maintain the optimum air/fuel ratio. At this mixture ratio, the catalyst works best to remove hydrocarbons (HC), carbon monoxide (CO) and nitrous oxide (NOx) from the exhaust.

EMISSIONS CONTROL (Continued)

The O2S is also the main sensing element for the EGR (if equipped), Catalyst and Fuel Monitors.

The O2S may fail in any or all of the following manners:

- Slow response rate
- Reduced output voltage
- Dynamic shift
- Shorted or open circuits

Response rate is the time required for the sensor to switch from lean to rich once it is exposed to a richer than optimum A/F mixture or vice versa. As the sensor starts malfunctioning, it could take longer to detect the changes in the oxygen content of the exhaust gas.

The output voltage of the O2S ranges from 0 to 1 volt (voltages are offset by 2.5 volts on NGC vehicles). A good sensor can easily generate any output voltage in this range as it is exposed to different concentrations of oxygen. To detect a shift in the A/F mixture (lean or rich), the output voltage has to change beyond a threshold value. A malfunctioning sensor could have difficulty changing beyond the threshold value.

OXYGEN SENSOR HEATER MONITOR

If there is an oxygen sensor (O2S) DTC as well as a O2S heater DTC, the O2S heater fault MUST be repaired first. After the O2S fault is repaired, verify that the heater circuit is operating correctly.

Effective control of exhaust emissions is achieved by an oxygen feedback system. The most important element of the feedback system is the O2S. The O2S is located in the exhaust path. Once it reaches operating temperatures of 300° to 350°C (572 ° to 662°F), the sensor generates a voltage that is inversely proportional to the amount of oxygen in the exhaust. The information obtained by the sensor is used to calculate the fuel injector pulse width. This maintains a 14.7 to 1 Air Fuel (A/F) ratio. At this mixture ratio, the catalyst works best to remove hydrocarbons (HC), carbon monoxide (CO) and nitrogen oxide (NOx) from the exhaust.

The voltage readings taken from the O2S are very temperature sensitive. The readings are not accurate below 300°C. Heating of the O2S is done to allow the engine controller to shift to closed loop control as soon as possible. The heating element used to heat the O2S must be tested to ensure that it is heating the sensor properly.

The O2S circuit is monitored for a drop in voltage. The sensor output is used to test the heater by isolating the effect of the heater element on the O2S output voltage from the other effects.

EGR MONITOR (if equipped)

The Powertrain Control Module (PCM) performs an on-board diagnostic check of the EGR system.

The EGR monitor is used to test whether the EGR system is operating within specifications. The diagnostic check activates only during selected engine/driving conditions. When the conditions are met, the EGR is turned off (solenoid energized) and the O2S compensation control is monitored. Turning off the EGR shifts the air fuel (A/F) ratio in the lean direction. The O2S data should indicate an increase in the O2 concentration in the combustion chamber when the exhaust gases are no longer recirculated. While this test does not directly measure the operation of the EGR system, it can be inferred from the shift in the O2S data whether the EGR system is operating correctly. Because the O2S is being used, the O2S test must pass its test before the EGR test. Also looks at EGR linear potentiometer for feedback.

MISFIRE MONITOR

Excessive engine misfire results in increased catalyst temperature and causes an increase in HC emissions. Severe misfires could cause catalyst damage. To prevent catalytic convertor damage, the PCM monitors engine misfire.

The Powertrain Control Module (PCM) monitors for misfire during most engine operating conditions (positive torque) by looking at changes in the crankshaft speed. If a misfire occurs the speed of the crankshaft will vary more than normal.

FUEL SYSTEM MONITOR

To comply with clean air regulations, vehicles are equipped with catalytic converters. These converters reduce the emission of hydrocarbons, oxides of nitrogen and carbon monoxide. The catalyst works best when the air fuel (A/F) ratio is at or near the optimum of 14.7 to 1.

The PCM is programmed to maintain the optimum air/fuel ratio. This is done by making short term corrections in the fuel injector pulse width based on the O2S output. The programmed memory acts as a self calibration tool that the engine controller uses to compensate for variations in engine specifications, sensor tolerances and engine fatigue over the life span of the engine. By monitoring the actual air-fuel ratio with the O2S (short term) and multiplying that with the program long-term (adaptive) memory and comparing that to the limit, it can be determined whether it will pass an emissions test. If a malfunction occurs such that the PCM cannot maintain the optimum A/F ratio, then the MIL will be illuminated.

EMISSIONS CONTROL (Continued)

CATALYST MONITOR

To comply with clean air regulations, vehicles are equipped with catalytic converters. These converters reduce the emission of hydrocarbons, oxides of nitrogen and carbon monoxide.

Normal vehicle miles or engine misfire can cause a catalyst to decay. A meltdown of the ceramic core can cause a reduction of the exhaust passage. This can increase vehicle emissions and deteriorate engine performance, driveability and fuel economy.

The catalyst monitor uses dual oxygen sensors (O2S's) to monitor the efficiency of the converter. The dual O2S's strategy is based on the fact that as a catalyst deteriorates, its oxygen storage capacity and its efficiency are both reduced. By monitoring the oxygen storage capacity of a catalyst, its efficiency can be indirectly calculated. The upstream O2S is used to detect the amount of oxygen in the exhaust gas before the gas enters the catalytic converter. The PCM calculates the A/F mixture from the output of the O2S. A low voltage indicates high oxygen content (lean mixture). A high voltage indicates a low content of oxygen (rich mixture).

When the upstream O2S detects a lean condition, there is an abundance of oxygen in the exhaust gas. A functioning converter would store this oxygen so it can use it for the oxidation of HC and CO. As the converter absorbs the oxygen, there will be a lack of oxygen downstream of the converter. The output of the downstream O2S will indicate limited activity in this condition.

As the converter loses the ability to store oxygen, the condition can be detected from the behavior of the downstream O2S. When the efficiency drops, no chemical reaction takes place. This means the concentration of oxygen will be the same downstream as upstream. The output voltage of the downstream O2S copies the voltage of the upstream sensor. The only difference is a time lag (seen by the PCM) between the switching of the O2S's.

To monitor the system, the number of lean-to-rich switches of upstream and downstream O2S's is counted. The ratio of downstream switches to upstream switches is used to determine whether the catalyst is operating properly. An effective catalyst will have fewer downstream switches than it has upstream switches i.e., a ratio closer to zero. For a totally ineffective catalyst, this ratio will be one-to-one, indicating that no oxidation occurs in the device.

The system must be monitored so that when catalyst efficiency deteriorates and exhaust emissions increase to over the legal limit, the MIL (Check Engine lamp) will be illuminated.

NATURAL VACUUM LEAK DETECTION (NVLD) (if equipped)

The Natural Vacuum Leak Detection (NVLD) system is the next generation evaporative leak detection system that will first be used on vehicles equipped with the Next Generation Controller (NGC). This new system replaces the leak detection pump as the method of evaporative system leak detection. This is to detect a leak equivalent to a 0.020″ (0.5 mm) hole. This system has the capability to detect holes of this size very dependably.

The basic leak detection theory employed with NVLD is the ″Gas Law″. This is to say that the pressure in a sealed vessel will change if the temperature of the gas in the vessel changes. The vessel will only see this effect if it is indeed sealed. Even small leaks will allow the pressure in the vessel to come to equilibrium with the ambient pressure. In addition to the detection of very small leaks, this system has the capability of detecting medium as well as large evaporative system leaks.

The NVLD seals the canister vent during engine off conditions. If the EVAP system has a leak of less than the failure threshold, the evaporative system will be pulled into a vacuum, either due to the cool down from operating temperature or diurnal ambient temperature cycling. The diurnal effect is considered one of the primary contributors to the leak determination by this diagnostic. When the vacuum in the system exceeds about 1″ H2O (0.25 KPA), a vacuum switch closes. The switch closure sends a signal to the NGC. The NGC, via appropriate logic strategies (described below), utilizes the switch signal, or lack thereof, to make a determination of whether a leak is present.

The NVLD device is designed with a normally open vacuum switch, a normally closed solenoid, and a seal, which is actuated by both the solenoid and a diaphragm. The NVLD is located on the atmospheric vent side of the canister. The NVLD assembly may be mounted on top of the canister outlet, or in-line between the canister and atmospheric vent filter. The normally open vacuum switch will close with about 1″ H2O (0.25 KPA) vacuum in the evaporative system. The diaphragm actuates the switch. This is above the opening point of the fuel inlet check valve in the fill tube so cap off leaks can be detected. Submerged fill systems must have recirculation lines that do not have the in-line normally closed check valve that protects the system from failed nozzle liquid ingestion, in order to detect cap off conditions.

The normally closed valve in the NVLD is intended to maintain the seal on the evaporative system during the engine off condition. If vacuum in the evaporative system exceeds 3″ to 6″ H2O (0.75 to 1.5 KPA), the valve will be pulled off the seat, opening the seal. This will protect the system from excessive vacuum

EMISSIONS CONTROL (Continued)

as well as allowing sufficient purge flow in the event that the solenoid was to become inoperative.

The solenoid actuates the valve to unseal the canister vent while the engine is running. It also will be used to close the vent during the medium and large leak tests and during the purge flow check. This solenoid requires initial 1.5 amps of current to pull the valve open but after 100 ms. will be duty cycled down to an average of about 150 mA for the remainder of the drive cycle.

Another feature in the device is a diaphragm that will open the seal in the NVLD with pressure in the evaporative system. The device will ″blow off″ at about 0.5″ H2O (0.12 KPA) pressure to permit the venting of vapors during refueling. An added benefit to this is that it will also allow the tank to ″breathe″ during increasing temperatures, thus limiting the pressure in the tank to this low level. This is beneficial because the induced vacuum during a subsequent declining temperature will achieve the switch closed (pass threshold) sooner than if the tank had to decay from a built up pressure.

The device itself has 3 wires: Switch sense, solenoid driver and ground. It also includes a resistor to protect the switch from a short to battery or a short to ground. The NGC utilizes a high-side driver to energize and duty-cycle the solenoid.

DESCRIPTION - HIGH AND LOW LIMITS

The PCM compares input signal voltages from each input device with established high and low limits for the device. If the input voltage is not within limits and other criteria are met, the PCM stores a diagnostic trouble code in memory. Other diagnostic trouble code criteria might include engine RPM limits or input voltages from other sensors or switches that must be present before verifying a diagnostic trouble code condition.

OPERATION

OPERATION - SYSTEM

The Powertrain Control Module (PCM) monitors many different circuits in the fuel injection, ignition, emission and engine systems. If the PCM senses a problem with a monitored circuit often enough to indicate an actual problem, it stores a Diagnostic Trouble Code (DTC) in the PCM's memory. If the code applies to a non-emissions related component or system, and the problem is repaired or ceases to exist, the PCM cancels the code after 40 warmup cycles. Diagnostic trouble codes that affect vehicle emissions illuminate the Malfunction Indicator Lamp (MIL). Refer to Malfunction Indicator Lamp in this section.

Certain criteria must be met before the PCM stores a DTC in memory. The criteria may be a specific range of engine RPM, engine temperature, and/or input voltage to the PCM.

The PCM might not store a DTC for a monitored circuit even though a malfunction has occurred. This may happen because one of the DTC criteria for the circuit has not been met. **For example**, assume the diagnostic trouble code criteria requires the PCM to monitor the circuit only when the engine operates between 750 and 2000 RPM. Suppose the sensor's output circuit shorts to ground when engine operates above 2400 RPM (resulting in 0 volt input to the PCM). Because the condition happens at an engine speed above the maximum threshold (2000 rpm), the PCM will not store a DTC.

There are several operating conditions for which the PCM monitors and sets DTC's. Refer to Monitored Systems, Components, and Non-Monitored Circuits in this section.

NOTE: Various diagnostic procedures may actually cause a diagnostic monitor to set a DTC. For instance, pulling a spark plug wire to perform a spark test may set the misfire code. When a repair is completed and verified, use the DRBIII® scan tool to erase all DTC's and extinguish the MIL.

Technicians can display stored DTC's. Refer to Diagnostic Trouble Codes (Refer to 8 - ELECTRICAL/ ELECTRONIC CONTROL MODULES/POWERTRAIN CONTROL MODULE - DESCRIPTION). For obtaining the DTC information, use the Data Link Connector with the DRBIII® scan tool (Fig. 1).

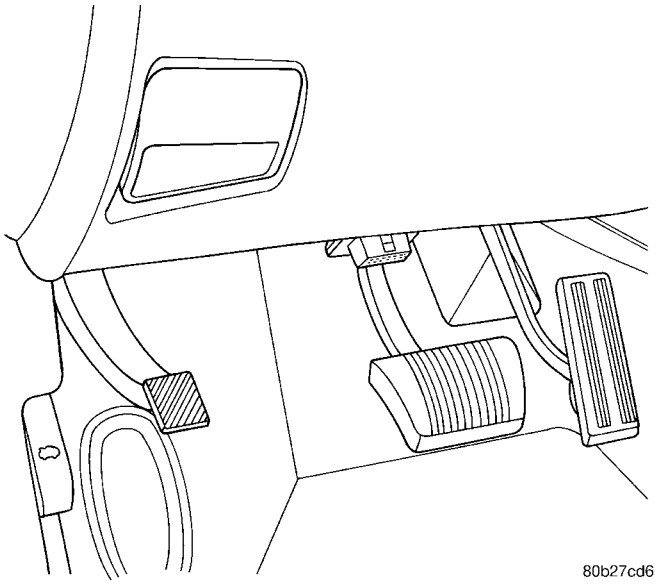

Fig. 1 Data Link Connector

EMISSIONS CONTROL (Continued)

DRB III® STATE DISPLAY TEST MODE

OPERATION

The switch inputs to the Powertrain Control Module (PCM) have two recognized states; HIGH and LOW. For this reason, the PCM cannot recognize the difference between a selected switch position versus an open circuit, a short circuit, or a defective switch. If the State Display screen shows the change from HIGH to LOW or LOW to HIGH, assume the entire switch circuit to the PCM functions properly. From the state display screen, access either State Display Inputs and Outputs or State Display Sensors.

EVAPORATIVE EMISSIONS

TABLE OF CONTENTS

page

EVAPORATIVE EMISSIONS
OPERATION - EVAPORATION CONTROL SYSTEM 11
EVAP/PURGE SOLENOID
OPERATION 15
REMOVAL 15
INSTALLATION 15
FUEL FILLER CAP
DESCRIPTION 15
OPERATION 15
NATURAL VAC LEAK DETECTION ASSY
DESCRIPTION 15
REMOVAL 15
INSTALLATION 16
LEAK DETECTION PUMP
REMOVAL 16
INSTALLATION 17
ORVR
OPERATION 17
DIAGNOSIS AND TESTING - VEHICLE DOES NOT FILL 19
PCV VALVE
DESCRIPTION 19
OPERATION 20
DIAGNOSIS AND TESTING - PCV SYSTEM . . . 20
VAPOR CANISTER
DESCRIPTION 20
OPERATION 20
REMOVAL 21
INSTALLATION 22

EVAPORATIVE EMISSIONS

OPERATION - EVAPORATION CONTROL SYSTEM

The evaporation control system prevents the emission of fuel tank vapors into the atmosphere. When fuel evaporates in the fuel tank, the vapors pass through vent hoses or tubes to an activated carbon filled evaporative canister. The canister temporarily holds the vapors. The Powertrain Control Module (PCM) allows intake manifold vacuum to draw vapors into the combustion chambers during certain operating conditions (Fig. 1), (Fig. 2), and (Fig. 3).

All engines use a proportional purge solenoid system. The PCM controls vapor flow by operating the purge solenoid. Refer to Proportional Purge Solenoid in this section.

NOTE: The evaporative system uses specially manufactured hoses. If they need replacement, only use fuel resistant hose. Also the hoses must be able to pass an Ozone compliance test.

NOTE: For more information on Onboard Refueling Vapor Recovery (ORVR), refer to the Fuel Delivery section.

EVAPORATIVE EMISSIONS (Continued)

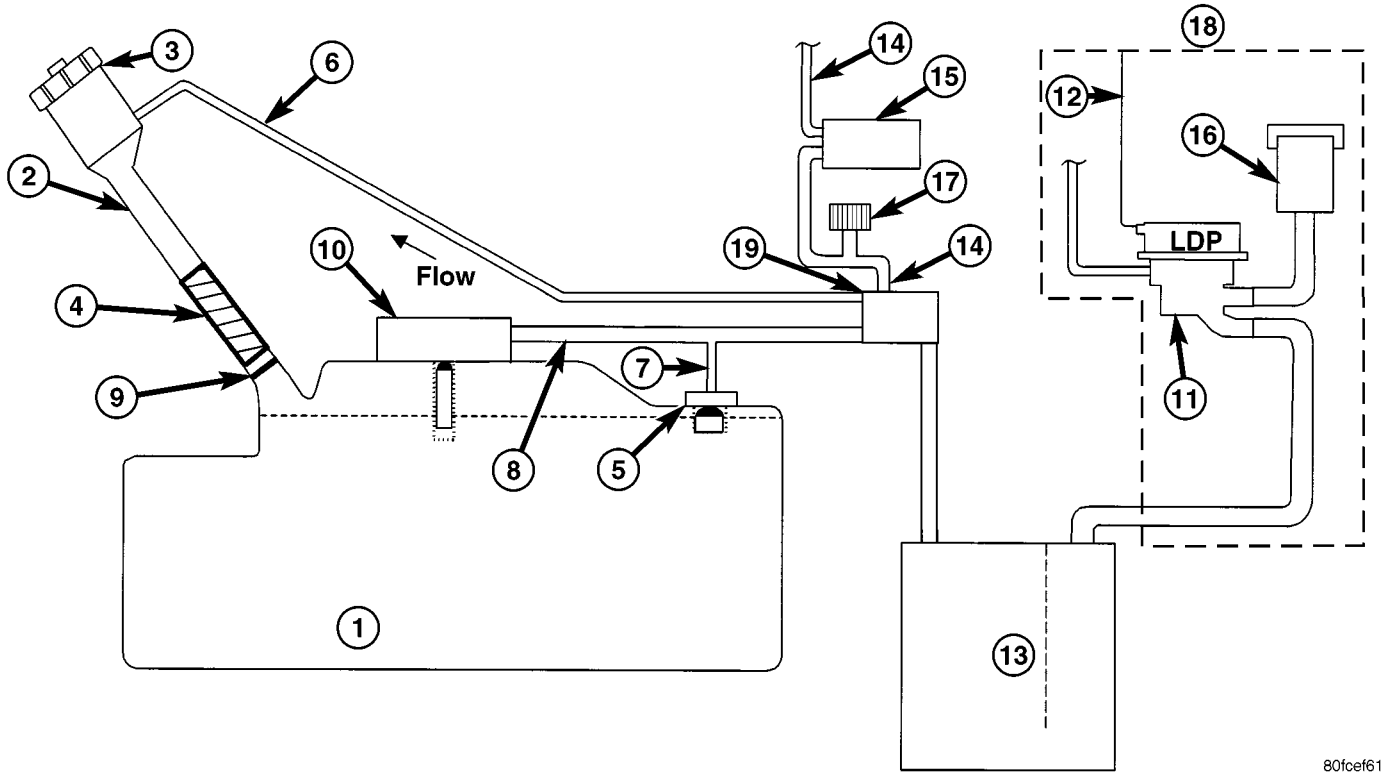

Fig. 1 ORVR SYSTEM SCHEMATIC 2.7 ATX

1 - FUEL TANK (PLASTIC)
2 - FUEL FILLER TUBE
3 - FUEL CAP (PRESSURE/RELIEF)
4 - FILL TUBE TO FUEL TANK CONNECTOR (ELASTOMERIC)
5 - TANK VENT/ROLLOVER VALVE(S)
6 - VAPOR RECIRCULATION LINE
7 - TANK VAPOR LINE
8 - VAPOR LINE TO CANISTER
9 - CHECK VALVE (N/C)
10 - CONTROL VALVE
11 - LEAK DETECTION PUMP (LDP)
12 - ENGINE WIRING HARNESS TO LDP
13 - VAPOR CANISTER
14 - PURGE LINE
15 - PURGE DEVICE
16 - BEATHER ELEMENT
17 - SERVICE PORT
18 - WITH LDP
19 - FLOW MANAGEMENT VALVE

EVAPORATIVE EMISSIONS (Continued)

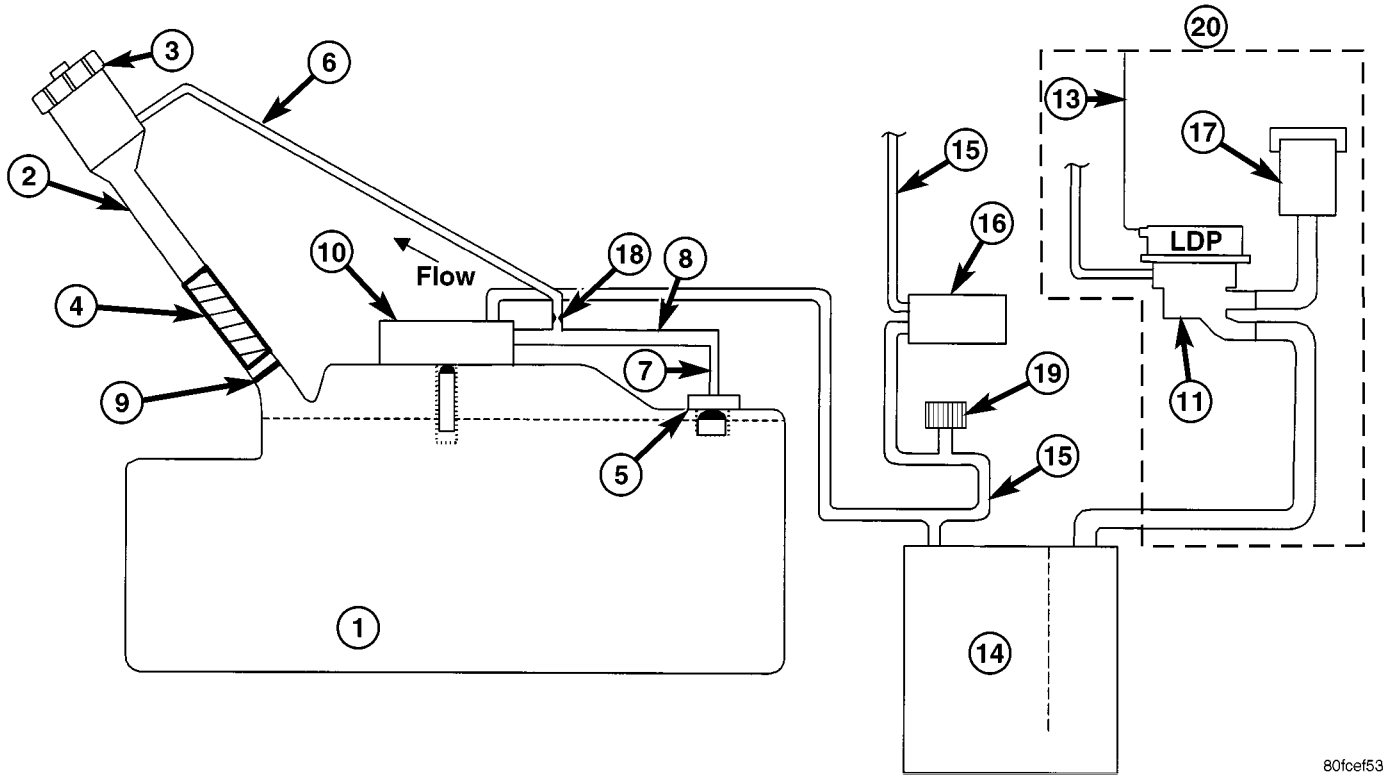

Fig. 2 ORVR SYSTEM SCHEMATIC 2.0, 2.4, 2.7L MTX & AUTOSTICK (GAS)

1 - FUEL TANK (PLASTIC)
2 - FUEL FILLER TUBE
3 - FUEL CAP (PRESSURE/RELIEF)
4 - FILL TUBE TO FUEL TANK CONNECTOR (ELASTOMERIC)
5 - TANK VENT/ROLLOVER VALVE(S)
6 - VAPOR RECIRCULATION LINE
7 - TANK VAPOR LINE
8 - VAPOR LINE TO CANISTER
9 - CHECK VALVE (N/C)
10 - CONTROL VALVE
11 - NATURAL VACUUM LEAD DETECTION (NVLD)
12 - LIQUID SEPARATOR (IF EQUIPPED)
13 - ENGINE WIRING HARNESS TO NVLD
14 - VAPOR CANISTER
15 - PURGE LINE
16 - PURGE DEVICE
17 - BREATHER ELEMENT
18 - FLOW CONTROL ORIFICE
19 - SERVICE PORT
20 - WITH LDP

EVAPORATIVE EMISSIONS (Continued)

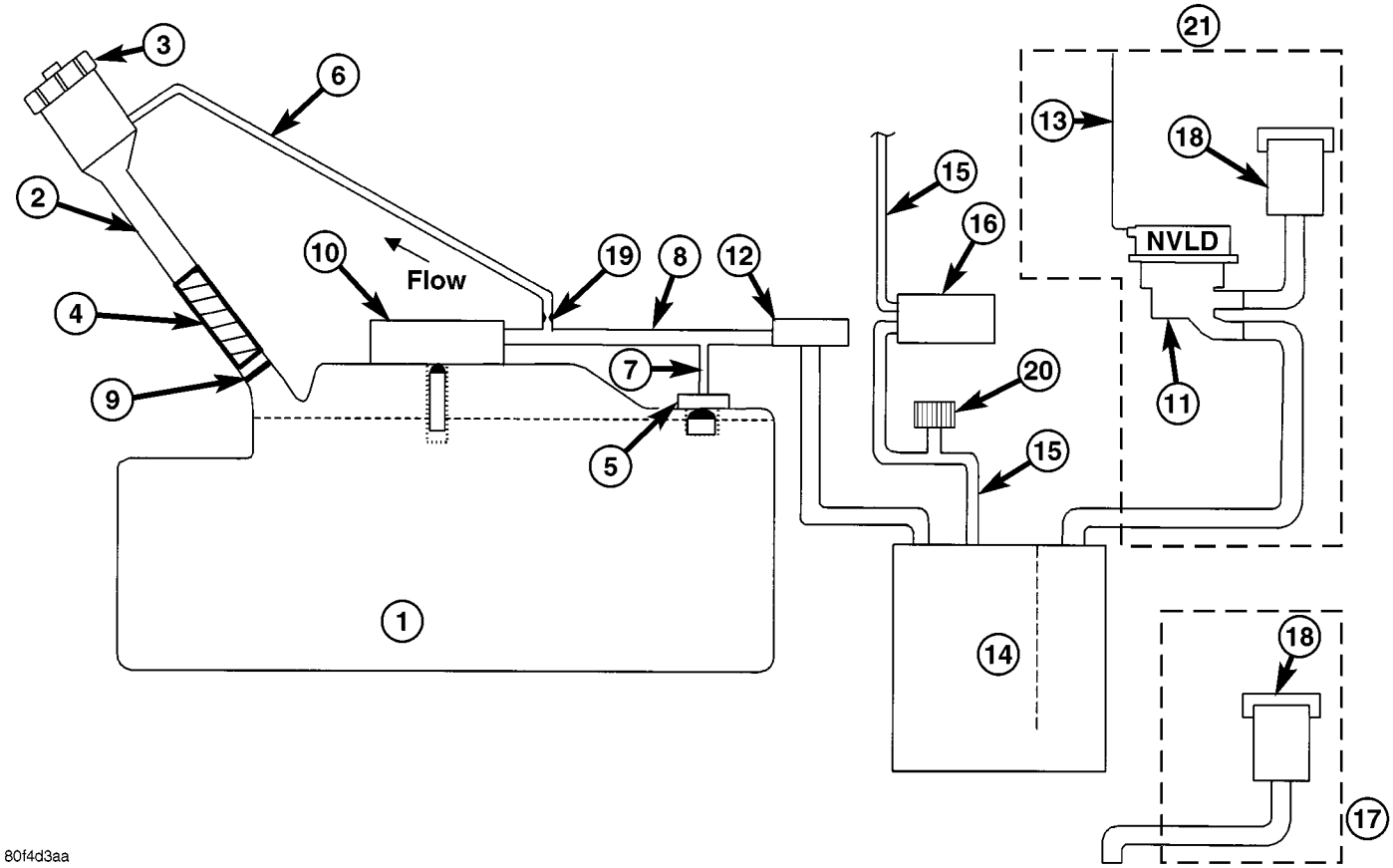

Fig. 3 ORVR System Schematic

1 - FUEL TANK (PLASTIC)
2 - FUEL FILLER TUBE
3 - FUEL CAP (PRESSURE/RELIEF)
4 - FILL TUBE TO FUEL TANK CONNECTOR (ELASTOMERIC)
5 - TANK VENT/ROLLOVER VALVE(S)
6 - VAPOR RECIRCULATION LINE
7 - TANK VAPOR LINE
8 - VAPOR LINE TO CANISTER
9 - CHECK VALVE (N/C)
10 - CONTROL VALVE
11 - NATURAL VACUUM LEAD DETECTION (NVLD)
12 - LIQUID SEPARATOR (IF EQUIPPED)
13 - ENGINE WIRING HARNESS TO NVLD
14 - VAPOR CANISTER
15 - PURGE LINE
16 - PURGE DEVICE
17 - WITHOUT NVLD
18 - BREATHER ELEMENT
19 - FLOW CONTROL ORIFICE
20 - SERVICE PORT
21 - WITH NVLD

EVAP/PURGE SOLENOID

OPERATION

During the cold start warm-up period and the hot start time delay, the PCM does not energize the solenoid. When de-energized, no vapors are purged.

The proportional purge solenoid operates at a frequency of 200 hz and is controlled by an engine controller circuit that senses the current being applied to the proportional purge solenoid and then adjusts that current to achieve the desired purge flow. The proportional purge solenoid controls the purge rate of fuel vapors from the vapor canister and fuel tank to the engine intake manifold.

REMOVAL

(1) Disconnect the negative battery cable.
(2) Remove the air cleaner box.
(3) Disconnect the electrical connector.
(4) Disconnect the vacuum hoses.
(5) Remove purge solenoid from the bracket (Fig. 4).

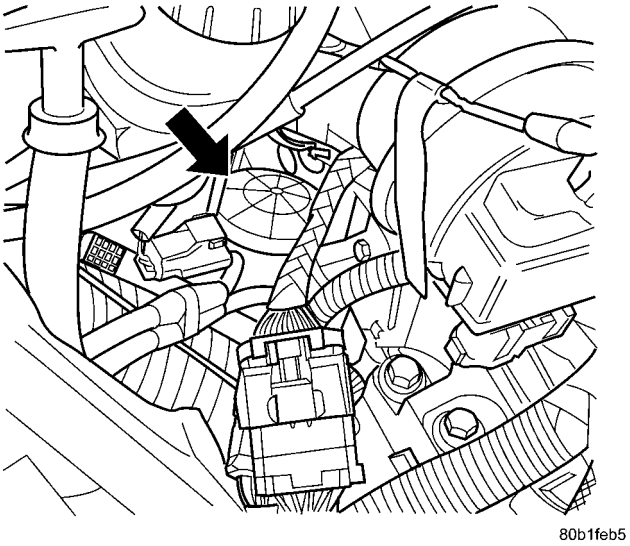

Fig. 4 PURGE SOLENOID

INSTALLATION

(1) Install purge solenoid onto bracket (Fig. 4).
(2) Connect the vacuum hoses.
(3) Connect the electrical connector.
(4) Install the air cleaner box.
(5) Connect the negative battery cable.

FUEL FILLER CAP

DESCRIPTION

The plastic fuel fill cap is threaded/quarter turn onto the end of the fuel filler tube. It's purpose is to retain vapors and fuel in the fuel tank.

OPERATION

The fuel filler cap incorporates a two-way relief valve that is closed to atmosphere during normal operating conditions. The relief valve is calibrated to open when a pressure of 17 kPa (2.5 psi) or vacuum of 2 kPa (0.6 in. Hg) occurs in the fuel tank. When the pressure or vacuum is relieved, the valve returns to the normally closed position.

CAUTION: Remove the fuel filler cap to release fuel tank pressure before disconnecting any fuel system component.

NATURAL VAC LEAK DETECTION ASSY

DESCRIPTION

The natural Vacuum Leak detection (NVLD) system is mounted on top of the EVAP canister (Fig. 5) that is mounted on the fuel tank.

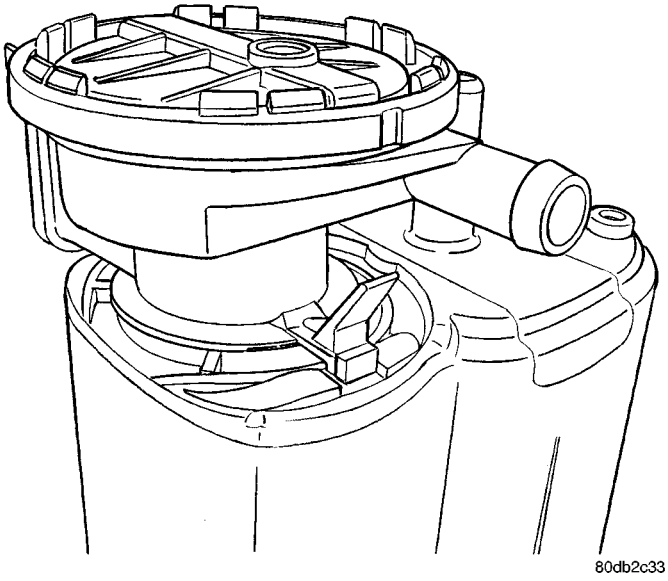

Fig. 5 NVLD ASSEMBLY

REMOVAL

(1) Disconnect the negative battery cable.
(2) Remove fuel tank, refer to the Fuel Delivery section for Fuel Tank Removal.
(3) Disconnect the electrical connector from the NVLD assembly.

NATURAL VAC LEAK DETECTION ASSY (Continued)

(4) Disconnect the hoses from the NVLD assembly (Fig. 5).

(5) Lift tab on NVLD assembly (Fig. 6) and twist the assembly counterclockwise and pull up to remove from EVAP canister (Fig. 7).

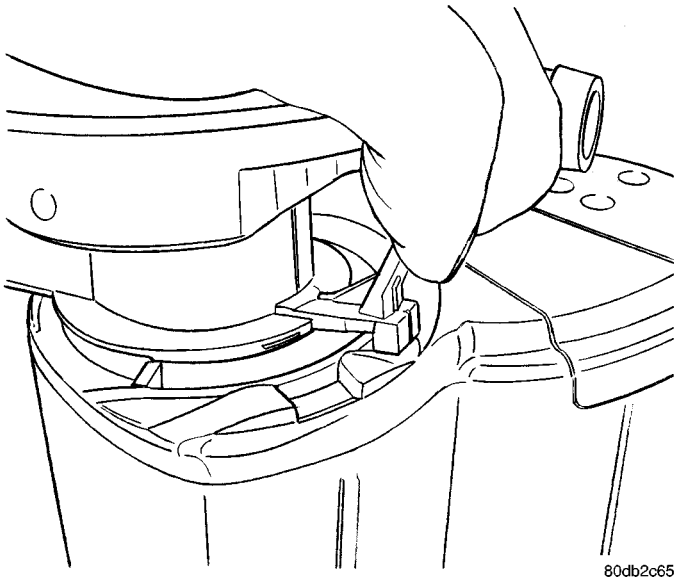

Fig. 6 LOCKING TAB

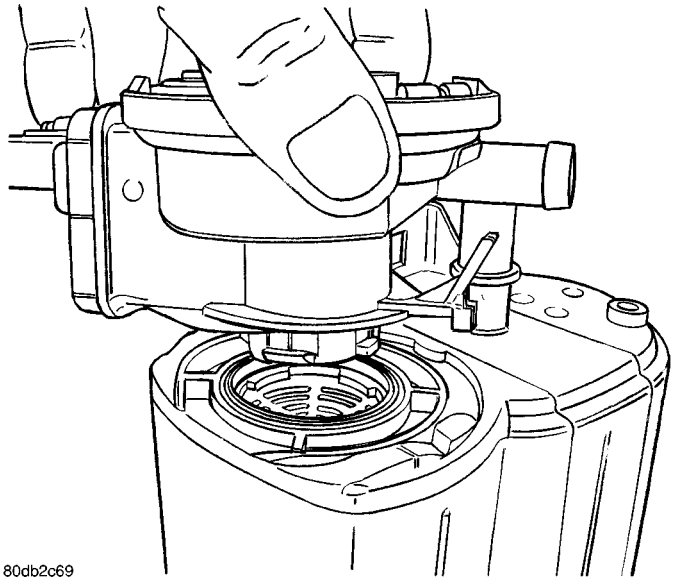

Fig. 7 ASSEMBLY REMOVED

(6) Remove O-ring from EVAP canister (Fig. 8).

INSTALLATION

(1) Install O-ring to EVAP canister (Fig. 8).

(2) Install NVLD assembly (Fig. 6) and twist the assembly clockwise to lock assembly in the EVAP canister (Fig. 7).

(3) Connect the hoses to the NVLD assembly.

(4) Connect the electrical connector to the NVLD assembly.

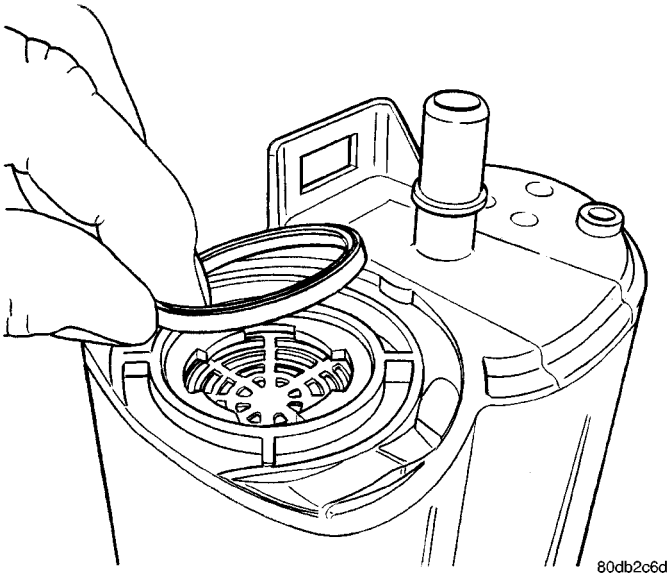

Fig. 8 O-RING

(5) Install fuel tank, refer to the Fuel Delivery section for Fuel Tank Installation.

(6) Connect the negative battery cable.

LEAK DETECTION PUMP

REMOVAL

(1) Disconnect the negative battery cable.

(2) Remove fuel tank, refer to the Fuel Delivery section (Fig. 9) and (Fig. 10).

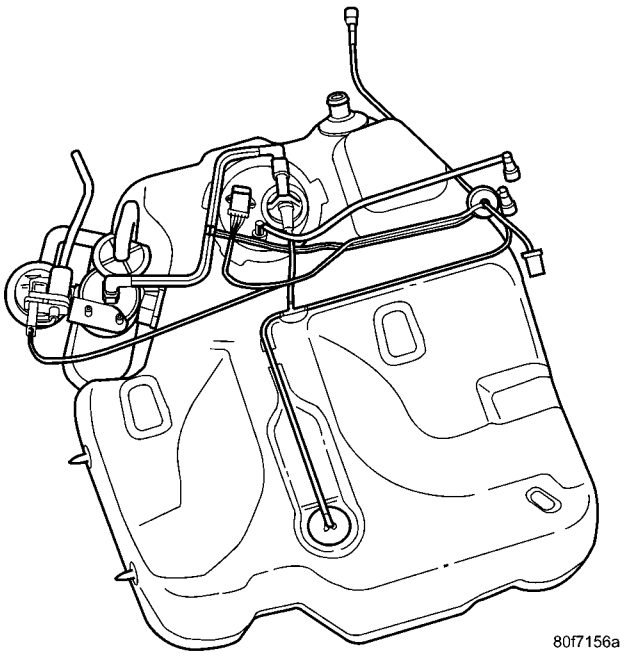

Fig. 9 FUEL TANK AND EVAP SYSTEM

(3) Disconnect the hoses from the EVAP canister.

LEAK DETECTION PUMP (Continued)

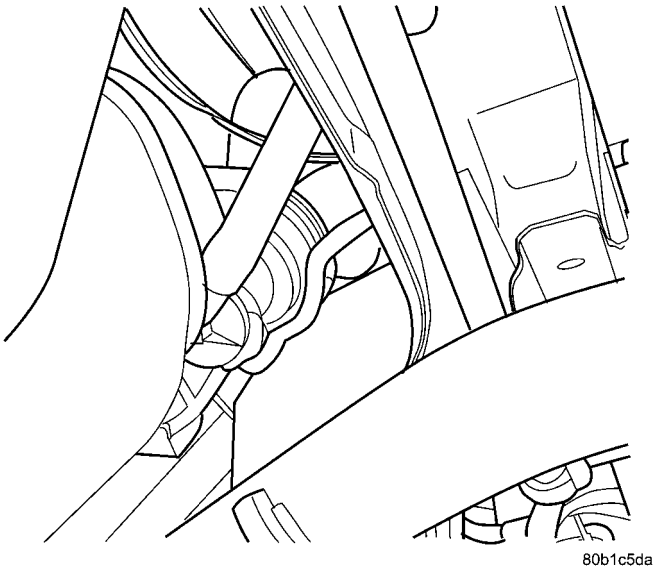

Fig. 10 LDP LOCATION

(4) Remove LDP from EVAP canister.

INSTALLATION

(1) Install LDP to EVAP Canister.
(2) Connect hoses.
(3) Install fuel tank refer to the Fuel Delivery section (Fig. 9).
(4) Connect negative battery cable.

ORVR

OPERATION

The emission control principle used in the ORVR system is that the fuel flowing into the filler tube (appx. 1” I.D.) creates an aspiration effect which draws air into the fill tube (Fig. 11). During refueling, the fuel tank is vented to the vapor canister to capture escaping vapors. With air flowing into the filler tube, there are no fuel vapors escaping to the atmosphere. Once the refueling vapors are captured by the canister, the vehicle’s computer controlled purge system draws vapor out of the canister for the engine to burn. The vapors flow is metered by the purge solenoid so that there is no or minimal impact on driveability or tailpipe emissions.

As fuel starts to flow through the fill tube, it opens the normally closed check valve and enters the fuel tank. Vapor or air is expelled from the tank through the control valve to the vapor canister. Vapor is absorbed in the canister until vapor flow in the lines stops, either following shut-off or by having the fuel level in the tank rise high enough to close the control valve. The control valve(Refer to 14 - FUEL SYSTEM/FUEL DELIVERY/FUEL TANK - OPERATION) contains a float that rises to seal the large diameter vent path to the canister. At this point in the fueling of the vehicle, the tank pressure increases, the check valve closes (preventing tank fuel from spitting back at the operator), and fuel then rises up the filler tube to shut-off the dispensing nozzle.

If the engine is shut-off while the On-Board diagnostics test is running, low level tank pressure can be trapped in the fuel tank and fuel can not be added to the tank until the pressure is relieved. This is due to the leak detection pump closing the vapor outlet from the top of the tank and the one-way check valve not allowing the tank to vent through the fill tube to atmosphere. Therefore, when fuel is added, it will back-up in the fill tube and shut off the dispensing nozzle. The pressure can be eliminated in two ways: 1. Vehicle purge must be activated and for a long enough period to eliminate the pressure. 2. Removing the fuel cap and allowing enough time for the system to vent thru the recirulation tube.

ORVR (Continued)

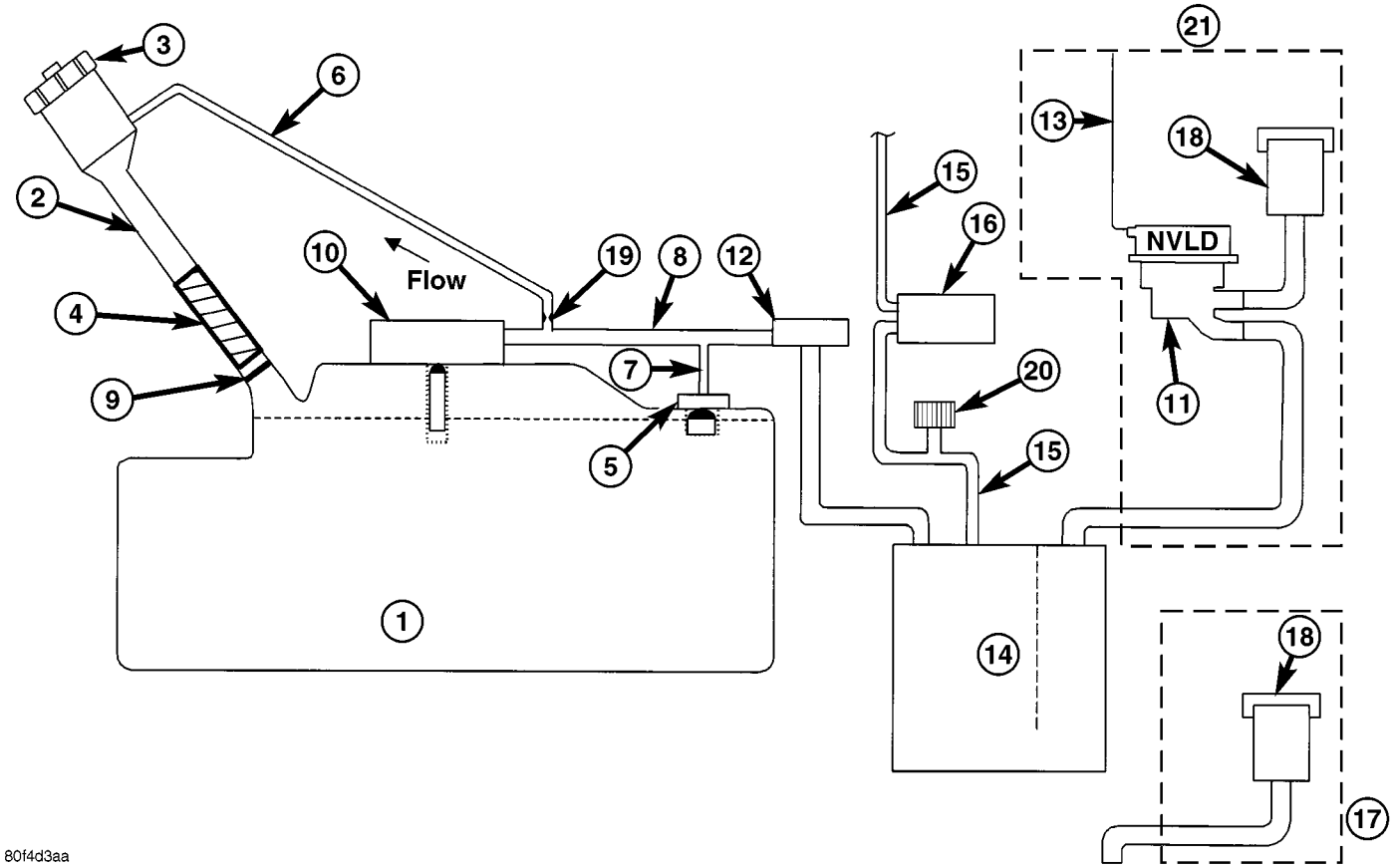

Fig. 11 ORVR System Schematic

1 - FUEL TANK (PLASTIC)
2 - FUEL FILLER TUBE
3 - FUEL CAP (PRESSURE/RELIEF)
4 - FILL TUBE TO FUEL TANK CONNECTOR (ELASTOMERIC)
5 - TANK VENT/ROLLOVER VALVE(S)
6 - VAPOR RECIRCULATION LINE
7 - TANK VAPOR LINE
8 - VAPOR LINE TO CANISTER
9 - CHECK VALVE (N/C)
10 - CONTROL VALVE
11 - NATURAL VACUUM LEAD DETECTION (NVLD)
12 - LIQUID SEPARATOR (IF EQUIPPED)
13 - ENGINE WIRING HARNESS TO NVLD
14 - VAPOR CANISTER
15 - PURGE LINE
16 - PURGE DEVICE
17 - WITHOUT NVLD
18 - BREATHER ELEMENT
19 - FLOW CONTROL ORIFICE
20 - SERVICE PORT
21 - WITH NVLD

ORVR (Continued)

DIAGNOSIS AND TESTING - VEHICLE DOES NOT FILL

CONDITION	POSSIBLE CAUSES	CORRECTION
Pre-Mature Nozzle Shut-Off	Defective fuel tank assembly components.	Fill tube improperly installed (sump) Fill tube hose pinched. Check valve stuck shut. Control valve stuck shut.
	Defective vapor/vent components.	Vent line from control valve to canister pinched. Vent line from canister to vent filter pinched. Canister vent valve failure (requires double failure, plugged to NVLD and atmosphere). Leak detection pump failed closed. Leak detection pump filter plugged.
	On-Board diagnostics evaporative system leak test just conducted.	Canister vent valve vent plugged to atmosphere. engine still running when attempting to fill (System designed not to fill).
	Defective fill nozzle.	Try another nozzle.
Fuel Spits Out Of Filler Tube.	During fill.	See Pre-Mature Shut-Off.
	At conclusion of fill.	Defective fuel handling component. (Check valve stuck open).
		Defective vapor/vent handling component.
		Defective fill nozzle.

PCV VALVE

DESCRIPTION

The PCV valve contains a spring loaded plunger. The plunger meters the amount of crankcase vapors routed into the combustion chamber based on intake manifold vacuum (Fig. 12).

PCV VALVE (Continued)

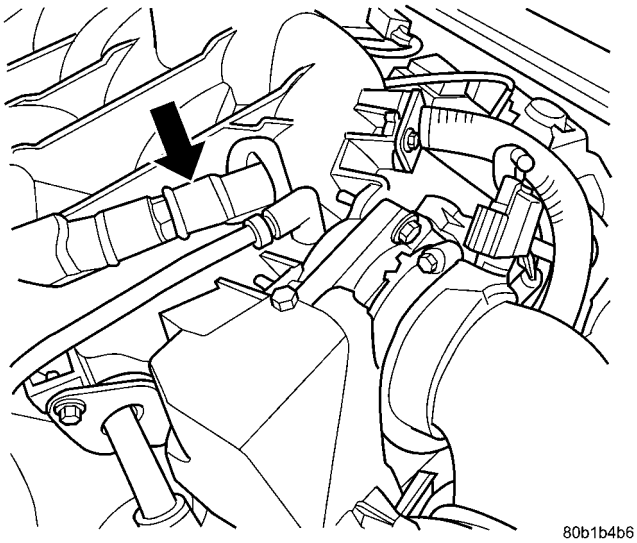

Fig. 12 POSITIVE CRANKCASE VALVE

OPERATION

When the engine is not operating or during an engine backfire, the spring forces the plunger back against the seat. This prevents vapors from flowing through the valve (Fig. 13).

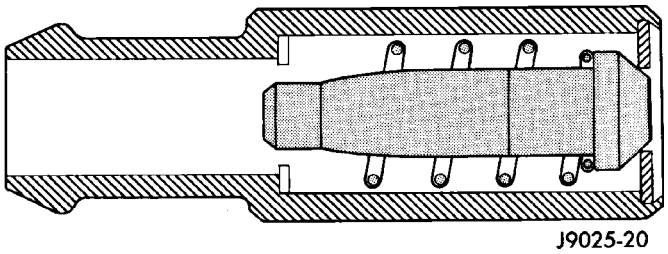

Fig. 13 Engine Off or Engine Backfire No Vapor Flow

When the engine is at idle or cruising, high manifold vacuum is present. At these times manifold vacuum is able to completely compress the spring and pull the plunger to the top of the valve (Fig. 14). In this position there is minimal vapor flow through the valve.

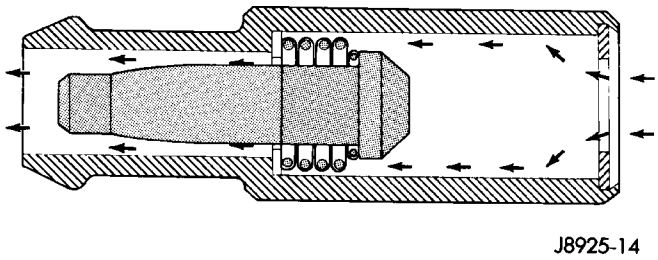

Fig. 14 High Intake Manifold Vacuum Minimal Vapor Flow

During periods of moderate intake manifold vacuum the plunger is only pulled part way back from the inlet. This results in maximum vapor flow through the valve (Fig. 15).

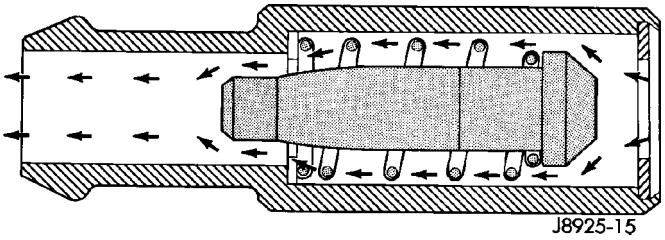

Fig. 15 Moderate Intake Manifold Vacuum Maximum Vapor Flow

DIAGNOSIS AND TESTING - PCV SYSTEM

WARNING: APPLY PARKING BRAKE AND/OR BLOCK WHEELS BEFORE PERFORMING ANY TEST OR ADJUSTMENT WITH THE ENGINE OPERATING.

(1) With engine idling, remove the hose from the PCV valve. If the valve is not plugged, a hissing noise will be heard as air passes through the valve. A strong vacuum should also be felt when a finger is placed over the valve inlet.

(2) Install hose on PCV valve. Remove the make-up air hose from the air plenum at the rear of the engine. Hold a piece of stiff paper (parts tag) loosely over the end of the make-up air hose.

(3) After allowing approximately one minute for crankcase pressure to reduce, the paper should draw up against the hose with noticeable force. If the engine does not draw the paper against the grommet after installing a new valve, replace the PCV valve hose.

(4) Turn the engine off. Remove the PCV valve from intake manifold. The valve should rattle when shaken.

(5) Replace the PCV valve and retest the system if it does not operate as described in the preceding tests. **Do not attempt to clean the old PCV valve.** If the valve rattles, apply a light coating of Loctite® Pipe Sealant With Teflon to the threads. Thread the PCV valve into the manifold plenum and tighten to 7 N·m (60 in. lbs.) torque.

VAPOR CANISTER

DESCRIPTION

The canister attaches to the bracket. The vacuum and vapor tubes connect to the top of the canister (Fig. 16). It is a charcoal canister.

OPERATION

All vehicles use a maintenance free, evaporative (EVAP) canister. Fuel tank vapors vent into the can-

VAPOR CANISTER (Continued)

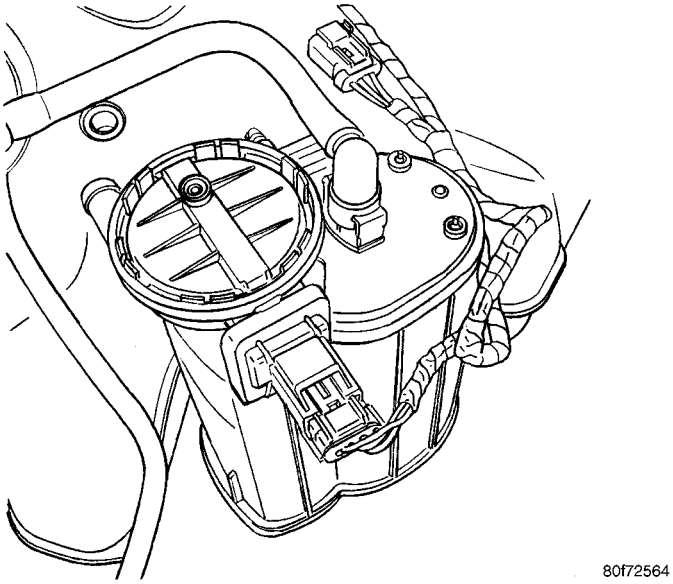

Fig. 16 EVAP Canister

ister. The canister temporarily holds the fuel vapors until intake manifold vacuum draws them into the combustion chamber. The Powertrain Control Module (PCM) purges the canister through the proportional purge solenoid. The PCM purges the canister at predetermined intervals and engine conditions.

Purge Free Cells

Purge-free memory cells are used to identify the fuel vapor content of the evaporative canister. Since the evaporative canister is not purged 100% of the time, the PCM stores information about the evaporative canister's vapor content in a memory cell.

The purge-free cells are constructed similar to certain purge-normal cells. The purge-free cells can be monitored by the DRB III® Scan Tool. The only difference between the purge-free cells and normal adaptive cells is that in purge-free, the purge is completely turned off. This gives the PCM the ability to compare purge and purge-free operation.

REMOVAL

(1) Disconnect the negative battery cable.

(2) Remove the fuel tank, refer to the fuel tank removal in this section

(3) Disconnect the EVAP hoses from the EVAP canister and the electrical connector (Fig. 17).

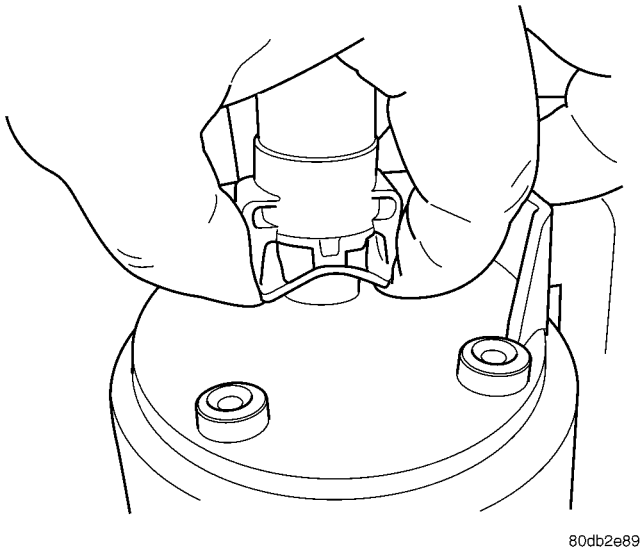

Fig. 17 EVAP CANISTER HOSES

(4) Squeeze the lower tabs on the EVAP canister to release it (Fig. 18).

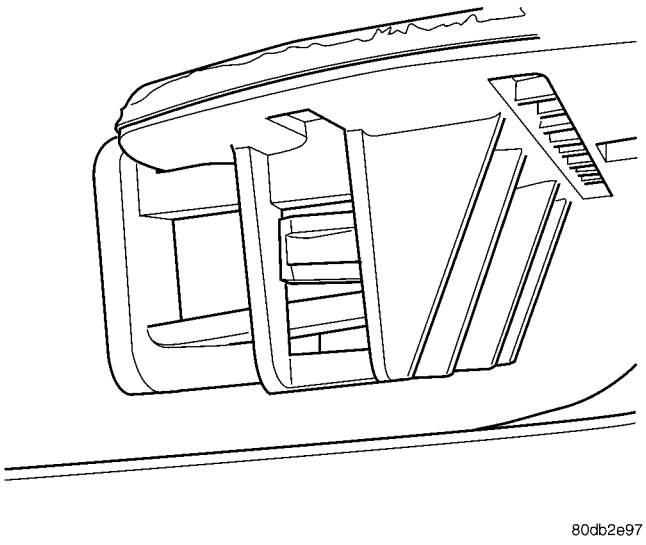

Fig. 18 EVAP CANISTER BOTTOM TABS

VAPOR CANISTER (Continued)

(5) Swing the EVAP canister away from the lower bracket.

(6) Lift the EVAP canister up and off the upper mounting tab (Fig. 19) and (Fig. 20).

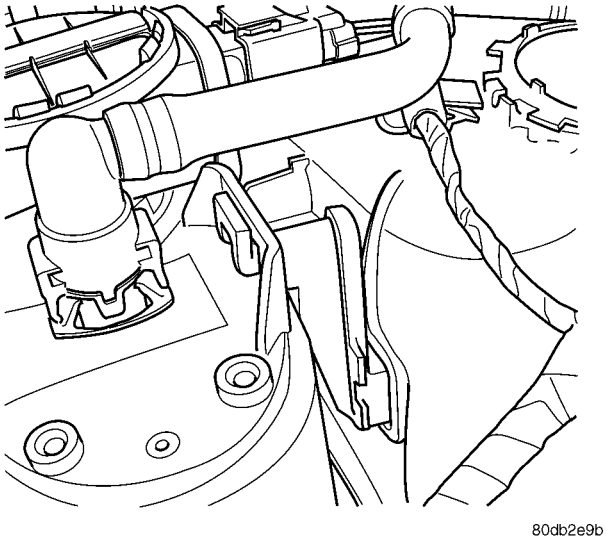

Fig. 19 EVAP CANISTER TOP TAB

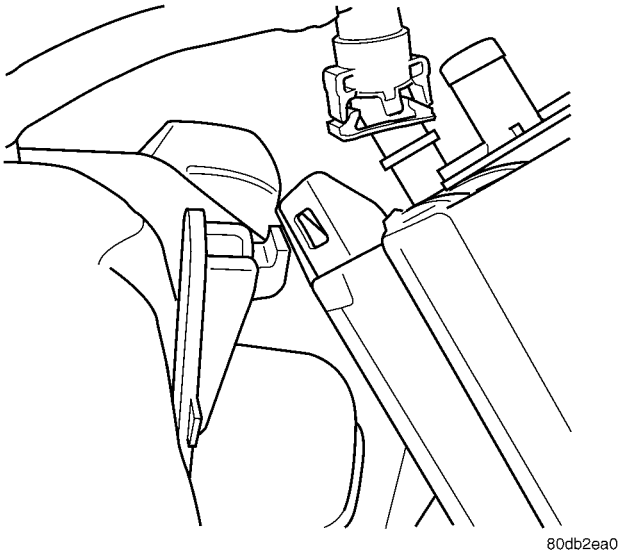

Fig. 20 EVAP CANISTER TOP MOUNTING

INSTALLATION

(1) Install the EVAP canister to the upper mounting bracket (Fig. 19) and (Fig. 20).

(2) Swing EVAP canister into the lower mounting and snap into place (Fig. 18).

(3) Install the hoses to the top of the EVAP canister (Fig. 17).

(4) Connect the electrical connector.

(5) Install the fuel tank, refer to the fuel tank installation section

(6) Connect the negative battery cable.

ON-BOARD DIAGNOSTICS

TABLE OF CONTENTS

page

TASK MANAGER
DESCRIPTION 23
OPERATION 23

TASK MANAGER

DESCRIPTION

The PCM is responsible for efficiently coordinating the operation of all the emissions-related components. The PCM is also responsible for determining if the diagnostic systems are operating properly. The software designed to carry out these responsibilities is call the “Task Manager”.

OPERATION

The Task Manager determines when tests happen and when functions occur. Many of the diagnostic steps required by OBD II must be performed under specific operating conditions. The Task Manager software organizes and prioritizes the diagnostic procedures. The job of the Task Manager is to determine if conditions are appropriate for tests to be run, monitor the parameters for a trip for each test, and record the results of the test. Following are the responsibilities of the Task Manager software:

- Test Sequence
- MIL Illumination
- Diagnostic Trouble Codes (DTCs)
- Trip Indicator
- Freeze Frame Data Storage
- Similar Conditions Window

Test Sequence

In many instances, emissions systems must fail diagnostic tests more than once before the PCM illuminates the MIL. These tests are known as ’two trip monitors.’ Other tests that turn the MIL lamp on after a single failure are known as ’one trip monitors.’ A trip is defined as ’start the vehicle and operate it to meet the criteria necessary to run the given monitor.’

Many of the diagnostic tests must be performed under certain operating conditions. However, there are times when tests cannot be run because another test is in progress (conflict), another test has failed (pending) or the Task Manager has set a fault that may cause a failure of the test (suspend).

- **Pending**

Under some situations the Task Manager will not run a monitor if the MIL is illuminated and a fault is stored from another monitor. In these situations, the Task Manager postpones monitors **pending** resolution of the original fault. The Task Manager does not run the test until the problem is remedied.

For example, when the MIL is illuminated for an Oxygen Sensor fault, the Task Manager does not run the Catalyst Monitor until the Oxygen Sensor fault is remedied. Since the Catalyst Monitor is based on signals from the Oxygen Sensor, running the test would produce inaccurate results.

- **Conflict**

There are situations when the Task Manager does not run a test if another monitor is in progress. In these situations, the effects of another monitor running could result in an erroneous failure. If this **conflict** is present, the monitor is not run until the conflicting condition passes. Most likely the monitor will run later after the conflicting monitor has passed.

For example, if the Fuel System Monitor is in progress, the Task Manager does not run the catalyst Monitor. Since both tests monitor changes in air/fuel ratio and adaptive fuel compensation, the monitors will conflict with each other.

- **Suspend**

Occasionally the Task Manager may not allow a two trip fault to mature. The Task Manager will **suspend** the maturing of a fault if a condition exists that may induce an erroneous failure. This prevents illuminating the MIL for the wrong fault and allows more precise diagnosis.

For example, if the PCM is storing a one trip fault for the Oxygen Sensor and the catalyst monitor, the Task Manager may still run the catalyst Monitor but will suspend the results until the Oxygen Sensor Monitor either passes or fails. At that point the Task Manager can determine if the catalyst system is actually failing or if an Oxygen Sensor is failing.

MIL Illumination

The PCM Task Manager carries out the illumination of the MIL. The Task Manager triggers MIL illumination upon test failure, depending on monitor failure criteria.

TASK MANAGER (Continued)

The Task Manager Screen shows both a Requested MIL state and an Actual MIL state. When the MIL is illuminated upon completion of a test for a good trip, the Requested MIL state changes to OFF. However, the MIL remains illuminated until the next key cycle. (On some vehicles, the MIL will actually turn OFF during the thirdgood trip) During the key cycle for the third good trip, the Requested MIL state is OFF, while the Actual MIL state is ON. After the next key cycle, the MIL is not illuminated and both MIL states read OFF.

Diagnostic Trouble Codes (DTCs)

With OBD II, different DTC faults have different priorities according to regulations. As a result, the priorities determine MIL illumination and DTC erasure. DTCs are entered according to individual priority. DTCs with a higher priority overwrite lower priority DTCs.

Priorities

- Priority 0 —Non-emissions related trouble codes.
- Priority 1 — One trip failure of a two trip fault for non-fuel system and non-misfire. (MIL Off)
- Priority 2 — One trip failure of a two trip fault for fuel system (rich/lean) or misfire. (MIL Off)
- Priority 3 — Two trip failure for a non-fuel system and non-misfire or matured one trip comprehensive component fault. (MIL On)
- Priority 4 — Two trip failure or matured fault for fuel system (rich/lean) and misfire or one trip catalyst damaging misfire. Catalyst damage misfire is a 2 trip MIL. The MIL flashes on the first trip when catalyst damage misfire levels are present. (MIL On)

Non-emissions related failures have no priority. One trip failures of two trip faults have low priority. Two trip failures or matured faults have higher priority. One and two trip failures of fuel system and misfire monitor take precedence over non-fuel system and non-misfire failures.

DTC Self Erasure

With one trip components or systems, the MIL is illuminated upon test failure and DTCs are stored.

Two trip monitors are components requiring failure in two consecutive trips for MIL illumination. Upon failure of the first test, the Task Manager enters a maturing code. If the component fails the test for a second time the code matures and a DTC is set.

After three good trips the MIL is extinguished and the Task Manager automatically switches the trip counter to a warm-up cycle counter. DTCs are automatically erased following 40 warm-up cycles if the component does not fail again.

For misfire and fuel system monitors, the component must pass the test under a Similar Conditions Window in order to record a good trip. A Similar Conditions Window is when engine RPM is within ±375 RPM and load is within ±20% of when the fault occurred.

NOTE: It is important to understand that a component does not have to fail under a similar window of operation to mature. It must pass the test under a Similar Conditions Window when it failed to record a Good Trip for DTC erasure for misfire and fuel system monitors.

DTCs can be erased anytime with a DRBIII®. Erasing the DTC with the DRBIII® erases all OBD II information. The DRBIII® automatically displays a warning that erasing the DTC will also erase all OBD II monitor data. This includes all counter information for warm-up cycles, trips and Freeze Frame.

Trip Indicator

The **Trip** is essential for running monitors and extinguishing the MIL. In OBD II terms, a trip is a set of vehicle operating conditions that must be met for a specific monitor to run. All trips begin with a key cycle.

Good Trip

The Good Trip counters are as follows:

- Global Good Trip
- Fuel System Good Trip
- Misfire Good Trip
- Alternate Good Trip (appears as a Global Good Trip on DRBIII®)
  - Comprehensive Components
  - Major Monitor
- Warm-Up Cycles

Global Good Trip

To increment a Global Good Trip, the Oxygen sensor and Catalyst efficiency monitors must have run and passed, and 2 minutes of engine run time.

Fuel System Good Trip

To count a good trip (three required) and turn off the MIL, the following conditions must occur:

- Engine in closed loop
- Operating in Similar Conditions Window
- Short Term multiplied by Long Term less than threshold
- Less than threshold for a predetermined time

If all of the previous criteria are met, the PCM will count a good trip (three required) and turn off the MIL.

Misfire Good Trip

If the following conditions are met the PCM will count one good trip (three required) in order to turn off the MIL:

- Operating in Similar Condition Window
- 1000 engine revolutions with no misfire

Alternate Good Trip

TASK MANAGER (Continued)

Alternate Good Trips are used in place of Global Good Trips for Comprehensive Components and Major Monitors. If the Task Manager cannot run a Global Good Trip because a component fault is stopping the monitor from running, it will attempt to count an Alternate Good Trip.

The Task Manager counts an Alternate Good Trip for Comprehensive components when the following conditions are met:

- Two minutes of engine run time, idle or driving
- No other faults occur

The Task Manager counts an Alternate Good Trip for a Major Monitor when the monitor runs and passes. Only the Major Monitor that failed needs to pass to count an Alternate Good Trip.

Warm-Up Cycles

Once the MIL has been extinguished by the Good Trip Counter, the PCM automatically switches to a Warm-Up Cycle Counter that can be viewed on the DRBIII®. Warm-Up Cycles are used to erase DTCs and Freeze Frames. Forty Warm-Up cycles must occur in order for the PCM to self-erase a DTC and Freeze Frame. A Warm-Up Cycle is defined as follows:

- Engine coolant temperature must start below and rise above 160° F
- Engine coolant temperature must rise by 40° F
- No further faults occur

Freeze Frame Data Storage

Once a failure occurs, the Task Manager records several engine operating conditions and stores it in a Freeze Frame. The Freeze Frame is considered one frame of information taken by an on-board data recorder. When a fault occurs, the PCM stores the input data from various sensors so that technicians can determine under what vehicle operating conditions the failure occurred.

The data stored in Freeze Frame is usually recorded when a system fails the first time for two trip faults. Freeze Frame data will only be overwritten by a different fault with a higher priority.

CAUTION: Erasing DTCs, either with the DRBIII®; or by disconnecting the battery, also clears all Freeze Frame data.

Similar Conditions Window

The Similar Conditions Window displays information about engine operation during a monitor. Absolute MAP (engine load) and Engine RPM are stored in this window when a failure occurs. There are two different Similar conditions Windows: Fuel System and Misfire.

FUEL SYSTEM

- **Fuel System Similar Conditions Window** — An indicator that 'Absolute MAP When Fuel Sys Fail' and 'RPM When Fuel Sys Failed' are all in the same range when the failure occurred. Indicated by switching from 'NO' to 'YES'.
- **Absolute MAP When Fuel Sys Fail** — The stored MAP reading at the time of failure. Informs the user at what engine load the failure occurred.
- **Absolute MAP** — A live reading of engine load to aid the user in accessing the Similar Conditions Window.
- **RPM When Fuel Sys Fail** — The stored RPM reading at the time of failure. Informs the user at what engine RPM the failure occurred.
- **Engine RPM** — A live reading of engine RPM to aid the user in accessing the Similar Conditions Window.
- **Adaptive Memory Factor** — The PCM utilizes both Short Term Compensation and Long Term Adaptive to calculate the Adaptive Memory Factor for total fuel correction.
- **Upstream O2S Volts** — A live reading of the Oxygen Sensor to indicate its performance. For example, stuck lean, stuck rich, etc.
- **SCW Time in Window (Similar Conditions Window Time in Window)** — A timer used by the PCM that indicates that, after all Similar Conditions have been met, if there has been enough good engine running time in the SCW without failure detected. This timer is used to increment a Good Trip.
- **Fuel System Good Trip Counter** — A Trip Counter used to turn OFF the MIL for Fuel System DTCs. To increment a Fuel System Good Trip, the engine must be in the Similar Conditions Window, Adaptive Memory Factor must be less than calibrated threshold and the Adaptive Memory Factor must stay below that threshold for a calibrated amount of time.
- **Test Done This Trip** — Indicates that the monitor has already been run and completed during the current trip.

MISFIRE

- **Same Misfire Warm-Up State** — Indicates if the misfire occurred when the engine was warmed up (above 160° F).
- **In Similar Misfire Window** — An indicator that 'Absolute MAP When Misfire Occurred' and 'RPM When Misfire Occurred' are all in the same range when the failure occurred. Indicated by switching from 'NO' to 'YES'.
- **Absolute MAP When Misfire Occurred** — The stored MAP reading at the time of failure. Informs the user at what engine load the failure occurred.

TASK MANAGER (Continued)

- **Absolute MAP** — A live reading of engine load to aid the user in accessing the Similar Conditions Window.
- **RPM When Misfire Occurred** — The stored RPM reading at the time of failure. Informs the user at what engine RPM the failure occurred.
- **Engine RPM** — A live reading of engine RPM to aid the user in accessing the Similar Conditions Window.
- **Adaptive Memory Factor** — The PCM utilizes both Short Term Compensation and Long Term Adaptive to calculate the Adaptive Memory Factor for total fuel correction.
- **200 Rev Counter** — Counts 0–100 720 degree cycles.
- **SCW Cat 200 Rev Counter** — Counts when in similar conditions.
- **SCW FTP 1000 Rev Counter** — Counts 0–4 when in similar conditions.
- **Misfire Good Trip Counter** — Counts up to three to turn OFF the MIL.

Description	Group-Page
ABS FASTENER TORQUE, SPECIFICATIONS	5-54
ABS PLUS - DESCRIPTION	5-49
ABS PLUS - OPERATION	5-51
A/C APPLICATION TABLE-ATC, SPECIFICATIONS	24-11
A/C COMPRESSOR - DESCRIPTION	24-41
A/C COMPRESSOR - DIAGNOSIS AND TESTING	24-41
A/C COMPRESSOR - INSTALLATION	24-42
A/C COMPRESSOR - OPERATION	24-41
A/C COMPRESSOR - REMOVAL	24-42
A/C COMPRESSOR CLUTCH - DESCRIPTION	24-13
A/C COMPRESSOR CLUTCH - INSTALLATION	24-15
A/C COMPRESSOR CLUTCH - OPERATION	24-13
A/C COMPRESSOR CLUTCH - REMOVAL	24-13
A/C COMPRESSOR CLUTCH COIL - DESCRIPTION	24-16
A/C COMPRESSOR CLUTCH COIL - OPERATION	24-16
A/C COMPRESSOR CLUTCH RELAY - DESCRIPTION	24-16
A/C COMPRESSOR CLUTCH RELAY - DIAGNOSIS AND TESTING	24-16
A/C COMPRESSOR CLUTCH RELAY - INSTALLATION	24-17
A/C COMPRESSOR CLUTCH RELAY - OPERATION	24-16
A/C COMPRESSOR CLUTCH RELAY - REMOVAL	24-17
A/C CONDENSER - DESCRIPTION	24-42
A/C CONDENSER - INSTALLATION	24-43
A/C CONDENSER - OPERATION	24-43
A/C CONDENSER - REMOVAL	24-43
A/C EVAPORATOR - DESCRIPTION	24-44
A/C EVAPORATOR - INSTALLATION	24-46
A/C EVAPORATOR - OPERATION	24-44
A/C EVAPORATOR - REMOVAL	24-45
A/C EXPANSION VALVE - DESCRIPTION	24-43
A/C EXPANSION VALVE - DIAGNOSIS AND TESTING	24-43
A/C EXPANSION VALVE - INSTALLATION	24-44
A/C EXPANSION VALVE - OPERATION	24-43
A/C EXPANSION VALVE - REMOVAL	24-44
A/C HEATER CONTROL - DIAGNOSIS AND TESTING	24-18
A/C HEATER CONTROL - INSTALLATION	24-18
A/C HEATER CONTROL - MTC - INSTALLATION	24-19
A/C HEATER CONTROL - MTC - REMOVAL	24-18
A/C HEATER CONTROL - REMOVAL	24-17
A/C OUTLETS - INSTALLATION, INSTRUMENT PANEL	24-40
A/C OUTLETS - REMOVAL, INSTRUMENT PANEL	24-40
A/C PRESSURE TRANSDUCER - DESCRIPTION	24-19
A/C PRESSURE TRANSDUCER - INSTALLATION	24-19
A/C PRESSURE TRANSDUCER - OPERATION	24-19
A/C PRESSURE TRANSDUCER - REMOVAL	24-19
A/C SYSTEM - STANDARD PROCEDURE, CHARGING	24-9
A/C SYSTEM - STANDARD PROCEDURE, EVACUATING	24-10
ACCELERATION SENSOR - DESCRIPTION, SATELLITE	8O-11
ACCELERATION SENSOR - INSTALLATION, SATELLITE	8O-12
ACCELERATION SENSOR - OPERATION, SATELLITE	8O-11
ACCELERATION SENSOR - REMOVAL, SATELLITE	8O-11
ACCELERATOR PEDAL - INSTALLATION	14-22
ACCELERATOR PEDAL - REMOVAL	14-21
ACCESSORY DRIVE BELT SPLASH SHIELD - INSTALLATION	23-52
ACCESSORY DRIVE BELT SPLASH SHIELD - REMOVAL	23-52
ACCESSORY DRIVE BELT TENSION - 2.7L - STANDARD PROCEDURE, CHECKING	7-5
ACCESSORY DRIVE BELT TENSION, SPECIFICATIONS	7-1
ACCESSORY DRIVE BELTS - ADJUSTMENT, 2.7L	7-8
ACCESSORY DRIVE BELTS - DIAGNOSIS AND TESTING	7-5
ACCUMULATOR - DESCRIPTION	21-179
ACCUMULATOR - OPERATION	21-179
ACTUATOR - DESCRIPTION, BLEND DOOR	24-24
ACTUATOR - DESCRIPTION, MODE DOOR	24-24
ACTUATOR - DESCRIPTION, RECIRCULATION DOOR	24-25
ACTUATOR - INSTALLATION, BLEND DOOR	24-24
ACTUATOR - INSTALLATION, MODE DOOR	24-25
ACTUATOR - INSTALLATION, RECIRCULATION DOOR	24-26
ACTUATOR - OPERATION, BLEND DOOR	24-24
ACTUATOR - OPERATION, MODE DOOR	24-24
ACTUATOR - OPERATION, RECIRCULATION DOOR	24-25
ACTUATOR - REMOVAL, BLEND DOOR	24-24
ACTUATOR - REMOVAL, MODE DOOR	24-25
ACTUATOR - REMOVAL, RECIRCULATION DOOR	24-26
ADAPTER - INSTALLATION, OIL FILTER	9-56
ADAPTER - REMOVAL, OIL FILTER	9-56
ADAPTIVE MEMORIES, OPERATION - FUEL CORRECTION OR	14-18
ADDING ADDITIONAL - COOLANT	7-27
ADDITIONAL - COOLANT, ADDING	7-27
ADHESIVE LOCATIONS - JR-27 - SPECIFICATIONS, STRUCTURAL	23-188
ADHESIVE LOCATIONS - JR-41 - SPECIFICATIONS, STRUCTURAL	23-199
ADHESIVES - INSTALLATION	23-61
ADHESIVES - REMOVAL	23-61
ADJUSTABLE QUARTER GLASS JR-27 - INSTALLATION	23-95
ADJUSTABLE QUARTER GLASS JR-27 - REMOVAL	23-95
ADJUSTER - INSTALLATION, MANUAL	23-116
ADJUSTER - INSTALLATION, SEAT BELT HEIGHT	8O-14
ADJUSTER - POWER - INSTALLATION, FRONT SEAT	23-115
ADJUSTER - POWER - REMOVAL, FRONT SEAT	23-115
ADJUSTER - REMOVAL, MANUAL	23-115
ADJUSTER - REMOVAL, SEAT BELT HEIGHT	8O-14
ADJUSTER BUMPER - INSTALLATION	23-62
ADJUSTER BUMPER - REMOVAL	23-62
ADJUSTER NOISE DIAGNOSIS - DIAGNOSIS AND TESTING, HYDRAULIC LASH	9-181
ADJUSTER NOISE DIAGNOSIS, DIAGNOSIS AND TESTING - HYDRAULIC LASH	9-32,9-99
ADJUSTERS - INSTALLATION, HYDRAULIC LASH	9-182
ADJUSTERS - REMOVAL, HYDRAULIC LASH	9-182
AERATION - DIAGNOSIS AND TESTING, COOLING SYSTEM	7-22
AFTER AN AIRBAG DEPLOYMENT - STANDARD PROCEDURE, SERVICE	8O-3
AIR CLEANER ELEMENT - INSTALLATION	9-165, 9-24,9-92
AIR CLEANER ELEMENT - REMOVAL	9-164,9-24, 9-92
AIR CLEANER HOUSING - INSTALLATION	9-165, 9-24,9-92
AIR CLEANER HOUSING - REMOVAL	9-165,9-24, 9-92
AIR CONDITIONING - WARNING, HEATING	24-1
AIR CONDITIONING, SPECIFICATIONS	24-11
AIR CONDITIONING SYSTEM - DIAGNOSIS AND TESTING	24-3
AIR CONTROL MOTOR - DESCRIPTION, IDLE	14-27
AIR CONTROL MOTOR - OPERATION, IDLE	14-27
AIR GAP, SPECIFICATIONS - WHEEL SPEED SENSOR	5-54
AIR PRESSURE TESTS - DIAGNOSIS AND TESTING, CLUTCH	21-116
AIR TEMPERATURE SENSOR - DESCRIPTION, INLET	14-28
AIR TEMPERATURE SENSOR - OPERATION, INLET	14-28
AIRBAG - DESCRIPTION, CURTAIN	8O-6
AIRBAG - DESCRIPTION, DRIVER	8O-7
AIRBAG - DESCRIPTION, PASSENGER	8O-10
AIRBAG - INSTALLATION, CURTAIN	8O-6
AIRBAG - INSTALLATION, DRIVER	8O-7
AIRBAG - INSTALLATION, PASSENGER	8O-10
AIRBAG - OPERATION, CURTAIN	8O-6
AIRBAG - OPERATION, DRIVER	8O-7
AIRBAG - OPERATION, PASSENGER	8O-10
AIRBAG - REMOVAL, CURTAIN	8O-6
AIRBAG - REMOVAL, DRIVER	8O-7
AIRBAG - REMOVAL, PASSENGER	8O-10
AIRBAG DEPLOYMENT - STANDARD PROCEDURE, SERVICE AFTER AN	8O-3
AIRBAG SYSTEM - DIAGNOSIS AND TESTING	8O-2
AIRBAG TRIM COVER - INSTALLATION, DRIVER	8O-8
AIRBAG TRIM COVER - REMOVAL, DRIVER	8O-7
AIRBAGS - STANDARD PROCEDURE, HANDLING	8O-3
ALIGNMENT - DESCRIPTION, WHEEL	2-52
ALIGNMENT - EXPORT - STANDARD PROCEDURE, FOG LAMP UNIT	8L-12
ALIGNMENT - EXPORT - STANDARD PROCEDURE, HEADLAMP UNIT	8L-18
ALIGNMENT - STANDARD PROCEDURE, FOG LAMP UNIT	8L-12
ALIGNMENT - STANDARD PROCEDURE, HEADLAMP UNIT	8L-17
ALIGNMENT - STANDARD PROCEDURE, WHEEL	2-58
ALIGNMENT INSPECTION - STANDARD PROCEDURE, PRE-WHEEL	2-57
ALIGNMENT, SPECIFICATIONS - WHEEL	2-61
ALUMINUM WHEEL CARE - CLEANING	22-12
AMBIENT TEMP SENSOR - DESCRIPTION	24-23
AMBIENT TEMP SENSOR - INSTALLATION	24-23
AMBIENT TEMP SENSOR - OPERATION	24-23
AMBIENT TEMP SENSOR - REMOVAL	24-23
AMPLIFIER - DESCRIPTION	8A-4
AMPLIFIER - INSTALLATION	8A-4
AMPLIFIER - OPERATION	8A-4
AMPLIFIER - REMOVAL	8A-4
AN AIRBAG DEPLOYMENT - STANDARD PROCEDURE, SERVICE AFTER	8O-3
ANCHOR - DESCRIPTION, CHILD RESTRAINT	8O-4
ANCHOR - INSTALLATION, CHILD RESTRAINT	8O-4
ANCHOR - OPERATION, CHILD RESTRAINT	8O-4
ANCHOR - REMOVAL, CHILD RESTRAINT	8O-4
ANTENNA - EXPORT - DIAGNOSIS AND TESTING, POWER	8A-7
ANTENNA - EXPORT - INSTALLATION, POWER	8A-7
ANTENNA - EXPORT - REMOVAL, POWER	8A-7
ANTENNA BODY & CABLE - INSTALLATION	8A-6
ANTENNA BODY & CABLE - REMOVAL	8A-6
ANTENNA BODY AND CABLE - DIAGNOSIS AND TESTING	8A-4
ANTILOCK BRAKE - DESCRIPTION, CONTROLLER	8E-4
ANTILOCK BRAKE - INSTALLATION, CONTROLLER	8E-5
ANTILOCK BRAKE - OPERATION, CONTROLLER	8E-4
ANTILOCK BRAKE - REMOVAL, CONTROLLER	8E-4
ANTILOCK BRAKE SYSTEM BLEEDING - STANDARD PROCEDURE	5-53
ANTILOCK BRAKES - DESCRIPTION	5-49
ANTILOCK BRAKES - OPERATION	5-50
A-PILLAR SEAL - INSTALLATION	23-134
A-PILLAR SEAL - REMOVAL	23-134

Description	Group-Page
A-PILLAR WEATHERSTRIP - INSTALLATION, HEADER	23-139
A-PILLAR WEATHERSTRIP - REMOVAL, HEADER	23-139
A-PILLAR WEATHERSTRIP RETAINER AND MOLDING - INSTALLATION	23-135
A-PILLAR WEATHERSTRIP RETAINER AND MOLDING - REMOVAL	23-135
APPLICATION TABLE-ATC, SPECIFICATIONS - A/C	24-11
APPLIQUE - INSTALLATION	23-42,23-45
APPLIQUE - REMOVAL	23-42,23-45
ARM - DESCRIPTION, LOWER CONTROL	2-14
ARM - DESCRIPTION, UPPER CONTROL	2-30,2-47
ARM - DIAGNOSIS AND TESTING, LOWER CONTROL	2-14
ARM - INSPECTION, UPPER CONTROL	2-31,2-50
ARM - INSTALLATION, UPPER CONTROL	2-31,2-51
ARM - OPERATION, LOWER CONTROL	2-14
ARM - OPERATION, UPPER CONTROL	2-30,2-47
ARM - REMOVAL, LOWER CONTROL	2-14
ARM - REMOVAL, UPPER CONTROL	2-31,2-47
ARMS - ADJUSTMENTS, WIPER	8R-4
ARMS - DESCRIPTION, ROCKER	9-182
ARMS - INSPECTION, ROCKER	9-101,9-183,9-34
ARMS - INSTALLATION, ROCKER	9-101,9-183,9-34
ARMS - INSTALLATION, WIPER	8R-4
ARMS - REMOVAL, ROCKER	9-100,9-183,9-33
ARMS - REMOVAL, WIPER	8R-4
ASPIRATOR MOTOR - DIAGNOSIS AND TESTING, IN-CAR SENSOR	24-21
ASPIRATOR VALVE - DESCRIPTION	5-5
ASPIRATOR VALVE - INSTALLATION	5-5
ASPIRATOR VALVE - OPERATION	5-5
ASPIRATOR VALVE - REMOVAL	5-5
AUDIO - DESCRIPTION	8A-1
AUDIO - DIAGNOSIS AND TESTING	8A-2
AUDIO - OPERATION	8A-1
AUTO SHUT DOWN RELAY - DESCRIPTION	8I-2
AUTO SHUT DOWN RELAY - OPERATION	8I-2
AUTOMATIC DAY / NIGHT MIRROR - DESCRIPTION	8N-8
AUTOMATIC DAY / NIGHT MIRROR - OPERATION	8N-8
AUTOMATIC DAY/NIGHT INSIDE MIRROR - DIAGNOSIS AND TESTING	8N-8
AUTOMATIC TRANSAXLE - DESCRIPTION, 41TE	21-110
AUTOMATIC TRANSAXLE - OPERATION, 41TE	21-112
AUTOMATIC/MANUAL TRANSAXLE FLUID - DESCRIPTION	0-4
AUTOSTICK SWITCH - DESCRIPTION	21-180
AUTOSTICK SWITCH - OPERATION	21-180
AXLE SEALS - INSTALLATION	21-72
AXLE SEALS - REMOVAL	21-72
BACK - INSTALLATION, FOLDING	23-114
BACK - REMOVAL, FOLDING	23-114
BACK LATCH STRIKER - INSTALLATION, SEAT	23-116
BACK LATCH STRIKER - REMOVAL, SEAT	23-116
BACKLITE - INSTALLATION	23-123
BACKLITE - REMOVAL	23-122
BACK-UP LAMP SWITCH - INSTALLATION	21-20,21-72
BACK-UP LAMP SWITCH - REMOVAL	21-20,21-72
BALANCE - STANDARD PROCEDURE, TIRE AND WHEEL	22-5
BALANCE LINK - ADJUSTMENT	23-16
BALANCE SHAFTS AND CARRIER ASSEMBLY - DESCRIPTION	9-138
BALANCE SHAFTS AND CARRIER ASSEMBLY - INSTALLATION	9-140
BALANCE SHAFTS AND CARRIER ASSEMBLY - OPERATION	9-138
BALANCE SHAFTS AND CARRIER ASSEMBLY - REMOVAL	9-139
BALL JOINT - ASSEMBLY, UPPER	2-50
BALL JOINT - DESCRIPTION, LOWER	2-11
BALL JOINT - DESCRIPTION, UPPER	2-30,2-47
BALL JOINT - DIAGNOSIS AND TESTING, LOWER	2-11
BALL JOINT - DIAGNOSIS AND TESTING, UPPER	2-30,2-47
BALL JOINT - DISASSEMBLY, UPPER	2-50
BALL JOINT SEAL BOOT - INSTALLATION, LOWER	2-12
BALL JOINT SEAL BOOT - REMOVAL, LOWER	2-11
BAR - DESCRIPTION, STABILIZER	2-28,2-43
BAR - DIAGNOSIS AND TESTING, STABILIZER	2-29,2-43
BAR - INSTALLATION, STABILIZER	2-30,2-44
BAR - OPERATION, STABILIZER	2-29,2-43
BAR - REMOVAL, STABILIZER	2-29,2-44
BAR BUSHING - INSTALLATION, STABILIZER	2-30
BAR BUSHING (FRONT) - REMOVAL, STABILIZER	2-29
BASE - CAUTION, BRAKES	5-2
BASE - WARNING, BRAKES	5-2
BASE BRAKE BLEEDING - STANDARD PROCEDURE	5-3
BASE BRAKE SYSTEM, SPECIAL TOOLS	5-4
BASECOAT/CLEARCOAT FINISH - DESCRIPTION	23-94
BATTERY - DESCRIPTION	8F-6
BATTERY - DIAGNOSIS AND TESTING	8F-7
BATTERY - OPERATION	8F-7
BATTERY CABLES - DESCRIPTION	8F-13
BATTERY CABLES - DIAGNOSIS AND TESTING	8F-14
BATTERY CABLES - INSTALLATION	8F-15
BATTERY CABLES - OPERATION	8F-13
BATTERY CABLES - REMOVAL	8F-15
BATTERY CHARGING - STANDARD PROCEDURE	8F-8
BATTERY HEATER BLANKET - DESCRIPTION	8F-16
BATTERY HEATER BLANKET - DIAGNOSIS AND TESTING	8F-17
BATTERY HEATER BLANKET - INSTALLATION	8F-17
BATTERY HEATER BLANKET - OPERATION	8F-17
BATTERY HEATER BLANKET - REMOVAL	8F-17
BATTERY HOLDDOWN - DESCRIPTION	8F-12
BATTERY HOLDDOWN - INSTALLATION	8F-13
BATTERY HOLDDOWN - OPERATION	8F-12
BATTERY HOLDDOWN - REMOVAL	8F-12
BATTERY SPECIFICATIONS, SPECIFICATIONS	8F-5
BATTERY SPLASH SHIELD - INSTALLATION	23-53
BATTERY SPLASH SHIELD - REMOVAL	23-53
BATTERY SYSTEM - CLEANING	8F-5
BATTERY SYSTEM - DESCRIPTION	8F-1
BATTERY SYSTEM - DIAGNOSIS AND TESTING	8F-2
BATTERY SYSTEM - INSPECTION	8F-5
BATTERY SYSTEM - OPERATION	8F-2
BATTERY SYSTEM SPECIAL TOOLS, SPECIAL TOOLS	8F-6
BATTERY TESTER - STANDARD PROCEDURE, USING MICRO 420	8F-7
BATTERY TRAY - DESCRIPTION	8F-15
BATTERY TRAY - INSTALLATION	8F-16
BATTERY TRAY - OPERATION	8F-15
BATTERY TRAY - REMOVAL	8F-16
BEARING - DESCRIPTION, HUB	2-34,2-6
BEARING - DIAGNOSIS AND TESTING, HUB	2-34,2-6
BEARING - INSTALLATION, HUB	2-34,2-7
BEARING - OPERATION, HUB	2-34,2-6
BEARING - REMOVAL, HUB	2-34,2-6
BEARING AND LEVER - DESCRIPTION, CLUTCH RELEASE	6-12
BEARING AND LEVER - OPERATION, CLUTCH RELEASE	6-12
BEARING AND RACE - INSTALLATION, OUTPUT	21-37
BEARING AND RACE - REMOVAL, OUTPUT	21-36
BEARING AND SLEEVE - INSTALLATION, INPUT	21-30
BEARING AND SLEEVE - REMOVAL, INPUT	21-30
BEARING CLEARANCE USING PLASTIGAGE - STANDARD PROCEDURE, MEASURING	9-12,9-81
BEARING CUPS - INSTALLATION, DIFFERENTIAL	21-27
BEARING CUPS - REMOVAL, DIFFERENTIAL	21-26
BEARING FITTING - STANDARD PROCEDURE, CONNECTING ROD	9-186
BEARING FITTING - STANDARD PROCEDURE, CRANKSHAFT MAIN	9-190
BEARING OIL FEED TROUGH - INSTALLATION, REAR	21-38
BEARING OIL FEED TROUGH - REMOVAL, REAR	21-38
BEARING PRELOAD ADJUSTMENT / SHIM SELECTION, ADJUSTMENTS - DIFFERENTIAL	21-25
BEARING PRELOAD MEASUREMENT AND ADJUSTMENT, ADJUSTMENTS - DIFFERENTIAL	21-186
BELL CRANK - INSTALLATION, LOCK BUTTON	23-37
BELL CRANK - REMOVAL, LOCK BUTTON	23-37
BELT - INSTALLATION, TIMING	9-134,9-68
BELT - REAR INBOARD - INSTALLATION, SEAT	8O-15
BELT - REAR INBOARD - REMOVAL, SEAT	8O-15
BELT - REAR OUTBOARD - INSTALLATION, SEAT	8O-15
BELT - REAR OUTBOARD - REMOVAL, SEAT	8O-15
BELT - REMOVAL, TIMING	9-132,9-66
BELT & RETRACTOR - FRONT OUTBOARD - INSTALLATION, SEAT	8O-16
BELT & RETRACTOR - FRONT OUTBOARD - REMOVAL, SEAT	8O-15
BELT & RETRACTOR - JR27 ONLY - INSTALLATION, FRONT SEAT	8O-9
BELT & RETRACTOR - JR27 ONLY - INSTALLATION, REAR SEAT	8O-11
BELT & RETRACTOR - JR27 ONLY - REMOVAL, FRONT SEAT	8O-8
BELT & RETRACTOR - JR27 ONLY - REMOVAL, REAR SEAT	8O-11
BELT & RETRACTOR - REAR CENTER - INSTALLATION, SEAT	8O-16
BELT & RETRACTOR - REAR CENTER - REMOVAL, SEAT	8O-16
BELT BUCKLE - JR27 ONLY - INSTALLATION, FRONT SEAT	8O-8
BELT BUCKLE - JR27 ONLY - INSTALLATION, REAR SEAT	8O-10
BELT BUCKLE - JR27 ONLY - REMOVAL, FRONT SEAT	8O-8
BELT BUCKLE - JR27 ONLY - REMOVAL, REAR SEAT	8O-10
BELT CONTROL TIMER MODULE - DIAGNOSIS AND TESTING, SEAT	8O-12
BELT CONTROL TIMER MODULE - JR27 - EXPORT - DESCRIPTION, SEAT	8O-12
BELT CONTROL TIMER MODULE - JR27 - EXPORT - INSTALLATION, SEAT	8O-14
BELT CONTROL TIMER MODULE - JR27 - EXPORT - OPERATION, SEAT	8O-12
BELT CONTROL TIMER MODULE - JR27 - EXPORT - REMOVAL, SEAT	8O-14
BELT COVER(S) - INSTALLATION, TIMING	9-132,9-65
BELT COVER(S) - REMOVAL, TIMING	9-130,9-64
BELT HEIGHT ADJUSTER - INSTALLATION, SEAT	8O-14
BELT HEIGHT ADJUSTER - REMOVAL, SEAT	8O-14
BELT MOLDING - INSTALLATION, FRONT DOOR OUTER	23-138
BELT MOLDING - INSTALLATION, REAR DOOR OUTER	23-142
BELT MOLDING - REMOVAL, FRONT DOOR OUTER	23-138
BELT MOLDING - REMOVAL, REAR DOOR OUTER	23-142
BELT SPLASH SHIELD - INSTALLATION, ACCESSORY DRIVE	23-52
BELT SPLASH SHIELD - REMOVAL, ACCESSORY DRIVE	23-52
BELT STABILIZER - INSTALLATION, DOOR GLASS INNER	23-34
BELT STABILIZER - REMOVAL, DOOR GLASS INNER	23-34

Description	Group-Page
BELT TENSION - 2.7L - STANDARD PROCEDURE, CHECKING ACCESSORY DRIVE	7-5
BELT TENSION, SPECIFICATIONS - ACCESSORY DRIVE	7-1
BELT TENSIONER - DESCRIPTION, SEAT	8O-16
BELT TENSIONER - OPERATION, SEAT	8O-17
BELT TENSIONER & PULLEY - INSTALLATION, TIMING	9-137,9-70
BELT TENSIONER & PULLEY - REMOVAL, TIMING	9-136,9-70
BELT WEATHERSTRIP - INSTALLATION, DOOR INNER	23-136
BELT WEATHERSTRIP - INSTALLATION, FRONT DOOR INNER	23-138
BELT WEATHERSTRIP - INSTALLATION, OUTER DOOR	23-140
BELT WEATHERSTRIP - INSTALLATION, REAR DOOR INNER	23-142
BELT WEATHERSTRIP - REMOVAL, DOOR INNER	23-136
BELT WEATHERSTRIP - REMOVAL, FRONT DOOR INNER	23-138
BELT WEATHERSTRIP - REMOVAL, OUTER DOOR	23-140
BELT WEATHERSTRIP - REMOVAL, REAR DOOR INNER	23-142
BELT WEATHERSTRIP/MOLDING - INSTALLATION, QUARTER PANEL OUTER	23-141
BELT WEATHERSTRIP/MOLDING - REMOVAL, QUARTER PANEL OUTER	23-141
BELTS - ADJUSTMENT, 2.7L ACCESSORY DRIVE	7-8
BELTS - DESCRIPTION, DRIVE	7-4
BELTS - DIAGNOSIS AND TESTING, ACCESSORY DRIVE	7-5
BELTS - DIAGNOSIS AND TESTING, FASTEN SEAT	8B-3
BEZEL - INSTALLATION, CD CHANGER TRIM	23-66
BEZEL - INSTALLATION, INSTRUMENT PANEL CENTER	23-70
BEZEL - INSTALLATION, INSTRUMENT PANEL CLUSTER	23-70
BEZEL - INSTALLATION, INSTRUMENT PANEL INBOARD	23-72
BEZEL - INSTALLATION, INSTRUMENT PANEL OUTBOARD	23-72
BEZEL - INSTALLATION, RIGHT INSTRUMENT PANEL TRIM	23-75
BEZEL - REMOVAL, CD CHANGER TRIM	23-66
BEZEL - REMOVAL, INSTRUMENT PANEL CENTER	23-70
BEZEL - REMOVAL, INSTRUMENT PANEL CLUSTER	23-70
BEZEL - REMOVAL, INSTRUMENT PANEL INBOARD	23-72
BEZEL - REMOVAL, INSTRUMENT PANEL OUTBOARD	23-72
BEZEL - REMOVAL, RIGHT INSTRUMENT PANEL TRIM	23-75
BLADES - CLEANING, WIPER	8R-5
BLADES - INSTALLATION, WIPER	8R-5
BLADES - REMOVAL, WIPER	8R-5
BLANKET - DESCRIPTION, BATTERY HEATER	8F-16
BLANKET - DIAGNOSIS AND TESTING, BATTERY HEATER	8F-17
BLANKET - INSTALLATION, BATTERY HEATER	8F-17
BLANKET - OPERATION, BATTERY HEATER	8F-17
BLANKET - REMOVAL, BATTERY HEATER	8F-17
BLEEDING - STANDARD PROCEDURE, ANTILOCK BRAKE SYSTEM	5-53
BLEEDING - STANDARD PROCEDURE, BASE BRAKE	5-3
BLEEDING - STANDARD PROCEDURE, MASTER CYLINDER	5-27
BLEEDING CLUTCH HYDRAULIC CIRCUIT - STANDARD PROCEDURE	6-6
BLEEDING PROCEDURES - ADJUSTMENT, HYDRAULIC MOTOR/ PUMP	23-14
BLEND DOOR ACTUATOR - DESCRIPTION	24-24
BLEND DOOR ACTUATOR - INSTALLATION	24-24
BLEND DOOR ACTUATOR - OPERATION	24-24
BLEND DOOR ACTUATOR - REMOVAL	24-24
BLOCK - CLEANING, ENGINE	9-104,9-185,9-37
BLOCK - DESCRIPTION, ENGINE	9-103,9-184, 9-36
BLOCK - DESCRIPTION, JUNCTION	8W-97-3
BLOCK - DESCRIPTION, JUNCTION	5-26
BLOCK - INSPECTION, ENGINE	9-104,9-185,9-37
BLOCK - INSTALLATION, JUNCTION	8W-97-4
BLOCK - INSTALLATION, JUNCTION	5-26
BLOCK - OPERATION, JUNCTION	8W-97-3
BLOCK - OPERATION, JUNCTION	5-26
BLOCK - REMOVAL, JUNCTION	8W-97-3
BLOCK - REMOVAL, JUNCTION	5-26
BLOCK HEATER TESTING - DIAGNOSIS AND TESTING, ENGINE	7-30
BLOWER MOTOR - INSTALLATION	24-29
BLOWER MOTOR - REMOVAL	24-29
BLOWER MOTOR RESISTOR - DESCRIPTION	24-26
BLOWER MOTOR RESISTOR - DIAGNOSIS AND TESTING-BLOWER MOTOR RESISTOR	24-26
BLOWER MOTOR RESISTOR - INSTALLATION	24-27
BLOWER MOTOR RESISTOR - OPERATION	24-26
BLOWER MOTOR RESISTOR - REMOVAL	24-27
BODY - ASSEMBLY, VALVE	21-246
BODY & CABLE - INSTALLATION, ANTENNA	8A-6
BODY & CABLE - REMOVAL, ANTENNA	8A-6
BODY - DESCRIPTION, THROTTLE	14-34
BODY - DESCRIPTION, VALVE	21-239
BODY - DISASSEMBLY, VALVE	21-242
BODY - INSTALLATION, VALVE	21-251
BODY - OPERATION, THROTTLE	14-34
BODY - OPERATION, VALVE	21-239
BODY - REMOVAL, VALVE	21-240
BODY AND CABLE - DIAGNOSIS AND TESTING, ANTENNA	8A-4
BODY CODE PLATE - DESCRIPTION	Intro.-1
BODY CONTROL MODULE - DESCRIPTION	8E-2
BODY CONTROL MODULE - INSTALLATION	8E-3
BODY CONTROL MODULE - OPERATION	8E-3
BODY CONTROL MODULE - REMOVAL	8E-3
BODY GAP AND FLUSH MEASUREMENTS - JR-27 - SPECIFICATIONS	23-145
BODY LUBRICATION, SPECIFICATIONS	23-10
BODY OPENING DIMENSION - JR-27 - SPECIFICATIONS	23-148
BODY OPENING DIMENSIONS - JR-41 - SPECIFICATIONS	23-150
BODY PANEL REPAIR - STANDARD PROCEDURE, PLASTIC	23-3
BODY SIDE MOLDINGS - INSTALLATION	23-53
BODY SIDE MOLDINGS - REMOVAL	23-53
BODY, SPECIAL TOOLS	23-12
BOOSTER - DIAGNOSIS AND TESTING, POWER BRAKE	5-28
BOOSTER - INSTALLATION, POWER BRAKE	5-30
BOOSTER - REMOVAL, POWER BRAKE	5-28
BOOT - INNER - INSTALLATION, CV	3-10
BOOT - INNER - REMOVAL, CV	3-9
BOOT - INSTALLATION, LOWER BALL JOINT SEAL	2-12
BOOT - INSTALLATION, SHIFT	23-90
BOOT - OUTER - INSTALLATION, CV	3-15
BOOT - OUTER - REMOVAL, CV	3-14
BOOT - REMOVAL, LOWER BALL JOINT SEAL	2-11
BOOT - REMOVAL, SHIFT	23-90
BORE FITTING - STANDARD PROCEDURE, PISTON TO CYLINDER	9-111,9-44
BORE HONING - STANDARD PROCEDURE, CYLINDER	9-103,9-184,9-36
BOX - INSTALLATION, GLOVE	23-67
BOX - REMOVAL, GLOVE	23-66
BOX LATCH - INSTALLATION, GLOVE	23-67
BOX LATCH - REMOVAL, GLOVE	23-67
B-PILLAR DOOR SEAL - INSTALLATION, REAR DOOR	23-141
B-PILLAR DOOR SEAL - REMOVAL, REAR DOOR	23-141
B-PILLAR LOWER TRIM - INSTALLATION	23-80
B-PILLAR LOWER TRIM - REMOVAL	23-80
B-PILLAR TRIM - INSTALLATION, UPPER	23-91
B-PILLAR TRIM - REMOVAL, UPPER	23-91
BRAKE - ADJUSTMENT, PARKING	5-39
BRAKE - DESCRIPTION, CONTROLLER ANTILOCK	8E-4
BRAKE - INSTALLATION, CABLES - PARKING	5-42
BRAKE - INSTALLATION, CONTROLLER ANTILOCK	8E-5
BRAKE - INSTALLATION, LEVER - PARKING	5-45
BRAKE - INSTALLATION, SHOES - PARKING	5-47
BRAKE - OPERATION, CONTROLLER ANTILOCK	8E-4
BRAKE - REMOVAL, CABLES - PARKING	5-40
BRAKE - REMOVAL, CONTROLLER ANTILOCK	8E-4
BRAKE - REMOVAL, LEVER - PARKING	5-44
BRAKE - REMOVAL, SHOES - PARKING	5-46
BRAKE BLEEDING - STANDARD PROCEDURE, BASE	5-3
BRAKE BOOSTER - DIAGNOSIS AND TESTING, POWER	5-28
BRAKE BOOSTER - INSTALLATION, POWER	5-30
BRAKE BOOSTER - REMOVAL, POWER	5-28
BRAKE CALIPER - INSTALLATION, FRONT DISC	5-18
BRAKE CALIPER - INSTALLATION, REAR DISC	5-22
BRAKE CALIPER - REMOVAL, FRONT DISC	5-15
BRAKE CALIPER - REMOVAL, REAR DISC	5-19
BRAKE DRUM - DIAGNOSIS AND TESTING	5-23
BRAKE DRUM MACHINING - STANDARD PROCEDURE	5-23
BRAKE FASTENER TORQUE, SPECIFICATIONS	5-4
BRAKE FLUID CONTAMINATION - DIAGNOSIS AND TESTING	5-25
BRAKE FLUID LEVEL CHECKING - STANDARD PROCEDURE	5-25
BRAKE FLUID LEVEL SWITCH - INSTALLATION	5-5
BRAKE FLUID LEVEL SWITCH - REMOVAL	5-5
BRAKE FLUID, SPECIFICATIONS	5-25
BRAKE LAMP SWITCH - ADJUSTMENT	8L-8
BRAKE LAMP SWITCH - DESCRIPTION	8L-6
BRAKE LAMP SWITCH - DIAGNOSIS AND TESTING	8L-6
BRAKE LAMP SWITCH - INSTALLATION	8L-7
BRAKE LAMP SWITCH - OPERATION	8L-6
BRAKE LAMP SWITCH - REMOVAL	8L-7
BRAKE PADS/SHOES - REAR DRUM - CLEANING	5-13
BRAKE PADS/SHOES - REAR DRUM - INSPECTION	5-13
BRAKE PADS/SHOES - REAR DRUM - INSTALLATION	5-13
BRAKE PADS/SHOES - REAR DRUM - REMOVAL	5-12
BRAKE PROPORTIONING - DESCRIPTION, ELECTRONIC VARIABLE	5-49
BRAKE PROPORTIONING - OPERATION, ELECTRONIC VARIABLE	5-51
BRAKE ROTOR - DIAGNOSIS AND TESTING	5-32
BRAKE ROTOR MACHINING - STANDARD PROCEDURE	5-35
BRAKE SHOES - ADJUSTMENT, DRUM	5-14
BRAKE SHOES - CLEANING, DISC	5-11,5-8
BRAKE SHOES - INSPECTION, DISC	5-11,5-8
BRAKE SHOES - INSTALLATION, FRONT DISC	5-8
BRAKE SHOES - INSTALLATION, REAR DISC	5-11
BRAKE SHOES - REMOVAL, FRONT DISC	5-6
BRAKE SHOES - REMOVAL, REAR DISC	5-9
BRAKE SYSTEM BLEEDING - STANDARD PROCEDURE, ANTILOCK	5-53

Description	Group-Page
BRAKE SYSTEM, SPECIAL TOOLS - BASE	5-4
BRAKE TUBES AND HOSES - DESCRIPTION	5-6
BRAKE TUBES AND HOSES - INSPECTION	5-6
BRAKE TUBES AND HOSES - OPERATION	5-6
BRAKES - BASE - CAUTION	5-2
BRAKES - BASE - WARNING	5-2
BRAKES - DESCRIPTION, ANTILOCK	5-49
BRAKES - OPERATION, ANTILOCK	5-50
BRAKE/TRANSMISSION SHIFT INTERLOCK CABLE VERIFICATION AND ADJUSTMENT, ADJUSTMENTS	21-221
BUCKLE - JR27 ONLY - INSTALLATION, FRONT SEAT BELT	8O-8
BUCKLE - JR27 ONLY - INSTALLATION, REAR SEAT BELT	8O-10
BUCKLE - JR27 ONLY - REMOVAL, FRONT SEAT BELT	8O-8
BUCKLE - JR27 ONLY - REMOVAL, REAR SEAT BELT	8O-10
BULB - INSTALLATION, DOME LAMP	8L-29
BULB - REMOVAL, DOME LAMP	8L-29
BUMPER - INSTALLATION, ADJUSTER	23-62
BUMPER - REMOVAL, ADJUSTER	23-62
BUMPER REINFORCEMENT - INSTALLATION, REAR	13-3
BUMPER REINFORCEMENT - REMOVAL, REAR	13-3
BUS COMMUNICATION RECEIVE - PCM INPUT - OPERATION, DATA	8E-9
BUS, OPERATION - PROGRAMMABLE COMMUNICATIONS INTERFACE (PCI)	14-19
BUSHING - ASSEMBLY, CLEVIS	2-19
BUSHING - ASSEMBLY, FRONT ISOLATOR	2-18
BUSHING - ASSEMBLY, REAR ISOLATOR	2-18
BUSHING - DISASSEMBLY, CLEVIS	2-17
BUSHING - DISASSEMBLY, FRONT ISOLATOR	2-17
BUSHING - DISASSEMBLY, REAR ISOLATOR	2-17
BUSHING - INSTALLATION, SHIFT SELECTOR SHAFT	21-39
BUSHING - INSTALLATION, STABILIZER BAR	2-30
BUSHING - REMOVAL, SHIFT SELECTOR SHAFT	21-39
BUSHING (FRONT) - REMOVAL, STABILIZER BAR	2-29
BUSHINGS - INSTALLATION, SHIFT RAIL	21-39
BUSHINGS - REMOVAL, SHIFT RAIL	21-39
BUSHINGS (DISC/DISC BRAKES) - ASSEMBLY, CALIPER GUIDE PIN	5-17,5-21
BUSHINGS (DISC/DISC BRAKES) - DISASSEMBLY, CALIPER GUIDE PIN	5-16,5-20
BUTTON BELL CRANK - INSTALLATION, LOCK	23-37
BUTTON BELL CRANK - REMOVAL, LOCK	23-37
CABLE - DESCRIPTION, SHIFT INTERLOCK	21-217
CABLE - DESCRIPTION, SPARK PLUG	8I-8
CABLE - DIAGNOSIS AND TESTING, ANTENNA BODY	8A-4
CABLE - INSTALLATION, ANTENNA BODY	8A-6
CABLE - INSTALLATION, EMERGENCY RELEASE	23-26
CABLE - INSTALLATION, GEAR SHIFT	21-28, 21-84
CABLE - INSTALLATION, GEARSHIFT	21-193
CABLE - INSTALLATION, LATCH RELEASE	23-64
CABLE - INSTALLATION, SHIFT INTERLOCK	21-220
CABLE - INSTALLATION, THROTTLE CONTROL	14-38
CABLE - OPERATION, SHIFT INTERLOCK	21-217
CABLE - REMOVAL, ANTENNA BODY	8A-6
CABLE - REMOVAL, EMERGENCY RELEASE	23-26
CABLE - REMOVAL, GEAR SHIFT	21-27,21-83
CABLE - REMOVAL, GEARSHIFT	21-191
CABLE - REMOVAL, LATCH RELEASE	23-64
CABLE - REMOVAL, SHIFT INTERLOCK	21-218
CABLE - REMOVAL, THROTTLE CONTROL	14-36
CABLE (2.0L/T350 MODELS) - DESCRIPTION, CLUTCH RELEASE	6-15
CABLE (2.0L/T350 MODELS) - INSTALLATION, CLUTCH RELEASE	6-16
CABLE (2.0L/T350 MODELS) - REMOVAL, CLUTCH RELEASE	6-15
CABLE RESISTANCE, SPECIFICATIONS - SPARK PLUG	8I-2
CABLE VERIFICATION AND ADJUSTMENT, ADJUSTMENTS - BRAKE/TRANSMISSION SHIFT INTERLOCK	21-221
CABLES - DESCRIPTION, BATTERY	8F-13
CABLES - DIAGNOSIS AND TESTING, BATTERY	8F-14
CABLES - INSTALLATION, BATTERY	8F-15
CABLES - OPERATION, BATTERY	8F-13
CABLES - PARKING BRAKE - INSTALLATION	5-42
CABLES - PARKING BRAKE - REMOVAL	5-40
CABLES - REMOVAL, BATTERY	8F-15
CALIPER - CLEANING	5-17,5-21
CALIPER - INSPECTION	5-17,5-21
CALIPER - INSTALLATION, FRONT DISC BRAKE	5-18
CALIPER - INSTALLATION, REAR DISC BRAKE	5-22
CALIPER - REMOVAL, FRONT DISC BRAKE	5-15
CALIPER - REMOVAL, REAR DISC BRAKE	5-19
CALIPER GUIDE PIN BUSHINGS (DISC/DISC BRAKES) - ASSEMBLY	5-17,5-21
CALIPER GUIDE PIN BUSHINGS (DISC/DISC BRAKES) - DISASSEMBLY	5-16,5-20
CALIPER PISTON AND SEAL - ASSEMBLY	5-17,5-21
CALIPER PISTON AND SEAL - DISASSEMBLY	5-16,5-20
CAM - ADJUSTMENT, TOP FRAME	23-15
CAMSHAFT END PLAY - STANDARD PROCEDURE, MEASURING	9-96
CAMSHAFT END-PLAY - STANDARD PROCEDURE	9-29
CAMSHAFT OIL SEAL(S) - INSTALLATION	9-28, 9-96
CAMSHAFT OIL SEAL(S) - REMOVAL	9-28,9-95
CAMSHAFT POSITION SENSOR - DESCRIPTION	8I-3
CAMSHAFT POSITION SENSOR - OPERATION	8I-3
CAMSHAFT SPROCKETS - INSTALLATION	9-134, 9-68
CAMSHAFT SPROCKETS - REMOVAL	9-133
CAMSHAFT SPROCKET(S) - REMOVAL	9-67
CAMSHAFT(S) - CLEANING	9-30,9-97
CAMSHAFT(S) - DESCRIPTION	9-171,9-29,9-96
CAMSHAFT(S) - INSPECTION	9-173,9-30,9-97
CAMSHAFT(S) - INSTALLATION	9-173,9-30,9-98
CAMSHAFT(S) - OPERATION	9-171,9-29,9-96
CAMSHAFT(S) - REMOVAL	9-172,9-29,9-97
CANISTER - DESCRIPTION, VAPOR	25-20
CANISTER - INSTALLATION, VAPOR	25-22
CANISTER - OPERATION, VAPOR	25-20
CANISTER - REMOVAL, VAPOR	25-21
CAP - DESCRIPTION, FUEL FILLER	25-15
CAP - DESCRIPTION, PRESSURE	7-36
CAP - OPERATION, FUEL FILLER	25-15
CAP - OPERATION, PRESSURE	7-37
CAP TESTING - DIAGNOSIS AND TESTING, PRESSURE	7-37
CAPACITIES, SPECIFICATIONS - FLUID	0-6
CAPACITOR - DESCRIPTION, IGNITION COIL	8I-6
CAPACITOR - INSTALLATION, IGNITION COIL	8I-6
CAPACITOR - REMOVAL, IGNITION COIL	8I-6
CARE - CLEANING, ALUMINUM WHEEL	22-12
CARRIER ASSEMBLY - DESCRIPTION, BALANCE SHAFTS	9-138
CARRIER ASSEMBLY - INSTALLATION, BALANCE SHAFTS	9-140
CARRIER ASSEMBLY - OPERATION, BALANCE SHAFTS	9-138
CARRIER ASSEMBLY - REMOVAL, BALANCE SHAFTS	9-139
CATALYTIC CONVERTER - 2.0L/2.4L - DESCRIPTION	11-6
CATALYTIC CONVERTER - 2.0L/2.4L - INSPECTION	11-7
CATALYTIC CONVERTER - 2.0L/2.4L - INSTALLATION	11-7
CATALYTIC CONVERTER - 2.0L/2.4L - OPERATION	11-6
CATALYTIC CONVERTER - 2.0L/2.4L - REMOVAL	11-6
CATALYTIC CONVERTER - FRONT - 2.7L - INSPECTION	11-8
CATALYTIC CONVERTER - FRONT - 2.7L - INSTALLATION	11-9
CATALYTIC CONVERTER - FRONT - 2.7L - REMOVAL	11-8
CATALYTIC CONVERTER - REAR - 2.7L - INSPECTION	11-9
CATALYTIC CONVERTER - REAR - 2.7L - INSTALLATION	11-10
CATALYTIC CONVERTER - REAR - 2.7L - REMOVAL	11-9
CAUTION, BRAKES - BASE	5-2
CAUTION, FRONT SUSPENSION	2-4
CAUTION, STEERING	19-1
CAUTIONS, WARNING - WARNINGS	2-32
CD CHANGER - DESCRIPTION	8A-6
CD CHANGER - INSTALLATION	8A-6
CD CHANGER - OPERATION	8A-6
CD CHANGER - REMOVAL	8A-6
CD CHANGER TRIM BEZEL - INSTALLATION	23-66
CD CHANGER TRIM BEZEL - REMOVAL	23-66
CENTER - DESCRIPTION, POWER DISTRIBUTION	8W-97-4
CENTER - INSTALLATION, POWER DISTRIBUTION	8W-97-5
CENTER - INSTALLATION, SEAT BELT & RETRACTOR - REAR	8O-16
CENTER - OPERATION, POWER DISTRIBUTION	8W-97-4
CENTER - REMOVAL, POWER DISTRIBUTION	8W-97-4
CENTER - REMOVAL, SEAT BELT & RETRACTOR - REAR	8O-16
CENTER BEZEL - INSTALLATION, INSTRUMENT PANEL	23-70
CENTER BEZEL - REMOVAL, INSTRUMENT PANEL	23-70
CENTER CONSOLE POWER OUTLET - INSTALLATION	8W-97-2
CENTER CONSOLE POWER OUTLET - REMOVAL	8W-97-1
CENTER HIGH MOUNTED STOP LAMP - INSTALLATION	8L-8
CENTER HIGH MOUNTED STOP LAMP - REMOVAL	8L-8
CENTER HIGH MOUNTED STOP LAMP UNIT - INSTALLATION	8L-9
CENTER HIGH MOUNTED STOP LAMP UNIT - JR27 ONLY - INSTALLATION	8L-9
CENTER HIGH MOUNTED STOP LAMP UNIT - JR27 ONLY - REMOVAL	8L-9
CENTER HIGH MOUNTED STOP LAMP UNIT - REMOVAL	8L-8
CENTERING - STANDARD PROCEDURE, CLOCK SPRING	8O-5
CERTIFICATION LABEL - DESCRIPTION, VEHICLE SAFETY	Intro.-10
CHAIN - INSTALLATION, TIMING	9-222
CHAIN - REMOVAL, TIMING	9-220
CHAIN COVER - INSTALLATION, TIMING	9-219
CHAIN COVER - REMOVAL, TIMING	9-219
CHANGE - STANDARD PROCEDURE, ENGINE OIL AND FILTER	9-121,9-206,9-54
CHANGER - DESCRIPTION, CD	8A-6
CHANGER - INSTALLATION, CD	8A-6
CHANGER - OPERATION, CD	8A-6
CHANGER - REMOVAL, CD	8A-6
CHANGER TRIM BEZEL - INSTALLATION, CD	23-66
CHANGER TRIM BEZEL - REMOVAL, CD	23-66
CHANNEL - INSTALLATION, SIDE VIEW MIRROR FLAG/DOOR GLASS	23-38
CHANNEL - REMOVAL, SIDE VIEW MIRROR FLAG/DOOR GLASS	23-38
CHARGE LEVEL - STANDARD PROCEDURE, SYSTEM	24-9
CHARGING - STANDARD PROCEDURE, BATTERY	8F-8
CHARGING A/C SYSTEM - STANDARD PROCEDURE	24-9

Description	Group-Page
CHARGING SYSTEM - DESCRIPTION	8F-18
CHARGING SYSTEM - OPERATION	8F-18
CHARTS - DIAGNOSIS AND TESTING, STEERING SYSTEM DIAGNOSIS	19-3
CHARTS - SPECIFICATIONS, COLOR CODE	23-93
CHATTER COMPLAINTS - DIAGNOSIS AND TESTING, CLUTCH	6-6
CHECK - DIAGNOSIS AND TESTING, COOLING SYSTEM FLOW	7-21
CHECK - DIAGNOSIS AND TESTING, EXHAUST SYSTEM RESTRICTION	11-4
CHECK - STANDARD PROCEDURE, ENGINE OIL LEVEL	9-207
CHECK - STANDARD PROCEDURE, FLUID LEVEL	21-82
CHECK - STANDARD PROCEDURE, OIL PUMP VOLUME	21-214
CHECK, ROUTINE - COOLANT LEVEL	7-23
CHECK, STANDARD PROCEDURE - ENGINE OIL LEVEL	9-121,9-54
CHECK, STANDARD PROCEDURE - FLUID LEVEL AND CONDITION	21-188
CHECK STRAP - INSTALLATION	23-28
CHECK STRAP - INSTALLATION, REAR	23-46
CHECK STRAP - REMOVAL	23-28
CHECK STRAP - REMOVAL, REAR	23-46
CHECKING - STANDARD PROCEDURE, BRAKE FLUID LEVEL	5-25
CHECKING - STANDARD PROCEDURE, POWER STEERING FLUID LEVEL	19-34
CHECKING ACCESSORY DRIVE BELT TENSION - 2.7L - STANDARD PROCEDURE	7-5
CHECKING ENGINE OIL PRESSURE - DIAGNOSIS AND TESTING	9-121,9-206,9-54
CHILD RESTRAINT ANCHOR - DESCRIPTION	8O-4
CHILD RESTRAINT ANCHOR - INSTALLATION	8O-4
CHILD RESTRAINT ANCHOR - OPERATION	8O-4
CHILD RESTRAINT ANCHOR - REMOVAL	8O-4
CHILD TETHER CUP - INSTALLATION	8O-4
CHILD TETHER CUP - REMOVAL	8O-4
CHILD TETHER CUP COVER - INSTALLATION	8O-5
CHILD TETHER CUP COVER - REMOVAL	8O-5
CHIME CONDITIONS - DIAGNOSIS AND TESTING	8B-2
CHIME/BUZZER - DESCRIPTION	8B-1
CHIME/BUZZER - OPERATION	8B-1
CIRCUIT - STANDARD PROCEDURE, BLEEDING CLUTCH HYDRAULIC	6-6
CIRCUIT FUNCTIONS - DESCRIPTION	8W-01-6
CIRCUIT INFORMATION - DESCRIPTION	8W-01-5
CIRCUIT RESISTANCE TEST - DIAGNOSIS AND TESTING, FEED	8F-28
CIRCUIT TEST - DIAGNOSIS AND TESTING, CONTROL	8F-24
CIRCUIT TEST - DIAGNOSIS AND TESTING, FEED	8F-29
CIRCUITS - OPERATION, NON-MONITORED	25-5
CIRCUITS AND VALVES - OPERATION, HYDRAULIC	5-60
CLAMPS - DESCRIPTION, HOSE	7-34
CLAMPS - OPERATION, HOSE	7-34
CLEAN, CLEANING	21-108,21-40
CLEVIS BUSHING - ASSEMBLY	2-19
CLEVIS BUSHING - DISASSEMBLY	2-17
CLOCK SPRING - DESCRIPTION	8O-5
CLOCK SPRING - INSTALLATION	8O-6
CLOCK SPRING - OPERATION	8O-5
CLOCK SPRING - REMOVAL	8O-5
CLOCK SPRING CENTERING - STANDARD PROCEDURE	8O-5
CLUSTER - DESCRIPTION, INSTRUMENT	8J-1
CLUSTER - DIAGNOSIS AND TESTING, INSTRUMENT	8J-1
CLUSTER - INSTALLATION, INSTRUMENT	8J-2
CLUSTER - OPERATION, INSTRUMENT	8J-1
CLUSTER - REMOVAL, INSTRUMENT	8J-2
CLUSTER BEZEL - INSTALLATION, INSTRUMENT PANEL	23-70
CLUSTER BEZEL - REMOVAL, INSTRUMENT PANEL	23-70
CLUSTER ILLUMINATION AND WARNING LAMPS - INSTALLATION	8L-28
CLUSTER ILLUMINATION AND WARNING LAMPS - REMOVAL	8L-28
CLUSTER MASK/LENS - INSTALLATION, INSTRUMENT	8J-2
CLUSTER MASK/LENS - REMOVAL, INSTRUMENT	8J-2
CLUTCH - DESCRIPTION	6-1
CLUTCH - DESCRIPTION, A/C COMPRESSOR	24-13
CLUTCH - DESCRIPTION, MODULAR	6-17
CLUTCH - INSTALLATION, A/C COMPRESSOR	24-15
CLUTCH - INSTALLATION, MODULAR	6-18
CLUTCH - OPERATION	6-2
CLUTCH - OPERATION, A/C COMPRESSOR	24-13
CLUTCH - REMOVAL, A/C COMPRESSOR	24-13
CLUTCH - REMOVAL, MODULAR	6-18
CLUTCH AIR PRESSURE TESTS - DIAGNOSIS AND TESTING	21-116
CLUTCH ASSEMBLY - ASSEMBLY, INPUT	21-204
CLUTCH ASSEMBLY - DISASSEMBLY, INPUT	21-197
CLUTCH CHATTER COMPLAINTS - DIAGNOSIS AND TESTING	6-6
CLUTCH COIL - DESCRIPTION, A/C COMPRESSOR	24-16
CLUTCH COIL - DIAGNOSIS AND TESTING, COMPRESSOR	24-16
CLUTCH COIL - OPERATION, A/C COMPRESSOR	24-16
CLUTCH COVER AND DISC RUNOUT - DIAGNOSIS AND TESTING	6-5
CLUTCH HYDRAULIC CIRCUIT - STANDARD PROCEDURE, BLEEDING	6-6
CLUTCH MASTER CYLINDER (2.7L/T850 MODELS) - INSTALLATION	6-9
CLUTCH MASTER CYLINDER (2.7L/T850 MODELS) - REMOVAL	6-8
CLUTCH PEDAL - INSTALLATION	6-10
CLUTCH PEDAL - REMOVAL	6-9
CLUTCH PEDAL INTERLOCK SWITCH - DIAGNOSIS AND TESTING	6-10
CLUTCH PEDAL INTERLOCK SWITCH - INSTALLATION	6-11
CLUTCH PEDAL INTERLOCK SWITCH - REMOVAL	6-11
CLUTCH RELAY - DESCRIPTION, A/C COMPRESSOR	24-16
CLUTCH RELAY - DIAGNOSIS AND TESTING, A/C COMPRESSOR	24-16
CLUTCH RELAY - INSTALLATION, A/C COMPRESSOR	24-17
CLUTCH RELAY - OPERATION, A/C COMPRESSOR	24-16
CLUTCH RELAY - REMOVAL, A/C COMPRESSOR	24-17
CLUTCH RELEASE BEARING AND LEVER - DESCRIPTION	6-12
CLUTCH RELEASE BEARING AND LEVER - OPERATION	6-12
CLUTCH RELEASE CABLE (2.0L/T350 MODELS) - DESCRIPTION	6-15
CLUTCH RELEASE CABLE (2.0L/T350 MODELS) - INSTALLATION	6-16
CLUTCH RELEASE CABLE (2.0L/T350 MODELS) - REMOVAL	6-15
CLUTCH SLAVE CYLINDER (2.7L/T850 MODELS) - DESCRIPTION	6-16
CLUTCH SLAVE CYLINDER (2.7L/T850 MODELS) - INSTALLATION	6-17
CLUTCH SLAVE CYLINDER (2.7L/T850 MODELS) - OPERATION	6-16
CLUTCH SLAVE CYLINDER (2.7L/T850 MODELS) - REMOVAL	6-16
CLUTCH, SPECIFICATIONS	6-7
CLUTCH SYSTEM - DIAGNOSIS AND TESTING	6-3
CLUTCHES - DESCRIPTION, DRIVING	21-181
CLUTCHES - DESCRIPTION, HOLDING	21-197
CLUTCHES - OPERATION, DRIVING	21-181
CLUTCHES - OPERATION, HOLDING	21-197
CODE - DESCRIPTION, PAINT	23-94
CODE CHARTS - SPECIFICATIONS, COLOR	23-93
CODE PLATE - DESCRIPTION, BODY	Intro.-1
CODES - STANDARD PROCEDURE, OBTAINING DIAGNOSTIC TROUBLE	8E-10
COIL - DESCRIPTION, A/C COMPRESSOR CLUTCH	24-16
COIL - DESCRIPTION, IGNITION	8I-4
COIL - DIAGNOSIS AND TESTING, COMPRESSOR CLUTCH	24-16
COIL - OPERATION, A/C COMPRESSOR CLUTCH	24-16
COIL - OPERATION, IGNITION	8I-4
COIL CAPACITOR - DESCRIPTION, IGNITION	8I-6
COIL CAPACITOR - INSTALLATION, IGNITION	8I-6
COIL CAPACITOR - REMOVAL, IGNITION	8I-6
COLLAR - INSTALLATION, STRUCTURAL	9-117, 9-200,9-49
COLLAR - REMOVAL, STRUCTURAL	9-117, 9-199,9-49
COLOR CODE CHARTS - SPECIFICATIONS	23-93
COLUMN - DESCRIPTION	19-10
COLUMN - DIAGNOSIS AND TESTING, STEERING	19-11
COLUMN - INSTALLATION, STEERING	19-15
COLUMN - OPERATION	19-10
COLUMN - REMOVAL, STEERING	19-11
COLUMN - WARNING	19-11
COLUMN FASTENER TORQUE, SPECIFICATIONS	19-17
COLUMN INTERMEDIATE SHAFT - DIAGNOSIS AND TESTING, STEERING	19-17
COMBINATION FLASHER - DESCRIPTION	8L-9
COMBINATION FLASHER - DIAGNOSIS AND TESTING	8L-10
COMBINATION FLASHER - INSTALLATION	8L-11
COMBINATION FLASHER - OPERATION	8L-9
COMBINATION FLASHER - REMOVAL	8L-11
COMBUSTION PRESSURE LEAKAGE TEST - DIAGNOSIS AND TESTING, CYLINDER	9-150,9-78,9-9
COMMON PROBLEM CAUSES - DIAGNOSIS AND TESTING	21-3,21-52
COMMUNICATION RECEIVE - PCM INPUT - OPERATION, DATA BUS	8E-9
COMMUNICATIONS INTERFACE (PCI) BUS, OPERATION - PROGRAMMABLE	14-19
COMPAPSS MINI TRIP COMPUTER/ TRAVELER ILLUMINATION LAMP - INSTALLATION	8L-29
COMPAPSS MINI TRIP COMPUTER/ TRAVELER ILLUMINATION LAMP - REMOVAL	8L-29
COMPASS MINI-TRIP COMPUTER - DIAGNOSIS AND TESTING	8M-2
COMPASS/MINI-TRIP COMPUTER - DESCRIPTION	8M-1
COMPASS/MINI-TRIP COMPUTER - INSTALLATION	8M-3
COMPASS/MINI-TRIP COMPUTER - OPERATION	8M-1
COMPASS/MINI-TRIP COMPUTER - REMOVAL	8M-2
COMPLAINTS - DIAGNOSIS AND TESTING, CLUTCH CHATTER	6-6
COMPRESSION PRESSURE TEST - DIAGNOSIS AND TESTING, CYLINDER	9-150, 9-78,9-9
COMPRESSOR - DESCRIPTION, A/C	24-41
COMPRESSOR - DIAGNOSIS AND TESTING, A/C	24-41
COMPRESSOR - INSTALLATION, A/C	24-42
COMPRESSOR - OPERATION, A/C	24-41
COMPRESSOR - REMOVAL, A/C	24-42
COMPRESSOR CLUTCH - DESCRIPTION, A/C	24-13
COMPRESSOR CLUTCH - INSTALLATION, A/C	24-15
COMPRESSOR CLUTCH - OPERATION, A/C	24-13
COMPRESSOR CLUTCH - REMOVAL, A/C	24-13
COMPRESSOR CLUTCH COIL - DESCRIPTION, A/C	24-16
COMPRESSOR CLUTCH COIL - DIAGNOSIS AND TESTING	24-16
COMPRESSOR CLUTCH COIL - OPERATION, A/C	24-16

Description	Group-Page
COMPRESSOR CLUTCH RELAY - DESCRIPTION, A/C	24-16
COMPRESSOR CLUTCH RELAY - DIAGNOSIS AND TESTING, A/C	24-16
COMPRESSOR CLUTCH RELAY - INSTALLATION, A/C	24-17
COMPRESSOR CLUTCH RELAY - OPERATION, A/C	24-16
COMPRESSOR CLUTCH RELAY - REMOVAL, A/C	24-17
COMPUTER - DESCRIPTION, COMPASS/ MINI-TRIP	8M-1
COMPUTER - DIAGNOSIS AND TESTING, COMPASS MINI-TRIP	8M-2
COMPUTER - INSTALLATION, COMPASS/ MINI-TRIP	8M-3
COMPUTER - OPERATION, COMPASS/ MINI-TRIP	8M-1
COMPUTER - REMOVAL, COMPASS/ MINI-TRIP	8M-2
COMPUTER/TRAVELER ILLUMINATION LAMP - INSTALLATION, COMPAPSS MINI TRIP	8L-29
COMPUTER/TRAVELER ILLUMINATION LAMP - REMOVAL, COMPAPSS MINI TRIP	8L-29
CONCENTRATION TESTING - DIAGNOSIS AND TESTING, COOLANT	7-26
CONDENSER - DESCRIPTION, A/C	24-42
CONDENSER - INSTALLATION, A/C	24-43
CONDENSER - OPERATION, A/C	24-43
CONDENSER - REMOVAL, A/C	24-43
CONDITION CHECK, STANDARD PROCEDURE - FLUID LEVEL	21-188
CONDITIONING - WARNING, HEATING & AIR	24-1
CONDITIONING, SPECIFICATIONS - AIR	24-11
CONDITIONING SYSTEM - DIAGNOSIS AND TESTING, AIR	24-3
CONDITIONS - DIAGNOSIS AND TESTING, CHIME	8B-2
CONNECTING ROD - DESCRIPTION, PISTON	9-111,9-194,9-44
CONNECTING ROD - INSTALLATION, PISTON	9-113,9-195,9-46
CONNECTING ROD - REMOVAL, PISTON	9-112, 9-194,9-44
CONNECTING ROD AND BEARING FITTING - STANDARD PROCEDURE	9-186
CONNECTING ROD, FITTING	9-113,9-47
CONNECTOR - INSTALLATION	8W-01-11
CONNECTOR - INSTALLATION, COOLANT OUTLET	7-28
CONNECTOR - REMOVAL	8W-01-11
CONNECTOR - REMOVAL, COOLANT OUTLET	7-27
CONNECTOR, GROUND AND SPLICE INFORMATION - DESCRIPTION	8W-01-7
CONNECTOR/GROUND/SPLICE LOCATION - DESCRIPTION	8W-91-1
CONSOLE - INSTALLATION, FLOOR	23-83
CONSOLE - INSTALLATION, FORWARD INSTRUMENT PANEL	23-84
CONSOLE - REMOVAL, FLOOR	23-83
CONSOLE - REMOVAL, FORWARD INSTRUMENT PANEL	23-84
CONSOLE COURTESY LAMP - JR27 ONLY - INSTALLATION	8L-29
CONSOLE COURTESY LAMP - JR27 ONLY - REMOVAL	8L-29
CONSOLE POWER OUTLET - INSTALLATION, CENTER	8W-97-2
CONSOLE POWER OUTLET - REMOVAL, CENTER	8W-97-1
CONTAINER - 2.0L/2.4L - DESCRIPTION, COOLANT RECOVERY	7-28
CONTAINER - 2.0L/2.4L - INSTALLATION, COOLANT RECOVERY	7-29
CONTAINER - 2.0L/2.4L - OPERATION, COOLANT RECOVERY	7-28
CONTAINER - 2.0L/2.4L - REMOVAL, COOLANT RECOVERY	7-28
CONTAINER - 2.7L - DESCRIPTION, COOLANT PRESSURE	7-29
CONTAINER - 2.7L - INSTALLATION, COOLANT PRESSURE	7-29
CONTAINER - 2.7L - OPERATION, COOLANT PRESSURE	7-29
CONTAINER - 2.7L - REMOVAL, COOLANT PRESSURE	7-29
CONTAMINATION - DIAGNOSIS AND TESTING, BRAKE FLUID	5-25
CONTINUITY - STANDARD PROCEDURE, TESTING	8W-01-9
CONTROL ARM - DESCRIPTION, LOWER	2-14
CONTROL ARM - DESCRIPTION, UPPER	2-30, 2-47
CONTROL ARM - DIAGNOSIS AND TESTING, LOWER	2-14
CONTROL ARM - INSPECTION, UPPER	2-31, 2-50
CONTROL ARM - INSTALLATION, UPPER	2-31, 2-51
CONTROL ARM - OPERATION, LOWER	2-14
CONTROL ARM - OPERATION, UPPER	2-30,2-47
CONTROL ARM - REMOVAL, LOWER	2-14
CONTROL ARM - REMOVAL, UPPER	2-31,2-47
CONTROL CABLE - INSTALLATION, THROTTLE	14-38
CONTROL CABLE - REMOVAL, THROTTLE	14-36
CONTROL CIRCUIT TEST - DIAGNOSIS AND TESTING	8F-24
CONTROL, DESCRIPTION - INTERACTIVE SPEED	8P-1
CONTROL INFORMATION LABEL - DESCRIPTION, VEHICLE EMISSION	25-1
CONTROL MODULE - DESCRIPTION, BODY	8E-2
CONTROL MODULE - DESCRIPTION, TRANSMISSION	8E-15
CONTROL MODULE - INSTALLATION, BODY	8E-3
CONTROL MODULE - OPERATION, BODY	8E-3
CONTROL MODULE - OPERATION, TRANSMISSION	8E-15
CONTROL MODULE - REMOVAL, BODY	8E-3
CONTROL MOTOR - DESCRIPTION, IDLE AIR	14-27
CONTROL MOTOR - OPERATION, IDLE AIR	14-27
CONTROL RELAY - DESCRIPTION, TRANSMISSION	21-236
CONTROL RELAY - OPERATION, TRANSMISSION	21-236
CONTROL SWITCH - INSTALLATION, SUNROOF	23-126
CONTROL SWITCH - INSTALLATION, TRACTION	5-60
CONTROL SWITCH - REMOVAL, SUNROOF	23-126
CONTROL SWITCH - REMOVAL, TRACTION	5-59
CONTROL SYSTEM - OPERATION, EVAPORATION	25-11
CONTROL TIMER MODULE - DIAGNOSIS AND TESTING, SEAT BELT	8O-12
CONTROL TIMER MODULE - JR27 - EXPORT - DESCRIPTION, SEAT BELT	8O-12
CONTROL TIMER MODULE - JR27 - EXPORT - INSTALLATION, SEAT BELT	8O-14
CONTROL TIMER MODULE - JR27 - EXPORT - OPERATION, SEAT BELT	8O-12
CONTROL TIMER MODULE - JR27 - EXPORT - REMOVAL, SEAT BELT	8O-14
CONTROLLER - DESCRIPTION, OCCUPANT RESTRAINT	8O-9
CONTROLLER - INSTALLATION, NGC	8E-13
CONTROLLER - INSTALLATION, OCCUPANT RESTRAINT	8O-9
CONTROLLER - INSTALLATION, SBEC	8E-13
CONTROLLER - OPERATION, 8-VOLT SUPPLY - PCM OUTPUT - SBEC	8E-10
CONTROLLER - OPERATION, OCCUPANT RESTRAINT	8O-9
CONTROLLER - REMOVAL, NGC	8E-12
CONTROLLER - REMOVAL, OCCUPANT RESTRAINT	8O-9
CONTROLLER - REMOVAL, SBEC	8E-11
CONTROLLER ANTILOCK BRAKE - DESCRIPTION	8E-4
CONTROLLER ANTILOCK BRAKE - INSTALLATION	8E-5
CONTROLLER ANTILOCK BRAKE - OPERATION	8E-4
CONTROLLER ANTILOCK BRAKE - REMOVAL	8E-4
CONVERTER - 2.0L/2.4L - DESCRIPTION, CATALYTIC	11-6
CONVERTER - 2.0L/2.4L - INSPECTION, CATALYTIC	11-7
CONVERTER - 2.0L/2.4L - INSTALLATION, CATALYTIC	11-7
CONVERTER - 2.0L/2.4L - OPERATION, CATALYTIC	11-6
CONVERTER - 2.0L/2.4L - REMOVAL, CATALYTIC	11-6
CONVERTER - DESCRIPTION, TORQUE	21-230
CONVERTER - FRONT - 2.7L - INSPECTION, CATALYTIC	11-8
CONVERTER - FRONT - 2.7L - INSTALLATION, CATALYTIC	11-9
CONVERTER - FRONT - 2.7L - REMOVAL, CATALYTIC	11-8
CONVERTER - INSTALLATION, TORQUE	21-236
CONVERTER - OPERATION, TORQUE	21-234
CONVERTER - REAR - 2.7L - INSPECTION, CATALYTIC	11-9
CONVERTER - REAR - 2.7L - INSTALLATION, CATALYTIC	11-10
CONVERTER - REAR - 2.7L - REMOVAL, CATALYTIC	11-9
CONVERTER - REMOVAL, TORQUE	21-235
CONVERTER HOUSING FLUID LEAKAGE - DIAGNOSIS AND TESTING, TORQUE	21-117
CONVERTIBLE TOP - ADJUSTMENT	23-14
CONVERTIBLE TOP REAR WINDOW - INSTALLATION	23-21
CONVERTIBLE TOP REAR WINDOW - REMOVAL	23-20
CONVERTIBLE TOP STORAGE - INSTALLATION	23-22
CONVERTIBLE TOP STORAGE - REMOVAL	23-22
CONVERTIBLE TOP TORQUE - SPECIFICATIONS	23-17
COOLANT - DESCRIPTION, ENGINE	7-26
COOLANT - DESCRIPTION, ENGINE	0-3
COOLANT, ADDING ADDITIONAL	7-27
COOLANT CONCENTRATION TESTING - DIAGNOSIS AND TESTING	7-26
COOLANT LEVEL CHECK, ROUTINE	7-23
COOLANT OUTLET CONNECTOR - INSTALLATION	7-28
COOLANT OUTLET CONNECTOR - REMOVAL	7-27
COOLANT PRESSURE CONTAINER - 2.7L - DESCRIPTION	7-29
COOLANT PRESSURE CONTAINER - 2.7L - INSTALLATION	7-29
COOLANT PRESSURE CONTAINER - 2.7L - OPERATION	7-29
COOLANT PRESSURE CONTAINER - 2.7L - REMOVAL	7-29
COOLANT RECOVERY CONTAINER - 2.0L/2.4L - DESCRIPTION	7-28
COOLANT RECOVERY CONTAINER - 2.0L/2.4L - INSTALLATION	7-29
COOLANT RECOVERY CONTAINER - 2.0L/2.4L - OPERATION	7-28
COOLANT RECOVERY CONTAINER - 2.0L/2.4L - REMOVAL	7-28
COOLANT SERVICE - STANDARD PROCEDURE	7-27
COOLANT TEMPERATURE SENSOR - DESCRIPTION, ENGINE	7-31
COOLANT TEMPERATURE SENSOR - INSTALLATION, ENGINE	7-32
COOLANT TEMPERATURE SENSOR - OPERATION, ENGINE	7-31
COOLANT TEMPERATURE SENSOR - REMOVAL, ENGINE	7-31
COOLANT THERMOSTAT TESTING - DIAGNOSIS AND TESTING, ENGINE	7-32
COOLER - CLEANING, TRANSMISSION OIL	7-46
COOLER - DESCRIPTION, TRANSMISSION OIL	7-46
COOLER - INSPECTION, TRANSMISSION OIL	7-46
COOLER - INSTALLATION, TRANSMISSION OIL	7-46

Description	Group-Page
COOLER - OPERATION, TRANSMISSION OIL	7-46
COOLER - REMOVAL, TRANSMISSION OIL	7-46
COOLER HOSES - DESCRIPTION, TRANSMISSION	7-46
COOLING SYSTEM - DESCRIPTION	7-11
COOLING SYSTEM AERATION - DIAGNOSIS AND TESTING	7-22
COOLING SYSTEM DEAERATION - DIAGNOSIS AND TESTING	7-23
COOLING SYSTEM DIAGNOSIS - DIAGNOSIS AND TESTING	7-15
COOLING SYSTEM, DRAINING	7-24
COOLING SYSTEM, FILLING	7-24
COOLING SYSTEM FLOW CHECK - DIAGNOSIS AND TESTING	7-21
COOLING SYSTEM LEAK TESTING - DIAGNOSIS AND TESTING	7-22
COOLING SYSTEM PRESSURE RELIEF TESTING - DIAGNOSIS AND TESTING	7-37
COOLING SYSTEM, SPECIAL TOOLS	7-3
CORE - DESCRIPTION, HEATER	24-50
CORE - DESCRIPTION, SERVICE PORT VALVE	24-50
CORE - INSTALLATION, HEATER	24-51
CORE - OPERATION, HEATER	24-50
CORE - OPERATION, SERVICE PORT VALVE	24-50
CORE - REMOVAL, HEATER	24-50
CORE AND OIL GALLERY PLUGS - STANDARD PROCEDURE, ENGINE	9-13,9-153, 9-82
COURTESY LAMP - JR27 ONLY - INSTALLATION, CONSOLE	8L-29
COURTESY LAMP - JR27 ONLY - INSTALLATION, DOOR	8L-30
COURTESY LAMP - JR27 ONLY - REMOVAL, CONSOLE	8L-29
COURTESY LAMP - JR27 ONLY - REMOVAL, DOOR	8L-30
COVER - CLEANING, CYLINDER HEAD	9-31,9-99
COVER - DESCRIPTION, SHIFT	21-107
COVER - INSPECTION, CYLINDER HEAD	9-31, 9-99
COVER - INSTALLATION, CHILD TETHER CUP	8O-5
COVER - INSTALLATION, COWL	23-54
COVER - INSTALLATION, CYLINDER HEAD	9-31,9-99
COVER - INSTALLATION, DRIVER AIRBAG TRIM	8O-8
COVER - INSTALLATION, FOLDING TOP	23-18
COVER - INSTALLATION, FRONT SEAT CUSHION	23-110
COVER - INSTALLATION, INSTRUMENT PANEL END	23-71
COVER - INSTALLATION, INSTRUMENT PANEL TOP	23-73
COVER - INSTALLATION, REAR SEAT CUSHION	23-113
COVER - INSTALLATION, TIMING CHAIN	9-219
COVER - LEFT - INSTALLATION, CYLINDER HEAD	9-174
COVER - LEFT - REMOVAL, CYLINDER HEAD	9-174
COVER - REMOVAL, CHILD TETHER CUP	8O-5
COVER - REMOVAL, COWL	23-53
COVER - REMOVAL, CYLINDER HEAD	9-31,9-99
COVER - REMOVAL, DRIVER AIRBAG TRIM	8O-7
COVER - REMOVAL, FOLDING TOP	23-17
COVER - REMOVAL, FRONT SEAT CUSHION	23-110
COVER - REMOVAL, INSTRUMENT PANEL END	23-71
COVER - REMOVAL, INSTRUMENT PANEL TOP	23-73
COVER - REMOVAL, REAR SEAT CUSHION	23-113
COVER - REMOVAL, TIMING CHAIN	9-219
COVER - RIGHT - INSTALLATION, CYLINDER HEAD	9-175
COVER - RIGHT - REMOVAL, CYLINDER HEAD	9-175
COVER AND DISC RUNOUT - DIAGNOSIS AND TESTING, CLUTCH	6-5
COVER(S) - INSTALLATION, TIMING BELT	9-132,9-65
COVER(S) - REMOVAL, TIMING BELT	9-130,9-64
COWL COVER - INSTALLATION	23-54
COWL COVER - REMOVAL	23-53
COWL TRIM PANEL - INSTALLATION	23-82
COWL TRIM PANEL - REMOVAL	23-82
CRANK - INSTALLATION, LOCK BUTTON BELL	23-37
CRANK - REMOVAL, LOCK BUTTON BELL	23-37
CRANKSHAFT - DESCRIPTION	9-187
CRANKSHAFT - INSPECTION	9-105,9-39
CRANKSHAFT - INSTALLATION	9-106,9-188,9-39
CRANKSHAFT - REMOVAL	9-104,9-187,9-37
CRANKSHAFT END PLAY - STANDARD PROCEDURE	9-187,9-37
CRANKSHAFT END PLAY - STANDARD PROCEDURE, MEASURING	9-104
CRANKSHAFT MAIN BEARING FITTING - STANDARD PROCEDURE	9-190
CRANKSHAFT OIL SEAL - FRONT - INSTALLATION	9-108,9-192,9-42
CRANKSHAFT OIL SEAL - FRONT - REMOVAL	9-108,9-191,9-41
CRANKSHAFT OIL SEAL - REAR - INSTALLATION	9-109,9-192,9-43
CRANKSHAFT OIL SEAL - REAR - REMOVAL	9-109,9-192,9-43
CRANKSHAFT POSITION SENSOR - DESCRIPTION	14-22
CRANKSHAFT POSITION SENSOR - OPERATION	14-22
CRANKSHAFT REAR OIL SEAL RETAINER - INSTALLATION	9-193
CRANKSHAFT REAR OIL SEAL RETAINER - REMOVAL	9-193
CRANKSHAFT SPROCKET - INSTALLATION	9-134,9-226,9-68
CRANKSHAFT SPROCKET - REMOVAL	9-133, 9-222,9-67
CROSSMEMBER - DESCRIPTION, REAR SUSPENSION	13-10
CROSSMEMBER - INSTALLATION, FRONT SUSPENSION	13-9
CROSSMEMBER - INSTALLATION, RADIATOR SUPPORT	23-58
CROSSMEMBER - INSTALLATION, REAR SUSPENSION	13-12
CROSSMEMBER - REMOVAL, FRONT SUSPENSION	13-9
CROSSMEMBER - REMOVAL, RADIATOR SUPPORT	23-57
CROSSMEMBER - REMOVAL, REAR SUSPENSION	13-10
CROSSOVER SHAFT - INSTALLATION, SHIFT	21-39
CROSSOVER SHAFT - REMOVAL, SHIFT	21-38
CROSS-UNDER PIPE - 2.7L - INSTALLATION	11-11
CROSS-UNDER PIPE - 2.7L - REMOVAL	11-11
CROSS-UNDER PIPE TO RESONATOR PIPE - 2.7L - INSTALLATION, EXHAUST PIPE	11-12
CROSS-UNDER PIPE TO RESONATOR PIPE - 2.7L - REMOVAL, EXHAUST PIPE	11-12
CUP - INSTALLATION, CHILD TETHER	8O-4
CUP - REMOVAL, CHILD TETHER	8O-4
CUP COVER - INSTALLATION, CHILD TETHER	8O-5
CUP COVER - REMOVAL, CHILD TETHER	8O-5
CUP PLUG SERVICE - STANDARD PROCEDURE, CYLINDER HEAD OIL GALLERY	9-167
CUPS - INSTALLATION, DIFFERENTIAL BEARING	21-27
CUPS - REMOVAL, DIFFERENTIAL BEARING	21-26
CURB HEIGHT MEASUREMENT - STANDARD PROCEDURE	2-57
CURTAIN AIRBAG - DESCRIPTION	8O-6
CURTAIN AIRBAG - INSTALLATION	8O-6
CURTAIN AIRBAG - OPERATION	8O-6
CURTAIN AIRBAG - REMOVAL	8O-6
CUSHION COVER - INSTALLATION, FRONT SEAT	23-110
CUSHION COVER - INSTALLATION, REAR SEAT	23-113
CUSHION COVER - REMOVAL, FRONT SEAT	23-110
CUSHION COVER - REMOVAL, REAR SEAT	23-113
CV BOOT - INNER - INSTALLATION	3-10
CV BOOT - INNER - REMOVAL	3-9
CV BOOT - OUTER - INSTALLATION	3-15
CV BOOT - OUTER - REMOVAL	3-14
CYLINDER - DESCRIPTION, LOCK	23-38
CYLINDER - DESCRIPTION, STANDARD 4	8I-7
CYLINDER - INSTALLATION, 4	8F-22,8F-31
CYLINDER - INSTALLATION, 4	14-24,14-26, 14-28,14-31,14-36,14-39,14-9
CYLINDER - INSTALLATION, 4	8I-4,8I-5,8I-7
CYLINDER - INSTALLATION, DECKLID LOCK	23-25
CYLINDER - INSTALLATION, DOWNSTREAM 1/2 4	14-33
CYLINDER - INSTALLATION, HYDRAULIC	23-19
CYLINDER - INSTALLATION, LOCK	23-38
CYLINDER - INSTALLATION, MASTER	5-28
CYLINDER - INSTALLATION, UPSTREAM 1/1 4	14-34
CYLINDER - INSTALLATION, WHEEL	5-38
CYLINDER - REMOVAL, 4	8F-20,8F-29
CYLINDER - REMOVAL, 4	14-24,14-25,14-28, 14-30,14-34,14-38,14-8
CYLINDER - REMOVAL, 4	8I-3,8I-5,8I-7
CYLINDER - REMOVAL, DECKLID LOCK	23-25
CYLINDER - REMOVAL, DOWNSTREAM 1/2 4	14-32
CYLINDER - REMOVAL, HYDRAULIC	23-19
CYLINDER - REMOVAL, LOCK	23-38
CYLINDER - REMOVAL, MASTER	5-27
CYLINDER - REMOVAL, UPSTREAM 1/1 4	14-33
CYLINDER - REMOVAL, WHEEL	5-38
CYLINDER (2.7L/T850 MODELS) - DESCRIPTION, CLUTCH SLAVE	6-16
CYLINDER (2.7L/T850 MODELS) - INSTALLATION, CLUTCH MASTER	6-9
CYLINDER (2.7L/T850 MODELS) - INSTALLATION, CLUTCH SLAVE	6-17
CYLINDER (2.7L/T850 MODELS) - OPERATION, CLUTCH SLAVE	6-16
CYLINDER (2.7L/T850 MODELS) - REMOVAL, CLUTCH MASTER	6-8
CYLINDER (2.7L/T850 MODELS) - REMOVAL, CLUTCH SLAVE	6-16
CYLINDER BLEEDING - STANDARD PROCEDURE, MASTER	5-27
CYLINDER BORE FITTING - STANDARD PROCEDURE, PISTON TO	9-111,9-44
CYLINDER BORE HONING - STANDARD PROCEDURE	9-103,9-184,9-36
CYLINDER COMBUSTION PRESSURE LEAKAGE TEST - DIAGNOSIS AND TESTING	9-150,9-78,9-9
CYLINDER COMPRESSION PRESSURE TEST - DIAGNOSIS AND TESTING	9-150,9-78, 9-9
CYLINDER HEAD - CLEANING	9-170,9-26,9-94
CYLINDER HEAD - DESCRIPTION	9-166,9-24, 9-92
CYLINDER HEAD - INSPECTION	9-170,9-26,9-94
CYLINDER HEAD - INSTALLATION	9-170,9-27, 9-95
CYLINDER HEAD - REMOVAL	9-168,9-25,9-93
CYLINDER HEAD COVER - CLEANING	9-31,9-99
CYLINDER HEAD COVER - INSPECTION	9-31, 9-99
CYLINDER HEAD COVER - INSTALLATION	9-31,9-99
CYLINDER HEAD COVER - LEFT - INSTALLATION	9-174
CYLINDER HEAD COVER - LEFT - REMOVAL	9-174
CYLINDER HEAD COVER - REMOVAL	9-31,9-99
CYLINDER HEAD COVER - RIGHT - INSTALLATION	9-175
CYLINDER HEAD COVER - RIGHT - REMOVAL	9-175
CYLINDER HEAD GASKET - DIAGNOSIS AND TESTING	9-167,9-24,9-92
CYLINDER HEAD OFF - INSTALLATION	9-102, 9-35
CYLINDER HEAD OFF - REMOVAL	9-102,9-34

Description	Group-Page
CYLINDER HEAD OIL GALLERY CUP PLUG SERVICE - STANDARD PROCEDURE	9-167
CYLINDER HEAD ON - INSTALLATION	9-102, 9-35
CYLINDER HEAD ON - REMOVAL	9-101,9-34
CYLINDER LOCK SWITCH - INSTALLATION, DOOR	8N-4
CYLINDER LOCK SWITCH - REMOVAL, DOOR	8N-3
DAMAGED OR WORN THREADS - STANDARD PROCEDURE, REPAIR OF	9-10, 9-151,9-79
DAMPER - INSTALLATION, VIBRATION	9-116, 9-199,9-50
DAMPER - INSTALLATION, WINDSHIELD HEADER	23-92
DAMPER - REMOVAL, VIBRATION	9-115,9-199, 9-49
DAMPER - REMOVAL, WINDSHIELD HEADER	23-92
DASH PANEL - INSTALLATION	23-77
DASH PANEL - REMOVAL	23-76
DATA BUS COMMUNICATION RECEIVE - PCM INPUT - OPERATION	8E-9
DAY / NIGHT MIRROR - DESCRIPTION, AUTOMATIC	8N-8
DAY / NIGHT MIRROR - OPERATION, AUTOMATIC	8N-8
DAY/NIGHT INSIDE MIRROR - DIAGNOSIS AND TESTING, AUTOMATIC	8N-8
DEAERATION - DIAGNOSIS AND TESTING, COOLING SYSTEM	7-23
DECK MOLDING - INSTALLATION, UPPER	23-91
DECK MOLDING - REMOVAL, UPPER	23-91
DECKLID - INSTALLATION	23-23
DECKLID - REMOVAL	23-23
DECKLID LATCH - INSTALLATION	23-25
DECKLID LATCH - REMOVAL	23-24
DECKLID LATCH STRIKER - INSTALLATION	23-25
DECKLID LATCH STRIKER - REMOVAL	23-25
DECKLID LOCK CYLINDER - INSTALLATION	23-25
DECKLID LOCK CYLINDER - REMOVAL	23-25
DECKLID OPENING WEATHERSTRIP - INSTALLATION	23-135
DECKLID OPENING WEATHERSTRIP - REMOVAL	23-135
DECKLID RELEASE SOLENOID - DIAGNOSIS AND TESTING	8N-5
DECKLID RELEASE SOLENOID - INSTALLATION	8N-5
DECKLID RELEASE SOLENOID - REMOVAL	8N-5
DECKLID RELEASE SWITCH - INSTALLATION	8N-5
DECKLID RELEASE SWITCH - REMOVAL	8N-5
DEFINITION - DESCRIPTION, TRIP	25-1
DEFLECTOR - INSTALLATION, WIND	23-132
DEFLECTOR - REMOVAL, WIND	23-132
DEFOGGER GRID LINE REPAIR - STANDARD PROCEDURE, REAR WINDOW	8G-4
DEFOGGER GRID LINES - DIAGNOSIS AND TESTING, REAR WINDOW	8G-4
DEFOGGER RELAY - DESCRIPTION, REAR WINDOW	8G-2
DEFOGGER RELAY - DIAGNOSIS AND TESTING, REAR WINDOW	8G-3
DEFOGGER RELAY - INSTALLATION, REAR WINDOW	8G-3
DEFOGGER RELAY - OPERATION, REAR WINDOW	8G-2
DEFOGGER RELAY - REMOVAL, REAR WINDOW	8G-3
DEFOGGER SWITCH - DESCRIPTION, REAR WINDOW	8G-3
DEFOGGER SWITCH - DIAGNOSIS AND TESTING, REAR WINDOW	8G-3
DEFOGGER SWITCH - OPERATION, REAR WINDOW	8G-3
DEPLOYMENT - STANDARD PROCEDURE, SERVICE AFTER AN AIRBAG	8O-3
DETECTION ASSY - DESCRIPTION, NATURAL VAC LEAK	25-15
DETECTION ASSY - INSTALLATION, NATURAL VAC LEAK	25-16
DETECTION ASSY - REMOVAL, NATURAL VAC LEAK	25-15
DETECTION PUMP - INSTALLATION, LEAK	25-17
DETECTION PUMP - REMOVAL, LEAK	25-16
DIAGNOSTIC SYSTEM - DIAGNOSIS AND TESTING, ON-BOARD	8F-19
DIAGNOSTIC TROUBLE CODES - STANDARD PROCEDURE, OBTAINING	8E-10
DIAGNOSTICS - DIAGNOSIS AND TESTING, SELF	24-5
DIAGRAMS - 41TE TRANSAXLE HYDRAULIC SCHEMATICS, SCHEMATICS	21-159
DIAGRAMS - DESCRIPTION, HOW TO USE WIRING	8W-01-1
DIAGRAMS - SPECIAL TOOLS, SCHEMATICS	21-173
DIFFERENTIAL - ASSEMBLY	21-22,21-77
DIFFERENTIAL - DESCRIPTION	21-73
DIFFERENTIAL - DISASSEMBLY	21-20,21-73
DIFFERENTIAL - OPERATION	21-73
DIFFERENTIAL BEARING CUPS - INSTALLATION	21-27
DIFFERENTIAL BEARING CUPS - REMOVAL	21-26
DIFFERENTIAL BEARING PRELOAD ADJUSTMENT / SHIM SELECTION, ADJUSTMENTS	21-25
DIFFERENTIAL BEARING PRELOAD MEASUREMENT AND ADJUSTMENT, ADJUSTMENTS	21-186
DIFFERENTIAL SIDE GEAR END PLAY - ADJUSTMENT	21-82
DIFFERENTIAL TURNING TORQUE - ADJUSTMENT	21-80
DIMENSION - JR-27 - SPECIFICATIONS, BODY OPENING	23-148
DIMENSIONS - JR-41 - SPECIFICATIONS, BODY OPENING	23-150
DIMENSIONS - SPECIFICATIONS, FRAME	13-5
DIODE - INSTALLATION	8W-01-14
DIODE - REMOVAL	8W-01-14
DISC BRAKE CALIPER - INSTALLATION, FRONT	5-18
DISC BRAKE CALIPER - INSTALLATION, REAR	5-22
DISC BRAKE CALIPER - REMOVAL, FRONT	5-15
DISC BRAKE CALIPER - REMOVAL, REAR	5-19
DISC BRAKE SHOES - CLEANING	5-11,5-8
DISC BRAKE SHOES - INSPECTION	5-11,5-8
DISC BRAKE SHOES - INSTALLATION, FRONT	5-8
DISC BRAKE SHOES - INSTALLATION, REAR	5-11
DISC BRAKE SHOES - REMOVAL, FRONT	5-6
DISC BRAKE SHOES - REMOVAL, REAR	5-9
DISC RUNOUT - DIAGNOSIS AND TESTING, CLUTCH COVER	6-5
DISCHARGE (ESD) SENSITIVE DEVICES - STANDARD PROCEDURE, ELECTROSTATIC	8W-01-8
DISCHARGE LINE - DESCRIPTION	24-47
DISCHARGE LINE - INSTALLATION	24-47
DISCHARGE LINE - REMOVAL	24-47
DISPLAY - INSTALLATION, VACUUM FLUORESCENT	8J-3
DISPLAY - REMOVAL, VACUUM FLUORESCENT	8J-3
DISPLAY TEST MODE, OPERATION - DRB III® STATE	25-10
DISTRIBUTION - DESCRIPTION, POWER	8W-97-1
DISTRIBUTION - OPERATION, POWER	8W-97-1
DISTRIBUTION CENTER - DESCRIPTION, POWER	8W-97-4
DISTRIBUTION CENTER - INSTALLATION, POWER	8W-97-5
DISTRIBUTION CENTER - OPERATION, POWER	8W-97-4
DISTRIBUTION CENTER - REMOVAL, POWER	8W-97-4
DOES NOT FILL - DIAGNOSIS AND TESTING, VEHICLE	25-19
DOHC - DESCRIPTION, ENGINE 2.0L	9-3
DOHC - DESCRIPTION, ENGINE 2.4L	9-73
DOHC - DESCRIPTION, ENGINE 2.7L	9-145
DOHC ENGINE, SPECIAL TOOLS - 2.0L	9-20
DOHC ENGINE, SPECIFICATIONS - 2.0L	9-17
DOME LAMP - INSTALLATION	8L-29
DOME LAMP - REMOVAL	8L-29
DOME LAMP BULB - INSTALLATION	8L-29
DOME LAMP BULB - REMOVAL	8L-29
DOOR - INSTALLATION	23-28,23-46
DOOR - INSTALLATION, FUEL FILL	23-55
DOOR - REMOVAL	23-28,23-46
DOOR - REMOVAL, FUEL FILL	23-55
DOOR ACTUATOR - DESCRIPTION, BLEND	24-24
DOOR ACTUATOR - DESCRIPTION, MODE	24-24
DOOR ACTUATOR - DESCRIPTION, RECIRCULATION	24-25
DOOR ACTUATOR - INSTALLATION, BLEND	24-24
DOOR ACTUATOR - INSTALLATION, MODE	24-25
DOOR ACTUATOR - INSTALLATION, RECIRCULATION	24-26
DOOR ACTUATOR - OPERATION, BLEND	24-24
DOOR ACTUATOR - OPERATION, MODE	24-24
DOOR ACTUATOR - OPERATION, RECIRCULATION	24-25
DOOR ACTUATOR - REMOVAL, BLEND	24-24
DOOR ACTUATOR - REMOVAL, MODE	24-25
DOOR ACTUATOR - REMOVAL, RECIRCULATION	24-26
DOOR BELT WEATHERSTRIP - INSTALLATION, OUTER	23-140
DOOR BELT WEATHERSTRIP - REMOVAL, OUTER	23-140
DOOR B-PILLAR DOOR SEAL - INSTALLATION, REAR	23-141
DOOR B-PILLAR DOOR SEAL - REMOVAL, REAR	23-141
DOOR COURTESY LAMP - JR27 ONLY - INSTALLATION	8L-30
DOOR COURTESY LAMP - JR27 ONLY - REMOVAL	8L-30
DOOR CYLINDER LOCK SWITCH - INSTALLATION	8N-4
DOOR CYLINDER LOCK SWITCH - REMOVAL	8N-3
DOOR GLASS - INSTALLATION	23-47
DOOR GLASS - REMOVAL	23-47
DOOR GLASS INNER BELT STABILIZER - INSTALLATION	23-34
DOOR GLASS INNER BELT STABILIZER - REMOVAL	23-34
DOOR GLASS RUN WEATHERSTRIP - INSTALLATION, FRONT	23-138
DOOR GLASS RUN WEATHERSTRIP - INSTALLATION, REAR	23-141
DOOR GLASS RUN WEATHERSTRIP - REMOVAL, FRONT	23-137
DOOR GLASS RUN WEATHERSTRIP - REMOVAL, REAR	23-141
DOOR INNER BELT WEATHERSTRIP - INSTALLATION	23-136
DOOR INNER BELT WEATHERSTRIP - INSTALLATION, FRONT	23-138
DOOR INNER BELT WEATHERSTRIP - INSTALLATION, REAR	23-142
DOOR INNER BELT WEATHERSTRIP - REMOVAL	23-136
DOOR INNER BELT WEATHERSTRIP - REMOVAL, FRONT	23-138
DOOR INNER BELT WEATHERSTRIP - REMOVAL, REAR	23-142
DOOR LOCK / UNLOCK SWITCH - DIAGNOSIS AND TESTING	8N-4
DOOR LOCK / UNLOCK SWITCH - INSTALLATION	8N-4
DOOR LOCK / UNLOCK SWITCH - REMOVAL	8N-4
DOOR LOCK MOTOR - DIAGNOSIS AND TESTING	8N-4
DOOR OPENING TRIM WELT - INSTALLATION	23-136
DOOR OPENING TRIM WELT - REMOVAL	23-136
DOOR OPENING WEATHERSTRIP - INSTALLATION, FRONT & REAR	23-137

Description	Group-Page
DOOR OPENING WEATHERSTRIP - REMOVAL, FRONT & REAR	23-137
DOOR OUTER BELT MOLDING - INSTALLATION, FRONT	23-138
DOOR OUTER BELT MOLDING - INSTALLATION, REAR	23-142
DOOR OUTER BELT MOLDING - REMOVAL, FRONT	23-138
DOOR OUTER BELT MOLDING - REMOVAL, REAR	23-142
DOOR PIN ASSEMBLY - INSTALLATION	23-43
DOOR PIN ASSEMBLY - REMOVAL	23-43
DOOR SEAL - INSTALLATION, REAR DOOR B-PILLAR	23-141
DOOR SEAL - REMOVAL, REAR DOOR B-PILLAR	23-141
DOOR SILL TRIM PANEL - INSTALLATION	23-82
DOOR SILL TRIM PANEL - REMOVAL	23-82
DOWEL PIN - ADJUSTMENTS	23-16
DOWNSTREAM 1/2, 2/2 2.7L - INSTALLATION	14-33
DOWNSTREAM 1/2, 2/2 2.7L - REMOVAL	14-33
DOWNSTREAM 1/2 4 CYLINDER - INSTALLATION	14-33
DOWNSTREAM 1/2 4 CYLINDER - REMOVAL	14-32
DRAIN AND FILL - STANDARD PROCEDURE, FLUID	21-27,21-83
DRAIN HOSE - INSTALLATION, SUNROOF HOUSING	23-129
DRAIN HOSE - REMOVAL, SUNROOF HOUSING	23-128
DRAINCOCK - INSTALLATION, RADIATOR	7-36
DRAINCOCK - REMOVAL, RADIATOR	7-36
DRAINING - COOLING SYSTEM	7-24
DRAW TEST - STANDARD PROCEDURE, IGNITION-OFF	8F-11
DRB III® STATE DISPLAY TEST MODE, OPERATION	25-10
DRIER - DESCRIPTION, RECEIVER	24-49
DRIER - INSTALLATION, RECEIVER	24-49
DRIER - OPERATION, RECEIVER	24-49
DRIER - REMOVAL, RECEIVER	24-49
DRIP RAIL WEATHERSTRIP - INSTALLATION	23-137
DRIP RAIL WEATHERSTRIP - REMOVAL	23-136
DRIVE - ASSEMBLY, FINAL	21-185
DRIVE - DESCRIPTION, FINAL	21-181
DRIVE - DISASSEMBLY, FINAL	21-182
DRIVE - OPERATION, FINAL	21-182
DRIVE BELT SPLASH SHIELD - INSTALLATION, ACCESSORY	23-52
DRIVE BELT SPLASH SHIELD - REMOVAL, ACCESSORY	23-52
DRIVE BELT TENSION - 2.7L - STANDARD PROCEDURE, CHECKING ACCESSORY	7-5
DRIVE BELT TENSION, SPECIFICATIONS - ACCESSORY	7-1
DRIVE BELTS - ADJUSTMENT, 2.7L ACCESSORY	7-8
DRIVE BELTS - DESCRIPTION	7-4
DRIVE BELTS - DIAGNOSIS AND TESTING, ACCESSORY	7-5
DRIVE MOTOR - INSTALLATION, SUNROOF	23-127
DRIVE MOTOR - REMOVAL, SUNROOF	23-126
DRIVE PLATE MISALIGNMENT - DIAGNOSIS AND TESTING	6-5
DRIVER AIRBAG - DESCRIPTION	8O-7
DRIVER AIRBAG - INSTALLATION	8O-7
DRIVER AIRBAG - OPERATION	8O-7
DRIVER AIRBAG - REMOVAL	8O-7
DRIVER AIRBAG TRIM COVER - INSTALLATION	8O-8
DRIVER AIRBAG TRIM COVER - REMOVAL	8O-7
DRIVER SEAT SWITCH - DESCRIPTION	8N-11
DRIVER SEAT SWITCH - DIAGNOSIS AND TESTING	8N-12
DRIVER SEAT SWITCH - INSTALLATION	8N-14
DRIVER SEAT SWITCH - OPERATION	8N-11
DRIVER SEAT SWITCH - REMOVAL	8N-14
DRIVING CLUTCHES - DESCRIPTION	21-181
DRIVING CLUTCHES - OPERATION	21-181
DROP - STANDARD PROCEDURE, TESTING FOR A VOLTAGE	8W-01-10
DROP RELAY - INSTALLATION, WINDOW	8N-18
DROP RELAY - REMOVAL, WINDOW	8N-18
DRUM - CLEANING, BRAKE PADS/SHOES - REAR	5-13
DRUM - DIAGNOSIS AND TESTING, BRAKE	5-23
DRUM - INSPECTION, BRAKE PADS/SHOES - REAR	5-13
DRUM - INSTALLATION	5-24
DRUM - INSTALLATION, BRAKE PADS/SHOES - REAR	5-13
DRUM - REMOVAL	5-23
DRUM - REMOVAL, BRAKE PADS/SHOES - REAR	5-12
DRUM BRAKE SHOES - ADJUSTMENT	5-14
DRUM MACHINING - STANDARD PROCEDURE, BRAKE	5-23
ELECTRIC FAN MOTOR TEST - DIAGNOSIS AND TESTING	7-40
ELECTRONIC VARIABLE BRAKE PROPORTIONING - DESCRIPTION	5-49
ELECTRONIC VARIABLE BRAKE PROPORTIONING - OPERATION	5-51
ELECTROSTATIC DISCHARGE (ESD) SENSITIVE DEVICES - STANDARD PROCEDURE	8W-01-8
ELEMENT - DESCRIPTION, HEATED SEAT	8G-6
ELEMENT - DIAGNOSIS AND TESTING, HEATED SEAT	8G-7
ELEMENT - INSTALLATION, AIR CLEANER	9-165,9-24,9-92
ELEMENT - INSTALLATION, HEATED SEAT	8G-7
ELEMENT - OPERATION, HEATED SEAT	8G-6
ELEMENT - REMOVAL, AIR CLEANER	9-164, 9-24,9-92
ELEMENT - REMOVAL, HEATED SEAT	8G-7
E-MARK LABEL - DESCRIPTION	Intro.-10
EMERGENCY RELEASE CABLE - INSTALLATION	23-26
EMERGENCY RELEASE CABLE - REMOVAL	23-26
EMISSION CONTROL INFORMATION LABEL - DESCRIPTION, VEHICLE	25-1
END COVER - INSTALLATION, INSTRUMENT PANEL	23-71
END COVER - REMOVAL, INSTRUMENT PANEL	23-71
END PLAY - ADJUSTMENT, DIFFERENTIAL SIDE GEAR	21-82
END PLAY - STANDARD PROCEDURE, CRANKSHAFT	9-187,9-37
END PLAY - STANDARD PROCEDURE, MEASURING CAMSHAFT	9-96
END PLAY - STANDARD PROCEDURE, MEASURING CRANKSHAFT	9-104
END-PLAY - STANDARD PROCEDURE, CAMSHAFT	9-29
ENGINE - OPERATION	7-11
ENGINE - STANDARD PROCEDURE, HYDROSTATIC LOCKED	9-10,9-151,9-79
ENGINE 2.0L DOHC - DESCRIPTION	9-3
ENGINE 2.4L DOHC - DESCRIPTION	9-73
ENGINE 2.7L DOHC - DESCRIPTION	9-145
ENGINE ASSEMBLY - INSTALLATION	9-155,9-16, 9-83
ENGINE ASSEMBLY - REMOVAL	9-13,9-153,9-82
ENGINE BLOCK - CLEANING	9-104,9-185,9-37
ENGINE BLOCK - DESCRIPTION	9-103,9-184, 9-36
ENGINE BLOCK - INSPECTION	9-104,9-185,9-37
ENGINE BLOCK HEATER TESTING - DIAGNOSIS AND TESTING	7-30
ENGINE COOLANT - DESCRIPTION	7-26
ENGINE COOLANT - DESCRIPTION	0-3
ENGINE COOLANT TEMPERATURE SENSOR - DESCRIPTION	7-31
ENGINE COOLANT TEMPERATURE SENSOR - INSTALLATION	7-32
ENGINE COOLANT TEMPERATURE SENSOR - OPERATION	7-31
ENGINE COOLANT TEMPERATURE SENSOR - REMOVAL	7-31
ENGINE COOLANT THERMOSTAT TESTING - DIAGNOSIS AND TESTING	7-32
ENGINE CORE AND OIL GALLERY PLUGS - STANDARD PROCEDURE	9-13,9-153,9-82
ENGINE DIAGNOSIS - INTRODUCTION - DIAGNOSIS AND TESTING	9-146,9-4,9-73
ENGINE DIAGNOSIS - MECHANICAL - DIAGNOSIS AND TESTING	9-148,9-7,9-76
ENGINE DIAGNOSIS - PERFORMANCE - DIAGNOSIS AND TESTING	9-146,9-5,9-74
ENGINE GASKET SURFACE PREPARATION - STANDARD PROCEDURE	9-12,9-153,9-81
ENGINE OIL AND FILTER CHANGE - STANDARD PROCEDURE	9-121,9-206,9-54
ENGINE OIL AND LUBRICANTS - DESCRIPTION	0-1
ENGINE OIL LEAK INSPECTION - DIAGNOSIS AND TESTING	9-150,9-78,9-9
ENGINE OIL LEVEL CHECK - STANDARD PROCEDURE	9-207
ENGINE OIL LEVEL CHECK, STANDARD PROCEDURE	9-121,9-54
ENGINE OIL PRESSURE - DIAGNOSIS AND TESTING, CHECKING	9-121,9-206,9-54
ENGINE, SPECIAL TOOLS - 2.0L DOHC	9-20
ENGINE, SPECIAL TOOLS - 2.4L	9-89
ENGINE, SPECIAL TOOLS - 2.7L	9-160
ENGINE, SPECIFICATIONS - 2.0L DOHC	9-17
ENGINE, SPECIFICATIONS - 2.4L	9-85
ENGINE, SPECIFICATIONS - 2.7L	9-156
ENGINE SPEED SENSOR - DESCRIPTION	14-24
ENGINE SPEED SENSOR - OPERATION	14-25
ENGINE SUPPORT ADJUSTMENT, ADJUSTMENTS	9-117,9-200,9-50
ENGINE TIMING, VERIFICATION	9-218
ENTRY - DESCRIPTION, ILLUMINATED	8L-30
ENTRY - DIAGNOSIS AND TESTING, ILLUMINATED	8L-30
ENTRY - DIAGNOSIS AND TESTING, REMOTE KEYLESS	8N-3
ENTRY MODULE - DIAGNOSIS AND TESTING, KEYLESS	8N-5
ENTRY MODULE - INSTALLATION, REMOTE KEYLESS	8N-6
ENTRY MODULE - REMOVAL, REMOTE KEYLESS	8N-6
EQUIPMENT - STANDARD PROCEDURE, REFRIGERANT	24-8
EQUIPPED MODELS - INSTALLATION, T350	6-13
EQUIPPED MODELS - INSTALLATION, T850	6-13
EQUIPPED MODELS - REMOVAL, T350	6-12
EQUIPPED MODELS - REMOVAL, T850	6-13
EVACUATING A/C SYSTEM - STANDARD PROCEDURE	24-10
EVAPORATION CONTROL SYSTEM - OPERATION	25-11
EVAPORATOR - DESCRIPTION, A/C	24-44
EVAPORATOR - INSTALLATION, A/C	24-46
EVAPORATOR - OPERATION, A/C	24-44
EVAPORATOR - REMOVAL, A/C	24-45
EVAPORATOR TEMPERATURE SENSOR - DESCRIPTION	24-19
EVAPORATOR TEMPERATURE SENSOR - INSTALLATION	24-20
EVAPORATOR TEMPERATURE SENSOR - OPERATION	24-20
EVAPORATOR TEMPERATURE SENSOR - REMOVAL	24-20
EVAP/PURGE SOLENOID - INSTALLATION	25-15
EVAP/PURGE SOLENOID - OPERATION	25-15
EVAP/PURGE SOLENOID - REMOVAL	25-15
EXCESSIVE EXHAUST SYSTEM NOISE - DIAGNOSIS AND TESTING	11-3
EXHAUST MANIFOLD - CLEANING	9-130,9-63
EXHAUST MANIFOLD - INSPECTION	9-130,9-216,9-63
EXHAUST MANIFOLD - INSTALLATION	9-130,9-216,9-64
EXHAUST MANIFOLD - REMOVAL	9-130,9-215,9-63
EXHAUST PIPE - CROSS-UNDER PIPE TO RESONATOR PIPE - 2.7L - INSTALLATION	11-12
EXHAUST PIPE - CROSS-UNDER PIPE TO RESONATOR PIPE - 2.7L - REMOVAL	11-12
EXHAUST SYSTEM - DESCRIPTION	11-1
EXHAUST SYSTEM - INSTALLATION	11-5
EXHAUST SYSTEM - REMOVAL	11-4

Description	Group-Page
EXHAUST SYSTEM NOISE - DIAGNOSIS AND TESTING, EXCESSIVE	11-3
EXHAUST SYSTEM RESTRICTION CHECK - DIAGNOSIS AND TESTING	11-4
EXHAUST SYSTEM, SPECIAL TOOLS	11-5
EXPANSION VALVE - DESCRIPTION, A/C	24-43
EXPANSION VALVE - DIAGNOSIS AND TESTING, A/C	24-43
EXPANSION VALVE - INSTALLATION, A/C	24-44
EXPANSION VALVE - OPERATION, A/C	24-43
EXPANSION VALVE - REMOVAL, A/C	24-44
EXPORT - DESCRIPTION	0-13
EXPORT - DESCRIPTION, SEAT BELT CONTROL TIMER MODULE - JR27	8O-12
EXPORT - DIAGNOSIS AND TESTING, HEADLAMP LEVELING MOTOR	8L-16
EXPORT - DIAGNOSIS AND TESTING, HEADLAMP LEVELING SWITCH	8L-16
EXPORT - DIAGNOSIS AND TESTING, POWER ANTENNA	8A-7
EXPORT - INSTALLATION, FRONT POSITION LAMP	8L-14
EXPORT - INSTALLATION, HEADLAMP	8L-15
EXPORT - INSTALLATION, HEADLAMP LEVELING MOTOR	8L-16
EXPORT - INSTALLATION, HEADLAMP UNIT	8L-20
EXPORT - INSTALLATION, POWER ANTENNA	8A-7
EXPORT - INSTALLATION, REAR FOG LAMP	8L-24
EXPORT - INSTALLATION, REAR FOG LAMP UNIT	8L-25
EXPORT - INSTALLATION, SEAT BELT CONTROL TIMER MODULE - JR27	8O-14
EXPORT - INSTALLATION, SIDE REPEATER LAMP UNIT	8L-25
EXPORT - OPERATION, SEAT BELT CONTROL TIMER MODULE - JR27	8O-12
EXPORT - REMOVAL, FRONT POSITION LAMP	8L-13
EXPORT - REMOVAL, HEADLAMP	8L-15
EXPORT - REMOVAL, HEADLAMP LEVELING MOTOR	8L-16
EXPORT - REMOVAL, HEADLAMP UNIT	8L-19
EXPORT - REMOVAL, POWER ANTENNA	8A-7
EXPORT - REMOVAL, REAR FOG LAMP	8L-24
EXPORT - REMOVAL, REAR FOG LAMP UNIT	8L-25
EXPORT - REMOVAL, SEAT BELT CONTROL TIMER MODULE - JR27	8O-14
EXPORT - REMOVAL, SIDE REPEATER LAMP UNIT	8L-25
EXPORT - STANDARD PROCEDURE, FOG LAMP UNIT ALIGNMENT	8L-12
EXPORT - STANDARD PROCEDURE, HEADLAMP UNIT ALIGNMENT	8L-18
EXPRESS MODULE - INSTALLATION, SUNROOF	23-133
EXPRESS MODULE - REMOVAL, SUNROOF	23-133
EXTERIOR - DESCRIPTION, LAMPS/ LIGHTING	8L-2
EXTERIOR - DIAGNOSIS AND TESTING, LAMPS/LIGHTING	8L-3
EXTERIOR - OPERATION, LAMPS/ LIGHTING	8L-3
EXTERIOR HANDLE - INSTALLATION	23-34, 23-47
EXTERIOR HANDLE - REMOVAL	23-34,23-47
EXTERIOR LAMPS LEFT ON - DIAGNOSIS AND TESTING	8B-3
EXTERIOR LAMPS, SPECIFICATIONS	8L-6
FAN CONTROL - DIAGNOSIS AND TESTING, RADIATOR	7-39
FAN MOTOR TEST - DIAGNOSIS AND TESTING, ELECTRIC	7-40
FAN(S) - DESCRIPTION, RADIATOR	7-39
FAN(S) - OPERATION, RADIATOR	7-39
FASTEN SEAT BELTS - DIAGNOSIS AND TESTING	8B-3
FASTENER IDENTIFICATION - DESCRIPTION	Intro.-2
FASTENER TORQUE, SPECIFICATIONS - ABS	5-54
FASTENER TORQUE, SPECIFICATIONS - BRAKE	5-4
FASTENER TORQUE, SPECIFICATIONS - COLUMN	19-17
FASTENER TORQUE, SPECIFICATIONS - FRONT SUSPENSION	2-4
FASTENER TORQUE, SPECIFICATIONS - POWER STEERING	19-8
FASTENER TORQUE, SPECIFICATIONS - REAR SUSPENSION	2-33
FASTENER USAGE - DESCRIPTION	Intro.-5
FEED CIRCUIT RESISTANCE TEST - DIAGNOSIS AND TESTING	8F-28
FEED CIRCUIT TEST - DIAGNOSIS AND TESTING	8F-29
FEED TROUGH - INSTALLATION, REAR BEARING OIL	21-38
FEED TROUGH - REMOVAL, REAR BEARING OIL	21-38
FENDER - INSTALLATION, FRONT	23-55
FENDER - REMOVAL, FRONT	23-54
FFV REPLACEMENT PARTS - DESCRIPTION	14-2
FILL - DIAGNOSIS AND TESTING, VEHICLE DOES NOT	25-19
FILL - STANDARD PROCEDURE, FLUID DRAIN	21-27,21-83
FILL DOOR - INSTALLATION, FUEL	23-55
FILL DOOR - REMOVAL, FUEL	23-55
FILL/CHECK LOCATIONS - DESCRIPTION, FLUID	0-6
FILLER CAP - DESCRIPTION, FUEL	25-15
FILLER CAP - OPERATION, FUEL	25-15
FILLER TUBE - INSTALLATION, FUEL TANK	14-12
FILLER TUBE - REMOVAL, FUEL TANK	14-11
FILLING - COOLING SYSTEM	7-24
FILTER - DESCRIPTION, OIL	9-123
FILTER - INSTALLATION, OIL	9-123,9-207,9-56
FILTER - REMOVAL, OIL	9-123,9-207,9-56
FILTER ADAPTER - INSTALLATION, OIL	9-56
FILTER ADAPTER - REMOVAL, OIL	9-56
FILTER CHANGE - STANDARD PROCEDURE, ENGINE OIL	9-121,9-206,9-54
FILTER SERVICE - STANDARD PROCEDURE, FLUID	21-190
FINAL DRIVE - ASSEMBLY	21-185
FINAL DRIVE - DESCRIPTION	21-181
FINAL DRIVE - DISASSEMBLY	21-182
FINAL DRIVE - OPERATION	21-182
FINESSE SANDING/BUFFING AND POLISHING - DESCRIPTION	23-94
FINISH - DESCRIPTION, BASECOAT/ CLEARCOAT	23-94
FITTING - CONNECTING ROD	9-113,9-47
FITTING - PISTON RING	9-114
FITTING - STANDARD PROCEDURE, CONNECTING ROD AND BEARING	9-186
FITTING - STANDARD PROCEDURE, CRANKSHAFT MAIN BEARING	9-190
FITTING - STANDARD PROCEDURE, PISTON RING	9-197
FITTING - STANDARD PROCEDURE, PISTON RING	9-47
FITTING - STANDARD PROCEDURE, PISTON TO CYLINDER BORE	9-111,9-44
FITTING PISTONS - STANDARD PROCEDURE	9-194
FITTINGS - STANDARD PROCEDURE, QUICK-CONNECT	14-12
FITTINGS - STANDARD PROCEDURE, TUBING	24-8
FLAG/DOOR GLASS CHANNEL - INSTALLATION, SIDE VIEW MIRROR	23-38
FLAG/DOOR GLASS CHANNEL - REMOVAL, SIDE VIEW MIRROR	23-38
FLASHER - DESCRIPTION, COMBINATION	8L-9
FLASHER - DIAGNOSIS AND TESTING, COMBINATION	8L-10
FLASHER - INSTALLATION, COMBINATION	8L-11
FLASHER - OPERATION, COMBINATION	8L-9
FLASHER - REMOVAL, COMBINATION	8L-11
FLEX PLATE - INSTALLATION	9-111
FLEX PLATE - REMOVAL	9-111
FLEXIBLE FUEL VEHICLES (2.7L ENGINES ONLY) - DESCRIPTION	0-3
FLOOR CONSOLE - INSTALLATION	23-83
FLOOR CONSOLE - REMOVAL	23-83
FLOW AND PRESSURE TEST - DIAGNOSIS AND TESTING, POWER STEERING	19-2
FLOW CHECK - DIAGNOSIS AND TESTING, COOLING SYSTEM	7-21
FLOW MANAGEMENT VALVE - DESCRIPTION	14-4
FLOW MANAGEMENT VALVE - OPERATION	14-4
FLUID - DESCRIPTION, AUTOMATIC/ MANUAL TRANSAXLE	0-4
FLUID AND FILTER SERVICE - STANDARD PROCEDURE	21-190
FLUID CAPACITIES, SPECIFICATIONS	0-6
FLUID CONTAMINATION - DIAGNOSIS AND TESTING, BRAKE	5-25
FLUID DRAIN AND FILL - STANDARD PROCEDURE	21-27,21-83
FLUID FILL/CHECK LOCATIONS - DESCRIPTION	0-6
FLUID LEAKAGE - DIAGNOSIS AND TESTING, TORQUE CONVERTER HOUSING	21-117
FLUID LEVEL AND CONDITION CHECK, STANDARD PROCEDURE	21-188
FLUID LEVEL CHECK - STANDARD PROCEDURE	21-82
FLUID LEVEL CHECKING - STANDARD PROCEDURE, BRAKE	5-25
FLUID LEVEL CHECKING - STANDARD PROCEDURE, POWER STEERING	19-34
FLUID LEVEL SWITCH - INSTALLATION, BRAKE	5-5
FLUID LEVEL SWITCH - REMOVAL, BRAKE	5-5
FLUID, SPECIFICATIONS - BRAKE	5-25
FLUORESCENT DISPLAY - INSTALLATION, VACUUM	8J-3
FLUORESCENT DISPLAY - REMOVAL, VACUUM	8J-3
FLUSH MEASUREMENTS - JR-27 - SPECIFICATIONS, BODY GAP	23-145
FOAM TAPE - INSTALLATION	23-54
FOAM TAPE - REMOVAL	23-54
FOG LAMP - EXPORT - INSTALLATION, REAR	8L-24
FOG LAMP - EXPORT - REMOVAL, REAR	8L-24
FOG LAMP - INSTALLATION	8L-11
FOG LAMP - REMOVAL	8L-11
FOG LAMP UNIT - EXPORT - INSTALLATION, REAR	8L-25
FOG LAMP UNIT - EXPORT - REMOVAL, REAR	8L-25
FOG LAMP UNIT ALIGNMENT - EXPORT - STANDARD PROCEDURE	8L-12
FOG LAMP UNIT ALIGNMENT - STANDARD PROCEDURE	8L-12
FOLDING BACK - INSTALLATION	23-114
FOLDING BACK - REMOVAL	23-114
FOLDING TOP COVER - INSTALLATION	23-18
FOLDING TOP COVER - REMOVAL	23-17
FORK AND SHAFT - DESCRIPTION, SHIFT	21-107
FORM-IN-PLACE GASKETS AND SEALERS - STANDARD PROCEDURE	9-11,9-152, 9-80
FORWARD INSTRUMENT PANEL CONSOLE - INSTALLATION	23-84
FORWARD INSTRUMENT PANEL CONSOLE - REMOVAL	23-84
FRAME CAM - ADJUSTMENT, TOP	23-15
FRAME DIMENSIONS - SPECIFICATIONS	13-5
FRONT - 2.7L - INSPECTION, CATALYTIC CONVERTER	11-8
FRONT - 2.7L - INSTALLATION, CATALYTIC CONVERTER	11-9
FRONT - 2.7L - REMOVAL, CATALYTIC CONVERTER	11-8
FRONT - INSTALLATION, CRANKSHAFT OIL SEAL	9-108,9-192,9-42
FRONT - INSTALLATION, WHEEL MOUNTING STUDS	22-13
FRONT & REAR DOOR OPENING WEATHERSTRIP - INSTALLATION	23-137
FRONT & REAR DOOR OPENING WEATHERSTRIP - REMOVAL	23-137
FRONT - REMOVAL, CRANKSHAFT OIL SEAL	9-108,9-191,9-41

Description	Group-Page
FRONT - REMOVAL, WHEEL MOUNTING STUDS	22-13
FRONT DISC BRAKE CALIPER - INSTALLATION	5-18
FRONT DISC BRAKE CALIPER - REMOVAL	5-15
FRONT DISC BRAKE SHOES - INSTALLATION	5-8
FRONT DISC BRAKE SHOES - REMOVAL	5-6
FRONT DOOR GLASS RUN WEATHERSTRIP - INSTALLATION	23-138
FRONT DOOR GLASS RUN WEATHERSTRIP - REMOVAL	23-137
FRONT DOOR INNER BELT WEATHERSTRIP - INSTALLATION	23-138
FRONT DOOR INNER BELT WEATHERSTRIP - REMOVAL	23-138
FRONT DOOR OUTER BELT MOLDING - INSTALLATION	23-138
FRONT DOOR OUTER BELT MOLDING - REMOVAL	23-138
FRONT FENDER - INSTALLATION	23-55
FRONT FENDER - REMOVAL	23-54
FRONT ISOLATOR BUSHING - ASSEMBLY	2-18
FRONT ISOLATOR BUSHING - DISASSEMBLY	2-17
FRONT MOUNT - INSTALLATION	9-119,9-202, 9-52
FRONT MOUNT - REMOVAL	9-119,9-202,9-52
FRONT OUTBOARD - INSTALLATION, SEAT BELT & RETRACTOR	8O-16
FRONT OUTBOARD - REMOVAL, SEAT BELT & RETRACTOR	8O-15
FRONT POSITION LAMP - EXPORT - INSTALLATION	8L-14
FRONT POSITION LAMP - EXPORT - REMOVAL	8L-13
FRONT ROTOR - INSTALLATION	5-36
FRONT ROTOR - REMOVAL	5-36
FRONT SEAT ADJUSTER - POWER - INSTALLATION	23-115
FRONT SEAT ADJUSTER - POWER - REMOVAL	23-115
FRONT SEAT BELT & RETRACTOR - JR27 ONLY - INSTALLATION	8O-9
FRONT SEAT BELT & RETRACTOR - JR27 ONLY - REMOVAL	8O-8
FRONT SEAT BELT BUCKLE - JR27 ONLY - INSTALLATION	8O-8
FRONT SEAT BELT BUCKLE - JR27 ONLY - REMOVAL	8O-8
FRONT SEAT CUSHION COVER - INSTALLATION	23-110
FRONT SEAT CUSHION COVER - REMOVAL	23-110
FRONT SUSPENSION - CAUTION	2-4
FRONT SUSPENSION - DESCRIPTION	2-3
FRONT SUSPENSION - OPERATION	2-4
FRONT SUSPENSION - WARNING	2-4
FRONT SUSPENSION CROSSMEMBER - INSTALLATION	13-9
FRONT SUSPENSION CROSSMEMBER - REMOVAL	13-9
FRONT SUSPENSION FASTENER TORQUE, SPECIFICATIONS	2-4
FRONT SUSPENSION, SPECIAL TOOLS	2-5
FRONT TOW HOOK - INSTALLATION	13-13
FRONT TOW HOOK - REMOVAL	13-13
FRONT WHEEL SPEED SENSOR - INSTALLATION	5-55
FRONT WHEEL SPEED SENSOR - REMOVAL	5-54
FRONT WHEELHOUSE SPLASH SHIELD - INSTALLATION, LEFT	23-57
FRONT WHEELHOUSE SPLASH SHIELD - INSTALLATION, RIGHT	23-58
FRONT WHEELHOUSE SPLASH SHIELD - REMOVAL, LEFT	23-57
FRONT WHEELHOUSE SPLASH SHIELD - REMOVAL, RIGHT	23-58
FUEL CORRECTION OR ADAPTIVE MEMORIES, OPERATION	14-18
FUEL DELIVERY SYSTEM - DIAGNOSIS AND TESTING	14-2
FUEL FILL DOOR - INSTALLATION	23-55
FUEL FILL DOOR - REMOVAL	23-55
FUEL FILLER CAP - DESCRIPTION	25-15
FUEL FILLER CAP - OPERATION	25-15
FUEL INJECTOR - DESCRIPTION	14-25
FUEL INJECTOR - OPERATION	14-25
FUEL LEVEL SENDING UNIT / SENSOR - DESCRIPTION	14-4
FUEL LEVEL SENDING UNIT / SENSOR - INSTALLATION	14-5
FUEL LEVEL SENDING UNIT / SENSOR - OPERATION	14-4
FUEL LEVEL SENDING UNIT / SENSOR - REMOVAL	14-5
FUEL PRESSURE GAUGE - STANDARD PROCEDURE	14-2
FUEL PRESSURE REGULATOR - INSTALLATION	14-6
FUEL PRESSURE REGULATOR - OPERATION	14-6
FUEL PRESSURE REGULATOR - REMOVAL	14-6
FUEL PUMP - DESCRIPTION	14-6
FUEL PUMP - OPERATION	14-7
FUEL PUMP MODULE - DESCRIPTION	14-7
FUEL PUMP MODULE - INSTALLATION	14-7
FUEL PUMP MODULE - OPERATION	14-7
FUEL PUMP MODULE - REMOVAL	14-7
FUEL PUMP RELAY - DESCRIPTION	14-27
FUEL PUMP RELAY - OPERATION	14-27
FUEL REQUIREMENTS - DESCRIPTION	0-5
FUEL, SPECIAL TOOLS	14-21,14-4
FUEL SYSTEM PRESSURE RELEASE PROCEDURE - STANDARD PROCEDURE	14-2
FUEL SYSTEM PRESSURE, SPECIFICATIONS	14-3
FUEL TANK - DESCRIPTION	14-10
FUEL TANK - INSTALLATION	14-11
FUEL TANK - OPERATION	14-10
FUEL TANK - REMOVAL	14-11
FUEL TANK FILLER TUBE - INSTALLATION	14-12
FUEL TANK FILLER TUBE - REMOVAL	14-11
FUEL TANK VENT TUBE - INSTALLATION	14-12
FUEL TANK VENT TUBE - REMOVAL	14-12
FUEL VEHICLES (2.7L ENGINES ONLY) - DESCRIPTION, FLEXIBLE	0-3
FUNCTIONS - DESCRIPTION, CIRCUIT	8W-01-6
FUSE - DESCRIPTION, IOD	8W-97-2
FUSE - INSTALLATION, IOD	8W-97-3
FUSE - OPERATION, IOD	8W-97-2
FUSE - REMOVAL, IOD	8W-97-3
FUSES POWERING SEVERAL LOADS - STANDARD PROCEDURE, TESTING FOR A SHORT TO GROUND ON	8W-01-10
GALLERY CUP PLUG SERVICE - STANDARD PROCEDURE, CYLINDER HEAD OIL	9-167
GALLERY PLUGS - STANDARD PROCEDURE, ENGINE CORE AND OIL	9-13, 9-153,9-82
GAP AND FLUSH MEASUREMENTS - JR-27 - SPECIFICATIONS, BODY	23-145
GAP, SPECIFICATIONS - WHEEL SPEED SENSOR AIR	5-54
GAS PROP - INSTALLATION	23-24
GAS PROP - REMOVAL	23-24
GASKET - DIAGNOSIS AND TESTING, CYLINDER HEAD	9-167,9-24,9-92
GASKET SURFACE PREPARATION - STANDARD PROCEDURE, ENGINE	9-12,9-153, 9-81
GASKETS AND SEALERS - STANDARD PROCEDURE, FORM-IN-PLACE	9-11,9-152,9-80
GAUGE - STANDARD PROCEDURE, FUEL PRESSURE	14-2
GEAR - ASSEMBLY	19-24
GEAR - DESCRIPTION	19-21
GEAR - DISASSEMBLY	19-24
GEAR - INSTALLATION	19-25
GEAR - OPERATION	19-21
GEAR - REMOVAL	19-22
GEAR END PLAY - ADJUSTMENT, DIFFERENTIAL SIDE	21-82
GEAR SHIFT CABLE - INSTALLATION	21-28, 21-84
GEAR SHIFT CABLE - REMOVAL	21-27,21-83
GEAR SHIFT MECHANISM - INSTALLATION	21-29,21-85
GEAR SHIFT MECHANISM - REMOVAL	21-29, 21-85
GEARSHIFT CABLE - INSTALLATION	21-193
GEARSHIFT CABLE - REMOVAL	21-191
GEARSHIFT LINKAGE ADJUSTMENT, ADJUSTMENTS	21-193
GEARSHIFT MECHANISM - INSTALLATION	21-196
GEARSHIFT MECHANISM - REMOVAL	21-194
GEARTRAIN - DESCRIPTION, PLANETARY	21-216
GEARTRAIN - OPERATION, PLANETARY	21-216
GENERAL - WARNINGS	8W-01-7
GENERAL DIAGNOSIS - DIAGNOSIS AND TESTING, 41TE TRANSAXLE	21-113
GENERATOR - DESCRIPTION	8F-20
GENERATOR - OPERATION	8F-20
GENERATOR, SPECIFICATIONS	8F-20
GLASS - INSTALLATION, DOOR	23-47
GLASS - INSTALLATION, SIDE VIEW MIRROR	23-59
GLASS - REMOVAL, DOOR	23-47
GLASS - REMOVAL, SIDE VIEW MIRROR	23-59
GLASS ADJUSTMENT, ADJUSTMENTS - QUARTER	23-96
GLASS CHANNEL - INSTALLATION, SIDE VIEW MIRROR FLAG/DOOR	23-38
GLASS CHANNEL - REMOVAL, SIDE VIEW MIRROR FLAG/DOOR	23-38
GLASS INNER BELT STABILIZER - INSTALLATION, DOOR	23-34
GLASS INNER BELT STABILIZER - REMOVAL, DOOR	23-34
GLASS JR-27 - INSTALLATION, ADJUSTABLE QUARTER	23-95
GLASS JR-27 - REMOVAL, ADJUSTABLE QUARTER	23-95
GLASS PANEL - INSTALLATION, SUNROOF	23-128
GLASS PANEL - REMOVAL, SUNROOF	23-128
GLASS PANEL SEAL - INSTALLATION, SUNROOF	23-128
GLASS PANEL SEAL - REMOVAL, SUNROOF	23-128
GLASS RUN WEATHERSTRIP - INSTALLATION, FRONT DOOR	23-138
GLASS RUN WEATHERSTRIP - INSTALLATION, REAR DOOR	23-141
GLASS RUN WEATHERSTRIP - REMOVAL, FRONT DOOR	23-137
GLASS RUN WEATHERSTRIP - REMOVAL, REAR DOOR	23-141
GLASS SYSTEM - DESCRIPTION, HEATED	8G-1
GLASS SYSTEM - DIAGNOSIS AND TESTING, HEATED	8G-2
GLASS SYSTEM - OPERATION, HEATED	8G-1
GLOVE BOX - INSTALLATION	23-67
GLOVE BOX - REMOVAL	23-66
GLOVE BOX LATCH - INSTALLATION	23-67
GLOVE BOX LATCH - REMOVAL	23-67
GRID LINE REPAIR - STANDARD PROCEDURE, REAR WINDOW DEFOGGER	8G-4
GRID LINES - DIAGNOSIS AND TESTING, REAR WINDOW DEFOGGER	8G-4
GROUND - OPERATION, PCM	8E-10
GROUND - STANDARD PROCEDURE, TESTING FOR A SHORT TO	8W-01-9
GROUND AND SPLICE INFORMATION - DESCRIPTION, CONNECTOR	8W-01-7
GUIDE PIN BUSHINGS (DISC/DISC BRAKES) - ASSEMBLY, CALIPER	5-17,5-21
GUIDE PIN BUSHINGS (DISC/DISC BRAKES) - DISASSEMBLY, CALIPER	5-16,5-20
HALF SHAFT - DESCRIPTION	3-1
HALF SHAFT - OPERATION	3-1
HALFSHAFT - SPECIFICATIONS	3-9
HALFSHAFT DIAGNOSIS, DIAGNOSIS AND TESTING	3-1
HALFSHAFT, SPECIAL TOOLS	3-9
HANDLE - INSTALLATION, EXTERIOR	23-34, 23-47
HANDLE - REMOVAL, EXTERIOR	23-34,23-47
HANDLING AIRBAGS - STANDARD PROCEDURE	8O-3
HARNESS - DIAGNOSIS AND TESTING, WIRING	8W-01-7
HAZARD WARNING SWITCH - DESCRIPTION	8L-14

Description	Group-Page
HAZARD WARNING SWITCH - OPERATION	8L-14
HCU (HYDRAULIC CONTROL UNIT) - DESCRIPTION	5-60
HEAD - CLEANING, CYLINDER	9-170,9-26,9-94
HEAD - DESCRIPTION, CYLINDER	9-166,9-24, 9-92
HEAD - INSPECTION, CYLINDER	9-170,9-26, 9-94
HEAD - INSTALLATION, CYLINDER	9-170,9-27, 9-95
HEAD - REMOVAL, CYLINDER	9-168,9-25,9-93
HEAD COVER - CLEANING, CYLINDER	9-31,9-99
HEAD COVER - INSPECTION, CYLINDER	9-31, 9-99
HEAD COVER - INSTALLATION, CYLINDER	9-31,9-99
HEAD COVER - LEFT - INSTALLATION, CYLINDER	9-174
HEAD COVER - LEFT - REMOVAL, CYLINDER	9-174
HEAD COVER - REMOVAL, CYLINDER	9-31,9-99
HEAD COVER - RIGHT - INSTALLATION, CYLINDER	9-175
HEAD COVER - RIGHT - REMOVAL, CYLINDER	9-175
HEAD GASKET - DIAGNOSIS AND TESTING, CYLINDER	9-167,9-24,9-92
HEADER / A-PILLAR WEATHERSTRIP - INSTALLATION	23-139
HEADER / A-PILLAR WEATHERSTRIP - REMOVAL	23-139
HEADER DAMPER - INSTALLATION, WINDSHIELD	23-92
HEADER DAMPER - REMOVAL, WINDSHIELD	23-92
HEADER WEATHERSTRIP RETAINER/ MOLING - INSTALLATION	23-140
HEADER WEATHERSTRIP RETAINER/ MOLING - REMOVAL	23-140
HEADLAMP - EXPORT - INSTALLATION	8L-15
HEADLAMP - EXPORT - REMOVAL	8L-15
HEADLAMP - INSTALLATION	8L-15
HEADLAMP - REMOVAL	8L-15
HEADLAMP LEVELING MOTOR - EXPORT - DIAGNOSIS AND TESTING	8L-16
HEADLAMP LEVELING MOTOR - EXPORT - INSTALLATION	8L-16
HEADLAMP LEVELING MOTOR - EXPORT - REMOVAL	8L-16
HEADLAMP LEVELING SWITCH - EXPORT - DIAGNOSIS AND TESTING	8L-16
HEADLAMP LEVELING SWITCH - INSTALLATION	8L-17
HEADLAMP LEVELING SWITCH - REMOVAL	8L-17
HEADLAMP UNIT - EXPORT - INSTALLATION	8L-20
HEADLAMP UNIT - EXPORT - REMOVAL	8L-19
HEADLAMP UNIT - INSTALLATION	8L-18
HEADLAMP UNIT - REMOVAL	8L-18
HEADLAMP UNIT ALIGNMENT - EXPORT - STANDARD PROCEDURE	8L-18
HEADLAMP UNIT ALIGNMENT - STANDARD PROCEDURE	8L-17
HEADLINER - INSTALLATION	23-85
HEADLINER - REMOVAL	23-84
HEADLINING - INSTALLATION, TOP	23-18
HEADLINING - REMOVAL, TOP	23-18
HEADREST - INSTALLATION	23-100
HEADREST - REMOVAL	23-100
HEAT SHIELDS - DESCRIPTION	11-14
HEAT SHIELDS - OPERATION	11-14
HEAT STAKING - STANDARD PROCEDURE	23-10
HEATED GLASS SYSTEM - DESCRIPTION	8G-1
HEATED GLASS SYSTEM - DIAGNOSIS AND TESTING	8G-2
HEATED GLASS SYSTEM - OPERATION	8G-1
HEATED SEAT ELEMENT - DESCRIPTION	8G-6
HEATED SEAT ELEMENT - DIAGNOSIS AND TESTING	8G-7
HEATED SEAT ELEMENT - INSTALLATION	8G-7
HEATED SEAT ELEMENT - OPERATION	8G-6
HEATED SEAT ELEMENT - REMOVAL	8G-7
HEATED SEAT MODULE - DESCRIPTION	8E-5
HEATED SEAT MODULE - DIAGNOSIS AND TESTING	8E-5
HEATED SEAT MODULE - INSTALLATION	8E-6
HEATED SEAT MODULE - OPERATION	8E-5
HEATED SEAT MODULE - REMOVAL	8E-6
HEATED SEAT SWITCH - DESCRIPTION	8G-8
HEATED SEAT SWITCH - DIAGNOSIS AND TESTING	8G-8
HEATED SEAT SWITCH - INSTALLATION	8G-9
HEATED SEAT SWITCH - OPERATION	8G-8
HEATED SEAT SWITCH - REMOVAL	8G-9
HEATED SEAT SYSTEM - DESCRIPTION	8G-5
HEATED SEAT SYSTEM - DIAGNOSIS AND TESTING	8G-6
HEATED SEAT SYSTEM - OPERATION	8G-5
HEATER BLANKET - DESCRIPTION, BATTERY	8F-16
HEATER BLANKET - DIAGNOSIS AND TESTING, BATTERY	8F-17
HEATER BLANKET - INSTALLATION, BATTERY	8F-17
HEATER BLANKET - OPERATION, BATTERY	8F-17
HEATER BLANKET - REMOVAL, BATTERY	8F-17
HEATER CONTROL - DIAGNOSIS AND TESTING, A/C	24-18
HEATER CONTROL - INSTALLATION, A/C	24-18
HEATER CONTROL - MTC - INSTALLATION, A/C	24-19
HEATER CONTROL - MTC - REMOVAL, A/C	24-18
HEATER CONTROL - REMOVAL, A/C	24-17
HEATER CORE - DESCRIPTION	24-50
HEATER CORE - INSTALLATION	24-51
HEATER CORE - OPERATION	24-50
HEATER CORE - REMOVAL	24-50
HEATER PERFORMANCE - DIAGNOSIS AND TESTING	24-2
HEATER TESTING - DIAGNOSIS AND TESTING, ENGINE BLOCK	7-30
HEATING & AIR CONDITIONING - WARNING	24-1
HEIGHT ADJUSTER - INSTALLATION, SEAT BELT	8O-14
HEIGHT ADJUSTER - REMOVAL, SEAT BELT	8O-14
HEIGHT MEASUREMENT - STANDARD PROCEDURE, CURB	2-57
HIGH AND LOW LIMITS - DESCRIPTION	25-9
HIGH MOUNTED STOP LAMP - INSTALLATION, CENTER	8L-8
HIGH MOUNTED STOP LAMP - REMOVAL, CENTER	8L-8
HIGH MOUNTED STOP LAMP UNIT - INSTALLATION, CENTER	8L-9
HIGH MOUNTED STOP LAMP UNIT - JR27 ONLY - INSTALLATION, CENTER	8L-9
HIGH MOUNTED STOP LAMP UNIT - JR27 ONLY - REMOVAL, CENTER	8L-9
HIGH MOUNTED STOP LAMP UNIT - REMOVAL, CENTER	8L-8
HIGH SPEED OPERATION - STANDARD PROCEDURE, TIRE PRESSURE	22-11
HINGE - INSTALLATION	23-24,23-35,23-48, 23-63
HINGE - REMOVAL	23-24,23-35,23-48,23-63
HOISTING - STANDARD PROCEDURE	0-17
HOLDDOWN - DESCRIPTION, BATTERY	8F-12
HOLDDOWN - INSTALLATION, BATTERY	8F-13
HOLDDOWN - OPERATION, BATTERY	8F-12
HOLDDOWN - REMOVAL, BATTERY	8F-12
HOLDING CLUTCHES - DESCRIPTION	21-197
HOLDING CLUTCHES - OPERATION	21-197
HOLE REPAIR - DESCRIPTION, THREADED	Intro.-5
HONING - STANDARD PROCEDURE, CYLINDER BORE	9-103,9-184,9-36
HOOD - INSTALLATION	23-63
HOOD - REMOVAL	23-63
HOOK - INSTALLATION, FRONT TOW	13-13
HOOK - REMOVAL, FRONT TOW	13-13
HORN - DIAGNOSIS AND TESTING	8H-3
HORN - INSTALLATION	8H-3
HORN - REMOVAL	8H-3
HORN RELAY - DESCRIPTION	8H-4
HORN RELAY - DIAGNOSIS AND TESTING	8H-4
HORN RELAY - OPERATION	8H-4
HORN SWITCH - DESCRIPTION	8H-4
HORN SYSTEM - DESCRIPTION	8H-1
HORN SYSTEM - DIAGNOSIS AND TESTING	8H-1
HORN SYSTEM - OPERATION	8H-1
HOSE - INSTALLATION, SUNROOF HOUSING DRAIN	23-129
HOSE - PRESSURE - INSTALLATION	19-35
HOSE - PRESSURE - REMOVAL	19-34
HOSE - REMOVAL, SUNROOF HOUSING DRAIN	23-128
HOSE - RETURN - INSTALLATION	19-37
HOSE - RETURN - REMOVAL	19-35
HOSE - SUPPLY - INSTALLATION	19-38
HOSE - SUPPLY - REMOVAL	19-37
HOSE CLAMPS - DESCRIPTION	7-34
HOSE CLAMPS - OPERATION	7-34
HOSES - DESCRIPTION, BRAKE TUBES	5-6
HOSES - DESCRIPTION, TRANSMISSION COOLER	7-46
HOSES - INSPECTION, BRAKE TUBES	5-6
HOSES - OPERATION, BRAKE TUBES	5-6
HOUSING - ASSEMBLY, HVAC	24-36
HOUSING - DESCRIPTION, HVAC	24-29
HOUSING - DISASSEMBLY, HVAC	24-30
HOUSING - INSTALLATION, AIR CLEANER	9-165,9-24,9-92
HOUSING - INSTALLATION, HVAC	24-40
HOUSING - OPERATION, HVAC	24-29
HOUSING - REMOVAL, AIR CLEANER	9-165,9-24, 9-92
HOUSING - REMOVAL, HVAC	24-29
HOUSING DRAIN HOSE - INSTALLATION, SUNROOF	23-129
HOUSING DRAIN HOSE - REMOVAL, SUNROOF	23-128
HOUSING FLUID LEAKAGE - DIAGNOSIS AND TESTING, TORQUE CONVERTER	21-117
HOW TO USE WIRING DIAGRAMS - DESCRIPTION	8W-01-1
HUB / BEARING - DESCRIPTION	2-34,2-6
HUB / BEARING - INSTALLATION	2-34,2-7
HUB / BEARING - OPERATION	2-34,2-6
HUB / BEARING - REMOVAL	2-34,2-6
HUB AND BEARING - DIAGNOSIS AND TESTING	2-34,2-6
HVAC HOUSING - ASSEMBLY	24-36
HVAC HOUSING - DESCRIPTION	24-29
HVAC HOUSING - DISASSEMBLY	24-30
HVAC HOUSING - INSTALLATION	24-40
HVAC HOUSING - OPERATION	24-29
HVAC HOUSING - REMOVAL	24-29
HYDRAULIC CIRCUIT - STANDARD PROCEDURE, BLEEDING CLUTCH	6-6
HYDRAULIC CIRCUITS AND VALVES - OPERATION	5-60
HYDRAULIC CYLINDER - INSTALLATION	23-19
HYDRAULIC CYLINDER - REMOVAL	23-19
HYDRAULIC LASH ADJUSTER NOISE DIAGNOSIS - DIAGNOSIS AND TESTING	9-181
HYDRAULIC LASH ADJUSTER NOISE DIAGNOSIS, DIAGNOSIS AND TESTING	9-32, 9-99
HYDRAULIC LASH ADJUSTERS - INSTALLATION	9-182
HYDRAULIC LASH ADJUSTERS - REMOVAL	9-182
HYDRAULIC LINES - INSTALLATION	23-19
HYDRAULIC LINES - REMOVAL	23-19
HYDRAULIC MOTOR/PUMP ASSEMBLY - INSTALLATION	23-20
HYDRAULIC MOTOR/PUMP ASSEMBLY - REMOVAL	23-20
HYDRAULIC MOTOR/PUMP BLEEDING PROCEDURES - ADJUSTMENT	23-14
HYDRAULIC PRESSURE TESTS - DIAGNOSIS AND TESTING	21-114
HYDRAULIC SCHEMATICS, SCHEMATICS AND DIAGRAMS - 41TE TRANSAXLE	21-159
HYDRAULIC SYSTEMS - DIAGNOSIS AND TESTING	23-13
HYDROSTATIC LOCKED ENGINE - STANDARD PROCEDURE	9-10,9-151,9-79
ICU - ASSEMBLY	5-68
ICU - DISASSEMBLY	5-67
ICU - INSTALLATION	5-68
ICU - REMOVAL	5-66
ICU (INTEGRATED CONTROL UNIT) - DESCRIPTION	5-66

Description	Group-Page
ICU (INTEGRATED CONTROL UNIT) - OPERATION	5-66
IDENTIFICATION - DESCRIPTION, FASTENER	Intro.-2
IDENTIFICATION - DESCRIPTION, VEHICLE	23-1
IDENTIFICATION AND INFORMATION - DESCRIPTION, SECTION	8W-01-6
IDENTIFICATION NUMBER - DESCRIPTION, VEHICLE	Intro.-9
IDLE AIR CONTROL MOTOR - DESCRIPTION	14-27
IDLE AIR CONTROL MOTOR - OPERATION	14-27
IGNITION COIL - DESCRIPTION	8I-4
IGNITION COIL - OPERATION	8I-4
IGNITION COIL CAPACITOR - DESCRIPTION	8I-6
IGNITION COIL CAPACITOR - INSTALLATION	8I-6
IGNITION COIL CAPACITOR - REMOVAL	8I-6
IGNITION SENSE - PCM INPUT - OPERATION	8E-9
IGNITION SWITCH - DIAGNOSIS AND TESTING, KEY LEFT IN	8B-3
IGNITION SYSTEM - DESCRIPTION	8I-1
IGNITION SYSTEM - OPERATION	8I-1
IGNITION-OFF DRAW TEST - STANDARD PROCEDURE	8F-11
ILLUMINATED ENTRY - DESCRIPTION	8L-30
ILLUMINATED ENTRY - DIAGNOSIS AND TESTING	8L-30
ILLUMINATION - INSTALLATION, TRANSMISSION RANGE INDICATOR	8L-31
ILLUMINATION - REMOVAL, TRANSMISSION RANGE INDICATOR	8L-31
ILLUMINATION AND WARNING LAMPS - INSTALLATION, CLUSTER	8L-28
ILLUMINATION AND WARNING LAMPS - REMOVAL, CLUSTER	8L-28
ILLUMINATION LAMP - INSTALLATION, COMPAPSS MINI TRIP COMPUTER/ TRAVELER	8L-29
ILLUMINATION LAMP - REMOVAL, COMPAPSS MINI TRIP COMPUTER/ TRAVELER	8L-29
IMMOBILIZER MODULE - DESCRIPTION, SENTRY KEY	8E-13
IMMOBILIZER MODULE - INSTALLATION, SENTRY KEY	8E-14
IMMOBILIZER MODULE - OPERATION, SENTRY KEY	8E-14
IMMOBILIZER MODULE - REMOVAL, SENTRY KEY	8E-14
IMMOBILIZER SYSTEM - DIAGNOSIS AND TESTING, SENTRY KEY	8Q-2
INBOARD - INSTALLATION, SEAT BELT - REAR	8O-15
INBOARD - REMOVAL, SEAT BELT - REAR	8O-15
INBOARD BEZEL - INSTALLATION, INSTRUMENT PANEL	23-72
INBOARD BEZEL - REMOVAL, INSTRUMENT PANEL	23-72
IN-CAR SENSOR ASPIRATOR MOTOR - DIAGNOSIS AND TESTING	24-21
IN-CAR TEMPERATURE SENSOR - DESCRIPTION	24-21
IN-CAR TEMPERATURE SENSOR - OPERATION	24-21
IN-CAR TEMPERATURE SENSOR - REMOVAL	24-22
INDICATOR ILLUMINATION - INSTALLATION, TRANSMISSION RANGE	8L-31
INDICATOR ILLUMINATION - REMOVAL, TRANSMISSION RANGE	8L-31
INDICATOR LAMP - DESCRIPTION, VTSS/SKIS	8Q-5
INDICATOR LAMP - OPERATION, VTSS/SKIS	8Q-5
INDICATORS - DIAGNOSIS AND TESTING, TREAD WEAR	22-10
INFLATION PRESSURES - STANDARD PROCEDURE, TIRE	22-10
INITIAL OPERATION - STANDARD PROCEDURE, POWER STEERING PUMP	19-30
INJECTION SYSTEM - OPERATION	14-16
INJECTOR - DESCRIPTION, FUEL	14-25
INJECTOR - OPERATION, FUEL	14-25
INLET AIR TEMPERATURE SENSOR - DESCRIPTION	14-28
INLET AIR TEMPERATURE SENSOR - OPERATION	14-28
INNER - INSTALLATION, CV BOOT	3-10
INNER - REMOVAL, CV BOOT	3-9
INNER BELT STABILIZER - INSTALLATION, DOOR GLASS	23-34
INNER BELT STABILIZER - REMOVAL, DOOR GLASS	23-34
INNER BELT WEATHERSTRIP - INSTALLATION, DOOR	23-136
INNER BELT WEATHERSTRIP - INSTALLATION, FRONT DOOR	23-138
INNER BELT WEATHERSTRIP - INSTALLATION, REAR DOOR	23-142
INNER BELT WEATHERSTRIP - REMOVAL, DOOR	23-136
INNER BELT WEATHERSTRIP - REMOVAL, FRONT DOOR	23-138
INNER BELT WEATHERSTRIP - REMOVAL, REAR DOOR	23-142
INPUT - DESCRIPTION, SPEED SENSOR	21-226
INPUT - INSTALLATION, SPEED SENSOR	21-228
INPUT - OPERATION, DATA BUS COMMUNICATION RECEIVE - PCM	8E-9
INPUT - OPERATION, IGNITION SENSE - PCM	8E-9
INPUT - OPERATION, SENSOR RETURN - PCM	8E-9
INPUT - OPERATION, SPEED SENSOR	21-227
INPUT - REMOVAL, SPEED SENSOR	21-227
INPUT BEARING AND SLEEVE - INSTALLATION	21-30
INPUT BEARING AND SLEEVE - REMOVAL	21-30
INPUT CLUTCH ASSEMBLY - ASSEMBLY	21-204
INPUT CLUTCH ASSEMBLY - DISASSEMBLY	21-197
INPUT SHAFT - ASSEMBLY	21-34,21-89
INPUT SHAFT - DESCRIPTION	21-86
INPUT SHAFT - DISASSEMBLY	21-31,21-86
INSIDE MIRROR - DIAGNOSIS AND TESTING, AUTOMATIC DAY/NIGHT	8N-8
INSPECT, INSPECTION	21-108,21-40
INSTRUMENT CLUSTER - DESCRIPTION	8J-1
INSTRUMENT CLUSTER - DIAGNOSIS AND TESTING	8J-1
INSTRUMENT CLUSTER - INSTALLATION	8J-2
INSTRUMENT CLUSTER - OPERATION	8J-1
INSTRUMENT CLUSTER - REMOVAL	8J-2
INSTRUMENT CLUSTER MASK/LENS - INSTALLATION	8J-2
INSTRUMENT CLUSTER MASK/LENS - REMOVAL	8J-2
INSTRUMENT PANEL A/C OUTLETS - INSTALLATION	24-40
INSTRUMENT PANEL A/C OUTLETS - REMOVAL	24-40
INSTRUMENT PANEL ASSEMBLY - INSTALLATION	23-68
INSTRUMENT PANEL ASSEMBLY - REMOVAL	23-67
INSTRUMENT PANEL CENTER BEZEL - INSTALLATION	23-70
INSTRUMENT PANEL CENTER BEZEL - REMOVAL	23-70
INSTRUMENT PANEL CLUSTER BEZEL - INSTALLATION	23-70
INSTRUMENT PANEL CLUSTER BEZEL - REMOVAL	23-70
INSTRUMENT PANEL CONSOLE - INSTALLATION, FORWARD	23-84
INSTRUMENT PANEL CONSOLE - REMOVAL, FORWARD	23-84
INSTRUMENT PANEL END COVER - INSTALLATION	23-71
INSTRUMENT PANEL END COVER - REMOVAL	23-71
INSTRUMENT PANEL INBOARD BEZEL - INSTALLATION	23-72
INSTRUMENT PANEL INBOARD BEZEL - REMOVAL	23-72
INSTRUMENT PANEL OUTBOARD BEZEL - INSTALLATION	23-72
INSTRUMENT PANEL OUTBOARD BEZEL - REMOVAL	23-72
INSTRUMENT PANEL TOP COVER - INSTALLATION	23-73
INSTRUMENT PANEL TOP COVER - REMOVAL	23-73
INSTRUMENT PANEL TRIM - INSTALLATION, LEFT LOWER	23-73
INSTRUMENT PANEL TRIM - INSTALLATION, RIGHT LOWER	23-75
INSTRUMENT PANEL TRIM - REMOVAL, LEFT LOWER	23-73
INSTRUMENT PANEL TRIM - REMOVAL, RIGHT LOWER	23-75
INSTRUMENT PANEL TRIM BEZEL - INSTALLATION, RIGHT	23-75
INSTRUMENT PANEL TRIM BEZEL - REMOVAL, RIGHT	23-75
INSTRUMENT SILENCER PANEL - INSTALLATION, LEFT LOWER	23-74
INSTRUMENT SILENCER PANEL - REMOVAL, LEFT LOWER	23-74
INTAKE MANIFOLD - CLEANING	9-129,9-62
INTAKE MANIFOLD - INSPECTION	9-129,9-62
INTAKE MANIFOLD - INSTALLATION	9-129,9-62
INTAKE MANIFOLD - REMOVAL	9-128,9-62
INTAKE MANIFOLD LEAKS - DIAGNOSIS AND TESTING	9-128,9-213,9-62
INTAKE MANIFOLD LOWER - INSPECTION	9-214
INTAKE MANIFOLD LOWER - INSTALLATION	9-215
INTAKE MANIFOLD LOWER - REMOVAL	9-214
INTAKE MANIFOLD UPPER - INSPECTION	9-214
INTAKE MANIFOLD UPPER - INSTALLATION	9-214
INTAKE MANIFOLD UPPER - REMOVAL	9-213
INTAKE MANIFOLD VACUUM PORT REPAIR - STANDARD PROCEDURE	9-213
INTAKE/EXHAUST VALVES & SEATS - CLEANING	9-100,9-33
INTAKE/EXHAUST VALVES & SEATS - DESCRIPTION	9-100,9-175,9-33
INTAKE/EXHAUST VALVES & SEATS - INSPECTION	9-177
INTAKE/EXHAUST VALVES & SEATS - INSTALLATION	9-177
INTAKE/EXHAUST VALVES & SEATS - OPERATION	9-100,9-33
INTAKE/EXHAUST VALVES & SEATS - REMOVAL	9-177
INTERACTIVE SPEED CONTROL, DESCRIPTION	8P-1
INTERFACE (PCI) BUS, OPERATION - PROGRAMMABLE COMMUNICATIONS	14-19
INTERIOR LAMPS, SPECIFICATIONS	8L-27
INTERLOCK CABLE - DESCRIPTION, SHIFT	21-217
INTERLOCK CABLE - INSTALLATION, SHIFT	21-220
INTERLOCK CABLE - OPERATION, SHIFT	21-217
INTERLOCK CABLE - REMOVAL, SHIFT	21-218
INTERLOCK CABLE VERIFICATION AND ADJUSTMENT, ADJUSTMENTS - BRAKE/TRANSMISSION SHIFT	21-221
INTERLOCK MECHANISM - INSTALLATION, SHIFT	21-223
INTERLOCK MECHANISM - REMOVAL, SHIFT	21-223
INTERLOCK SWITCH - DIAGNOSIS AND TESTING, CLUTCH PEDAL	6-10
INTERLOCK SWITCH - INSTALLATION, CLUTCH PEDAL	6-11
INTERLOCK SWITCH - REMOVAL, CLUTCH PEDAL	6-11
INTERMEDIATE SHAFT - ASSEMBLY	21-100
INTERMEDIATE SHAFT - DESCRIPTION	19-17
INTERMEDIATE SHAFT - DESCRIPTION	21-93
INTERMEDIATE SHAFT - DIAGNOSIS AND TESTING, STEERING COLUMN	19-17
INTERMEDIATE SHAFT - DISASSEMBLY	21-94
INTERMEDIATE SHAFT - INSTALLATION	19-18
INTERMEDIATE SHAFT - OPERATION	19-17
INTERMEDIATE SHAFT - REMOVAL	19-17
INTERNATIONAL SYMBOLS - DESCRIPTION	Intro.-5
INTERNATIONAL SYMBOLS - DESCRIPTION	0-1

Description	Group-Page
INTRODUCTION - DIAGNOSIS AND TESTING, ENGINE DIAGNOSIS	9-146,9-4,9-73
IOD FUSE - DESCRIPTION	8W-97-2
IOD FUSE - INSTALLATION	8W-97-3
IOD FUSE - OPERATION	8W-97-2
IOD FUSE - REMOVAL	8W-97-3
ISOLATOR BUSHING - ASSEMBLY, FRONT	2-18
ISOLATOR BUSHING - ASSEMBLY, REAR	2-18
ISOLATOR BUSHING - DISASSEMBLY, FRONT	2-17
ISOLATOR BUSHING - DISASSEMBLY, REAR	2-17
JOINT - ASSEMBLY, UPPER BALL	2-50
JOINT - DESCRIPTION, LOWER BALL	2-11
JOINT - DESCRIPTION, UPPER BALL	2-30,2-47
JOINT - DIAGNOSIS AND TESTING, LOWER BALL	2-11
JOINT - DIAGNOSIS AND TESTING, UPPER BALL	2-30,2-47
JOINT - DISASSEMBLY, UPPER BALL	2-50
JOINT SEAL BOOT - INSTALLATION, LOWER BALL	2-12
JOINT SEAL BOOT - REMOVAL, LOWER BALL	2-11
JUMP STARTING - STANDARD PROCEDURE	0-17
JUNCTION BLOCK - DESCRIPTION	8W-97-3
JUNCTION BLOCK - DESCRIPTION	5-26
JUNCTION BLOCK - INSTALLATION	8W-97-4
JUNCTION BLOCK - INSTALLATION	5-26
JUNCTION BLOCK - OPERATION	8W-97-3
JUNCTION BLOCK - OPERATION	5-26
JUNCTION BLOCK - REMOVAL	8W-97-3
JUNCTION BLOCK - REMOVAL	5-26
KEY - DESCRIPTION, TRANSPONDER	8Q-3
KEY - OPERATION, TRANSPONDER	8Q-3
KEY IMMOBILIZER MODULE - DESCRIPTION, SENTRY	8E-13
KEY IMMOBILIZER MODULE - INSTALLATION, SENTRY	8E-14
KEY IMMOBILIZER MODULE - OPERATION, SENTRY	8E-14
KEY IMMOBILIZER MODULE - REMOVAL, SENTRY	8E-14
KEY IMMOBILIZER SYSTEM - DIAGNOSIS AND TESTING, SENTRY	8Q-2
KEY LEFT IN IGNITION SWITCH - DIAGNOSIS AND TESTING	8B-3
KEYLESS ENTRY - DIAGNOSIS AND TESTING, REMOTE	8N-3
KEYLESS ENTRY MODULE - DIAGNOSIS AND TESTING	8N-5
KEYLESS ENTRY MODULE - INSTALLATION, REMOTE	8N-6
KEYLESS ENTRY MODULE - REMOVAL, REMOTE	8N-6
KICK SHIELD - INSTALLATION	23-76
KICK SHIELD - REMOVAL	23-76
KNOCK SENSOR - DESCRIPTION	8I-6
KNOCK SENSOR - OPERATION	8I-6
KNUCKLE - DESCRIPTION	2-34,2-8
KNUCKLE - DIAGNOSIS AND TESTING	2-34
KNUCKLE - DIAGNOSIS AND TESTING, STEERING	2-8
KNUCKLE - INSTALLATION	2-10,2-37
KNUCKLE - OPERATION	2-34,2-8
KNUCKLE - REMOVAL	2-34,2-8
LABEL - DESCRIPTION, E-MARK	Intro.-10
LABEL - DESCRIPTION, VECI	Intro.-11
LABEL - DESCRIPTION, VEHICLE EMISSION CONTROL INFORMATION	25-1
LABEL - DESCRIPTION, VEHICLE SAFETY CERTIFICATION	Intro.-10
LACE - INSTALLATION, OPENING TRIM	23-130
LACE - REMOVAL, OPENING TRIM	23-130
LAMP - DESCRIPTION, VTSS/SKIS INDICATOR	8Q-5
LAMP - EXPORT - INSTALLATION, FRONT POSITION	8L-14
LAMP - EXPORT - INSTALLATION, REAR FOG	8L-24
LAMP - EXPORT - REMOVAL, FRONT POSITION	8L-13
LAMP - EXPORT - REMOVAL, REAR FOG	8L-24
LAMP - INSTALLATION, CENTER HIGH MOUNTED STOP	8L-8
LAMP - INSTALLATION, COMPAPSS MINI TRIP COMPUTER/TRAVELER ILLUMINATION	8L-29
LAMP - INSTALLATION, DOME	8L-29
LAMP - INSTALLATION, FOG	8L-11
LAMP - INSTALLATION, LICENSE PLATE	8L-20
LAMP - INSTALLATION, PARK/TURN SIGNAL	8L-24
LAMP - INSTALLATION, READING	8L-30
LAMP - INSTALLATION, TAIL	8L-26
LAMP - INSTALLATION, VANITY	8L-31
LAMP - JR27 ONLY - INSTALLATION, CONSOLE COURTESY	8L-29
LAMP - JR27 ONLY - INSTALLATION, DOOR COURTESY	8L-30
LAMP - JR27 ONLY - REMOVAL, CONSOLE COURTESY	8L-29
LAMP - JR27 ONLY - REMOVAL, DOOR COURTESY	8L-30
LAMP - OPERATION, VTSS/SKIS INDICATOR	8Q-5
LAMP - REMOVAL, CENTER HIGH MOUNTED STOP	8L-8
LAMP - REMOVAL, COMPAPSS MINI TRIP COMPUTER/TRAVELER ILLUMINATION	8L-29
LAMP - REMOVAL, DOME	8L-29
LAMP - REMOVAL, FOG	8L-11
LAMP - REMOVAL, LICENSE PLATE	8L-20
LAMP - REMOVAL, PARK/TURN SIGNAL	8L-24
LAMP - REMOVAL, READING	8L-30
LAMP - REMOVAL, TAIL	8L-26
LAMP - REMOVAL, VANITY	8L-31
LAMP BULB - INSTALLATION, DOME	8L-29
LAMP BULB - REMOVAL, DOME	8L-29
LAMP SWITCH - ADJUSTMENT, BRAKE	8L-8
LAMP SWITCH - DESCRIPTION, BRAKE	8L-6
LAMP SWITCH - DIAGNOSIS AND TESTING, BRAKE	8L-6
LAMP SWITCH - INSTALLATION, BACK-UP	21-20,21-72
LAMP SWITCH - INSTALLATION, BRAKE	8L-7
LAMP SWITCH - OPERATION, BRAKE	8L-6
LAMP SWITCH - REMOVAL, BACK-UP	21-20, 21-72
LAMP SWITCH - REMOVAL, BRAKE	8L-7
LAMP UNIT - EXPORT - INSTALLATION, REAR FOG	8L-25
LAMP UNIT - EXPORT - INSTALLATION, SIDE REPEATER	8L-25
LAMP UNIT - EXPORT - REMOVAL, REAR FOG	8L-25
LAMP UNIT - EXPORT - REMOVAL, SIDE REPEATER	8L-25
LAMP UNIT - INSTALLATION, CENTER HIGH MOUNTED STOP	8L-9
LAMP UNIT - INSTALLATION, LICENSE PLATE	8L-21
LAMP UNIT - INSTALLATION, TAIL	8L-26
LAMP UNIT - INSTALLATION, TRUNK	8L-26
LAMP UNIT - JR27 ONLY - INSTALLATION, CENTER HIGH MOUNTED STOP	8L-9
LAMP UNIT - JR27 ONLY - INSTALLATION, LICENSE PLATE	8L-21
LAMP UNIT - JR27 ONLY - REMOVAL, CENTER HIGH MOUNTED STOP	8L-9
LAMP UNIT - JR27 ONLY - REMOVAL, LICENSE PLATE	8L-21
LAMP UNIT - REMOVAL, CENTER HIGH MOUNTED STOP	8L-8
LAMP UNIT - REMOVAL, LICENSE PLATE	8L-21
LAMP UNIT - REMOVAL, TAIL	8L-26
LAMP UNIT - REMOVAL, TRUNK	8L-26
LAMP UNIT ALIGNMENT - EXPORT - STANDARD PROCEDURE, FOG	8L-12
LAMP UNIT ALIGNMENT - STANDARD PROCEDURE, FOG	8L-12
LAMPS - INSTALLATION, CLUSTER ILLUMINATION AND WARNING	8L-28
LAMPS - REMOVAL, CLUSTER ILLUMINATION AND WARNING	8L-28
LAMPS LEFT ON - DIAGNOSIS AND TESTING, EXTERIOR	8B-3
LAMPS, SPECIFICATIONS - EXTERIOR	8L-6
LAMPS, SPECIFICATIONS - INTERIOR	8L-27
LAMPS/LIGHTING - EXTERIOR - DESCRIPTION	8L-2
LAMPS/LIGHTING - EXTERIOR - DIAGNOSIS AND TESTING	8L-3
LAMPS/LIGHTING - EXTERIOR - OPERATION	8L-3
LASH ADJUSTER NOISE DIAGNOSIS - DIAGNOSIS AND TESTING, HYDRAULIC	9-181
LASH ADJUSTER NOISE DIAGNOSIS, DIAGNOSIS AND TESTING - HYDRAULIC	9-32,9-99
LASH ADJUSTERS - INSTALLATION, HYDRAULIC	9-182
LASH ADJUSTERS - REMOVAL, HYDRAULIC	9-182
LATCH - INSTALLATION	23-35,23-48,23-64
LATCH - INSTALLATION, DECKLID	23-25
LATCH - INSTALLATION, GLOVE BOX	23-67
LATCH - REMOVAL	23-35,23-48,23-63
LATCH - REMOVAL, DECKLID	23-24
LATCH - REMOVAL, GLOVE BOX	23-67
LATCH RELEASE CABLE - INSTALLATION	23-64
LATCH RELEASE CABLE - REMOVAL	23-64
LATCH STRIKER - INSTALLATION	23-37,23-49
LATCH STRIKER - INSTALLATION, DECKLID	23-25
LATCH STRIKER - INSTALLATION, SEAT BACK	23-116
LATCH STRIKER - REMOVAL	23-37,23-49
LATCH STRIKER - REMOVAL, DECKLID	23-25
LATCH STRIKER - REMOVAL, SEAT BACK	23-116
LATERAL LINK - DESCRIPTION	2-38
LATERAL LINK - INSTALLATION	2-39
LATERAL LINK - OPERATION	2-38
LATERAL LINK - REMOVAL	2-38
LATERAL LINKS - DIAGNOSIS AND TESTING	2-38
LEAD - DIAGNOSIS AND TESTING, TIRE/VEHICLE	22-9
LEAK DETECTION ASSY - DESCRIPTION, NATURAL VAC	25-15
LEAK DETECTION ASSY - INSTALLATION, NATURAL VAC	25-16
LEAK DETECTION ASSY - REMOVAL, NATURAL VAC	25-15
LEAK DETECTION PUMP - INSTALLATION	25-17
LEAK DETECTION PUMP - REMOVAL	25-16
LEAK INSPECTION - DIAGNOSIS AND TESTING, ENGINE OIL	9-150,9-78,9-9
LEAK REPAIRING - STANDARD PROCEDURE, TIRE	22-11
LEAK TESTING - DIAGNOSIS AND TESTING, COOLING SYSTEM	7-22
LEAKAGE - DIAGNOSIS AND TESTING, TORQUE CONVERTER HOUSING FLUID	21-117
LEAKAGE TEST - DIAGNOSIS AND TESTING, CYLINDER COMBUSTION PRESSURE	9-150,9-78,9-9
LEAKS - DIAGNOSIS AND TESTING, INTAKE MANIFOLD	9-128,9-213,9-62
LEAKS - DIAGNOSIS AND TESTING, WATER	23-1
LEARN PROCEDURE - STANDARD PROCEDURE, QUICK	8E-11,8E-18
LEFT FRONT WHEELHOUSE SPLASH SHIELD - INSTALLATION	23-57
LEFT FRONT WHEELHOUSE SPLASH SHIELD - REMOVAL	23-57
LEFT IN IGNITION SWITCH - DIAGNOSIS AND TESTING, KEY	8B-3
LEFT LOWER INSTRUMENT PANEL TRIM - INSTALLATION	23-73
LEFT LOWER INSTRUMENT PANEL TRIM - REMOVAL	23-73
LEFT LOWER INSTRUMENT SILENCER PANEL - INSTALLATION	23-74
LEFT LOWER INSTRUMENT SILENCER PANEL - REMOVAL	23-74
LEFT MOUNT - INSTALLATION	9-118,9-200,9-51
LEFT MOUNT - REMOVAL	9-118,9-200,9-51
LEFT ON - DIAGNOSIS AND TESTING, EXTERIOR LAMPS	8B-3
LEVEL - STANDARD PROCEDURE, REFRIGERANT OIL	24-52
LEVEL - STANDARD PROCEDURE, SYSTEM CHARGE	24-9
LEVEL AND CONDITION CHECK, STANDARD PROCEDURE - FLUID	21-188
LEVEL CHECK - STANDARD PROCEDURE, ENGINE OIL	9-207

Description	Group-Page
LEVEL CHECK - STANDARD PROCEDURE, FLUID	21-82
LEVEL CHECK, ROUTINE - COOLANT	7-23
LEVEL CHECK, STANDARD PROCEDURE - ENGINE OIL	9-121,9-54
LEVEL CHECKING - STANDARD PROCEDURE, BRAKE FLUID	5-25
LEVEL CHECKING - STANDARD PROCEDURE, POWER STEERING FLUID	19-34
LEVEL SENDING UNIT / SENSOR - DESCRIPTION, FUEL	14-4
LEVEL SENDING UNIT / SENSOR - INSTALLATION, FUEL	14-5
LEVEL SENDING UNIT / SENSOR - OPERATION, FUEL	14-4
LEVEL SENDING UNIT / SENSOR - REMOVAL, FUEL	14-5
LEVEL SWITCH - INSTALLATION, BRAKE FLUID	5-5
LEVEL SWITCH - REMOVAL, BRAKE FLUID	5-5
LEVELING MOTOR - EXPORT - DIAGNOSIS AND TESTING, HEADLAMP	8L-16
LEVELING MOTOR - EXPORT - INSTALLATION, HEADLAMP	8L-16
LEVELING MOTOR - EXPORT - REMOVAL, HEADLAMP	8L-16
LEVELING SWITCH - EXPORT - DIAGNOSIS AND TESTING, HEADLAMP	8L-16
LEVELING SWITCH - INSTALLATION, HEADLAMP	8L-17
LEVELING SWITCH - REMOVAL, HEADLAMP	8L-17
LEVER - DESCRIPTION, CLUTCH RELEASE BEARING	6-12
LEVER - OPERATION, CLUTCH RELEASE BEARING	6-12
LEVER - PARKING BRAKE - INSTALLATION	5-45
LEVER - PARKING BRAKE - REMOVAL	5-44
LICENSE PLATE LAMP - INSTALLATION	8L-20
LICENSE PLATE LAMP - REMOVAL	8L-20
LICENSE PLATE LAMP UNIT - INSTALLATION	8L-21
LICENSE PLATE LAMP UNIT - JR27 ONLY - INSTALLATION	8L-21
LICENSE PLATE LAMP UNIT - JR27 ONLY - REMOVAL	8L-21
LICENSE PLATE LAMP UNIT - REMOVAL	8L-21
LIMITER SWITCH - DESCRIPTION, THERMAL	24-27
LIMITER SWITCH - DIAGNOSIS AND TESTING, THERMAL	24-27
LIMITER SWITCH - OPERATION, THERMAL	24-27
LIMITS - DESCRIPTION, HIGH AND LOW	25-9
LINE - DESCRIPTION, DISCHARGE	24-47
LINE - DESCRIPTION, SUCTION	24-48
LINE - INSTALLATION, DISCHARGE	24-47
LINE - INSTALLATION, SUCTION	24-48
LINE - REMOVAL, DISCHARGE	24-47
LINE - REMOVAL, SUCTION	24-48
LINE REPAIR - STANDARD PROCEDURE, REAR WINDOW DEFOGGER GRID	8G-4
LINES - DIAGNOSIS AND TESTING, REAR WINDOW DEFOGGER GRID	8G-4
LINES - INSTALLATION, HYDRAULIC	23-19
LINES - REMOVAL, HYDRAULIC	23-19
LINK - ADJUSTMENT, BALANCE	23-16
LINK - DESCRIPTION, LATERAL	2-38
LINK - DESCRIPTION, TRAILING	2-45
LINK - DESCRIPTION, TRD	21-238
LINK - DIAGNOSIS AND TESTING, TRAILING	2-45
LINK - INSTALLATION, LATERAL	2-39
LINK - INSTALLATION, TRAILING	2-45
LINK - OPERATION, LATERAL	2-38
LINK - OPERATION, TRAILING	2-45
LINK - OPERATION, TRD	21-238
LINK - REMOVAL, LATERAL	2-38
LINK - REMOVAL, TRAILING	2-45
LINKAGE - INSTALLATION, WIPER	8R-5
LINKAGE - REMOVAL, WIPER	8R-5
LINKAGE ADJUSTMENT, ADJUSTMENTS - GEARSHIFT	21-193
LINKS - DIAGNOSIS AND TESTING, LATERAL	2-38
LOADS - STANDARD PROCEDURE, TESTING FOR A SHORT TO GROUND ON FUSES POWERING SEVERAL	8W-01-10
LOCATION - DESCRIPTION, CONNECTOR/ GROUND/SPLICE	8W-91-1
LOCATIONS - DESCRIPTION, FLUID FILL/CHECK	0-6
LOCATIONS - JR-27 - SPECIFICATIONS, STRUCTURAL ADHESIVE	23-188
LOCATIONS - JR-27 AND JR-41 - SPECIFICATIONS, SEALER	23-152
LOCATIONS - JR-27 AND JR-41 - SPECIFICATIONS, WELD	23-206
LOCATIONS - JR-27 ONLY - SPECIFICATIONS, SEALER	23-156
LOCATIONS - JR-27 ONLY - SPECIFICATIONS, WELD	23-238
LOCATIONS - JR-41 - SPECIFICATIONS, STRUCTURAL ADHESIVE	23-199
LOCATIONS - JR-41 ONLY - SPECIFICATIONS, SEALER	23-172
LOCATIONS - JR-41 ONLY - SPECIFICATIONS, WELD	23-257
LOCK / UNLOCK SWITCH - DIAGNOSIS AND TESTING, DOOR	8N-4
LOCK / UNLOCK SWITCH - INSTALLATION, DOOR	8N-4
LOCK / UNLOCK SWITCH - REMOVAL, DOOR	8N-4
LOCK BUTTON BELL CRANK - INSTALLATION	23-37
LOCK BUTTON BELL CRANK - REMOVAL	23-37
LOCK CYLINDER - DESCRIPTION	23-38
LOCK CYLINDER - INSTALLATION	23-38
LOCK CYLINDER - INSTALLATION, DECKLID	23-25
LOCK CYLINDER - REMOVAL	23-38
LOCK CYLINDER - REMOVAL, DECKLID	23-25
LOCK MOTOR - DIAGNOSIS AND TESTING, DOOR	8N-4
LOCK SWITCH - INSTALLATION, DOOR CYLINDER	8N-4
LOCK SWITCH - REMOVAL, DOOR CYLINDER	8N-3
LOCKED ENGINE - STANDARD PROCEDURE, HYDROSTATIC	9-10,9-151,9-79
LOCKS - DESCRIPTION, POWER	8N-1
LOCKS - OPERATION, POWER	8N-2
LOW LIMITS - DESCRIPTION, HIGH	25-9
LOWER - INSPECTION, INTAKE MANIFOLD	9-214
LOWER - INSTALLATION, INTAKE MANIFOLD	9-215
LOWER - REMOVAL, INTAKE MANIFOLD	9-214
LOWER BALL JOINT - DESCRIPTION	2-11
LOWER BALL JOINT - DIAGNOSIS AND TESTING	2-11
LOWER BALL JOINT SEAL BOOT - INSTALLATION	2-12
LOWER BALL JOINT SEAL BOOT - REMOVAL	2-11
LOWER CONTROL ARM - DESCRIPTION	2-14
LOWER CONTROL ARM - DIAGNOSIS AND TESTING	2-14
LOWER CONTROL ARM - OPERATION	2-14
LOWER CONTROL ARM - REMOVAL	2-14
LOWER INSTRUMENT PANEL TRIM - INSTALLATION, LEFT	23-73
LOWER INSTRUMENT PANEL TRIM - INSTALLATION, RIGHT	23-75
LOWER INSTRUMENT PANEL TRIM - REMOVAL, LEFT	23-73
LOWER INSTRUMENT PANEL TRIM - REMOVAL, RIGHT	23-75
LOWER INSTRUMENT SILENCER PANEL - INSTALLATION, LEFT	23-74
LOWER INSTRUMENT SILENCER PANEL - REMOVAL, LEFT	23-74
LOWER QUARTER TRIM - INSTALLATION	23-87
LOWER QUARTER TRIM - REMOVAL	23-87
LOWER SILENCER PANEL - INSTALLATION, RIGHT	23-74
LOWER SILENCER PANEL - REMOVAL, RIGHT	23-74
LOWER TRIM - INSTALLATION, B-PILLAR	23-80
LOWER TRIM - REMOVAL, B-PILLAR	23-80
LUBRICANTS - DESCRIPTION, ENGINE OIL	0-1
LUBRICATION - DESCRIPTION	9-120,9-203,9-53
LUBRICATION - OPERATION	9-121,9-203,9-54
LUBRICATION POINTS - DESCRIPTION	0-6
LUBRICATION POINTS - STANDARD PROCEDURE	2-1
LUBRICATION, SPECIFICATIONS - BODY	23-10
MACHINING - STANDARD PROCEDURE, BRAKE DRUM	5-23
MACHINING - STANDARD PROCEDURE, BRAKE ROTOR	5-35
MAIN BEARING FITTING - STANDARD PROCEDURE, CRANKSHAFT	9-190
MANAGEMENT VALVE - DESCRIPTION, FLOW	14-4
MANAGEMENT VALVE - OPERATION, FLOW	14-4
MANAGER - DESCRIPTION, TASK	25-23
MANAGER - OPERATION, TASK	25-23
MANIFOLD - CLEANING, EXHAUST	9-130,9-63
MANIFOLD - CLEANING, INTAKE	9-129,9-62
MANIFOLD - INSPECTION, EXHAUST	9-130, 9-216,9-63
MANIFOLD - INSPECTION, INTAKE	9-129,9-62
MANIFOLD - INSTALLATION, EXHAUST	9-130, 9-216,9-64
MANIFOLD - INSTALLATION, INTAKE	9-129,9-62
MANIFOLD - REMOVAL, EXHAUST	9-130,9-215, 9-63
MANIFOLD - REMOVAL, INTAKE	9-128,9-62
MANIFOLD LEAKS - DIAGNOSIS AND TESTING, INTAKE	9-128,9-213,9-62
MANIFOLD LOWER - INSPECTION, INTAKE	9-214
MANIFOLD LOWER - INSTALLATION, INTAKE	9-215
MANIFOLD LOWER - REMOVAL, INTAKE	9-214
MANIFOLD UPPER - INSPECTION, INTAKE	9-214
MANIFOLD UPPER - INSTALLATION, INTAKE	9-214
MANIFOLD UPPER - REMOVAL, INTAKE	9-213
MANIFOLD VACUUM PORT REPAIR - STANDARD PROCEDURE, INTAKE	9-213
MANUAL - JR-27 - INSTALLATION	23-103
MANUAL - JR-27 ONLY - REMOVAL	23-102
MANUAL ADJUSTER - INSTALLATION	23-116
MANUAL ADJUSTER - REMOVAL	23-115
MANUAL TRANSAXLE - ASSEMBLY, T350	21-11
MANUAL TRANSAXLE - ASSEMBLY, T850	21-58
MANUAL TRANSAXLE - CLEANING, T350	21-10
MANUAL TRANSAXLE - DESCRIPTION, T350	21-2
MANUAL TRANSAXLE - DESCRIPTION, T850	21-43
MANUAL TRANSAXLE - DISASSEMBLY, T350	21-4
MANUAL TRANSAXLE - DISASSEMBLY, T850	21-53
MANUAL TRANSAXLE - INSPECTION, T350	21-10
MANUAL TRANSAXLE - INSTALLATION, T350	21-16
MANUAL TRANSAXLE - INSTALLATION, T850	21-66
MANUAL TRANSAXLE - OPERATION, T850	21-45
MANUAL TRANSAXLE - REMOVAL, T350	21-4
MANUAL TRANSAXLE - REMOVAL, T850	21-52
MANUAL TRANSAXLE - SPECIAL TOOLS, T350	21-18
MANUAL TRANSAXLE - SPECIFICATIONS, T350	21-16
MANUAL TRANSAXLE - SPECIFICATIONS, T850	21-67
MANUFACTURER PLATE - DESCRIPTION	Intro.-11
MAP SENSOR - DESCRIPTION	14-29
MAP SENSOR - OPERATION	14-29
MASK/LENS - INSTALLATION, INSTRUMENT CLUSTER	8J-2
MASK/LENS - REMOVAL, INSTRUMENT CLUSTER	8J-2
MASTER CYLINDER - INSTALLATION	5-28
MASTER CYLINDER - REMOVAL	5-27
MASTER CYLINDER (2.7L/T850 MODELS) - INSTALLATION, CLUTCH	6-9

Description	Group-Page
MASTER CYLINDER (2.7L/T850 MODELS) - REMOVAL, CLUTCH	6-8
MASTER CYLINDER BLEEDING - STANDARD PROCEDURE	5-27
MATCH MOUNTING - STANDARD PROCEDURE, TIRE AND WHEEL	22-6
MEASUREMENT - STANDARD PROCEDURE, CURB HEIGHT	2-57
MEASUREMENT AND ADJUSTMENT, ADJUSTMENTS - DIFFERENTIAL BEARING PRELOAD	21-186
MEASUREMENTS - JR-27 - SPECIFICATIONS, BODY GAP AND FLUSH	23-145
MEASURING BEARING CLEARANCE USING PLASTIGAGE - STANDARD PROCEDURE	9-12,9-81
MEASURING CAMSHAFT END PLAY - STANDARD PROCEDURE	9-96
MEASURING CRANKSHAFT END PLAY - STANDARD PROCEDURE	9-104
MECHANICAL - DIAGNOSIS AND TESTING, ENGINE DIAGNOSIS	9-148,9-7,9-76
MECHANISM - INSTALLATION, GEAR SHIFT	21-29,21-85
MECHANISM - INSTALLATION, GEARSHIFT	21-196
MECHANISM - INSTALLATION, SHIFT INTERLOCK	21-223
MECHANISM - REMOVAL, GEAR SHIFT	21-29, 21-85
MECHANISM - REMOVAL, GEARSHIFT	21-194
MECHANISM - REMOVAL, SHIFT INTERLOCK	21-223
MEMORIES, OPERATION - FUEL CORRECTION OR ADAPTIVE	14-18
METRIC SYSTEM - DESCRIPTION	Intro.-5
MICRO 420 BATTERY TESTER - STANDARD PROCEDURE, USING	8F-7
MINI TRIP COMPUTER/TRAVELER ILLUMINATION LAMP - INSTALLATION, COMPAPSS	8L-29
MINI TRIP COMPUTER/TRAVELER ILLUMINATION LAMP - REMOVAL, COMPAPSS	8L-29
MINI-TRIP COMPUTER - DIAGNOSIS AND TESTING, COMPASS	8M-2
MIRROR - DESCRIPTION, AUTOMATIC DAY / NIGHT	8N-8
MIRROR - DIAGNOSIS AND TESTING, AUTOMATIC DAY/NIGHT INSIDE	8N-8
MIRROR - INSTALLATION, SIDE VIEW	23-59
MIRROR - OPERATION, AUTOMATIC DAY / NIGHT	8N-8
MIRROR - REMOVAL, SIDE VIEW	23-59
MIRROR - REMOVAL, SIDEVIEW	8N-9
MIRROR FLAG/DOOR GLASS CHANNEL - INSTALLATION, SIDE VIEW	23-38
MIRROR FLAG/DOOR GLASS CHANNEL - REMOVAL, SIDE VIEW	23-38
MIRROR GLASS - INSTALLATION, SIDE VIEW	23-59
MIRROR GLASS - REMOVAL, SIDE VIEW	23-59
MIRROR SWITCH - DIAGNOSIS AND TESTING, POWER	8N-9
MIRROR SWITCH - INSTALLATION, POWER	8N-9
MIRROR SWITCH - REMOVAL, POWER	8N-9
MIRRORS - DESCRIPTION, POWER	8N-7
MIRRORS - DIAGNOSIS AND TESTING, POWER	8N-7
MIRRORS - OPERATION, POWER	8N-7
MISALIGNMENT - DIAGNOSIS AND TESTING, DRIVE PLATE	6-5
MODE DOOR ACTUATOR - DESCRIPTION	24-24
MODE DOOR ACTUATOR - INSTALLATION	24-25
MODE DOOR ACTUATOR - OPERATION	24-24
MODE DOOR ACTUATOR - REMOVAL	24-25
MODE, OPERATION - DRB III® STATE DISPLAY TEST	25-10
MODELS - INSTALLATION, T350 EQUIPPED	6-13
MODELS - INSTALLATION, T850 EQUIPPED	6-13
MODELS - REMOVAL, T350 EQUIPPED	6-12
MODELS - REMOVAL, T850 EQUIPPED	6-13
MODES OF OPERATION - OPERATION	14-16
MODULAR CLUTCH - DESCRIPTION	6-17
MODULAR CLUTCH - INSTALLATION	6-18
MODULAR CLUTCH - REMOVAL	6-18
MODULE - DESCRIPTION, BODY CONTROL	8E-2
MODULE - DESCRIPTION, FUEL PUMP	14-7
MODULE - DESCRIPTION, HEATED SEAT	8E-5
MODULE - DESCRIPTION, POWER	24-28
MODULE - DESCRIPTION, SENTRY KEY IMMOBILIZER	8E-13
MODULE - DESCRIPTION, TRANSMISSION CONTROL	8E-15
MODULE - DIAGNOSIS AND TESTING, HEATED SEAT	8E-5
MODULE - DIAGNOSIS AND TESTING, KEYLESS ENTRY	8N-5
MODULE - DIAGNOSIS AND TESTING, SEAT BELT CONTROL TIMER	8O-12
MODULE - INSTALLATION, BODY CONTROL	8E-3
MODULE - INSTALLATION, FUEL PUMP	14-7
MODULE - INSTALLATION, HEATED SEAT	8E-6
MODULE - INSTALLATION, POWER	24-28
MODULE - INSTALLATION, REMOTE KEYLESS ENTRY	8N-6
MODULE - INSTALLATION, SENTRY KEY IMMOBILIZER	8E-14
MODULE - INSTALLATION, SUNROOF EXPRESS	23-133
MODULE - JR27 - EXPORT - DESCRIPTION, SEAT BELT CONTROL TIMER	8O-12
MODULE - JR27 - EXPORT - INSTALLATION, SEAT BELT CONTROL TIMER	8O-14
MODULE - JR27 - EXPORT - OPERATION, SEAT BELT CONTROL TIMER	8O-12
MODULE - JR27 - EXPORT - REMOVAL, SEAT BELT CONTROL TIMER	8O-14
MODULE - OPERATION, BODY CONTROL	8E-3
MODULE - OPERATION, FUEL PUMP	14-7
MODULE - OPERATION, HEATED SEAT	8E-5
MODULE - OPERATION, POWER	24-28
MODULE - OPERATION, SENTRY KEY IMMOBILIZER	8E-14
MODULE - OPERATION, TRANSMISSION CONTROL	8E-15
MODULE - REMOVAL, BODY CONTROL	8E-3
MODULE - REMOVAL, FUEL PUMP	14-7
MODULE - REMOVAL, HEATED SEAT	8E-6
MODULE - REMOVAL, POWER	24-28
MODULE - REMOVAL, REMOTE KEYLESS ENTRY	8N-6
MODULE - REMOVAL, SENTRY KEY IMMOBILIZER	8E-14
MODULE - REMOVAL, SUNROOF EXPRESS	23-133
MODULE ASSEMBLY - INSTALLATION, SUNROOF	23-130
MODULE ASSEMBLY - REMOVAL, SUNROOF	23-130
MOLDING - INSTALLATION, A-PILLAR WEATHERSTRIP RETAINER	23-135
MOLDING - INSTALLATION, FRONT DOOR OUTER BELT	23-138
MOLDING - INSTALLATION, REAR DOOR OUTER BELT	23-142
MOLDING - INSTALLATION, UPPER DECK	23-91
MOLDING - REMOVAL, A-PILLAR WEATHERSTRIP RETAINER	23-135
MOLDING - REMOVAL, FRONT DOOR OUTER BELT	23-138
MOLDING - REMOVAL, REAR DOOR OUTER BELT	23-142
MOLDING - REMOVAL, UPPER DECK	23-91
MOLDINGS - INSTALLATION, BODY SIDE	23-53
MOLDINGS - REMOVAL, BODY SIDE	23-53
MONITORED COMPONENT - DESCRIPTION	25-1
MONITORED SYSTEMS - DESCRIPTION	25-6
MOTOR - DESCRIPTION, IDLE AIR CONTROL	14-27
MOTOR - DIAGNOSIS AND TESTING, DOOR LOCK	8N-4
MOTOR - DIAGNOSIS AND TESTING, IN-CAR SENSOR ASPIRATOR	24-21
MOTOR - DIAGNOSIS AND TESTING, WINDOW	8N-18
MOTOR - EXPORT - DIAGNOSIS AND TESTING, HEADLAMP LEVELING	8L-16
MOTOR - EXPORT - INSTALLATION, HEADLAMP LEVELING	8L-16
MOTOR - EXPORT - REMOVAL, HEADLAMP LEVELING	8L-16
MOTOR - INSTALLATION, BLOWER	24-29
MOTOR - INSTALLATION, SUNROOF DRIVE	23-127
MOTOR - INSTALLATION, WINDOW	8N-18
MOTOR - INSTALLATION, WIPER	8R-6
MOTOR - OPERATION, IDLE AIR CONTROL	14-27
MOTOR - REMOVAL, BLOWER	24-29
MOTOR - REMOVAL, SUNROOF DRIVE	23-126
MOTOR - REMOVAL, WINDOW	8N-18
MOTOR - REMOVAL, WIPER	8R-5
MOTOR ASSEMBLY - INSTALLATION, WIPER	8R-7
MOTOR ASSEMBLY - REMOVAL, WIPER	8R-7
MOTOR RELAY - DESCRIPTION, STARTER	8F-31
MOTOR RELAY - OPERATION, STARTER	8F-31
MOTOR RELAY - REMOVAL, STARTER	8F-31
MOTOR RESISTOR - DESCRIPTION, BLOWER	24-26
MOTOR RESISTOR - DIAGNOSIS AND TESTING-BLOWER MOTOR RESISTOR, BLOWER	24-26
MOTOR RESISTOR - INSTALLATION, BLOWER	24-27
MOTOR RESISTOR - OPERATION, BLOWER	24-26
MOTOR RESISTOR - REMOVAL, BLOWER	24-27
MOTOR RESISTOR, BLOWER MOTOR RESISTOR - DIAGNOSIS AND TESTING-BLOWER	24-26
MOTOR TEST - DIAGNOSIS AND TESTING, ELECTRIC FAN	7-40
MOTOR/PUMP ASSEMBLY - INSTALLATION, HYDRAULIC	23-20
MOTOR/PUMP ASSEMBLY - REMOVAL, HYDRAULIC	23-20
MOTOR/PUMP BLEEDING PROCEDURES - ADJUSTMENT, HYDRAULIC	23-14
MOUNT - INSTALLATION, FRONT	9-119,9-202, 9-52
MOUNT - INSTALLATION, LEFT	9-118,9-200,9-51
MOUNT - INSTALLATION, REAR	9-118,9-201, 9-52
MOUNT - INSTALLATION, RIGHT	9-119,9-201, 9-51
MOUNT - REMOVAL, FRONT	9-119,9-202,9-52
MOUNT - REMOVAL, LEFT	9-118,9-200,9-51
MOUNT - REMOVAL, REAR	9-118,9-201,9-52
MOUNT - REMOVAL, RIGHT	9-119,9-201,9-51
MOUNTED STOP LAMP - INSTALLATION, CENTER HIGH	8L-8
MOUNTED STOP LAMP - REMOVAL, CENTER HIGH	8L-8
MOUNTED STOP LAMP UNIT - INSTALLATION, CENTER HIGH	8L-9
MOUNTED STOP LAMP UNIT - JR27 ONLY - INSTALLATION, CENTER HIGH	8L-9
MOUNTED STOP LAMP UNIT - JR27 ONLY - REMOVAL, CENTER HIGH	8L-9
MOUNTED STOP LAMP UNIT - REMOVAL, CENTER HIGH	8L-8
MOUNTING - STANDARD PROCEDURE, TIRE AND WHEEL MATCH	22-6
MOUNTING STUDS - FRONT - INSTALLATION, WHEEL	22-13
MOUNTING STUDS - FRONT - REMOVAL, WHEEL	22-13
MOUNTING STUDS - REAR - INSTALLATION, WHEEL	22-14
MOUNTING STUDS - REAR - REMOVAL, WHEEL	22-14
MTC - INSTALLATION, A/C HEATER CONTROL	24-19
MTC - REMOVAL, A/C HEATER CONTROL	24-18
MUFFLER/PIPE ASSEMBLY - INSTALLATION	11-13
MUFFLER/PIPE ASSEMBLY - REMOVAL	11-12

Description	Group-Page
MULTI-FUNCTION SWITCH - DESCRIPTION	8L-21
MULTI-FUNCTION SWITCH - DIAGNOSIS AND TESTING	8L-22
MULTI-FUNCTION SWITCH - INSTALLATION	8L-24
MULTI-FUNCTION SWITCH - OPERATION	8L-21
MULTI-FUNCTION SWITCH - REMOVAL	8L-24
NATURAL VAC LEAK DETECTION ASSY - DESCRIPTION	25-15
NATURAL VAC LEAK DETECTION ASSY - INSTALLATION	25-16
NATURAL VAC LEAK DETECTION ASSY - REMOVAL	25-15
NGC CONTROLLER - INSTALLATION	8E-13
NGC CONTROLLER - REMOVAL	8E-12
NIGHT MIRROR - DESCRIPTION, AUTOMATIC DAY	8N-8
NIGHT MIRROR - OPERATION, AUTOMATIC DAY	8N-8
NOISE - DIAGNOSIS AND TESTING, EXCESSIVE EXHAUST SYSTEM	11-3
NOISE - DIAGNOSIS AND TESTING, TIRE	22-9
NOISE - DIAGNOSIS AND TESTING, WIND	23-2
NOISE DIAGNOSIS - DIAGNOSIS AND TESTING, HYDRAULIC LASH ADJUSTER	9-181
NOISE DIAGNOSIS, DIAGNOSIS AND TESTING - HYDRAULIC LASH ADJUSTER	9-32,9-99
NON-MONITORED CIRCUITS - OPERATION	25-5
NOZZLE - INSTALLATION, WASHER	8R-3
NOZZLE - REMOVAL, WASHER	8R-3
NUMBER - DESCRIPTION, VEHICLE IDENTIFICATION	Intro.-9
O2 SENSOR - DESCRIPTION	14-31
O2 SENSOR - OPERATION	14-31
OBTAINING DIAGNOSTIC TROUBLE CODES - STANDARD PROCEDURE	8E-10
OCCUPANT RESTRAINT CONTROLLER - DESCRIPTION	8O-9
OCCUPANT RESTRAINT CONTROLLER - INSTALLATION	8O-9
OCCUPANT RESTRAINT CONTROLLER - OPERATION	8O-9
OCCUPANT RESTRAINT CONTROLLER - REMOVAL	8O-9
OFF VEHICLE - INSTALLATION	9-180
OFF VEHICLE - REMOVAL	9-178
OIL - DESCRIPTION	9-206
OIL - DESCRIPTION, REFRIGERANT	24-51
OIL - DIAGNOSIS AND TESTING, REFRIGERANT	24-4
OIL - OPERATION, REFRIGERANT	24-52
OIL AND FILTER CHANGE - STANDARD PROCEDURE, ENGINE	9-121,9-206,9-54
OIL AND LUBRICANTS - DESCRIPTION, ENGINE	0-1
OIL COOLER - CLEANING, TRANSMISSION	7-46
OIL COOLER - DESCRIPTION, TRANSMISSION	7-46
OIL COOLER - INSPECTION, TRANSMISSION	7-46
OIL COOLER - INSTALLATION, TRANSMISSION	7-46
OIL COOLER - OPERATION, TRANSMISSION	7-46
OIL COOLER - REMOVAL, TRANSMISSION	7-46
OIL FEED TROUGH - INSTALLATION, REAR BEARING	21-38
OIL FEED TROUGH - REMOVAL, REAR BEARING	21-38
OIL FILTER - DESCRIPTION	9-123
OIL FILTER - INSTALLATION	9-123,9-207,9-56
OIL FILTER - REMOVAL	9-123,9-207,9-56
OIL FILTER ADAPTER - INSTALLATION	9-56
OIL FILTER ADAPTER - REMOVAL	9-56
OIL GALLERY CUP PLUG SERVICE - STANDARD PROCEDURE, CYLINDER HEAD	9-167
OIL GALLERY PLUGS - STANDARD PROCEDURE, ENGINE CORE	9-13,9-153,9-82
OIL LEAK INSPECTION - DIAGNOSIS AND TESTING, ENGINE	9-150,9-78,9-9
OIL LEVEL - STANDARD PROCEDURE, REFRIGERANT	24-52
OIL LEVEL CHECK - STANDARD PROCEDURE, ENGINE	9-207
OIL LEVEL CHECK, STANDARD PROCEDURE - ENGINE	9-121,9-54
OIL PAN - INSTALLATION	9-123,9-208,9-57
OIL PAN - REMOVAL	9-123,9-208,9-56
OIL PRESSURE - DIAGNOSIS AND TESTING, CHECKING ENGINE	9-121,9-206,9-54
OIL PRESSURE RELIEF VALVE - INSTALLATION	9-209
OIL PRESSURE RELIEF VALVE - REMOVAL	9-209
OIL PRESSURE SENSOR/SWITCH - INSTALLATION	9-124,9-57
OIL PRESSURE SENSOR/SWITCH - REMOVAL	9-124,9-57
OIL PRESSURE SWITCH - DESCRIPTION	9-209
OIL PRESSURE SWITCH - INSTALLATION	9-209
OIL PRESSURE SWITCH - REMOVAL	9-209
OIL PUMP - ASSEMBLY	9-127,9-212,9-60
OIL PUMP - ASSEMBLY	21-216
OIL PUMP - CLEANING	9-124,9-211
OIL PUMP - DESCRIPTION	21-214
OIL PUMP - DISASSEMBLY	9-124,9-210,9-58
OIL PUMP - DISASSEMBLY	21-215
OIL PUMP - INSPECTION	9-125,9-211,9-59
OIL PUMP - INSTALLATION	9-127,9-212,9-60
OIL PUMP - INSTALLATION, SEAL	21-217
OIL PUMP - OPERATION	21-214
OIL PUMP - REMOVAL	9-124,9-210,9-57
OIL PUMP - REMOVAL, SEAL	21-217
OIL PUMP VOLUME CHECK - STANDARD PROCEDURE	21-214
OIL SEAL - FRONT - INSTALLATION, CRANKSHAFT	9-108,9-192,9-42
OIL SEAL - FRONT - REMOVAL, CRANKSHAFT	9-108,9-191,9-41
OIL SEAL - REAR - INSTALLATION, CRANKSHAFT	9-109,9-192,9-43
OIL SEAL - REAR - REMOVAL, CRANKSHAFT	9-109,9-192,9-43
OIL SEAL RETAINER - INSTALLATION, CRANKSHAFT REAR	9-193
OIL SEAL RETAINER - REMOVAL, CRANKSHAFT REAR	9-193
OIL SEAL(S) - INSTALLATION, CAMSHAFT	9-28,9-96
OIL SEAL(S) - REMOVAL, CAMSHAFT	9-28,9-95
ON-BOARD DIAGNOSTIC SYSTEM - DIAGNOSIS AND TESTING	8F-19
OPEN-CIRCUIT VOLTAGE TEST - STANDARD PROCEDURE	8F-10
OPENING DIMENSION - JR-27 - SPECIFICATIONS, BODY	23-148
OPENING DIMENSIONS - JR-41 - SPECIFICATIONS, BODY	23-150
OPENING TRIM LACE - INSTALLATION	23-130
OPENING TRIM LACE - REMOVAL	23-130
OPENING TRIM WELT - INSTALLATION, DOOR	23-136
OPENING TRIM WELT - REMOVAL, DOOR	23-136
OPENING WEATHERSTRIP - INSTALLATION, DECKLID	23-135
OPENING WEATHERSTRIP - INSTALLATION, FRONT & REAR DOOR	23-137
OPENING WEATHERSTRIP - REMOVAL, DECKLID	23-135
OPENING WEATHERSTRIP - REMOVAL, FRONT & REAR DOOR	23-137
ORVR - OPERATION	25-17
OUTBOARD - INSTALLATION, SEAT BELT - REAR	8O-15
OUTBOARD - INSTALLATION, SEAT BELT & RETRACTOR - FRONT	8O-16
OUTBOARD - REMOVAL, SEAT BELT - REAR	8O-15
OUTBOARD - REMOVAL, SEAT BELT & RETRACTOR - FRONT	8O-15
OUTBOARD BEZEL - INSTALLATION, INSTRUMENT PANEL	23-72
OUTBOARD BEZEL - REMOVAL, INSTRUMENT PANEL	23-72
OUTER - INSTALLATION, CV BOOT	3-15
OUTER - INSTALLATION, TIE ROD	19-28
OUTER - REMOVAL, CV BOOT	3-14
OUTER - REMOVAL, TIE ROD	19-28
OUTER BELT MOLDING - INSTALLATION, FRONT DOOR	23-138
OUTER BELT MOLDING - INSTALLATION, REAR DOOR	23-142
OUTER BELT MOLDING - REMOVAL, FRONT DOOR	23-138
OUTER BELT MOLDING - REMOVAL, REAR DOOR	23-142
OUTER BELT WEATHERSTRIP/MOLDING - INSTALLATION, QUARTER PANEL	23-141
OUTER BELT WEATHERSTRIP/MOLDING - REMOVAL, QUARTER PANEL	23-141
OUTER DOOR BELT WEATHERSTRIP - INSTALLATION	23-140
OUTER DOOR BELT WEATHERSTRIP - REMOVAL	23-140
OUTLET - INSTALLATION, CENTER CONSOLE POWER	8W-97-2
OUTLET - INSTALLATION, POWER	8W-97-5
OUTLET - REMOVAL, CENTER CONSOLE POWER	8W-97-1
OUTLET - REMOVAL, POWER	8W-97-5
OUTLET CONNECTOR - INSTALLATION, COOLANT	7-28
OUTLET CONNECTOR - REMOVAL, COOLANT	7-27
OUTLETS - INSTALLATION, INSTRUMENT PANEL A/C	24-40
OUTLETS - REMOVAL, INSTRUMENT PANEL A/C	24-40
OUTPUT - DESCRIPTION, SPEED SENSOR	21-228
OUTPUT - INSTALLATION, SPEED SENSOR	21-230
OUTPUT - OPERATION, 5 VOLT SUPPLY - PCM	8E-10
OUTPUT - OPERATION, SPEED SENSOR	21-229
OUTPUT - REMOVAL, SPEED SENSOR	21-229
OUTPUT - SBEC CONTROLLER - OPERATION, 8-VOLT SUPPLY - PCM	8E-10
OUTPUT BEARING AND RACE - INSTALLATION	21-37
OUTPUT BEARING AND RACE - REMOVAL	21-36
OUTPUT SHAFT - DISASSEMBLY	21-38
PADS/SHOES - REAR DRUM - CLEANING, BRAKE	5-13
PADS/SHOES - REAR DRUM - INSPECTION, BRAKE	5-13
PADS/SHOES - REAR DRUM - INSTALLATION, BRAKE	5-13
PADS/SHOES - REAR DRUM - REMOVAL, BRAKE	5-12
PAINT CODE - DESCRIPTION	23-94
PAINTED SURFACE TOUCH-UP - DESCRIPTION	23-94
PAN - INSTALLATION, OIL	9-123,9-208,9-57
PAN - REMOVAL, OIL	9-123,9-208,9-56
PANEL - INSTALLATION, COWL TRIM	23-82
PANEL - INSTALLATION, DASH	23-77
PANEL - INSTALLATION, DOOR SILL TRIM	23-82
PANEL - INSTALLATION, LEFT LOWER INSTRUMENT SILENCER	23-74
PANEL - INSTALLATION, QUARTER TRIM	23-87
PANEL - INSTALLATION, REAR SHELF TRIM	23-88
PANEL - INSTALLATION, RIGHT LOWER SILENCER	23-74
PANEL - INSTALLATION, SUNROOF GLASS	23-128
PANEL - INSTALLATION, TRIM	23-39,23-50
PANEL - REMOVAL, COWL TRIM	23-82
PANEL - REMOVAL, DASH	23-76
PANEL - REMOVAL, DOOR SILL TRIM	23-82
PANEL - REMOVAL, LEFT LOWER INSTRUMENT SILENCER	23-74
PANEL - REMOVAL, QUARTER TRIM	23-87
PANEL - REMOVAL, REAR SHELF TRIM	23-88
PANEL - REMOVAL, RIGHT LOWER SILENCER	23-74
PANEL - REMOVAL, SUNROOF GLASS	23-128
PANEL - REMOVAL, TRIM	23-39,23-49
PANEL A/C OUTLETS - INSTALLATION, INSTRUMENT	24-40
PANEL A/C OUTLETS - REMOVAL, INSTRUMENT	24-40

Description	Group-Page
PANEL ASSEMBLY - INSTALLATION, INSTRUMENT	23-68
PANEL ASSEMBLY - REMOVAL, INSTRUMENT	23-67
PANEL CENTER BEZEL - INSTALLATION, INSTRUMENT	23-70
PANEL CENTER BEZEL - REMOVAL, INSTRUMENT	23-70
PANEL CLUSTER BEZEL - INSTALLATION, INSTRUMENT	23-70
PANEL CLUSTER BEZEL - REMOVAL, INSTRUMENT	23-70
PANEL CONSOLE - INSTALLATION, FORWARD INSTRUMENT	23-84
PANEL CONSOLE - REMOVAL, FORWARD INSTRUMENT	23-84
PANEL END COVER - INSTALLATION, INSTRUMENT	23-71
PANEL END COVER - REMOVAL, INSTRUMENT	23-71
PANEL INBOARD BEZEL - INSTALLATION, INSTRUMENT	23-72
PANEL INBOARD BEZEL - REMOVAL, INSTRUMENT	23-72
PANEL OUTBOARD BEZEL - INSTALLATION, INSTRUMENT	23-72
PANEL OUTBOARD BEZEL - REMOVAL, INSTRUMENT	23-72
PANEL OUTER BELT WEATHERSTRIP/ MOLDING - INSTALLATION, QUARTER	23-141
PANEL OUTER BELT WEATHERSTRIP/ MOLDING - REMOVAL, QUARTER	23-141
PANEL REPAIR - STANDARD PROCEDURE, PLASTIC BODY	23-3
PANEL SEAL - INSTALLATION, SUNROOF GLASS	23-128
PANEL SEAL - REMOVAL, SUNROOF GLASS	23-128
PANEL TOP COVER - INSTALLATION, INSTRUMENT	23-73
PANEL TOP COVER - REMOVAL, INSTRUMENT	23-73
PANEL TRIM - INSTALLATION, LEFT LOWER INSTRUMENT	23-73
PANEL TRIM - INSTALLATION, RIGHT LOWER INSTRUMENT	23-75
PANEL TRIM - REMOVAL, LEFT LOWER INSTRUMENT	23-73
PANEL TRIM - REMOVAL, RIGHT LOWER INSTRUMENT	23-75
PANEL TRIM BEZEL - INSTALLATION, RIGHT INSTRUMENT	23-75
PANEL TRIM BEZEL - REMOVAL, RIGHT INSTRUMENT	23-75
PANEL WEATHERSTRIP - INSTALLATION, QUARTER	23-141
PANEL WEATHERSTRIP - REMOVAL, QUARTER	23-140
PARKING BRAKE - ADJUSTMENT	5-39
PARKING BRAKE - INSTALLATION, CABLES	5-42
PARKING BRAKE - INSTALLATION, LEVER	5-45
PARKING BRAKE - INSTALLATION, SHOES	5-47
PARKING BRAKE - REMOVAL, CABLES	5-40
PARKING BRAKE - REMOVAL, LEVER	5-44
PARKING BRAKE - REMOVAL, SHOES	5-46
PARK/TURN SIGNAL LAMP - INSTALLATION	8L-24
PARK/TURN SIGNAL LAMP - REMOVAL	8L-24
PARTS - DESCRIPTION, FFV REPLACEMENT	14-2
PASSENGER AIRBAG - DESCRIPTION	8O-10
PASSENGER AIRBAG - INSTALLATION	8O-10
PASSENGER AIRBAG - OPERATION	8O-10
PASSENGER AIRBAG - REMOVAL	8O-10
PATTERNS - DIAGNOSIS AND TESTING, TIRE WEAR	22-9
PCM GROUND - OPERATION	8E-10
PCM INPUT - OPERATION, DATA BUS COMMUNICATION RECEIVE	8E-9
PCM INPUT - OPERATION, IGNITION SENSE	8E-9
PCM INPUT - OPERATION, SENSOR RETURN	8E-9
PCM OUTPUT - OPERATION, 5 VOLT SUPPLY	8E-10
PCM OUTPUT - SBEC CONTROLLER - OPERATION, 8-VOLT SUPPLY	8E-10
PCM REPLACEMENT, DESCRIPTION	8E-9
PCM/SKIM PROGRAMMING - STANDARD PROCEDURE	8E-1
PCV SYSTEM - DIAGNOSIS AND TESTING	25-20
PCV VALVE - DESCRIPTION	25-19
PCV VALVE - OPERATION	25-20
PEDAL - INSTALLATION, ACCELERATOR	14-22
PEDAL - INSTALLATION, CLUTCH	6-10
PEDAL - REMOVAL, ACCELERATOR	14-21
PEDAL - REMOVAL, CLUTCH	6-9
PEDAL INTERLOCK SWITCH - DIAGNOSIS AND TESTING, CLUTCH	6-10
PEDAL INTERLOCK SWITCH - INSTALLATION, CLUTCH	6-11
PEDAL INTERLOCK SWITCH - REMOVAL, CLUTCH	6-11
PERFORMANCE - DIAGNOSIS AND TESTING, ENGINE DIAGNOSIS	9-146,9-5,9-74
PERFORMANCE - DIAGNOSIS AND TESTING, HEATER	24-2
PIN - ADJUSTMENTS, DOWEL	23-16
PIN ASSEMBLY - INSTALLATION, DOOR	23-43
PIN ASSEMBLY - REMOVAL, DOOR	23-43
PIN BUSHINGS (DISC/DISC BRAKES) - ASSEMBLY, CALIPER GUIDE	5-17,5-21
PIN BUSHINGS (DISC/DISC BRAKES) - DISASSEMBLY, CALIPER GUIDE	5-16,5-20
PINION FACTOR SETTING - STANDARD PROCEDURE	8E-10,8E-17
PIPE - 2.7L - INSTALLATION, CROSS-UNDER	11-11
PIPE - 2.7L - INSTALLATION, EXHAUST PIPE - CROSS-UNDER PIPE TO RESONATOR	11-12
PIPE - 2.7L - REMOVAL, CROSS-UNDER	11-11
PIPE - 2.7L - REMOVAL, EXHAUST PIPE - CROSS-UNDER PIPE TO RESONATOR	11-12
PIPE - CROSS-UNDER PIPE TO RESONATOR PIPE - 2.7L - INSTALLATION, EXHAUST	11-12
PIPE - CROSS-UNDER PIPE TO RESONATOR PIPE - 2.7L - REMOVAL, EXHAUST	11-12
PIPE TO RESONATOR PIPE - 2.7L - INSTALLATION, EXHAUST PIPE - CROSS-UNDER	11-12
PIPE TO RESONATOR PIPE - 2.7L - REMOVAL, EXHAUST PIPE - CROSS-UNDER	11-12
PISTON & CONNECTING ROD - DESCRIPTION	9-111,9-194,9-44
PISTON & CONNECTING ROD - INSTALLATION	9-113,9-195,9-46
PISTON & CONNECTING ROD - REMOVAL	9-112,9-194,9-44
PISTON AND SEAL - ASSEMBLY, CALIPER	5-17,5-21
PISTON AND SEAL - DISASSEMBLY, CALIPER	5-16,5-20
PISTON RING - FITTING - STANDARD PROCEDURE	9-47
PISTON RING, FITTING	9-114
PISTON RING FITTING - STANDARD PROCEDURE	9-197
PISTON RINGS - INSTALLATION	9-197,9-48
PISTON RINGS - REMOVAL	9-197,9-48
PISTON TO CYLINDER BORE FITTING - STANDARD PROCEDURE	9-111,9-44
PISTONS - STANDARD PROCEDURE, FITTING	9-194
PLANETARY GEARTRAIN - DESCRIPTION	21-216
PLANETARY GEARTRAIN - OPERATION	21-216
PLASTIC BODY PANEL REPAIR - STANDARD PROCEDURE	23-3
PLASTIGAGE - STANDARD PROCEDURE, MEASURING BEARING CLEARANCE USING	9-12,9-81
PLATE - DESCRIPTION, BODY CODE	Intro.-1
PLATE - DESCRIPTION, MANUFACTURER	Intro.-11
PLATE - INSTALLATION, FLEX	9-111
PLATE - INSTALLATION, SUPPORT	5-37
PLATE - REMOVAL, FLEX	9-111
PLATE - REMOVAL, SUPPORT	5-37
PLATE LAMP - INSTALLATION, LICENSE	8L-20
PLATE LAMP - REMOVAL, LICENSE	8L-20
PLATE LAMP UNIT - INSTALLATION, LICENSE	8L-21
PLATE LAMP UNIT - JR27 ONLY - INSTALLATION, LICENSE	8L-21
PLATE LAMP UNIT - JR27 ONLY - REMOVAL, LICENSE	8L-21
PLATE LAMP UNIT - REMOVAL, LICENSE	8L-21
PLATE MISALIGNMENT - DIAGNOSIS AND TESTING, DRIVE	6-5
PLATINUM PLUGS - DESCRIPTION	8I-8
PLAY - ADJUSTMENT, DIFFERENTIAL SIDE GEAR END	21-82
PLAY - STANDARD PROCEDURE, CRANKSHAFT END	9-187,9-37
PLAY - STANDARD PROCEDURE, MEASURING CAMSHAFT END	9-96
PLAY - STANDARD PROCEDURE, MEASURING CRANKSHAFT END	9-104
PLUG CABLE - DESCRIPTION, SPARK	8I-8
PLUG CABLE RESISTANCE, SPECIFICATIONS - SPARK	8I-2
PLUG SERVICE - STANDARD PROCEDURE, CYLINDER HEAD OIL GALLERY CUP	9-167
PLUG, SPECIFICATIONS - SPARK	8I-2
PLUGS - DESCRIPTION, PLATINUM	8I-8
PLUGS - STANDARD PROCEDURE, ENGINE CORE AND OIL GALLERY	9-13,9-153, 9-82
PLUS - DESCRIPTION, ABS	5-49
PLUS - OPERATION, ABS	5-51
POINTS - DESCRIPTION, LUBRICATION	0-6
POINTS - STANDARD PROCEDURE, LUBRICATION	2-1
POLISHING - DESCRIPTION, FINESSE SANDING/BUFFING	23-94
PORT REPAIR - STANDARD PROCEDURE, INTAKE MANIFOLD VACUUM	9-213
PORT VALVE CORE - DESCRIPTION, SERVICE	24-50
PORT VALVE CORE - OPERATION, SERVICE	24-50
POSITION LAMP - EXPORT - INSTALLATION, FRONT	8L-14
POSITION LAMP - EXPORT - REMOVAL, FRONT	8L-13
POSITION SENSOR - DESCRIPTION, CAMSHAFT	8I-3
POSITION SENSOR - DESCRIPTION, CRANKSHAFT	14-22
POSITION SENSOR - DESCRIPTION, THROTTLE	14-38
POSITION SENSOR - OPERATION, CAMSHAFT	8I-3
POSITION SENSOR - OPERATION, CRANKSHAFT	14-22
POSITION SENSOR - OPERATION, THROTTLE	14-38
POTENTIAL - STANDARD PROCEDURE, TESTING OF VOLTAGE	8W-01-9
POWER - INSTALLATION, FRONT SEAT ADJUSTER	23-115
POWER - JR-27 - REMOVAL	23-102
POWER - JR-27 ONLY - INSTALLATION	23-103
POWER - REMOVAL, FRONT SEAT ADJUSTER	23-115
POWER ANTENNA - EXPORT - DIAGNOSIS AND TESTING	8A-7
POWER ANTENNA - EXPORT - INSTALLATION	8A-7
POWER ANTENNA - EXPORT - REMOVAL	8A-7
POWER BRAKE BOOSTER - DIAGNOSIS AND TESTING	5-28
POWER BRAKE BOOSTER - INSTALLATION	5-30
POWER BRAKE BOOSTER - REMOVAL	5-28
POWER DISTRIBUTION - DESCRIPTION	8W-97-1
POWER DISTRIBUTION - OPERATION	8W-97-1
POWER DISTRIBUTION CENTER - DESCRIPTION	8W-97-4
POWER DISTRIBUTION CENTER - INSTALLATION	8W-97-5
POWER DISTRIBUTION CENTER - OPERATION	8W-97-4
POWER DISTRIBUTION CENTER - REMOVAL	8W-97-4
POWER LOCKS - DESCRIPTION	8N-1

Description	Group-Page
POWER LOCKS - OPERATION	8N-2
POWER MIRROR SWITCH - DIAGNOSIS AND TESTING	8N-9
POWER MIRROR SWITCH - INSTALLATION	8N-9
POWER MIRROR SWITCH - REMOVAL	8N-9
POWER MIRRORS - DESCRIPTION	8N-7
POWER MIRRORS - DIAGNOSIS AND TESTING	8N-7
POWER MIRRORS - OPERATION	8N-7
POWER MODULE - DESCRIPTION	24-28
POWER MODULE - INSTALLATION	24-28
POWER MODULE - OPERATION	24-28
POWER MODULE - REMOVAL	24-28
POWER OUTLET - INSTALLATION	8W-97-5
POWER OUTLET - INSTALLATION, CENTER CONSOLE	8W-97-2
POWER OUTLET - REMOVAL	8W-97-5
POWER OUTLET - REMOVAL, CENTER CONSOLE	8W-97-1
POWER SEAT SYSTEM - DESCRIPTION	8N-10
POWER SEAT SYSTEM - DIAGNOSIS AND TESTING	8N-11
POWER SEAT SYSTEM - OPERATION	8N-11
POWER SEAT TRACK - DESCRIPTION	8N-14
POWER SEAT TRACK - DIAGNOSIS AND TESTING	8N-15
POWER SEAT TRACK - INSTALLATION	8N-16
POWER SEAT TRACK - OPERATION	8N-14
POWER SEAT TRACK - REMOVAL	8N-16
POWER STEERING FASTENER TORQUE, SPECIFICATIONS	19-8
POWER STEERING FLOW AND PRESSURE TEST - DIAGNOSIS AND TESTING	19-2
POWER STEERING FLUID LEVEL CHECKING - STANDARD PROCEDURE	19-34
POWER STEERING PRESSURE SWITCH - DESCRIPTION	19-27
POWER STEERING PRESSURE SWITCH - INSTALLATION	19-27
POWER STEERING PRESSURE SWITCH - OPERATION	19-27
POWER STEERING PRESSURE SWITCH - REMOVAL	19-27
POWER STEERING PUMP INITIAL OPERATION - STANDARD PROCEDURE	19-30
POWER STEERING, SPECIAL TOOLS	19-9
POWER WINDOWS - DESCRIPTION	8N-17
POWER WINDOWS - DIAGNOSIS AND TESTING	8N-17
POWER WINDOWS - OPERATION	8N-17
POWERING SEVERAL LOADS - STANDARD PROCEDURE, TESTING FOR A SHORT TO GROUND ON FUSES	8W-01-10
PRECAUTIONS AND WARNINGS, WARNING - SAFETY	23-1
PRECAUTIONS, WARNING - WINDSHIELD SAFETY	23-118
PRELOAD ADJUSTMENT / SHIM SELECTION, ADJUSTMENTS - DIFFERENTIAL BEARING	21-25
PRELOAD MEASUREMENT AND ADJUSTMENT, ADJUSTMENTS - DIFFERENTIAL BEARING	21-186
PREPARATION - STANDARD PROCEDURE, ENGINE GASKET SURFACE	9-12,9-153,9-81
PRESSURE - DIAGNOSIS AND TESTING, CHECKING ENGINE OIL	9-121,9-206,9-54
PRESSURE - INSTALLATION, HOSE	19-35
PRESSURE - REMOVAL, HOSE	19-34
PRESSURE CAP - DESCRIPTION	7-36
PRESSURE CAP - OPERATION	7-37
PRESSURE CAP TESTING - DIAGNOSIS AND TESTING	7-37
PRESSURE CONTAINER - 2.7L - DESCRIPTION, COOLANT	7-29
PRESSURE CONTAINER - 2.7L - INSTALLATION, COOLANT	7-29
PRESSURE CONTAINER - 2.7L - OPERATION, COOLANT	7-29
PRESSURE CONTAINER - 2.7L - REMOVAL, COOLANT	7-29
PRESSURE FOR HIGH SPEED OPERATION - STANDARD PROCEDURE, TIRE	22-11
PRESSURE GAUGE - STANDARD PROCEDURE, FUEL	14-2
PRESSURE LEAKAGE TEST - DIAGNOSIS AND TESTING, CYLINDER COMBUSTION	9-150,9-78,9-9
PRESSURE REGULATOR - INSTALLATION, FUEL	14-6
PRESSURE REGULATOR - OPERATION, FUEL	14-6
PRESSURE REGULATOR - REMOVAL, FUEL	14-6
PRESSURE RELEASE PROCEDURE - STANDARD PROCEDURE, FUEL SYSTEM	14-2
PRESSURE RELIEF TESTING - DIAGNOSIS AND TESTING, COOLING SYSTEM	7-37
PRESSURE RELIEF VALVE - INSTALLATION, OIL	9-209
PRESSURE RELIEF VALVE - REMOVAL, OIL	9-209
PRESSURE SENSOR/SWITCH - INSTALLATION, OIL	9-124,9-57
PRESSURE SENSOR/SWITCH - REMOVAL, OIL	9-124,9-57
PRESSURE, SPECIFICATIONS - FUEL SYSTEM	14-3
PRESSURE SWITCH - DESCRIPTION, OIL	9-209
PRESSURE SWITCH - DESCRIPTION, POWER STEERING	19-27
PRESSURE SWITCH - INSTALLATION, OIL	9-209
PRESSURE SWITCH - INSTALLATION, POWER STEERING	19-27
PRESSURE SWITCH - OPERATION, POWER STEERING	19-27
PRESSURE SWITCH - REMOVAL, OIL	9-209
PRESSURE SWITCH - REMOVAL, POWER STEERING	19-27
PRESSURE TEST - DIAGNOSIS AND TESTING, CYLINDER COMPRESSION	9-150,9-78, 9-9
PRESSURE TEST - DIAGNOSIS AND TESTING, POWER STEERING FLOW	19-2
PRESSURE TESTS - DIAGNOSIS AND TESTING, CLUTCH AIR	21-116
PRESSURE TESTS - DIAGNOSIS AND TESTING, HYDRAULIC	21-114
PRESSURE TRANSDUCER - DESCRIPTION, A/C	24-19
PRESSURE TRANSDUCER - INSTALLATION, A/C	24-19
PRESSURE TRANSDUCER - OPERATION, A/C	24-19
PRESSURE TRANSDUCER - REMOVAL, A/C	24-19
PRESSURES - STANDARD PROCEDURE, TIRE INFLATION	22-10
PRE-WHEEL ALIGNMENT INSPECTION - STANDARD PROCEDURE	2-57
PROBLEM CAUSES - DIAGNOSIS AND TESTING, COMMON	21-3,21-52
PROGRAMMABLE COMMUNICATIONS INTERFACE (PCI) BUS, OPERATION	14-19
PROGRAMMING - STANDARD PROCEDURE, PCM/SKIM	8E-1
PROGRAMMING - STANDARD PROCEDURE, RKE TRANSMITTER	8N-5
PROGRAMMING - STANDARD PROCEDURE, TRANSPONDER	8Q-4
PROP - INSTALLATION, GAS	23-24
PROP - REMOVAL, GAS	23-24
PROP ROD - INSTALLATION	23-65
PROP ROD - REMOVAL	23-65
PROPORTIONING - DESCRIPTION, ELECTRONIC VARIABLE BRAKE	5-49
PROPORTIONING - OPERATION, ELECTRONIC VARIABLE BRAKE	5-51
PROPORTIONING VALVE - DESCRIPTION	5-30
PROPORTIONING VALVE - DIAGNOSIS AND TESTING	5-30
PROPORTIONING VALVE - OPERATION	5-30
PULLEY - INSTALLATION, TIMING BELT TENSIONER	9-137,9-70
PULLEY - REMOVAL, TIMING BELT TENSIONER	9-136,9-70
PUMP - ASSEMBLY, OIL	9-127,9-212,9-60
PUMP - ASSEMBLY, OIL	21-216
PUMP - CLEANING, OIL	9-124,9-211
PUMP - DESCRIPTION	19-29
PUMP - DESCRIPTION, FUEL	14-6
PUMP - DESCRIPTION, OIL	21-214
PUMP - DIAGNOSIS AND TESTING, WATER	7-42
PUMP - DISASSEMBLY, OIL	9-124,9-210,9-58
PUMP - DISASSEMBLY, OIL	21-215
PUMP - INSPECTION, OIL	9-125,9-211,9-59
PUMP - INSTALLATION, LEAK DETECTION	25-17
PUMP - INSTALLATION, OIL	9-127,9-212,9-60
PUMP - INSTALLATION, SEAL - OIL	21-217
PUMP - INSTALLATION, WASHER RESERVOIR	8R-4
PUMP - OPERATION	19-29
PUMP - OPERATION, FUEL	14-7
PUMP - OPERATION, OIL	21-214
PUMP - REMOVAL, LEAK DETECTION	25-16
PUMP - REMOVAL, OIL	9-124,9-210,9-57
PUMP - REMOVAL, SEAL - OIL	21-217
PUMP - REMOVAL, WASHER RESERVOIR	8R-4
PUMP (2.0L/2.4L ENGINE) - INSTALLATION	19-33
PUMP (2.0L/2.4L ENGINE) - REMOVAL	19-30
PUMP (2.7L ENGINE) - INSTALLATION	19-34
PUMP (2.7L ENGINE) - REMOVAL	19-31
PUMP INITIAL OPERATION - STANDARD PROCEDURE, POWER STEERING	19-30
PUMP MODULE - DESCRIPTION, FUEL	14-7
PUMP MODULE - INSTALLATION, FUEL	14-7
PUMP MODULE - OPERATION, FUEL	14-7
PUMP MODULE - REMOVAL, FUEL	14-7
PUMP (PULLEY) - ASSEMBLY	19-32
PUMP (PULLEY) - DISASSEMBLY	19-32
PUMP RELAY - DESCRIPTION, FUEL	14-27
PUMP RELAY - OPERATION, FUEL	14-27
PUMP VOLUME CHECK - STANDARD PROCEDURE, OIL	21-214
QUARTER GLASS ADJUSTMENT, ADJUSTMENTS	23-96
QUARTER GLASS JR-27 - INSTALLATION, ADJUSTABLE	23-95
QUARTER GLASS JR-27 - REMOVAL, ADJUSTABLE	23-95
QUARTER PANEL OUTER BELT WEATHERSTRIP/MOLDING - INSTALLATION	23-141
QUARTER PANEL OUTER BELT WEATHERSTRIP/MOLDING - REMOVAL	23-141
QUARTER PANEL WEATHERSTRIP - INSTALLATION	23-141
QUARTER PANEL WEATHERSTRIP - REMOVAL	23-140
QUARTER TRIM - INSTALLATION, LOWER	23-87
QUARTER TRIM - INSTALLATION, UPPER	23-92
QUARTER TRIM - REMOVAL, LOWER	23-87
QUARTER TRIM - REMOVAL, UPPER	23-91
QUARTER TRIM PANEL - INSTALLATION	23-87
QUARTER TRIM PANEL - REMOVAL	23-87
QUICK LEARN PROCEDURE - STANDARD PROCEDURE	8E-11,8E-18
QUICK-CONNECT FITTINGS - STANDARD PROCEDURE	14-12
RACE - INSTALLATION, OUTPUT BEARING	21-37
RACE - REMOVAL, OUTPUT BEARING	21-36
RADIAL-PLY TIRES - DESCRIPTION	22-9
RADIATOR - CLEANING	7-36
RADIATOR - INSPECTION	7-36
RADIATOR - INSTALLATION	7-36
RADIATOR - REMOVAL	7-35
RADIATOR DRAINCOCK - INSTALLATION	7-36
RADIATOR DRAINCOCK - REMOVAL	7-36
RADIATOR FAN CONTROL - DIAGNOSIS AND TESTING	7-39
RADIATOR FAN(S) - DESCRIPTION	7-39
RADIATOR FAN(S) - OPERATION	7-39
RADIATOR SUPPORT CROSSMEMBER - INSTALLATION	23-58
RADIATOR SUPPORT CROSSMEMBER - REMOVAL	23-57
RADIO - DESCRIPTION	8A-10
RADIO - INSTALLATION	8A-10
RADIO - OPERATION	8A-10
RADIO - REMOVAL	8A-10

Description	Group-Page
RAIL BUSHINGS - INSTALLATION, SHIFT	21-39
RAIL BUSHINGS - REMOVAL, SHIFT	21-39
RAIL WEATHERSTRIP - INSTALLATION, DRIP	23-137
RAIL WEATHERSTRIP - INSTALLATION, SIDE	23-144
RAIL WEATHERSTRIP - REMOVAL, DRIP	23-136
RAIL WEATHERSTRIP - REMOVAL, SIDE	23-143
RANGE INDICATOR ILLUMINATION - INSTALLATION, TRANSMISSION	8L-31
RANGE INDICATOR ILLUMINATION - REMOVAL, TRANSMISSION	8L-31
RANGE SENSOR - DESCRIPTION, TRANSMISSION	21-237
RANGE SENSOR - INSTALLATION, TRANSMISSION	21-238
RANGE SENSOR - OPERATION, TRANSMISSION	21-237
RANGE SENSOR - REMOVAL, TRANSMISSION	21-238
READING LAMP - INSTALLATION	8L-30
READING LAMP - REMOVAL	8L-30
REAR - 2.7L - INSPECTION, CATALYTIC CONVERTER	11-9
REAR - 2.7L - INSTALLATION, CATALYTIC CONVERTER	11-10
REAR - 2.7L - REMOVAL, CATALYTIC CONVERTER	11-9
REAR - INSTALLATION, CRANKSHAFT OIL SEAL	9-109,9-192,9-43
REAR - INSTALLATION, WHEEL MOUNTING STUDS	22-14
REAR - REMOVAL, CRANKSHAFT OIL SEAL	9-109,9-192,9-43
REAR - REMOVAL, WHEEL MOUNTING STUDS	22-14
REAR BEARING OIL FEED TROUGH - INSTALLATION	21-38
REAR BEARING OIL FEED TROUGH - REMOVAL	21-38
REAR BUMPER REINFORCEMENT - INSTALLATION	13-3
REAR BUMPER REINFORCEMENT - REMOVAL	13-3
REAR CENTER - INSTALLATION, SEAT BELT & RETRACTOR	8O-16
REAR CENTER - REMOVAL, SEAT BELT & RETRACTOR	8O-16
REAR CHECK STRAP - INSTALLATION	23-46
REAR CHECK STRAP - REMOVAL	23-46
REAR DISC BRAKE CALIPER - INSTALLATION	5-22
REAR DISC BRAKE CALIPER - REMOVAL	5-19
REAR DISC BRAKE SHOES - INSTALLATION	5-11
REAR DISC BRAKE SHOES - REMOVAL	5-9
REAR DOOR B-PILLAR DOOR SEAL - INSTALLATION	23-141
REAR DOOR B-PILLAR DOOR SEAL - REMOVAL	23-141
REAR DOOR GLASS RUN WEATHERSTRIP - INSTALLATION	23-141
REAR DOOR GLASS RUN WEATHERSTRIP - REMOVAL	23-141
REAR DOOR INNER BELT WEATHERSTRIP - INSTALLATION	23-142
REAR DOOR INNER BELT WEATHERSTRIP - REMOVAL	23-142
REAR DOOR OPENING WEATHERSTRIP - INSTALLATION, FRONT	23-137
REAR DOOR OPENING WEATHERSTRIP - REMOVAL, FRONT	23-137
REAR DOOR OUTER BELT MOLDING - INSTALLATION	23-142
REAR DOOR OUTER BELT MOLDING - REMOVAL	23-142
REAR DRUM - CLEANING, BRAKE PADS/SHOES	5-13
REAR DRUM - INSPECTION, BRAKE PADS/SHOES	5-13
REAR DRUM - INSTALLATION, BRAKE PADS/SHOES	5-13
REAR DRUM - REMOVAL, BRAKE PADS/SHOES	5-12
REAR FOG LAMP - EXPORT - INSTALLATION	8L-24
REAR FOG LAMP - EXPORT - REMOVAL	8L-24
REAR FOG LAMP UNIT - EXPORT - INSTALLATION	8L-25
REAR FOG LAMP UNIT - EXPORT - REMOVAL	8L-25
REAR INBOARD - INSTALLATION, SEAT BELT	8O-15
REAR INBOARD - REMOVAL, SEAT BELT	8O-15
REAR ISOLATOR BUSHING - ASSEMBLY	2-18
REAR ISOLATOR BUSHING - DISASSEMBLY	2-17
REAR MOUNT - INSTALLATION	9-118,9-201, 9-52
REAR MOUNT - REMOVAL	9-118,9-201,9-52
REAR OIL SEAL RETAINER - INSTALLATION, CRANKSHAFT	9-193
REAR OIL SEAL RETAINER - REMOVAL, CRANKSHAFT	9-193
REAR OUTBOARD - INSTALLATION, SEAT BELT	8O-15
REAR OUTBOARD - REMOVAL, SEAT BELT	8O-15
REAR ROTOR - INSTALLATION	5-36
REAR ROTOR - REMOVAL	5-36
REAR SEAT - DESCRIPTION	23-111
REAR SEAT BELT & RETRACTOR - JR27 ONLY - INSTALLATION	8O-11
REAR SEAT BELT & RETRACTOR - JR27 ONLY - REMOVAL	8O-11
REAR SEAT BELT BUCKLE - JR27 ONLY - INSTALLATION	8O-10
REAR SEAT BELT BUCKLE - JR27 ONLY - REMOVAL	8O-10
REAR SEAT CUSHION COVER - INSTALLATION	23-113
REAR SEAT CUSHION COVER - REMOVAL	23-113
REAR SHELF TRIM PANEL - INSTALLATION	23-88
REAR SHELF TRIM PANEL - REMOVAL	23-88
REAR SUSPENSION - DESCRIPTION	2-32
REAR SUSPENSION - OPERATION	2-32
REAR SUSPENSION CROSSMEMBER - DESCRIPTION	13-10
REAR SUSPENSION CROSSMEMBER - INSTALLATION	13-12
REAR SUSPENSION CROSSMEMBER - REMOVAL	13-10
REAR SUSPENSION FASTENER TORQUE, SPECIFICATIONS	2-33
REAR SUSPENSION, SPECIAL TOOLS	2-33
REAR WHEELHOUSE SPLASH SHIELD - INSTALLATION	23-58
REAR WHEELHOUSE SPLASH SHIELD - REMOVAL	23-58
REAR WINDOW - INSTALLATION, CONVERTIBLE TOP	23-21
REAR WINDOW - REMOVAL, CONVERTIBLE TOP	23-20
REAR WINDOW DEFOGGER GRID LINE REPAIR - STANDARD PROCEDURE	8G-4
REAR WINDOW DEFOGGER GRID LINES - DIAGNOSIS AND TESTING	8G-4
REAR WINDOW DEFOGGER RELAY - DESCRIPTION	8G-2
REAR WINDOW DEFOGGER RELAY - DIAGNOSIS AND TESTING	8G-3
REAR WINDOW DEFOGGER RELAY - INSTALLATION	8G-3
REAR WINDOW DEFOGGER RELAY - OPERATION	8G-2
REAR WINDOW DEFOGGER RELAY - REMOVAL	8G-3
REAR WINDOW DEFOGGER SWITCH - DESCRIPTION	8G-3
REAR WINDOW DEFOGGER SWITCH - DIAGNOSIS AND TESTING	8G-3
REAR WINDOW DEFOGGER SWITCH - OPERATION	8G-3
RECEIVE - PCM INPUT - OPERATION, DATA BUS COMMUNICATION	8E-9
RECEIVER / DRIER - DESCRIPTION	24-49
RECEIVER / DRIER - INSTALLATION	24-49
RECEIVER / DRIER - OPERATION	24-49
RECEIVER / DRIER - REMOVAL	24-49
RECIRCULATION DOOR ACTUATOR - DESCRIPTION	24-25
RECIRCULATION DOOR ACTUATOR - INSTALLATION	24-26
RECIRCULATION DOOR ACTUATOR - OPERATION	24-25
RECIRCULATION DOOR ACTUATOR - REMOVAL	24-26
RECOVERY - STANDARD PROCEDURE, REFRIGERANT	24-10
RECOVERY CONTAINER - 2.0L/2.4L - DESCRIPTION, COOLANT	7-28
RECOVERY CONTAINER - 2.0L/2.4L - INSTALLATION, COOLANT	7-29
RECOVERY CONTAINER - 2.0L/2.4L - OPERATION, COOLANT	7-28
RECOVERY CONTAINER - 2.0L/2.4L - REMOVAL, COOLANT	7-28
REFACING - STANDARD PROCEDURE, VALVE AND VALVE SEAT	9-175
REFERENCES - DESCRIPTION, TORQUE	Intro.-8
REFRIGERANT - DESCRIPTION	24-53
REFRIGERANT - OPERATION	24-53
REFRIGERANT EQUIPMENT - STANDARD PROCEDURE	24-8
REFRIGERANT OIL - DESCRIPTION	24-51
REFRIGERANT OIL - DIAGNOSIS AND TESTING	24-4
REFRIGERANT OIL - OPERATION	24-52
REFRIGERANT OIL LEVEL - STANDARD PROCEDURE	24-52
REFRIGERANT RECOVERY - STANDARD PROCEDURE	24-10
REGULATOR - DESCRIPTION, VOLTAGE	8F-23
REGULATOR - INSTALLATION, FUEL PRESSURE	14-6
REGULATOR - INSTALLATION, WINDOW	23-50
REGULATOR - OPERATION, FUEL PRESSURE	14-6
REGULATOR - OPERATION, VOLTAGE	8F-23
REGULATOR - REMOVAL, FUEL PRESSURE	14-6
REGULATOR - REMOVAL, WINDOW	23-50
REINFORCEMENT - INSTALLATION, REAR BUMPER	13-3
REINFORCEMENT - REMOVAL, REAR BUMPER	13-3
RELAY - DESCRIPTION, A/C COMPRESSOR CLUTCH	24-16
RELAY - DESCRIPTION, AUTO SHUT DOWN	8I-2
RELAY - DESCRIPTION, FUEL PUMP	14-27
RELAY - DESCRIPTION, HORN	8H-4
RELAY - DESCRIPTION, REAR WINDOW DEFOGGER	8G-2
RELAY - DESCRIPTION, STARTER MOTOR	8F-31
RELAY - DESCRIPTION, TRANSMISSION CONTROL	21-236
RELAY - DIAGNOSIS AND TESTING, A/C COMPRESSOR CLUTCH	24-16
RELAY - DIAGNOSIS AND TESTING, HORN	8H-4
RELAY - DIAGNOSIS AND TESTING, REAR WINDOW DEFOGGER	8G-3
RELAY - INSTALLATION, A/C COMPRESSOR CLUTCH	24-17
RELAY - INSTALLATION, REAR WINDOW DEFOGGER	8G-3
RELAY - INSTALLATION, WINDOW DROP	8N-18
RELAY - OPERATION, A/C COMPRESSOR CLUTCH	24-16
RELAY - OPERATION, AUTO SHUT DOWN	8I-2
RELAY - OPERATION, FUEL PUMP	14-27
RELAY - OPERATION, HORN	8H-4
RELAY - OPERATION, REAR WINDOW DEFOGGER	8G-2
RELAY - OPERATION, STARTER MOTOR	8F-31
RELAY - OPERATION, TRANSMISSION CONTROL	21-236
RELAY - REMOVAL, A/C COMPRESSOR CLUTCH	24-17
RELAY - REMOVAL, REAR WINDOW DEFOGGER	8G-3
RELAY - REMOVAL, STARTER MOTOR	8F-31
RELAY - REMOVAL, WINDOW DROP	8N-18
RELEASE BEARING AND LEVER - DESCRIPTION, CLUTCH	6-12
RELEASE BEARING AND LEVER - OPERATION, CLUTCH	6-12
RELEASE CABLE - INSTALLATION, EMERGENCY	23-26

Description	Group-Page
RELEASE CABLE - INSTALLATION, LATCH	23-64
RELEASE CABLE - REMOVAL, EMERGENCY	23-26
RELEASE CABLE - REMOVAL, LATCH	23-64
RELEASE CABLE (2.0L/T350 MODELS) - DESCRIPTION, CLUTCH	6-15
RELEASE CABLE (2.0L/T350 MODELS) - INSTALLATION, CLUTCH	6-16
RELEASE CABLE (2.0L/T350 MODELS) - REMOVAL, CLUTCH	6-15
RELEASE PROCEDURE - STANDARD PROCEDURE, FUEL SYSTEM PRESSURE	14-2
RELEASE SOLENOID - DIAGNOSIS AND TESTING, DECKLID	8N-5
RELEASE SOLENOID - INSTALLATION, DECKLID	8N-5
RELEASE SOLENOID - REMOVAL, DECKLID	8N-5
RELEASE SWITCH - INSTALLATION, DECKLID	8N-5
RELEASE SWITCH - REMOVAL, DECKLID	8N-5
RELIEF TESTING - DIAGNOSIS AND TESTING, COOLING SYSTEM PRESSURE	7-37
RELIEF VALVE - INSTALLATION, OIL PRESSURE	9-209
RELIEF VALVE - REMOVAL, OIL PRESSURE	9-209
REMOTE KEYLESS ENTRY - DIAGNOSIS AND TESTING	8N-3
REMOTE KEYLESS ENTRY MODULE - INSTALLATION	8N-6
REMOTE KEYLESS ENTRY MODULE - REMOVAL	8N-6
REMOTE SWITCHES - DESCRIPTION	8A-7
REMOTE SWITCHES - DIAGNOSIS AND TESTING	8A-8
REMOTE SWITCHES - INSTALLATION	8A-9
REMOTE SWITCHES - OPERATION	8A-8
REMOTE SWITCHES - REMOVAL	8A-9
REMOVE, REMOVAL	23-82
REPAIR - DESCRIPTION, THREADED HOLE	Intro.-5
REPAIR - STANDARD PROCEDURE, INTAKE MANIFOLD VACUUM PORT	9-213
REPAIR - STANDARD PROCEDURE, PLASTIC BODY PANEL	23-3
REPAIR - STANDARD PROCEDURE, REAR WINDOW DEFOGGER GRID LINE	8G-4
REPAIR OF DAMAGED OR WORN THREADS - STANDARD PROCEDURE	9-10, 9-151,9-79
REPAIRING - STANDARD PROCEDURE, TIRE LEAK	22-11
REPEATER LAMP UNIT - EXPORT - INSTALLATION, SIDE	8L-25
REPEATER LAMP UNIT - EXPORT - REMOVAL, SIDE	8L-25
REQUIREMENTS - DESCRIPTION, FUEL	0-5
RESERVOIR - DESCRIPTION, VACUUM	8P-5
RESERVOIR - INSTALLATION, VACUUM	8P-6
RESERVOIR - INSTALLATION, WASHER	8R-4
RESERVOIR - OPERATION, VACUUM	8P-5
RESERVOIR - REMOVAL, VACUUM	8P-5
RESERVOIR - REMOVAL, WASHER	8R-3
RESERVOIR PUMP - INSTALLATION, WASHER	8R-4
RESERVOIR PUMP - REMOVAL, WASHER	8R-4
RESISTANCE, SPECIFICATIONS - SPARK PLUG CABLE	8I-2
RESISTANCE TEST - DIAGNOSIS AND TESTING, FEED CIRCUIT	8F-28
RESISTOR - DESCRIPTION, BLOWER MOTOR	24-26
RESISTOR - DIAGNOSIS AND TESTING-BLOWER MOTOR RESISTOR, BLOWER MOTOR	24-26
RESISTOR - INSTALLATION, BLOWER MOTOR	24-27
RESISTOR - OPERATION, BLOWER MOTOR	24-26
RESISTOR - REMOVAL, BLOWER MOTOR	24-27
RESISTOR, BLOWER MOTOR RESISTOR - DIAGNOSIS AND TESTING-BLOWER MOTOR	24-26
RESONATOR PIPE - 2.7L - INSTALLATION, EXHAUST PIPE - CROSS-UNDER PIPE TO	11-12
RESONATOR PIPE - 2.7L - REMOVAL, EXHAUST PIPE - CROSS-UNDER PIPE TO	11-12
RESONATOR/PIPE ASSEMBLY - INSTALLATION	11-13
RESONATOR/PIPE ASSEMBLY - REMOVAL	11-13
RESTRAINT ANCHOR - DESCRIPTION, CHILD	8O-4
RESTRAINT ANCHOR - INSTALLATION, CHILD	8O-4
RESTRAINT ANCHOR - OPERATION, CHILD	8O-4
RESTRAINT ANCHOR - REMOVAL, CHILD	8O-4
RESTRAINT CONTROLLER - DESCRIPTION, OCCUPANT	8O-9
RESTRAINT CONTROLLER - INSTALLATION, OCCUPANT	8O-9
RESTRAINT CONTROLLER - OPERATION, OCCUPANT	8O-9
RESTRAINT CONTROLLER - REMOVAL, OCCUPANT	8O-9
RESTRICTION CHECK - DIAGNOSIS AND TESTING, EXHAUST SYSTEM	11-4
RETAINER - INSTALLATION, CRANKSHAFT REAR OIL SEAL	9-193
RETAINER - REMOVAL, CRANKSHAFT REAR OIL SEAL	9-193
RETAINER AND MOLDING - INSTALLATION, A-PILLAR WEATHERSTRIP	23-135
RETAINER AND MOLDING - REMOVAL, A-PILLAR WEATHERSTRIP	23-135
RETAINER/MOLING - INSTALLATION, HEADER WEATHERSTRIP	23-140
RETAINER/MOLING - REMOVAL, HEADER WEATHERSTRIP	23-140
RETRACTOR - FRONT OUTBOARD - INSTALLATION, SEAT BELT	8O-16
RETRACTOR - FRONT OUTBOARD - REMOVAL, SEAT BELT	8O-15
RETRACTOR - JR27 ONLY - INSTALLATION, FRONT SEAT BELT	8O-9
RETRACTOR - JR27 ONLY - INSTALLATION, REAR SEAT BELT	8O-11
RETRACTOR - JR27 ONLY - REMOVAL, FRONT SEAT BELT	8O-8
RETRACTOR - JR27 ONLY - REMOVAL, REAR SEAT BELT	8O-11
RETRACTOR - REAR CENTER - INSTALLATION, SEAT BELT	8O-16
RETRACTOR - REAR CENTER - REMOVAL, SEAT BELT	8O-16
RETURN - INSTALLATION, HOSE	19-37
RETURN - PCM INPUT - OPERATION, SENSOR	8E-9
RETURN - REMOVAL, HOSE	19-35
RIGHT - INSTALLATION, CYLINDER HEAD COVER	9-175
RIGHT - REMOVAL, CYLINDER HEAD COVER	9-175
RIGHT FRONT WHEELHOUSE SPLASH SHIELD - INSTALLATION	23-58
RIGHT FRONT WHEELHOUSE SPLASH SHIELD - REMOVAL	23-58
RIGHT INSTRUMENT PANEL TRIM BEZEL - INSTALLATION	23-75
RIGHT INSTRUMENT PANEL TRIM BEZEL - REMOVAL	23-75
RIGHT LOWER INSTRUMENT PANEL TRIM - INSTALLATION	23-75
RIGHT LOWER INSTRUMENT PANEL TRIM - REMOVAL	23-75
RIGHT LOWER SILENCER PANEL - INSTALLATION	23-74
RIGHT LOWER SILENCER PANEL - REMOVAL	23-74
RIGHT MOUNT - INSTALLATION	9-119,9-201, 9-51
RIGHT MOUNT - REMOVAL	9-119,9-201,9-51
RING - FITTING - STANDARD PROCEDURE, PISTON	9-47
RING, FITTING - PISTON	9-114
RING FITTING - STANDARD PROCEDURE, PISTON	9-197
RINGS - INSTALLATION, PISTON	9-197,9-48
RINGS - REMOVAL, PISTON	9-197,9-48
RKE TRANSMITTER PROGRAMMING - STANDARD PROCEDURE	8N-5
ROAD TEST - DIAGNOSIS AND TESTING	21-113
ROAD TEST - DIAGNOSIS AND TESTING, INSPECTION	5-52
ROCKER ARMS - DESCRIPTION	9-182
ROCKER ARMS - INSPECTION	9-101,9-183,9-34
ROCKER ARMS - INSTALLATION	9-101,9-183, 9-34
ROCKER ARMS - REMOVAL	9-100,9-183,9-33
ROD - DESCRIPTION, PISTON & CONNECTING	9-111,9-194,9-44
ROD - INSTALLATION, PISTON & CONNECTING	9-113,9-195,9-46
ROD - INSTALLATION, PROP	23-65
ROD - OUTER - INSTALLATION, TIE	19-28
ROD - OUTER - REMOVAL, TIE	19-28
ROD - REMOVAL, PISTON & CONNECTING	9-112,9-194,9-44
ROD - REMOVAL, PROP	23-65
ROD AND BEARING FITTING - STANDARD PROCEDURE, CONNECTING	9-186
ROD, FITTING - CONNECTING	9-113,9-47
ROTATION - STANDARD PROCEDURE, TIRE AND WHEEL	22-7
ROTOR - DIAGNOSIS AND TESTING, BRAKE	5-32
ROTOR - INSTALLATION, FRONT	5-36
ROTOR - INSTALLATION, REAR	5-36
ROTOR - REMOVAL, FRONT	5-36
ROTOR - REMOVAL, REAR	5-36
ROTOR MACHINING - STANDARD PROCEDURE, BRAKE	5-35
ROUTINE - COOLANT LEVEL CHECK	7-23
RUN WEATHERSTRIP - INSTALLATION, FRONT DOOR GLASS	23-138
RUN WEATHERSTRIP - INSTALLATION, REAR DOOR GLASS	23-141
RUN WEATHERSTRIP - REMOVAL, FRONT DOOR GLASS	23-137
RUN WEATHERSTRIP - REMOVAL, REAR DOOR GLASS	23-141
RUNOUT - DIAGNOSIS AND TESTING, CLUTCH COVER AND DISC	6-5
RUNOUT, SPECIFICATIONS - TONE WHEEL	5-54
SAFETY CERTIFICATION LABEL - DESCRIPTION, VEHICLE	Intro.-10
SAFETY PRECAUTIONS AND WARNINGS, WARNING	23-1
SAFETY PRECAUTIONS, WARNING - WINDSHIELD	23-118
SANDING/BUFFING AND POLISHING - DESCRIPTION, FINESSE	23-94
SATELLITE ACCELERATION SENSOR - DESCRIPTION	8O-11
SATELLITE ACCELERATION SENSOR - INSTALLATION	8O-12
SATELLITE ACCELERATION SENSOR - OPERATION	8O-11
SATELLITE ACCELERATION SENSOR - REMOVAL	8O-11
SBEC CONTROLLER - INSTALLATION	8E-13
SBEC CONTROLLER - OPERATION, 8-VOLT SUPPLY - PCM OUTPUT	8E-10
SBEC CONTROLLER - REMOVAL	8E-11
SCHEMATICS AND DIAGRAMS - 41TE TRANSAXLE HYDRAULIC SCHEMATICS	21-159
SCHEMATICS AND DIAGRAMS - SPECIAL TOOLS	21-173
SCHEMATICS, SCHEMATICS AND DIAGRAMS - 41TE TRANSAXLE HYDRAULIC	21-159
SEAL - ASSEMBLY, CALIPER PISTON	5-17,5-21
SEAL - DISASSEMBLY, CALIPER PISTON	5-16, 5-20
SEAL - FRONT - INSTALLATION, CRANKSHAFT OIL	9-108,9-192,9-42
SEAL - FRONT - REMOVAL, CRANKSHAFT OIL	9-108,9-191,9-41
SEAL - INSTALLATION, A-PILLAR	23-134
SEAL - INSTALLATION, REAR DOOR B-PILLAR DOOR	23-141
SEAL - INSTALLATION, SUNROOF GLASS PANEL	23-128
SEAL - OIL PUMP - INSTALLATION	21-217

Description	Group-Page
SEAL - OIL PUMP - REMOVAL	21-217
SEAL - REAR - INSTALLATION, CRANKSHAFT OIL	9-109,9-192,9-43
SEAL - REAR - REMOVAL, CRANKSHAFT OIL	9-109,9-192,9-43
SEAL - REMOVAL, A-PILLAR	23-134
SEAL - REMOVAL, REAR DOOR B-PILLAR DOOR	23-141
SEAL - REMOVAL, SUNROOF GLASS PANEL	23-128
SEAL BOOT - INSTALLATION, LOWER BALL JOINT	2-12
SEAL BOOT - REMOVAL, LOWER BALL JOINT	2-11
SEAL RETAINER - INSTALLATION, CRANKSHAFT REAR OIL	9-193
SEAL RETAINER - REMOVAL, CRANKSHAFT REAR OIL	9-193
SEALER LOCATIONS - JR-27 AND JR-41 - SPECIFICATIONS	23-152
SEALER LOCATIONS - JR-27 ONLY - SPECIFICATIONS	23-156
SEALER LOCATIONS - JR-41 ONLY - SPECIFICATIONS	23-172
SEALERS - STANDARD PROCEDURE, FORM-IN-PLACE GASKETS	9-11,9-152,9-80
SEALS - INSTALLATION, AXLE	21-72
SEAL(S) - INSTALLATION, CAMSHAFT OIL	9-28,9-96
SEALS - INSTALLATION, SHIFT SHAFT	21-40
SEALS - INSTALLATION, VALVE STEM	9-181
SEALS - REMOVAL, AXLE	21-72
SEAL(S) - REMOVAL, CAMSHAFT OIL	9-28,9-95
SEALS - REMOVAL, SHIFT SHAFT	21-40
SEALS - REMOVAL, VALVE STEM	9-181
SEAT - DESCRIPTION, REAR	23-111
SEAT ADJUSTER - POWER - INSTALLATION, FRONT	23-115
SEAT ADJUSTER - POWER - REMOVAL, FRONT	23-115
SEAT BACK LATCH STRIKER - INSTALLATION	23-116
SEAT BACK LATCH STRIKER - REMOVAL	23-116
SEAT BELT - REAR INBOARD - INSTALLATION	8O-15
SEAT BELT - REAR INBOARD - REMOVAL	8O-15
SEAT BELT - REAR OUTBOARD - INSTALLATION	8O-15
SEAT BELT - REAR OUTBOARD - REMOVAL	8O-15
SEAT BELT & RETRACTOR - FRONT OUTBOARD - INSTALLATION	8O-16
SEAT BELT & RETRACTOR - FRONT OUTBOARD - REMOVAL	8O-15
SEAT BELT & RETRACTOR - JR27 ONLY - INSTALLATION, FRONT	8O-9
SEAT BELT & RETRACTOR - JR27 ONLY - INSTALLATION, REAR	8O-11
SEAT BELT & RETRACTOR - JR27 ONLY - REMOVAL, FRONT	8O-8
SEAT BELT & RETRACTOR - JR27 ONLY - REMOVAL, REAR	8O-11
SEAT BELT & RETRACTOR - REAR CENTER - INSTALLATION	8O-16
SEAT BELT & RETRACTOR - REAR CENTER - REMOVAL	8O-16
SEAT BELT BUCKLE - JR27 ONLY - INSTALLATION, FRONT	8O-8
SEAT BELT BUCKLE - JR27 ONLY - INSTALLATION, REAR	8O-10
SEAT BELT BUCKLE - JR27 ONLY - REMOVAL, FRONT	8O-8
SEAT BELT BUCKLE - JR27 ONLY - REMOVAL, REAR	8O-10
SEAT BELT CONTROL TIMER MODULE - DIAGNOSIS AND TESTING	8O-12
SEAT BELT CONTROL TIMER MODULE - JR27 - EXPORT - DESCRIPTION	8O-12
SEAT BELT CONTROL TIMER MODULE - JR27 - EXPORT - INSTALLATION	8O-14
SEAT BELT CONTROL TIMER MODULE - JR27 - EXPORT - OPERATION	8O-12
SEAT BELT CONTROL TIMER MODULE - JR27 - EXPORT - REMOVAL	8O-14
SEAT BELT HEIGHT ADJUSTER - INSTALLATION	8O-14
SEAT BELT HEIGHT ADJUSTER - REMOVAL	8O-14
SEAT BELT TENSIONER - DESCRIPTION	8O-16
SEAT BELT TENSIONER - OPERATION	8O-17
SEAT BELTS - DIAGNOSIS AND TESTING, FASTEN	8B-3
SEAT CUSHION COVER - INSTALLATION, FRONT	23-110
SEAT CUSHION COVER - INSTALLATION, REAR	23-113
SEAT CUSHION COVER - REMOVAL, FRONT	23-110
SEAT CUSHION COVER - REMOVAL, REAR	23-113
SEAT ELEMENT - DESCRIPTION, HEATED	8G-6
SEAT ELEMENT - DIAGNOSIS AND TESTING, HEATED	8G-7
SEAT ELEMENT - INSTALLATION, HEATED	8G-7
SEAT ELEMENT - OPERATION, HEATED	8G-6
SEAT ELEMENT - REMOVAL, HEATED	8G-7
SEAT MODULE - DESCRIPTION, HEATED	8E-5
SEAT MODULE - DIAGNOSIS AND TESTING, HEATED	8E-5
SEAT MODULE - INSTALLATION, HEATED	8E-6
SEAT MODULE - OPERATION, HEATED	8E-5
SEAT MODULE - REMOVAL, HEATED	8E-6
SEAT REFACING - STANDARD PROCEDURE, VALVE AND VALVE	9-175
SEAT SWITCH - DESCRIPTION, DRIVER	8N-11
SEAT SWITCH - DESCRIPTION, HEATED	8G-8
SEAT SWITCH - DIAGNOSIS AND TESTING, DRIVER	8N-12
SEAT SWITCH - DIAGNOSIS AND TESTING, HEATED	8G-8
SEAT SWITCH - INSTALLATION, DRIVER	8N-14
SEAT SWITCH - INSTALLATION, HEATED	8G-9
SEAT SWITCH - OPERATION, DRIVER	8N-11
SEAT SWITCH - OPERATION, HEATED	8G-8
SEAT SWITCH - REMOVAL, DRIVER	8N-14
SEAT SWITCH - REMOVAL, HEATED	8G-9
SEAT SYSTEM - DESCRIPTION, HEATED	8G-5
SEAT SYSTEM - DESCRIPTION, POWER	8N-10
SEAT SYSTEM - DIAGNOSIS AND TESTING, HEATED	8G-6
SEAT SYSTEM - DIAGNOSIS AND TESTING, POWER	8N-11
SEAT SYSTEM - OPERATION, HEATED	8G-5
SEAT SYSTEM - OPERATION, POWER	8N-11
SEAT TRACK - DESCRIPTION, POWER	8N-14
SEAT TRACK - DIAGNOSIS AND TESTING, POWER	8N-15
SEAT TRACK - INSTALLATION, POWER	8N-16
SEAT TRACK - OPERATION, POWER	8N-14
SEAT TRACK - REMOVAL, POWER	8N-16
SEATS - CLEANING, INTAKE/EXHAUST VALVES	9-100,9-33
SEATS - DESCRIPTION, INTAKE/ EXHAUST VALVES	9-100,9-175,9-33
SEATS - INSPECTION, INTAKE/EXHAUST VALVES	9-177
SEATS - INSTALLATION, INTAKE/ EXHAUST VALVES	9-177
SEATS - OPERATION, INTAKE/EXHAUST VALVES	9-100,9-33
SEATS - REMOVAL, INTAKE/EXHAUST VALVES	9-177
SECONDARY SILL WEATHERSTRIP - INSTALLATION	23-143
SECONDARY SILL WEATHERSTRIP - REMOVAL	23-143
SECTION IDENTIFICATION AND INFORMATION - DESCRIPTION	8W-01-6
SECURITY - DESCRIPTION, VEHICLE THEFT	8Q-1
SECURITY - OPERATION, VEHICLE THEFT	8Q-1
SECURITY SYSTEM - DIAGNOSIS AND TESTING, VEHICLE THEFT	8Q-3
SELECTION, ADJUSTMENTS - DIFFERENTIAL BEARING PRELOAD ADJUSTMENT / SHIM	21-25
SELECTOR SHAFT - INSTALLATION, SHIFT	21-39
SELECTOR SHAFT - REMOVAL, SHIFT	21-39
SELECTOR SHAFT BUSHING - INSTALLATION, SHIFT	21-39
SELECTOR SHAFT BUSHING - REMOVAL, SHIFT	21-39
SELF DIAGNOSTICS - DIAGNOSIS AND TESTING	24-5
SENDING UNIT / SENSOR - DESCRIPTION, FUEL LEVEL	14-4
SENDING UNIT / SENSOR - INSTALLATION, FUEL LEVEL	14-5
SENDING UNIT / SENSOR - OPERATION, FUEL LEVEL	14-4
SENDING UNIT / SENSOR - REMOVAL, FUEL LEVEL	14-5
SENSE - PCM INPUT - OPERATION, IGNITION	8E-9
SENSITIVE DEVICES - STANDARD PROCEDURE, ELECTROSTATIC DISCHARGE (ESD)	8W-01-8
SENSOR - DESCRIPTION, AMBIENT TEMP	24-23
SENSOR - DESCRIPTION, CAMSHAFT POSITION	8I-3
SENSOR - DESCRIPTION, CRANKSHAFT POSITION	14-22
SENSOR - DESCRIPTION, ENGINE COOLANT TEMPERATURE	7-31
SENSOR - DESCRIPTION, ENGINE SPEED	14-24
SENSOR - DESCRIPTION, EVAPORATOR TEMPERATURE	24-19
SENSOR - DESCRIPTION, FUEL LEVEL SENDING UNIT	14-4
SENSOR - DESCRIPTION, IN-CAR TEMPERATURE	24-21
SENSOR - DESCRIPTION, INLET AIR TEMPERATURE	14-28
SENSOR - DESCRIPTION, KNOCK	8I-6
SENSOR - DESCRIPTION, MAP	14-29
SENSOR - DESCRIPTION, O2	14-31
SENSOR - DESCRIPTION, SATELLITE ACCELERATION	8O-11
SENSOR - DESCRIPTION, SUN	24-22
SENSOR - DESCRIPTION, THROTTLE POSITION	14-38
SENSOR - DESCRIPTION, TRANSMISSION RANGE	21-237
SENSOR - DIAGNOSIS AND TESTING, SUN	24-22
SENSOR - INPUT - DESCRIPTION, SPEED	21-226
SENSOR - INPUT - INSTALLATION, SPEED	21-228
SENSOR - INPUT - OPERATION, SPEED	21-227
SENSOR - INPUT - REMOVAL, SPEED	21-227
SENSOR - INSTALLATION, AMBIENT TEMP	24-23
SENSOR - INSTALLATION, ENGINE COOLANT TEMPERATURE	7-32
SENSOR - INSTALLATION, EVAPORATOR TEMPERATURE	24-20
SENSOR - INSTALLATION, FRONT WHEEL SPEED	5-55
SENSOR - INSTALLATION, FUEL LEVEL SENDING UNIT	14-5
SENSOR - INSTALLATION, SATELLITE ACCELERATION	8O-12
SENSOR - INSTALLATION, SUN	24-23
SENSOR - INSTALLATION, TRANSMISSION RANGE	21-238
SENSOR - OPERATION, AMBIENT TEMP	24-23
SENSOR - OPERATION, CAMSHAFT POSITION	8I-3
SENSOR - OPERATION, CRANKSHAFT POSITION	14-22
SENSOR - OPERATION, ENGINE COOLANT TEMPERATURE	7-31
SENSOR - OPERATION, ENGINE SPEED	14-25
SENSOR - OPERATION, EVAPORATOR TEMPERATURE	24-20
SENSOR - OPERATION, FUEL LEVEL SENDING UNIT	14-4
SENSOR - OPERATION, IN-CAR TEMPERATURE	24-21
SENSOR - OPERATION, INLET AIR TEMPERATURE	14-28
SENSOR - OPERATION, KNOCK	8I-6
SENSOR - OPERATION, MAP	14-29
SENSOR - OPERATION, O2	14-31
SENSOR - OPERATION, SATELLITE ACCELERATION	8O-11
SENSOR - OPERATION, SUN	24-22
SENSOR - OPERATION, THROTTLE POSITION	14-38

Description	Group-Page
SENSOR - OPERATION, TRANSMISSION RANGE	21-237
SENSOR - OUTPUT - DESCRIPTION, SPEED	21-228
SENSOR - OUTPUT - INSTALLATION, SPEED	21-230
SENSOR - OUTPUT - OPERATION, SPEED	21-229
SENSOR - OUTPUT - REMOVAL, SPEED	21-229
SENSOR - REMOVAL, AMBIENT TEMP	24-23
SENSOR - REMOVAL, ENGINE COOLANT TEMPERATURE	7-31
SENSOR - REMOVAL, EVAPORATOR TEMPERATURE	24-20
SENSOR - REMOVAL, FRONT WHEEL SPEED	5-54
SENSOR - REMOVAL, FUEL LEVEL SENDING UNIT	14-5
SENSOR - REMOVAL, IN-CAR TEMPERATURE	24-22
SENSOR - REMOVAL, SATELLITE ACCELERATION	8O-11
SENSOR - REMOVAL, SUN	24-23
SENSOR - REMOVAL, TRANSMISSION RANGE	21-238
SENSOR AIR GAP, SPECIFICATIONS - WHEEL SPEED	5-54
SENSOR ASPIRATOR MOTOR - DIAGNOSIS AND TESTING, IN-CAR	24-21
SENSOR, DESCRIPTION - VEHICLE SPEED	21-41
SENSOR RETURN - PCM INPUT - OPERATION	8E-9
SENSOR/SWITCH - INSTALLATION, OIL PRESSURE	9-124,9-57
SENSOR/SWITCH - REMOVAL, OIL PRESSURE	9-124,9-57
SENTRY KEY IMMOBILIZER MODULE - DESCRIPTION	8E-13
SENTRY KEY IMMOBILIZER MODULE - INSTALLATION	8E-14
SENTRY KEY IMMOBILIZER MODULE - OPERATION	8E-14
SENTRY KEY IMMOBILIZER MODULE - REMOVAL	8E-14
SENTRY KEY IMMOBILIZER SYSTEM - DIAGNOSIS AND TESTING	8Q-2
SERVO - DESCRIPTION	8P-3
SERVO - INSTALLATION	8P-4
SERVO - OPERATION	8P-3
SERVO - REMOVAL	8P-4
SETTING - STANDARD PROCEDURE, PINION FACTOR	8E-10,8E-17
SEVERAL LOADS - STANDARD PROCEDURE, TESTING FOR A SHORT TO GROUND ON FUSES POWERING	8W-01-10
SHAFT - ASSEMBLY, INPUT	21-34,21-89
SHAFT - ASSEMBLY, INTERMEDIATE	21-100
SHAFT - DESCRIPTION, HALF	3-1
SHAFT - DESCRIPTION, INPUT	21-86
SHAFT - DESCRIPTION, INTERMEDIATE	19-17
SHAFT - DESCRIPTION, INTERMEDIATE	21-93
SHAFT - DESCRIPTION, SHIFT FORK	21-107
SHAFT - DIAGNOSIS AND TESTING, STEERING COLUMN INTERMEDIATE	19-17
SHAFT - DISASSEMBLY, INPUT	21-31,21-86
SHAFT - DISASSEMBLY, INTERMEDIATE	21-94
SHAFT - DISASSEMBLY, OUTPUT	21-38
SHAFT - INSTALLATION, INTERMEDIATE	19-18
SHAFT - INSTALLATION, SHIFT CROSSOVER	21-39
SHAFT - INSTALLATION, SHIFT SELECTOR	21-39
SHAFT - OPERATION, HALF	3-1
SHAFT - OPERATION, INTERMEDIATE	19-17
SHAFT - REMOVAL, INTERMEDIATE	19-17
SHAFT - REMOVAL, SHIFT CROSSOVER	21-38
SHAFT - REMOVAL, SHIFT SELECTOR	21-39
SHAFT BUSHING - INSTALLATION, SHIFT SELECTOR	21-39
SHAFT BUSHING - REMOVAL, SHIFT SELECTOR	21-39
SHAFT SEALS - INSTALLATION, SHIFT	21-40
SHAFT SEALS - REMOVAL, SHIFT	21-40
SHAFTS AND CARRIER ASSEMBLY - DESCRIPTION, BALANCE	9-138
SHAFTS AND CARRIER ASSEMBLY - INSTALLATION, BALANCE	9-140
SHAFTS AND CARRIER ASSEMBLY - OPERATION, BALANCE	9-138
SHAFTS AND CARRIER ASSEMBLY - REMOVAL, BALANCE	9-139
SHELF TRIM PANEL - INSTALLATION, REAR	23-88
SHELF TRIM PANEL - REMOVAL, REAR	23-88
SHIELD - INSTALLATION, ACCESSORY DRIVE BELT SPLASH	23-52
SHIELD - INSTALLATION, BATTERY SPLASH	23-53
SHIELD - INSTALLATION, KICK	23-76
SHIELD - INSTALLATION, LEFT FRONT WHEELHOUSE SPLASH	23-57
SHIELD - INSTALLATION, REAR WHEELHOUSE SPLASH	23-58
SHIELD - INSTALLATION, RIGHT FRONT WHEELHOUSE SPLASH	23-58
SHIELD - REMOVAL, ACCESSORY DRIVE BELT SPLASH	23-52
SHIELD - REMOVAL, BATTERY SPLASH	23-53
SHIELD - REMOVAL, KICK	23-76
SHIELD - REMOVAL, LEFT FRONT WHEELHOUSE SPLASH	23-57
SHIELD - REMOVAL, REAR WHEELHOUSE SPLASH	23-58
SHIELD - REMOVAL, RIGHT FRONT WHEELHOUSE SPLASH	23-58
SHIELDS - DESCRIPTION, HEAT	11-14
SHIELDS - OPERATION, HEAT	11-14
SHIFT BOOT - INSTALLATION	23-90
SHIFT BOOT - REMOVAL	23-90
SHIFT CABLE - INSTALLATION, GEAR	21-28, 21-84
SHIFT CABLE - REMOVAL, GEAR	21-27,21-83
SHIFT COVER - DESCRIPTION	21-107
SHIFT CROSSOVER SHAFT - INSTALLATION	21-39
SHIFT CROSSOVER SHAFT - REMOVAL	21-38
SHIFT FORK AND SHAFT - DESCRIPTION	21-107
SHIFT INTERLOCK CABLE - DESCRIPTION	21-217
SHIFT INTERLOCK CABLE - INSTALLATION	21-220
SHIFT INTERLOCK CABLE - OPERATION	21-217
SHIFT INTERLOCK CABLE - REMOVAL	21-218
SHIFT INTERLOCK CABLE VERIFICATION AND ADJUSTMENT, ADJUSTMENTS - BRAKE/TRANSMISSION	21-221
SHIFT INTERLOCK MECHANISM - INSTALLATION	21-223
SHIFT INTERLOCK MECHANISM - REMOVAL	21-223
SHIFT MECHANISM - INSTALLATION, GEAR	21-29,21-85
SHIFT MECHANISM - REMOVAL, GEAR	21-29, 21-85
SHIFT RAIL BUSHINGS - INSTALLATION	21-39
SHIFT RAIL BUSHINGS - REMOVAL	21-39
SHIFT SELECTOR SHAFT - INSTALLATION	21-39
SHIFT SELECTOR SHAFT - REMOVAL	21-39
SHIFT SELECTOR SHAFT BUSHING - INSTALLATION	21-39
SHIFT SELECTOR SHAFT BUSHING - REMOVAL	21-39
SHIFT SHAFT SEALS - INSTALLATION	21-40
SHIFT SHAFT SEALS - REMOVAL	21-40
SHIM SELECTION, ADJUSTMENTS - DIFFERENTIAL BEARING PRELOAD ADJUSTMENT	21-25
SHOCK ASSEMBLY - ASSEMBLY	2-26,2-42
SHOCK ASSEMBLY - DESCRIPTION	2-21,2-40
SHOCK ASSEMBLY - DIAGNOSIS AND TESTING	2-40
SHOCK ASSEMBLY - DISASSEMBLY	2-24,2-41
SHOCK ASSEMBLY - INSTALLATION	2-28,2-43
SHOCK ASSEMBLY - OPERATION	2-22,2-40
SHOCK ASSEMBLY - REMOVAL	2-22,2-40
SHOCK ASSEMBLY (FRONT) - DIAGNOSIS AND TESTING	2-22
SHOES - ADJUSTMENT, DRUM BRAKE	5-14
SHOES - CLEANING, DISC BRAKE	5-11,5-8
SHOES - INSPECTION, DISC BRAKE	5-11,5-8
SHOES - INSTALLATION, FRONT DISC BRAKE	5-8
SHOES - INSTALLATION, REAR DISC BRAKE	5-11
SHOES - PARKING BRAKE - INSTALLATION	5-47
SHOES - PARKING BRAKE - REMOVAL	5-46
SHOES - REMOVAL, FRONT DISC BRAKE	5-6
SHOES - REMOVAL, REAR DISC BRAKE	5-9
SHORT TO GROUND - STANDARD PROCEDURE, TESTING FOR A	8W-01-9
SHORT TO GROUND ON FUSES POWERING SEVERAL LOADS - STANDARD PROCEDURE, TESTING FOR A	8W-01-10
SHUT DOWN RELAY - DESCRIPTION, AUTO	8I-2
SHUT DOWN RELAY - OPERATION, AUTO	8I-2
SIDE GEAR END PLAY - ADJUSTMENT, DIFFERENTIAL	21-82
SIDE MOLDINGS - INSTALLATION, BODY	23-53
SIDE MOLDINGS - REMOVAL, BODY	23-53
SIDE RAIL WEATHERSTRIP - INSTALLATION	23-144
SIDE RAIL WEATHERSTRIP - REMOVAL	23-143
SIDE REPEATER LAMP UNIT - EXPORT - INSTALLATION	8L-25
SIDE REPEATER LAMP UNIT - EXPORT - REMOVAL	8L-25
SIDE VIEW MIRROR - INSTALLATION	23-59
SIDE VIEW MIRROR - REMOVAL	23-59
SIDE VIEW MIRROR FLAG/DOOR GLASS CHANNEL - INSTALLATION	23-38
SIDE VIEW MIRROR FLAG/DOOR GLASS CHANNEL - REMOVAL	23-38
SIDE VIEW MIRROR GLASS - INSTALLATION	23-59
SIDE VIEW MIRROR GLASS - REMOVAL	23-59
SIDEVIEW MIRROR - REMOVAL	8N-9
SIGNAL LAMP - INSTALLATION, PARK/TURN	8L-24
SIGNAL LAMP - REMOVAL, PARK/TURN	8L-24
SILENCER PANEL - INSTALLATION, LEFT LOWER INSTRUMENT	23-74
SILENCER PANEL - INSTALLATION, RIGHT LOWER	23-74
SILENCER PANEL - REMOVAL, LEFT LOWER INSTRUMENT	23-74
SILENCER PANEL - REMOVAL, RIGHT LOWER	23-74
SILL TRIM PANEL - INSTALLATION, DOOR	23-82
SILL TRIM PANEL - REMOVAL, DOOR	23-82
SILL WEATHERSTRIP - INSTALLATION, SECONDARY	23-143
SILL WEATHERSTRIP - REMOVAL, SECONDARY	23-143
SLAVE CYLINDER (2.7L/T850 MODELS) - DESCRIPTION, CLUTCH	6-16
SLAVE CYLINDER (2.7L/T850 MODELS) - INSTALLATION, CLUTCH	6-17
SLAVE CYLINDER (2.7L/T850 MODELS) - OPERATION, CLUTCH	6-16
SLAVE CYLINDER (2.7L/T850 MODELS) - REMOVAL, CLUTCH	6-16
SLEEVE - INSTALLATION, INPUT BEARING	21-30
SLEEVE - REMOVAL, INPUT BEARING	21-30
SOLENOID - DIAGNOSIS AND TESTING, DECKLID RELEASE	8N-5
SOLENOID - INSTALLATION, DECKLID RELEASE	8N-5
SOLENOID - INSTALLATION, EVAP/PURGE	25-15
SOLENOID - OPERATION, EVAP/PURGE	25-15
SOLENOID - OPERATION, STARTER	8F-31
SOLENOID - REMOVAL, DECKLID RELEASE	8N-5
SOLENOID - REMOVAL, EVAP/PURGE	25-15
SOLENOID/PRESSURE SWITCH ASSY - DESCRIPTION	21-223
SOLENOID/PRESSURE SWITCH ASSY - INSTALLATION	21-226
SOLENOID/PRESSURE SWITCH ASSY - OPERATION	21-224
SOLENOID/PRESSURE SWITCH ASSY - REMOVAL	21-225
SPARE TIRE (TEMPORARY) - DESCRIPTION	22-9
SPARK PLUG CABLE - DESCRIPTION	8I-8
SPARK PLUG CABLE RESISTANCE, SPECIFICATIONS	8I-2

Description	Group-Page
SPARK PLUG, SPECIFICATIONS	8I-2
SPEAKER - DESCRIPTION	8A-11
SPEAKER - DIAGNOSIS AND TESTING	8A-11
SPEAKER - INSTALLATION	8A-13
SPEAKER - OPERATION	8A-11
SPEAKER - REMOVAL	8A-12
SPEED CONTROL, DESCRIPTION - INTERACTIVE	8P-1
SPEED OPERATION - STANDARD PROCEDURE, TIRE PRESSURE FOR HIGH	22-11
SPEED SENSOR - DESCRIPTION, ENGINE	14-24
SPEED SENSOR - INPUT - DESCRIPTION	21-226
SPEED SENSOR - INPUT - INSTALLATION	21-228
SPEED SENSOR - INPUT - OPERATION	21-227
SPEED SENSOR - INPUT - REMOVAL	21-227
SPEED SENSOR - INSTALLATION, FRONT WHEEL	5-55
SPEED SENSOR - OPERATION, ENGINE	14-25
SPEED SENSOR - OUTPUT - DESCRIPTION	21-228
SPEED SENSOR - OUTPUT - INSTALLATION	21-230
SPEED SENSOR - OUTPUT - OPERATION	21-229
SPEED SENSOR - OUTPUT - REMOVAL	21-229
SPEED SENSOR - REMOVAL, FRONT WHEEL	5-54
SPEED SENSOR AIR GAP, SPECIFICATIONS - WHEEL	5-54
SPEED SENSOR, DESCRIPTION - VEHICLE	21-41
SPLASH SHIELD - INSTALLATION, ACCESSORY DRIVE BELT	23-52
SPLASH SHIELD - INSTALLATION, BATTERY	23-53
SPLASH SHIELD - INSTALLATION, LEFT FRONT WHEELHOUSE	23-57
SPLASH SHIELD - INSTALLATION, REAR WHEELHOUSE	23-58
SPLASH SHIELD - INSTALLATION, RIGHT FRONT WHEELHOUSE	23-58
SPLASH SHIELD - REMOVAL, ACCESSORY DRIVE BELT	23-52
SPLASH SHIELD - REMOVAL, BATTERY	23-53
SPLASH SHIELD - REMOVAL, LEFT FRONT WHEELHOUSE	23-57
SPLASH SHIELD - REMOVAL, REAR WHEELHOUSE	23-58
SPLASH SHIELD - REMOVAL, RIGHT FRONT WHEELHOUSE	23-58
SPLICE INFORMATION - DESCRIPTION, CONNECTOR, GROUND	8W-01-7
SPLICING - STANDARD PROCEDURE, WIRE	8W-01-15
SPRING - DESCRIPTION, CLOCK	8O-5
SPRING - INSTALLATION, CLOCK	8O-6
SPRING - OPERATION, CLOCK	8O-5
SPRING - REMOVAL, CLOCK	8O-5
SPRING CENTERING - STANDARD PROCEDURE, CLOCK	8O-5
SPRINGS - DESCRIPTION, VALVE	9-178
SPROCKET - INSTALLATION, CRANKSHAFT	9-134,9-226,9-68
SPROCKET - REMOVAL, CRANKSHAFT	9-133, 9-222,9-67
SPROCKETS - INSTALLATION, CAMSHAFT	9-134,9-68
SPROCKETS - REMOVAL, CAMSHAFT	9-133
SPROCKET(S) - REMOVAL, CAMSHAFT	9-67
STABILIZER - INSTALLATION, DOOR GLASS INNER BELT	23-34
STABILIZER - REMOVAL, DOOR GLASS INNER BELT	23-34
STABILIZER BAR - DESCRIPTION	2-28,2-43
STABILIZER BAR - DIAGNOSIS AND TESTING	2-29,2-43
STABILIZER BAR - INSTALLATION	2-30,2-44
STABILIZER BAR - OPERATION	2-29,2-43
STABILIZER BAR - REMOVAL	2-29,2-44
STABILIZER BAR BUSHING - INSTALLATION	2-30
STABILIZER BAR BUSHING (FRONT) - REMOVAL	2-29
STAKING - STANDARD PROCEDURE, HEAT	23-10
STANDARD 4 CYLINDER - DESCRIPTION	8I-7
STARTER MOTOR RELAY - DESCRIPTION	8F-31
STARTER MOTOR RELAY - OPERATION	8F-31
STARTER MOTOR RELAY - REMOVAL	8F-31
STARTER SOLENOID - OPERATION	8F-31
STARTING - DESCRIPTION	8F-24
STARTING - OPERATION	8F-24
STARTING - STANDARD PROCEDURE, JUMP	0-17
STARTING SYSTEM TEST - DIAGNOSIS AND TESTING	8F-26
STATE DISPLAY TEST MODE, OPERATION - DRB III®	25-10
STEERING - CAUTION	19-1
STEERING - DESCRIPTION	19-1
STEERING - DIAGNOSIS AND TESTING, SUSPENSION	2-55
STEERING - OPERATION	19-1
STEERING - WARNING	19-1
STEERING COLUMN - DIAGNOSIS AND TESTING	19-11
STEERING COLUMN - INSTALLATION	19-15
STEERING COLUMN - REMOVAL	19-11
STEERING COLUMN INTERMEDIATE SHAFT - DIAGNOSIS AND TESTING	19-17
STEERING FASTENER TORQUE, SPECIFICATIONS - POWER	19-8
STEERING FLOW AND PRESSURE TEST - DIAGNOSIS AND TESTING, POWER	19-2
STEERING FLUID LEVEL CHECKING - STANDARD PROCEDURE, POWER	19-34
STEERING KNUCKLE - DIAGNOSIS AND TESTING	2-8
STEERING PRESSURE SWITCH - DESCRIPTION, POWER	19-27
STEERING PRESSURE SWITCH - INSTALLATION, POWER	19-27
STEERING PRESSURE SWITCH - OPERATION, POWER	19-27
STEERING PRESSURE SWITCH - REMOVAL, POWER	19-27
STEERING PUMP INITIAL OPERATION - STANDARD PROCEDURE, POWER	19-30
STEERING, SPECIAL TOOLS - POWER	19-9
STEERING SYSTEM DIAGNOSIS CHARTS - DIAGNOSIS AND TESTING	19-3
STEERING WHEEL - INSTALLATION	19-20
STEERING WHEEL - REMOVAL	19-19
STEM SEALS - INSTALLATION, VALVE	9-181
STEM SEALS - REMOVAL, VALVE	9-181
STOP LAMP - INSTALLATION, CENTER HIGH MOUNTED	8L-8
STOP LAMP - REMOVAL, CENTER HIGH MOUNTED	8L-8
STOP LAMP UNIT - INSTALLATION, CENTER HIGH MOUNTED	8L-9
STOP LAMP UNIT - JR27 ONLY - INSTALLATION, CENTER HIGH MOUNTED	8L-9
STOP LAMP UNIT - JR27 ONLY - REMOVAL, CENTER HIGH MOUNTED	8L-9
STOP LAMP UNIT - REMOVAL, CENTER HIGH MOUNTED	8L-8
STORAGE - INSTALLATION, CONVERTIBLE TOP	23-22
STORAGE - REMOVAL, CONVERTIBLE TOP	23-22
STRAP - INSTALLATION, CHECK	23-28
STRAP - INSTALLATION, REAR CHECK	23-46
STRAP - REMOVAL, CHECK	23-28
STRAP - REMOVAL, REAR CHECK	23-46
STRIKER - INSTALLATION, DECKLID LATCH	23-25
STRIKER - INSTALLATION, LATCH	23-37,23-49
STRIKER - INSTALLATION, SEAT BACK LATCH	23-116
STRIKER - REMOVAL, DECKLID LATCH	23-25
STRIKER - REMOVAL, LATCH	23-37,23-49
STRIKER - REMOVAL, SEAT BACK LATCH	23-116
STRUCTURAL ADHESIVE LOCATIONS - JR-27 - SPECIFICATIONS	23-188
STRUCTURAL ADHESIVE LOCATIONS - JR-41 - SPECIFICATIONS	23-199
STRUCTURAL COLLAR - INSTALLATION	9-117, 9-200,9-49
STRUCTURAL COLLAR - REMOVAL	9-117,9-199, 9-49
STUDS - FRONT - INSTALLATION, WHEEL MOUNTING	22-13
STUDS - FRONT - REMOVAL, WHEEL MOUNTING	22-13
STUDS - REAR - INSTALLATION, WHEEL MOUNTING	22-14
STUDS - REAR - REMOVAL, WHEEL MOUNTING	22-14
SUCTION LINE - DESCRIPTION	24-48
SUCTION LINE - INSTALLATION	24-48
SUCTION LINE - REMOVAL	24-48
SUN SENSOR - DESCRIPTION	24-22
SUN SENSOR - DIAGNOSIS AND TESTING	24-22
SUN SENSOR - INSTALLATION	24-23
SUN SENSOR - OPERATION	24-22
SUN SENSOR - REMOVAL	24-23
SUN VISOR - INSTALLATION	23-90
SUN VISOR - REMOVAL	23-90
SUN VISOR SUPPORT - INSTALLATION	23-91
SUN VISOR SUPPORT - REMOVAL	23-91
SUNROOF - DESCRIPTION	23-124
SUNROOF - DIAGNOSIS AND TESTING	23-124
SUNROOF CONTROL SWITCH - INSTALLATION	23-126
SUNROOF CONTROL SWITCH - REMOVAL	23-126
SUNROOF DRIVE MOTOR - INSTALLATION	23-127
SUNROOF DRIVE MOTOR - REMOVAL	23-126
SUNROOF EXPRESS MODULE - INSTALLATION	23-133
SUNROOF EXPRESS MODULE - REMOVAL	23-133
SUNROOF GLASS PANEL - INSTALLATION	23-128
SUNROOF GLASS PANEL - REMOVAL	23-128
SUNROOF GLASS PANEL SEAL - INSTALLATION	23-128
SUNROOF GLASS PANEL SEAL - REMOVAL	23-128
SUNROOF HOUSING DRAIN HOSE - INSTALLATION	23-129
SUNROOF HOUSING DRAIN HOSE - REMOVAL	23-128
SUNROOF MODULE ASSEMBLY - INSTALLATION	23-130
SUNROOF MODULE ASSEMBLY - REMOVAL	23-130
SUPPLY - INSTALLATION, HOSE	19-38
SUPPLY - PCM OUTPUT - OPERATION, 5 VOLT	8E-10
SUPPLY - PCM OUTPUT - SBEC CONTROLLER - OPERATION, 8-VOLT	8E-10
SUPPLY - REMOVAL, HOSE	19-37
SUPPORT - INSTALLATION, SUN VISOR	23-91
SUPPORT - REMOVAL, SUN VISOR	23-91
SUPPORT ADJUSTMENT, ADJUSTMENTS - ENGINE	9-117,9-200,9-50
SUPPORT CROSSMEMBER - INSTALLATION, RADIATOR	23-58
SUPPORT CROSSMEMBER - REMOVAL, RADIATOR	23-57
SUPPORT PLATE - INSTALLATION	5-37
SUPPORT PLATE - REMOVAL	5-37
SURFACE PREPARATION - STANDARD PROCEDURE, ENGINE GASKET	9-12,9-153,9-81
SURFACE TOUCH-UP - DESCRIPTION, PAINTED	23-94
SUSPENSION - CAUTION, FRONT	2-4
SUSPENSION - DESCRIPTION, FRONT	2-3
SUSPENSION - DESCRIPTION, REAR	2-32
SUSPENSION - OPERATION, FRONT	2-4
SUSPENSION - OPERATION, REAR	2-32
SUSPENSION - WARNING, FRONT	2-4
SUSPENSION AND STEERING - DIAGNOSIS AND TESTING	2-55
SUSPENSION CROSSMEMBER - DESCRIPTION, REAR	13-10
SUSPENSION CROSSMEMBER - INSTALLATION, FRONT	13-9
SUSPENSION CROSSMEMBER - INSTALLATION, REAR	13-12
SUSPENSION CROSSMEMBER - REMOVAL, FRONT	13-9
SUSPENSION CROSSMEMBER - REMOVAL, REAR	13-10
SUSPENSION FASTENER TORQUE, SPECIFICATIONS - FRONT	2-4

Description	Group-Page
SUSPENSION FASTENER TORQUE, SPECIFICATIONS - REAR	2-33
SUSPENSION, SPECIAL TOOLS - FRONT	2-5
SUSPENSION, SPECIAL TOOLS - REAR	2-33
SWITCH - ADJUSTMENT, BRAKE LAMP	8L-8
SWITCH - DESCRIPTION, AUTOSTICK	21-180
SWITCH - DESCRIPTION, BRAKE LAMP	8L-6
SWITCH - DESCRIPTION, DRIVER SEAT	8N-11
SWITCH - DESCRIPTION, HAZARD WARNING	8L-14
SWITCH - DESCRIPTION, HEATED SEAT	8G-8
SWITCH - DESCRIPTION, HORN	8H-4
SWITCH - DESCRIPTION, MULTI-FUNCTION	8L-21
SWITCH - DESCRIPTION, OIL PRESSURE	9-209
SWITCH - DESCRIPTION, POWER STEERING PRESSURE	19-27
SWITCH - DESCRIPTION, REAR WINDOW DEFOGGER	8G-3
SWITCH - DESCRIPTION, THERMAL LIMITER	24-27
SWITCH - DIAGNOSIS AND TESTING, BRAKE LAMP	8L-6
SWITCH - DIAGNOSIS AND TESTING, CLUTCH PEDAL INTERLOCK	6-10
SWITCH - DIAGNOSIS AND TESTING, DOOR LOCK / UNLOCK	8N-4
SWITCH - DIAGNOSIS AND TESTING, DRIVER SEAT	8N-12
SWITCH - DIAGNOSIS AND TESTING, HEATED SEAT	8G-8
SWITCH - DIAGNOSIS AND TESTING, KEY LEFT IN IGNITION	8B-3
SWITCH - DIAGNOSIS AND TESTING, MULTI-FUNCTION	8L-22
SWITCH - DIAGNOSIS AND TESTING, POWER MIRROR	8N-9
SWITCH - DIAGNOSIS AND TESTING, REAR WINDOW DEFOGGER	8G-3
SWITCH - DIAGNOSIS AND TESTING, THERMAL LIMITER	24-27
SWITCH - DIAGNOSIS AND TESTING, WINDOW	8N-19
SWITCH - EXPORT - DIAGNOSIS AND TESTING, HEADLAMP LEVELING	8L-16
SWITCH - INSTALLATION	8P-5
SWITCH - INSTALLATION, BACK-UP LAMP	21-20,21-72
SWITCH - INSTALLATION, BRAKE FLUID LEVEL	5-5
SWITCH - INSTALLATION, BRAKE LAMP	8L-7
SWITCH - INSTALLATION, CLUTCH PEDAL INTERLOCK	6-11
SWITCH - INSTALLATION, DECKLID RELEASE	8N-5
SWITCH - INSTALLATION, DOOR CYLINDER LOCK	8N-4
SWITCH - INSTALLATION, DOOR LOCK / UNLOCK	8N-4
SWITCH - INSTALLATION, DRIVER SEAT	8N-14
SWITCH - INSTALLATION, HEADLAMP LEVELING	8L-17
SWITCH - INSTALLATION, HEATED SEAT	8G-9
SWITCH - INSTALLATION, MULTI-FUNCTION	8L-24
SWITCH - INSTALLATION, OIL PRESSURE	9-209
SWITCH - INSTALLATION, POWER MIRROR	8N-9
SWITCH - INSTALLATION, POWER STEERING PRESSURE	19-27
SWITCH - INSTALLATION, SUNROOF CONTROL	23-126
SWITCH - INSTALLATION, TRACTION CONTROL	5-60
SWITCH - INSTALLATION, WINDOW	8N-20
SWITCH - OPERATION, AUTOSTICK	21-180
SWITCH - OPERATION, BRAKE LAMP	8L-6
SWITCH - OPERATION, DRIVER SEAT	8N-11
SWITCH - OPERATION, HAZARD WARNING	8L-14
SWITCH - OPERATION, HEATED SEAT	8G-8
SWITCH - OPERATION, MULTI-FUNCTION	8L-21
SWITCH - OPERATION, POWER STEERING PRESSURE	19-27
SWITCH - OPERATION, REAR WINDOW DEFOGGER	8G-3
SWITCH - OPERATION, THERMAL LIMITER	24-27
SWITCH - REMOVAL	8P-4
SWITCH - REMOVAL, BACK-UP LAMP	21-20, 21-72
SWITCH - REMOVAL, BRAKE FLUID LEVEL	5-5
SWITCH - REMOVAL, BRAKE LAMP	8L-7
SWITCH - REMOVAL, CLUTCH PEDAL INTERLOCK	6-11
SWITCH - REMOVAL, DECKLID RELEASE	8N-5
SWITCH - REMOVAL, DOOR CYLINDER LOCK	8N-3
SWITCH - REMOVAL, DOOR LOCK / UNLOCK	8N-4
SWITCH - REMOVAL, DRIVER SEAT	8N-14
SWITCH - REMOVAL, HEADLAMP LEVELING	8L-17
SWITCH - REMOVAL, HEATED SEAT	8G-9
SWITCH - REMOVAL, MULTI-FUNCTION	8L-24
SWITCH - REMOVAL, OIL PRESSURE	9-209
SWITCH - REMOVAL, POWER MIRROR	8N-9
SWITCH - REMOVAL, POWER STEERING PRESSURE	19-27
SWITCH - REMOVAL, SUNROOF CONTROL	23-126
SWITCH - REMOVAL, TRACTION CONTROL	5-59
SWITCH - REMOVAL, WINDOW	8N-20
SWITCH ASSY - DESCRIPTION, SOLENOID/PRESSURE	21-223
SWITCH ASSY - INSTALLATION, SOLENOID/PRESSURE	21-226
SWITCH ASSY - OPERATION, SOLENOID/ PRESSURE	21-224
SWITCH ASSY - REMOVAL, SOLENOID/ PRESSURE	21-225
SWITCHES - DESCRIPTION, REMOTE	8A-7
SWITCHES - DIAGNOSIS AND TESTING, REMOTE	8A-8
SWITCHES - INSTALLATION, REMOTE	8A-9
SWITCHES - OPERATION, REMOTE	8A-8
SWITCHES - REMOVAL, REMOTE	8A-9
SYMBOLS - DESCRIPTION, INTERNATIONAL	Intro.-5
SYMBOLS - DESCRIPTION, INTERNATIONAL	0-1
SYNCHRONIZER - DESCRIPTION	21-108
SYNCHRONIZER - DISASSEMBLY	21-108,21-40
T350 EQUIPPED MODELS - INSTALLATION	6-13
T350 EQUIPPED MODELS - REMOVAL	6-12
T350 MANUAL TRANSAXLE - ASSEMBLY	21-11
T350 MANUAL TRANSAXLE - CLEANING	21-10
T350 MANUAL TRANSAXLE - DESCRIPTION	21-2
T350 MANUAL TRANSAXLE - DISASSEMBLY	21-4
T350 MANUAL TRANSAXLE - INSPECTION	21-10
T350 MANUAL TRANSAXLE - INSTALLATION	21-16
T350 MANUAL TRANSAXLE - REMOVAL	21-4
T350 MANUAL TRANSAXLE - SPECIAL TOOLS	21-18
T350 MANUAL TRANSAXLE - SPECIFICATIONS	21-16
T850 EQUIPPED MODELS - INSTALLATION	6-13
T850 EQUIPPED MODELS - REMOVAL	6-13
T850 MANUAL TRANSAXLE - ASSEMBLY	21-58
T850 MANUAL TRANSAXLE - DESCRIPTION	21-43
T850 MANUAL TRANSAXLE - DISASSEMBLY	21-53
T850 MANUAL TRANSAXLE - INSTALLATION	21-66
T850 MANUAL TRANSAXLE - OPERATION	21-45
T850 MANUAL TRANSAXLE - REMOVAL	21-52
T850 MANUAL TRANSAXLE - SPECIFICATIONS	21-67
T850 TRANSAXLE - SPECIAL TOOLS	21-69
TABLE-ATC, SPECIFICATIONS - A/C APPLICATION	24-11
TAIL LAMP - INSTALLATION	8L-26
TAIL LAMP - REMOVAL	8L-26
TAIL LAMP UNIT - INSTALLATION	8L-26
TAIL LAMP UNIT - REMOVAL	8L-26
TANK - DESCRIPTION, FUEL	14-10
TANK - INSTALLATION, FUEL	14-11
TANK - OPERATION, FUEL	14-10
TANK - REMOVAL, FUEL	14-11
TANK FILLER TUBE - INSTALLATION, FUEL	14-12
TANK FILLER TUBE - REMOVAL, FUEL	14-11
TANK VENT TUBE - INSTALLATION, FUEL	14-12
TANK VENT TUBE - REMOVAL, FUEL	14-12
TAPE - INSTALLATION, FOAM	23-54
TAPE - REMOVAL, FOAM	23-54
TASK MANAGER - DESCRIPTION	25-23
TASK MANAGER - OPERATION	25-23
TEMP SENSOR - DESCRIPTION, AMBIENT	24-23
TEMP SENSOR - INSTALLATION, AMBIENT	24-23
TEMP SENSOR - OPERATION, AMBIENT	24-23
TEMP SENSOR - REMOVAL, AMBIENT	24-23
TEMPERATURE SENSOR - DESCRIPTION, ENGINE COOLANT	7-31
TEMPERATURE SENSOR - DESCRIPTION, EVAPORATOR	24-19
TEMPERATURE SENSOR - DESCRIPTION, IN-CAR	24-21
TEMPERATURE SENSOR - DESCRIPTION, INLET AIR	14-28
TEMPERATURE SENSOR - INSTALLATION, ENGINE COOLANT	7-32
TEMPERATURE SENSOR - INSTALLATION, EVAPORATOR	24-20
TEMPERATURE SENSOR - OPERATION, ENGINE COOLANT	7-31
TEMPERATURE SENSOR - OPERATION, EVAPORATOR	24-20
TEMPERATURE SENSOR - OPERATION, IN-CAR	24-21
TEMPERATURE SENSOR - OPERATION, INLET AIR	14-28
TEMPERATURE SENSOR - REMOVAL, ENGINE COOLANT	7-31
TEMPERATURE SENSOR - REMOVAL, EVAPORATOR	24-20
TEMPERATURE SENSOR - REMOVAL, IN-CAR	24-22
TENSION - 2.7L - STANDARD PROCEDURE, CHECKING ACCESSORY DRIVE BELT	7-5
TENSION, SPECIFICATIONS - ACCESSORY DRIVE BELT	7-1
TENSIONER - DESCRIPTION, SEAT BELT	8O-16
TENSIONER - OPERATION, SEAT BELT	8O-17
TENSIONER & PULLEY - INSTALLATION, TIMING BELT	9-137,9-70
TENSIONER & PULLEY - REMOVAL, TIMING BELT	9-136,9-70
TERMINAL - INSTALLATION	8W-01-14
TERMINAL - REMOVAL	8W-01-14
TEST - DIAGNOSIS AND TESTING, CONTROL CIRCUIT	8F-24
TEST - DIAGNOSIS AND TESTING, CYLINDER COMBUSTION PRESSURE LEAKAGE	9-150,9-78,9-9
TEST - DIAGNOSIS AND TESTING, CYLINDER COMPRESSION PRESSURE	9-150, 9-78,9-9
TEST - DIAGNOSIS AND TESTING, ELECTRIC FAN MOTOR	7-40
TEST - DIAGNOSIS AND TESTING, FEED CIRCUIT	8F-29
TEST - DIAGNOSIS AND TESTING, FEED CIRCUIT RESISTANCE	8F-28
TEST - DIAGNOSIS AND TESTING, INSPECTION AND ROAD	5-52
TEST - DIAGNOSIS AND TESTING, POWER STEERING FLOW AND PRESSURE	19-2
TEST - DIAGNOSIS AND TESTING, ROAD	21-113
TEST - DIAGNOSIS AND TESTING, STARTING SYSTEM	8F-26
TEST - STANDARD PROCEDURE, IGNITION-OFF DRAW	8F-11
TEST - STANDARD PROCEDURE, OPEN-CIRCUIT VOLTAGE	8F-10
TEST MODE, OPERATION - DRB III® STATE DISPLAY	25-10

Description	Group-Page
TESTER - STANDARD PROCEDURE, USING MICRO 420 BATTERY	8F-7
TESTS - DIAGNOSIS AND TESTING, CLUTCH AIR PRESSURE	21-116
TESTS - DIAGNOSIS AND TESTING, HYDRAULIC PRESSURE	21-114
TETHER CUP - INSTALLATION, CHILD	8O-4
TETHER CUP - REMOVAL, CHILD	8O-4
TETHER CUP COVER - INSTALLATION, CHILD	8O-5
TETHER CUP COVER - REMOVAL, CHILD	8O-5
THEFT SECURITY - DESCRIPTION, VEHICLE	8Q-1
THEFT SECURITY - OPERATION, VEHICLE	8Q-1
THEFT SECURITY SYSTEM - DIAGNOSIS AND TESTING, VEHICLE	8Q-3
THERMAL LIMITER SWITCH - DESCRIPTION	24-27
THERMAL LIMITER SWITCH - DIAGNOSIS AND TESTING	24-27
THERMAL LIMITER SWITCH - OPERATION	24-27
THERMOSTAT TESTING - DIAGNOSIS AND TESTING, ENGINE COOLANT	7-32
THREADED HOLE REPAIR - DESCRIPTION	Intro.-5
THREADS - STANDARD PROCEDURE, REPAIR OF DAMAGED OR WORN	9-10,9-151, 9-79
THROTTLE BODY - DESCRIPTION	14-34
THROTTLE BODY - OPERATION	14-34
THROTTLE CONTROL CABLE - INSTALLATION	14-38
THROTTLE CONTROL CABLE - REMOVAL	14-36
THROTTLE POSITION SENSOR - DESCRIPTION	14-38
THROTTLE POSITION SENSOR - OPERATION	14-38
TIE ROD - OUTER - INSTALLATION	19-28
TIE ROD - OUTER - REMOVAL	19-28
TIMER MODULE - DIAGNOSIS AND TESTING, SEAT BELT CONTROL	8O-12
TIMER MODULE - JR27 - EXPORT - DESCRIPTION, SEAT BELT CONTROL	8O-12
TIMER MODULE - JR27 - EXPORT - INSTALLATION, SEAT BELT CONTROL	8O-14
TIMER MODULE - JR27 - EXPORT - OPERATION, SEAT BELT CONTROL	8O-12
TIMER MODULE - JR27 - EXPORT - REMOVAL, SEAT BELT CONTROL	8O-14
TIMING - DESCRIPTION, VALVE	9-216
TIMING BELT - INSTALLATION	9-134,9-68
TIMING BELT - REMOVAL	9-132,9-66
TIMING BELT COVER(S) - INSTALLATION	9-132, 9-65
TIMING BELT COVER(S) - REMOVAL	9-130,9-64
TIMING BELT TENSIONER & PULLEY - INSTALLATION	9-137,9-70
TIMING BELT TENSIONER & PULLEY - REMOVAL	9-136,9-70
TIMING CHAIN - INSTALLATION	9-222
TIMING CHAIN - REMOVAL	9-220
TIMING CHAIN COVER - INSTALLATION	9-219
TIMING CHAIN COVER - REMOVAL	9-219
TIMING, VERIFICATION - ENGINE	9-218
TIMING VERIFICATION - STANDARD PROCEDURE, VALVE	9-64
TIRE - DESCRIPTION	22-8
TIRE AND WHEEL ASSEMBLY - INSTALLATION	22-7
TIRE AND WHEEL ASSEMBLY - REMOVAL	22-7
TIRE AND WHEEL BALANCE - STANDARD PROCEDURE	22-5
TIRE AND WHEEL MATCH MOUNTING - STANDARD PROCEDURE	22-6
TIRE AND WHEEL ROTATION - STANDARD PROCEDURE	22-7
TIRE AND WHEEL VIBRATION - DIAGNOSIS AND TESTING	22-1
TIRE INFLATION PRESSURES - STANDARD PROCEDURE	22-10
TIRE LEAK REPAIRING - STANDARD PROCEDURE	22-11
TIRE NOISE - DIAGNOSIS AND TESTING	22-9
TIRE PRESSURE FOR HIGH SPEED OPERATION - STANDARD PROCEDURE	22-11
TIRE (TEMPORARY) - DESCRIPTION, SPARE	22-9
TIRE WEAR PATTERNS - DIAGNOSIS AND TESTING	22-9
TIRES - CLEANING	22-11
TIRES - DESCRIPTION, RADIAL-PLY	22-9
TIRES - DESCRIPTION, REPLACEMENT	22-9
TIRE/VEHICLE LEAD - DIAGNOSIS AND TESTING	22-9
TONE WHEEL - INSPECTION	5-58
TONE WHEEL RUNOUT, SPECIFICATIONS	5-54
TOOLS - 2.0L DOHC ENGINE, SPECIAL	9-20
TOOLS - 2.4L ENGINE, SPECIAL	9-89
TOOLS - 2.7L ENGINE, SPECIAL	9-160
TOOLS - BASE BRAKE SYSTEM, SPECIAL	5-4
TOOLS - BATTERY SYSTEM SPECIAL TOOLS, SPECIAL	8F-6
TOOLS - BODY, SPECIAL	23-12
TOOLS - COOLING SYSTEM, SPECIAL	7-3
TOOLS - EXHAUST SYSTEM, SPECIAL	11-5
TOOLS - FRONT SUSPENSION, SPECIAL	2-5
TOOLS - FUEL, SPECIAL	14-21,14-4
TOOLS - HALFSHAFT, SPECIAL	3-9
TOOLS - POWER STEERING, SPECIAL	19-9
TOOLS - REAR SUSPENSION, SPECIAL	2-33
TOOLS - WIRING/TERMINAL, SPECIAL	8W-01-10
TOOLS, SCHEMATICS AND DIAGRAMS - SPECIAL	21-173
TOOLS, SPECIAL TOOLS - BATTERY SYSTEM SPECIAL	8F-6
TOOLS, T350 MANUAL TRANSAXLE - SPECIAL	21-18
TOOLS, T850 TRANSAXLE - SPECIAL	21-69
TOP - ADJUSTMENT, CONVERTIBLE	23-14
TOP COVER - INSTALLATION, FOLDING	23-18
TOP COVER - INSTALLATION, INSTRUMENT PANEL	23-73
TOP COVER - REMOVAL, FOLDING	23-17
TOP COVER - REMOVAL, INSTRUMENT PANEL	23-73
TOP FRAME CAM - ADJUSTMENT	23-15
TOP HEADLINING - INSTALLATION	23-18
TOP HEADLINING - REMOVAL	23-18
TOP REAR WINDOW - INSTALLATION, CONVERTIBLE	23-21
TOP REAR WINDOW - REMOVAL, CONVERTIBLE	23-20
TOP STORAGE - INSTALLATION, CONVERTIBLE	23-22
TOP STORAGE - REMOVAL, CONVERTIBLE	23-22
TOP TORQUE - SPECIFICATIONS, CONVERTIBLE	23-17
TOUCH-UP - DESCRIPTION, PAINTED SURFACE	23-94
TOW HOOK - INSTALLATION, FRONT	13-13
TOW HOOK - REMOVAL, FRONT	13-13
TOWING - STANDARD PROCEDURE	0-18
TRACK - DESCRIPTION, POWER SEAT	8N-14
TRACK - DIAGNOSIS AND TESTING, POWER SEAT	8N-15
TRACK - INSTALLATION, POWER SEAT	8N-16
TRACK - OPERATION, POWER SEAT	8N-14
TRACK - REMOVAL, POWER SEAT	8N-16
TRACTION CONTROL - DESCRIPTION	5-50
TRACTION CONTROL - OPERATION	5-51
TRACTION CONTROL SWITCH - INSTALLATION	5-60
TRACTION CONTROL SWITCH - REMOVAL	5-59
TRAILING LINK - DESCRIPTION	2-45
TRAILING LINK - DIAGNOSIS AND TESTING	2-45
TRAILING LINK - INSTALLATION	2-45
TRAILING LINK - OPERATION	2-45
TRAILING LINK - REMOVAL	2-45
TRANSAXLE - ASSEMBLY, T350 MANUAL	21-11
TRANSAXLE - ASSEMBLY, T850 MANUAL	21-58
TRANSAXLE - CLEANING, T350 MANUAL	21-10
TRANSAXLE - DESCRIPTION, 41TE AUTOMATIC	21-110
TRANSAXLE - DESCRIPTION, T350 MANUAL	21-2
TRANSAXLE - DESCRIPTION, T850 MANUAL	21-43
TRANSAXLE - DISASSEMBLY, T350 MANUAL	21-4
TRANSAXLE - DISASSEMBLY, T850 MANUAL	21-53
TRANSAXLE - INSPECTION, T350 MANUAL	21-10
TRANSAXLE - INSTALLATION, T350 MANUAL	21-16
TRANSAXLE - INSTALLATION, T850 MANUAL	21-66
TRANSAXLE - OPERATION, 41TE AUTOMATIC	21-112
TRANSAXLE - OPERATION, T850 MANUAL	21-45
TRANSAXLE - REMOVAL, T350 MANUAL	21-4
TRANSAXLE - REMOVAL, T850 MANUAL	21-52
TRANSAXLE - SPECIAL TOOLS, T350 MANUAL	21-18
TRANSAXLE - SPECIAL TOOLS, T850	21-69
TRANSAXLE - SPECIFICATIONS, 41TE	21-171
TRANSAXLE - SPECIFICATIONS, T350 MANUAL	21-16
TRANSAXLE - SPECIFICATIONS, T850 MANUAL	21-67
TRANSAXLE FLUID - DESCRIPTION, AUTOMATIC/MANUAL	0-4
TRANSAXLE GENERAL DIAGNOSIS - DIAGNOSIS AND TESTING, 41TE	21-113
TRANSAXLE HYDRAULIC SCHEMATICS, SCHEMATICS AND DIAGRAMS - 41TE	21-159
TRANSDUCER - DESCRIPTION, A/C PRESSURE	24-19
TRANSDUCER - INSTALLATION, A/C PRESSURE	24-19
TRANSDUCER - OPERATION, A/C PRESSURE	24-19
TRANSDUCER - REMOVAL, A/C PRESSURE	24-19
TRANSMISSION CONTROL MODULE - DESCRIPTION	8E-15
TRANSMISSION CONTROL MODULE - OPERATION	8E-15
TRANSMISSION CONTROL RELAY - DESCRIPTION	21-236
TRANSMISSION CONTROL RELAY - OPERATION	21-236
TRANSMISSION COOLER HOSES - DESCRIPTION	7-46
TRANSMISSION OIL COOLER - CLEANING	7-46
TRANSMISSION OIL COOLER - DESCRIPTION	7-46
TRANSMISSION OIL COOLER - INSPECTION	7-46
TRANSMISSION OIL COOLER - INSTALLATION	7-46
TRANSMISSION OIL COOLER - OPERATION	7-46
TRANSMISSION OIL COOLER - REMOVAL	7-46
TRANSMISSION RANGE INDICATOR ILLUMINATION - INSTALLATION	8L-31
TRANSMISSION RANGE INDICATOR ILLUMINATION - REMOVAL	8L-31
TRANSMISSION RANGE SENSOR - DESCRIPTION	21-237
TRANSMISSION RANGE SENSOR - INSTALLATION	21-238
TRANSMISSION RANGE SENSOR - OPERATION	21-237
TRANSMISSION RANGE SENSOR - REMOVAL	21-238
TRANSMITTER - DESCRIPTION, UNIVERSAL	8M-4
TRANSMITTER - DIAGNOSIS AND TESTING, UNIVERSAL	8M-4
TRANSMITTER - OPERATION, UNIVERSAL	8M-4
TRANSMITTER - REMOVAL, UNIVERSAL	8M-4
TRANSMITTER PROGRAMMING - STANDARD PROCEDURE, RKE	8N-5
TRANSMITTER, SPECIFICATIONS	8N-6
TRANSPONDER KEY - DESCRIPTION	8Q-3
TRANSPONDER KEY - OPERATION	8Q-3
TRANSPONDER PROGRAMMING - STANDARD PROCEDURE	8Q-4
TRAY - DESCRIPTION, BATTERY	8F-15
TRAY - INSTALLATION, BATTERY	8F-16
TRAY - OPERATION, BATTERY	8F-15
TRAY - REMOVAL, BATTERY	8F-16

Description	Group-Page
TRD LINK - DESCRIPTION	21-238
TRD LINK - OPERATION	21-238
TREAD WEAR INDICATORS - DIAGNOSIS AND TESTING	22-10
TRIM - INSTALLATION, B-PILLAR LOWER	23-80
TRIM - INSTALLATION, LEFT LOWER INSTRUMENT PANEL	23-73
TRIM - INSTALLATION, LOWER QUARTER	23-87
TRIM - INSTALLATION, RIGHT LOWER INSTRUMENT PANEL	23-75
TRIM - INSTALLATION, UPPER B-PILLAR	23-91
TRIM - INSTALLATION, UPPER QUARTER	23-92
TRIM - REMOVAL, B-PILLAR LOWER	23-80
TRIM - REMOVAL, LEFT LOWER INSTRUMENT PANEL	23-73
TRIM - REMOVAL, LOWER QUARTER	23-87
TRIM - REMOVAL, RIGHT LOWER INSTRUMENT PANEL	23-75
TRIM - REMOVAL, UPPER B-PILLAR	23-91
TRIM - REMOVAL, UPPER QUARTER	23-91
TRIM BEZEL - INSTALLATION, CD CHANGER	23-66
TRIM BEZEL - INSTALLATION, RIGHT INSTRUMENT PANEL	23-75
TRIM BEZEL - REMOVAL, CD CHANGER	23-66
TRIM BEZEL - REMOVAL, RIGHT INSTRUMENT PANEL	23-75
TRIM COVER - INSTALLATION, DRIVER AIRBAG	8O-8
TRIM COVER - REMOVAL, DRIVER AIRBAG	8O-7
TRIM LACE - INSTALLATION, OPENING	23-130
TRIM LACE - REMOVAL, OPENING	23-130
TRIM PANEL - INSTALLATION	23-39,23-50
TRIM PANEL - INSTALLATION, COWL	23-82
TRIM PANEL - INSTALLATION, DOOR SILL	23-82
TRIM PANEL - INSTALLATION, QUARTER	23-87
TRIM PANEL - INSTALLATION, REAR SHELF	23-88
TRIM PANEL - REMOVAL	23-39,23-49
TRIM PANEL - REMOVAL, COWL	23-82
TRIM PANEL - REMOVAL, DOOR SILL	23-82
TRIM PANEL - REMOVAL, QUARTER	23-87
TRIM PANEL - REMOVAL, REAR SHELF	23-88
TRIM WELT - INSTALLATION, DOOR OPENING	23-136
TRIM WELT - REMOVAL, DOOR OPENING	23-136
TRIP COMPUTER/TRAVELER ILLUMINATION LAMP - INSTALLATION, COMPAPSS MINI	8L-29
TRIP COMPUTER/TRAVELER ILLUMINATION LAMP - REMOVAL, COMPAPSS MINI	8L-29
TRIP DEFINITION - DESCRIPTION	25-1
TROUBLE CODES - STANDARD PROCEDURE, OBTAINING DIAGNOSTIC	8E-10
TROUGH - INSTALLATION, REAR BEARING OIL FEED	21-38
TROUGH - REMOVAL, REAR BEARING OIL FEED	21-38
TRUNK LAMP UNIT - INSTALLATION	8L-26
TRUNK LAMP UNIT - REMOVAL	8L-26
TUBE - INSTALLATION, FUEL TANK FILLER	14-12
TUBE - INSTALLATION, FUEL TANK VENT	14-12
TUBE - REMOVAL, FUEL TANK FILLER	14-11
TUBE - REMOVAL, FUEL TANK VENT	14-12
TUBES AND HOSES - DESCRIPTION, BRAKE	5-6
TUBES AND HOSES - INSPECTION, BRAKE	5-6
TUBES AND HOSES - OPERATION, BRAKE	5-6
TUBING AND FITTINGS - STANDARD PROCEDURE	24-8
TURNING TORQUE - ADJUSTMENT, DIFFERENTIAL	21-80
UNIT - EXPORT - INSTALLATION, HEADLAMP	8L-20
UNIT - EXPORT - INSTALLATION, REAR FOG LAMP	8L-25
UNIT - EXPORT - INSTALLATION, SIDE REPEATER LAMP	8L-25
UNIT - EXPORT - REMOVAL, HEADLAMP	8L-19
UNIT - EXPORT - REMOVAL, REAR FOG LAMP	8L-25
UNIT - EXPORT - REMOVAL, SIDE REPEATER LAMP	8L-25
UNIT - INSTALLATION, CENTER HIGH MOUNTED STOP LAMP	8L-9
UNIT - INSTALLATION, HEADLAMP	8L-18
UNIT - INSTALLATION, LICENSE PLATE LAMP	8L-21
UNIT - INSTALLATION, TAIL LAMP	8L-26
UNIT - INSTALLATION, TRUNK LAMP	8L-26
UNIT - JR27 ONLY - INSTALLATION, CENTER HIGH MOUNTED STOP LAMP	8L-9
UNIT - JR27 ONLY - INSTALLATION, LICENSE PLATE LAMP	8L-21
UNIT - JR27 ONLY - REMOVAL, CENTER HIGH MOUNTED STOP LAMP	8L-9
UNIT - JR27 ONLY - REMOVAL, LICENSE PLATE LAMP	8L-21
UNIT - REMOVAL, CENTER HIGH MOUNTED STOP LAMP	8L-8
UNIT - REMOVAL, HEADLAMP	8L-18
UNIT - REMOVAL, LICENSE PLATE LAMP	8L-21
UNIT - REMOVAL, TAIL LAMP	8L-26
UNIT - REMOVAL, TRUNK LAMP	8L-26
UNIT / SENSOR - DESCRIPTION, FUEL LEVEL SENDING	14-4
UNIT / SENSOR - INSTALLATION, FUEL LEVEL SENDING	14-5
UNIT / SENSOR - OPERATION, FUEL LEVEL SENDING	14-4
UNIT / SENSOR - REMOVAL, FUEL LEVEL SENDING	14-5
UNIT ALIGNMENT - EXPORT - STANDARD PROCEDURE, FOG LAMP	8L-12
UNIT ALIGNMENT - EXPORT - STANDARD PROCEDURE, HEADLAMP	8L-18
UNIT ALIGNMENT - STANDARD PROCEDURE, FOG LAMP	8L-12
UNIT ALIGNMENT - STANDARD PROCEDURE, HEADLAMP	8L-17
UNIVERSAL TRANSMITTER - DESCRIPTION	8M-4
UNIVERSAL TRANSMITTER - DIAGNOSIS AND TESTING	8M-4
UNIVERSAL TRANSMITTER - OPERATION	8M-4
UNIVERSAL TRANSMITTER - REMOVAL	8M-4
UNLOCK SWITCH - DIAGNOSIS AND TESTING, DOOR LOCK	8N-4
UNLOCK SWITCH - INSTALLATION, DOOR LOCK	8N-4
UNLOCK SWITCH - REMOVAL, DOOR LOCK	8N-4
UPPER - INSPECTION, INTAKE MANIFOLD	9-214
UPPER - INSTALLATION, INTAKE MANIFOLD	9-214
UPPER - REMOVAL, INTAKE MANIFOLD	9-213
UPPER BALL JOINT - ASSEMBLY	2-50
UPPER BALL JOINT - DESCRIPTION	2-30,2-47
UPPER BALL JOINT - DIAGNOSIS AND TESTING	2-30,2-47
UPPER BALL JOINT - DISASSEMBLY	2-50
UPPER B-PILLAR TRIM - INSTALLATION	23-91
UPPER B-PILLAR TRIM - REMOVAL	23-91
UPPER CONTROL ARM - DESCRIPTION	2-30, 2-47
UPPER CONTROL ARM - INSPECTION	2-31,2-50
UPPER CONTROL ARM - INSTALLATION	2-31, 2-51
UPPER CONTROL ARM - OPERATION	2-30,2-47
UPPER CONTROL ARM - REMOVAL	2-31,2-47
UPPER DECK MOLDING - INSTALLATION	23-91
UPPER DECK MOLDING - REMOVAL	23-91
UPPER QUARTER TRIM - INSTALLATION	23-92
UPPER QUARTER TRIM - REMOVAL	23-91
UPSTREAM 1/1, 2/1 2.7L - INSTALLATION	14-33
UPSTREAM 1/1, 2/1 2.7L - REMOVAL	14-33
UPSTREAM 1/1 4 CYLINDER - INSTALLATION	14-34
UPSTREAM 1/1 4 CYLINDER - REMOVAL	14-33
VAC LEAK DETECTION ASSY - DESCRIPTION, NATURAL	25-15
VAC LEAK DETECTION ASSY - INSTALLATION, NATURAL	25-16
VAC LEAK DETECTION ASSY - REMOVAL, NATURAL	25-15
VACUUM FLUORESCENT DISPLAY - INSTALLATION	8J-3
VACUUM FLUORESCENT DISPLAY - REMOVAL	8J-3
VACUUM PORT REPAIR - STANDARD PROCEDURE, INTAKE MANIFOLD	9-213
VACUUM RESERVOIR - DESCRIPTION	8P-5
VACUUM RESERVOIR - INSTALLATION	8P-6
VACUUM RESERVOIR - OPERATION	8P-5
VACUUM RESERVOIR - REMOVAL	8P-5
VALVE - DESCRIPTION, A/C EXPANSION	24-43
VALVE - DESCRIPTION, ASPIRATOR	5-5
VALVE - DESCRIPTION, FLOW MANAGEMENT	14-4
VALVE - DESCRIPTION, PCV	25-19
VALVE - DESCRIPTION, PROPORTIONING	5-30
VALVE - DIAGNOSIS AND TESTING, A/C EXPANSION	24-43
VALVE - DIAGNOSIS AND TESTING, PROPORTIONING	5-30
VALVE - INSTALLATION, A/C EXPANSION	24-44
VALVE - INSTALLATION, ASPIRATOR	5-5
VALVE - INSTALLATION, OIL PRESSURE RELIEF	9-209
VALVE - OPERATION, A/C EXPANSION	24-43
VALVE - OPERATION, ASPIRATOR	5-5
VALVE - OPERATION, FLOW MANAGEMENT	14-4
VALVE - OPERATION, PCV	25-20
VALVE - OPERATION, PROPORTIONING	5-30
VALVE - REMOVAL, A/C EXPANSION	24-44
VALVE - REMOVAL, ASPIRATOR	5-5
VALVE - REMOVAL, OIL PRESSURE RELIEF	9-209
VALVE AND VALVE SEAT REFACING - STANDARD PROCEDURE	9-175
VALVE BODY - ASSEMBLY	21-246
VALVE BODY - DESCRIPTION	21-239
VALVE BODY - DISASSEMBLY	21-242
VALVE BODY - INSTALLATION	21-251
VALVE BODY - OPERATION	21-239
VALVE BODY - REMOVAL	21-240
VALVE CORE - DESCRIPTION, SERVICE PORT	24-50
VALVE CORE - OPERATION, SERVICE PORT	24-50
VALVE SEAT REFACING - STANDARD PROCEDURE, VALVE	9-175
VALVE SPRINGS - DESCRIPTION	9-178
VALVE STEM SEALS - INSTALLATION	9-181
VALVE STEM SEALS - REMOVAL	9-181
VALVE TIMING - DESCRIPTION	9-216
VALVE TIMING VERIFICATION - STANDARD PROCEDURE	9-64
VALVES - OPERATION, HYDRAULIC CIRCUITS	5-60
VALVES & SEATS - CLEANING, INTAKE/EXHAUST	9-100,9-33
VALVES & SEATS - DESCRIPTION, INTAKE/EXHAUST	9-100,9-175,9-33
VALVES & SEATS - INSPECTION, INTAKE/EXHAUST	9-177
VALVES & SEATS - INSTALLATION, INTAKE/EXHAUST	9-177
VALVES & SEATS - OPERATION, INTAKE/EXHAUST	9-100,9-33
VALVES & SEATS - REMOVAL, INTAKE/EXHAUST	9-177
VANITY LAMP - INSTALLATION	8L-31
VANITY LAMP - REMOVAL	8L-31
VAPOR CANISTER - DESCRIPTION	25-20
VAPOR CANISTER - INSTALLATION	25-22
VAPOR CANISTER - OPERATION	25-20
VAPOR CANISTER - REMOVAL	25-21
VARIABLE BRAKE PROPORTIONING - DESCRIPTION, ELECTRONIC	5-49
VARIABLE BRAKE PROPORTIONING - OPERATION, ELECTRONIC	5-51
VECI LABEL - DESCRIPTION	Intro.-11
VEHICLE - INSTALLATION, IN	9-180
VEHICLE - INSTALLATION, OFF	9-180
VEHICLE - REMOVAL, IN	9-178
VEHICLE - REMOVAL, OFF	9-178
VEHICLE DOES NOT FILL - DIAGNOSIS AND TESTING	25-19
VEHICLE EMISSION CONTROL INFORMATION LABEL - DESCRIPTION	25-1

Description	Group-Page
VEHICLE IDENTIFICATION - DESCRIPTION	23-1
VEHICLE IDENTIFICATION NUMBER - DESCRIPTION	Intro.-9
VEHICLE SAFETY CERTIFICATION LABEL - DESCRIPTION	Intro.-10
VEHICLE SPEED SENSOR, DESCRIPTION	21-41
VEHICLE THEFT SECURITY - DESCRIPTION	8Q-1
VEHICLE THEFT SECURITY - OPERATION	8Q-1
VEHICLE THEFT SECURITY SYSTEM - DIAGNOSIS AND TESTING	8Q-3
VENT TUBE - INSTALLATION, FUEL TANK	14-12
VENT TUBE - REMOVAL, FUEL TANK	14-12
VERIFICATION - ENGINE TIMING	9-218
VERIFICATION - STANDARD PROCEDURE, VALVE TIMING	9-64
VERIFICATION AND ADJUSTMENT, ADJUSTMENTS - BRAKE/ TRANSMISSION SHIFT INTERLOCK CABLE	21-221
VIBRATION - DIAGNOSIS AND TESTING, TIRE AND WHEEL	22-1
VIBRATION DAMPER - INSTALLATION	9-116, 9-199,9-50
VIBRATION DAMPER - REMOVAL	9-115,9-199, 9-49
VISOR - INSTALLATION, SUN	23-90
VISOR - REMOVAL, SUN	23-90
VISOR SUPPORT - INSTALLATION, SUN	23-91
VISOR SUPPORT - REMOVAL, SUN	23-91
VOLT SUPPLY - PCM OUTPUT - OPERATION, 5	8E-10
VOLTAGE DROP - STANDARD PROCEDURE, TESTING FOR A	8W-01-10
VOLTAGE POTENTIAL - STANDARD PROCEDURE, TESTING OF	8W-01-9
VOLTAGE REGULATOR - DESCRIPTION	8F-23
VOLTAGE REGULATOR - OPERATION	8F-23
VOLTAGE TEST - STANDARD PROCEDURE, OPEN-CIRCUIT	8F-10
VOLUME CHECK - STANDARD PROCEDURE, OIL PUMP	21-214
VTSS/SKIS INDICATOR LAMP - DESCRIPTION	8Q-5
VTSS/SKIS INDICATOR LAMP - OPERATION	8Q-5
WARNING - SAFETY PRECAUTIONS AND WARNINGS	23-1
WARNING - WARNINGS	8O-2
WARNING - WARNINGS AND CAUTIONS	2-32
WARNING - WINDSHIELD SAFETY PRECAUTIONS	23-118
WARNING, BRAKES - BASE	5-2
WARNING, COLUMN	19-11
WARNING, FRONT SUSPENSION	2-4
WARNING, HEATING & AIR CONDITIONING	24-1
WARNING LAMPS - INSTALLATION, CLUSTER ILLUMINATION	8L-28
WARNING LAMPS - REMOVAL, CLUSTER ILLUMINATION	8L-28
WARNING, STEERING	19-1
WARNING SWITCH - DESCRIPTION, HAZARD	8L-14
WARNING SWITCH - OPERATION, HAZARD	8L-14
WARNINGS AND CAUTIONS, WARNING	2-32
WARNINGS, GENERAL	8W-01-7
WARNINGS, WARNING	8O-2
WARNINGS, WARNING - SAFETY PRECAUTIONS	23-1
WASHER NOZZLE - INSTALLATION	8R-3
WASHER NOZZLE - REMOVAL	8R-3
WASHER RESERVOIR - INSTALLATION	8R-4
WASHER RESERVOIR - REMOVAL	8R-3
WASHER RESERVOIR PUMP - INSTALLATION	8R-4
WASHER RESERVOIR PUMP - REMOVAL	8R-4
WASHERS - DIAGNOSIS AND TESTING, WINDSHIELD	8R-3
WATER LEAKS - DIAGNOSIS AND TESTING	23-1
WATER PUMP - DIAGNOSIS AND TESTING	7-42
WATERSHIELD - INSTALLATION	23-44,23-51
WATERSHIELD - REMOVAL	23-44,23-51
WEAR INDICATORS - DIAGNOSIS AND TESTING, TREAD	22-10
WEAR PATTERNS - DIAGNOSIS AND TESTING, TIRE	22-9
WEATHERSTRIP - INSTALLATION, DECKLID OPENING	23-135
WEATHERSTRIP - INSTALLATION, DOOR INNER BELT	23-136
WEATHERSTRIP - INSTALLATION, DRIP RAIL	23-137
WEATHERSTRIP - INSTALLATION, FRONT & REAR DOOR OPENING	23-137
WEATHERSTRIP - INSTALLATION, FRONT DOOR GLASS RUN	23-138
WEATHERSTRIP - INSTALLATION, FRONT DOOR INNER BELT	23-138
WEATHERSTRIP - INSTALLATION, HEADER / A-PILLAR	23-139
WEATHERSTRIP - INSTALLATION, OUTER DOOR BELT	23-140
WEATHERSTRIP - INSTALLATION, QUARTER PANEL	23-141
WEATHERSTRIP - INSTALLATION, REAR DOOR GLASS RUN	23-141
WEATHERSTRIP - INSTALLATION, REAR DOOR INNER BELT	23-142
WEATHERSTRIP - INSTALLATION, SECONDARY SILL	23-143
WEATHERSTRIP - INSTALLATION, SIDE RAIL	23-144
WEATHERSTRIP - REMOVAL, DECKLID OPENING	23-135
WEATHERSTRIP - REMOVAL, DOOR INNER BELT	23-136
WEATHERSTRIP - REMOVAL, DRIP RAIL	23-136
WEATHERSTRIP - REMOVAL, FRONT & REAR DOOR OPENING	23-137
WEATHERSTRIP - REMOVAL, FRONT DOOR GLASS RUN	23-137
WEATHERSTRIP - REMOVAL, FRONT DOOR INNER BELT	23-138
WEATHERSTRIP - REMOVAL, HEADER / A-PILLAR	23-139
WEATHERSTRIP - REMOVAL, OUTER DOOR BELT	23-140
WEATHERSTRIP - REMOVAL, QUARTER PANEL	23-140
WEATHERSTRIP - REMOVAL, REAR DOOR GLASS RUN	23-141
WEATHERSTRIP - REMOVAL, REAR DOOR INNER BELT	23-142
WEATHERSTRIP - REMOVAL, SECONDARY SILL	23-143
WEATHERSTRIP - REMOVAL, SIDE RAIL	23-143
WEATHERSTRIP RETAINER AND MOLDING - INSTALLATION, A-PILLAR	23-135
WEATHERSTRIP RETAINER AND MOLDING - REMOVAL, A-PILLAR	23-135
WEATHERSTRIP RETAINER/MOLING - INSTALLATION, HEADER	23-140
WEATHERSTRIP RETAINER/MOLING - REMOVAL, HEADER	23-140
WEATHERSTRIP/MOLDING - INSTALLATION, QUARTER PANEL OUTER BELT	23-141
WEATHERSTRIP/MOLDING - REMOVAL, QUARTER PANEL OUTER BELT	23-141
WELD LOCATIONS - JR-27 AND JR-41 - SPECIFICATIONS	23-206
WELD LOCATIONS - JR-27 ONLY - SPECIFICATIONS	23-238
WELD LOCATIONS - JR-41 ONLY - SPECIFICATIONS	23-257
WELT - INSTALLATION, DOOR OPENING TRIM	23-136
WELT - REMOVAL, DOOR OPENING TRIM	23-136
WHEEL - INSPECTION, TONE	5-58
WHEEL - INSTALLATION, STEERING	19-20
WHEEL - REMOVAL, STEERING	19-19
WHEEL ALIGNMENT - DESCRIPTION	2-52
WHEEL ALIGNMENT - STANDARD PROCEDURE	2-58
WHEEL ALIGNMENT, SPECIFICATIONS	2-61
WHEEL ASSEMBLY - INSTALLATION, TIRE	22-7
WHEEL ASSEMBLY - REMOVAL, TIRE	22-7
WHEEL BALANCE - STANDARD PROCEDURE, TIRE	22-5
WHEEL CARE - CLEANING, ALUMINUM	22-12
WHEEL CYLINDER - INSTALLATION	5-38
WHEEL CYLINDER - REMOVAL	5-38
WHEEL INSPECTION - DIAGNOSIS AND TESTING	22-12
WHEEL MATCH MOUNTING - STANDARD PROCEDURE, TIRE	22-6
WHEEL MOUNTING STUDS - FRONT - INSTALLATION	22-13
WHEEL MOUNTING STUDS - FRONT - REMOVAL	22-13
WHEEL MOUNTING STUDS - REAR - INSTALLATION	22-14
WHEEL MOUNTING STUDS - REAR - REMOVAL	22-14
WHEEL ROTATION - STANDARD PROCEDURE, TIRE	22-7
WHEEL RUNOUT, SPECIFICATIONS - TONE	5-54
WHEEL, SPECIFICATIONS	22-13
WHEEL SPEED SENSOR - INSTALLATION, FRONT	5-55
WHEEL SPEED SENSOR - REMOVAL, FRONT	5-54
WHEEL SPEED SENSOR AIR GAP, SPECIFICATIONS	5-54
WHEEL VIBRATION - DIAGNOSIS AND TESTING, TIRE	22-1
WHEELHOUSE SPLASH SHIELD - INSTALLATION, LEFT FRONT	23-57
WHEELHOUSE SPLASH SHIELD - INSTALLATION, REAR	23-58
WHEELHOUSE SPLASH SHIELD - INSTALLATION, RIGHT FRONT	23-58
WHEELHOUSE SPLASH SHIELD - REMOVAL, LEFT FRONT	23-57
WHEELHOUSE SPLASH SHIELD - REMOVAL, REAR	23-58
WHEELHOUSE SPLASH SHIELD - REMOVAL, RIGHT FRONT	23-58
WHEELS - DESCRIPTION	22-12
WIND DEFLECTOR - INSTALLATION	23-132
WIND DEFLECTOR - REMOVAL	23-132
WIND NOISE - DIAGNOSIS AND TESTING	23-2
WINDOW - INSTALLATION, CONVERTIBLE TOP REAR	23-21
WINDOW - REMOVAL, CONVERTIBLE TOP REAR	23-20
WINDOW DEFOGGER GRID LINE REPAIR - STANDARD PROCEDURE, REAR	8G-4
WINDOW DEFOGGER GRID LINES - DIAGNOSIS AND TESTING, REAR	8G-4
WINDOW DEFOGGER RELAY - DESCRIPTION, REAR	8G-2
WINDOW DEFOGGER RELAY - DIAGNOSIS AND TESTING, REAR	8G-3
WINDOW DEFOGGER RELAY - INSTALLATION, REAR	8G-3
WINDOW DEFOGGER RELAY - OPERATION, REAR	8G-2
WINDOW DEFOGGER RELAY - REMOVAL, REAR	8G-3
WINDOW DEFOGGER SWITCH - DESCRIPTION, REAR	8G-3
WINDOW DEFOGGER SWITCH - DIAGNOSIS AND TESTING, REAR	8G-3
WINDOW DEFOGGER SWITCH - OPERATION, REAR	8G-3
WINDOW DROP RELAY - INSTALLATION	8N-18
WINDOW DROP RELAY - REMOVAL	8N-18
WINDOW MOTOR - DIAGNOSIS AND TESTING	8N-18
WINDOW MOTOR - INSTALLATION	8N-18
WINDOW MOTOR - REMOVAL	8N-18
WINDOW REGULATOR - INSTALLATION	23-50
WINDOW REGULATOR - REMOVAL	23-50
WINDOW SWITCH - DIAGNOSIS AND TESTING	8N-19
WINDOW SWITCH - INSTALLATION	8N-20
WINDOW SWITCH - REMOVAL	8N-20
WINDOWS - DESCRIPTION, POWER	8N-17
WINDOWS - DIAGNOSIS AND TESTING, POWER	8N-17
WINDOWS - OPERATION, POWER	8N-17
WINDSHIELD - DESCRIPTION	23-118

Description	Group-Page
WINDSHIELD HEADER DAMPER - INSTALLATION	23-92
WINDSHIELD HEADER DAMPER - REMOVAL	23-92
WINDSHIELD SAFETY PRECAUTIONS, WARNING	23-118
WINDSHIELD WASHERS - DIAGNOSIS AND TESTING	8R-3
WIPER ARMS - ADJUSTMENTS	8R-4
WIPER ARMS - INSTALLATION	8R-4
WIPER ARMS - REMOVAL	8R-4
WIPER BLADES - CLEANING	8R-5
WIPER BLADES - INSTALLATION	8R-5
WIPER BLADES - REMOVAL	8R-5
WIPER LINKAGE - INSTALLATION	8R-5
WIPER LINKAGE - REMOVAL	8R-5
WIPER MOTOR - INSTALLATION	8R-6
WIPER MOTOR - REMOVAL	8R-5
WIPER MOTOR ASSEMBLY - INSTALLATION	8R-7
WIPER MOTOR ASSEMBLY - REMOVAL	8R-7
WIPERS/WASHERS - DESCRIPTION	8R-1
WIPERS/WASHERS - OPERATION	8R-2
WIRE SPLICING - STANDARD PROCEDURE	8W-01-15
WIRING DIAGRAMS - DESCRIPTION, HOW TO USE	8W-01-1
WIRING HARNESS - DIAGNOSIS AND TESTING	8W-01-7
WIRING/TERMINAL, SPECIAL TOOLS	8W-01-10
WORN THREADS - STANDARD PROCEDURE, REPAIR OF DAMAGED OR	9-10,9-151,9-79

SERVICE MANUAL COMMENTS

What errors(s) have you found?

_____

_____

_____

_____

In order for us to assist you, please include as much details as possible when reporting an error

Comments / Suggestions

_____

_____

_____

_____

☐ **Dealership Technician**
Dealer Code: _____

Retail Customer ☐

Manual Title, Year, Number and Page: _____

_____

Your Name: _____

Address: _____

_____

_____

All comments become property of DaimlerChrysler Corporation and may be used without compensation.

Fold Here

Place
Stamp
Here

DaimlerChrysler Corporation
Attn. Publications Dept.
CIMS 486-02-70
800 Chrysler Drive
Auburn Hills, MI 48326-2757

Fold Here